REV.	ECN NO./DESCRIPTION	DATE
7	N100290	06/16'11
8	N110337	07/07'11
8A	R110779	01/10'12

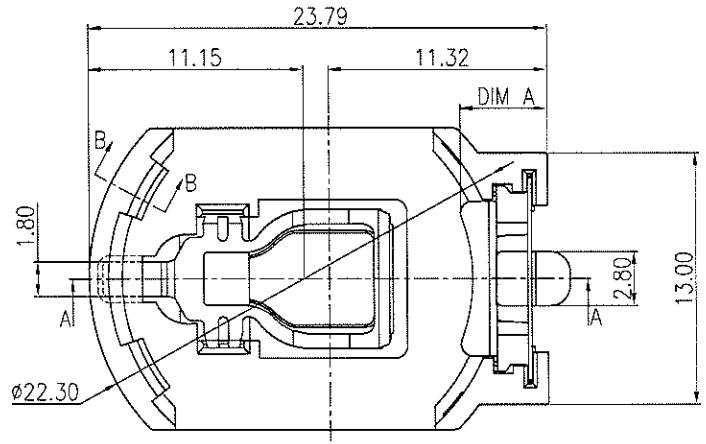

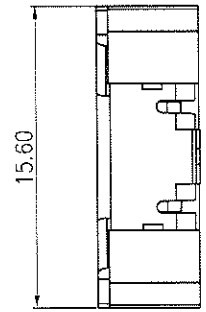

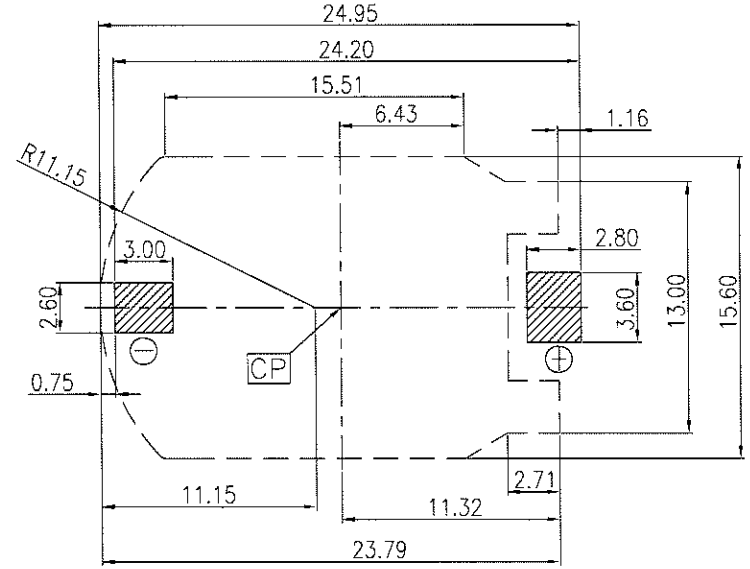

RECOMMENDED PCB LAYOUT (TOP VIEW)

(PCB THICKNESS:T=1.60mm)(TOLERANCE:±0.05)

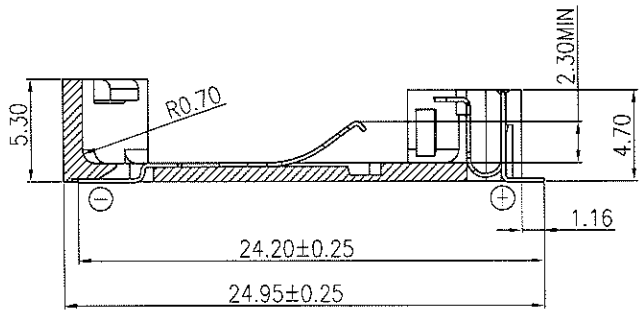

SECTION A–A

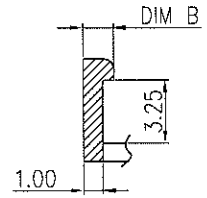

SECTION B–B

NOTES:
1.DIMENSIONS ARE IN MILLIMETER
2.MATERIAL SPECIFICATION
1–1.HOUSING:SEE TABLE;UL94V–0.
1–2.CONTACT:PHOSPHOR BRONZE(C5191).
3.FINISH:Au1u" PLATED;Ni50u" MIN. UNDERPLATING.
4.ELECTRICAL PERFORMANCE
LLCR:30mΩ MAX.
INSULATION RESISTANCE:1000MΩ MIN.
DIELECTRIC WITHSTANDING:1000V AC FOR 1MINUTE.
5.IR REFLOW:THE PEAK TERMPERTURE ON THE BOARD SHALL BE MAINTAINED 10SECONDS AT 260±5°C.
6.RoHS OR HALOGEN FREE COMPLIANT.

NO.	PART NO.	MATERIAL	DIM A	DIM B	PACKAGING SPEC.
2	CH7410-2032LF/TR	PPS+40%G.F; COFFEE(4975C) RoHS	4.16	1.60	TAPE&REEL
1	CH7410-2032LF		4.16	1.60	TRAY

GENERAL TOLERANCES UNLESS SPECIFIED .X± 0.35 X.°± 3° .XX± 0.25 .X°± 2° .XXX± 0.15 .XX°± 1°	PART NO. SEE TABLE	COMFORTABLE	
CUSTOMER DRAWING	APPROVED BY Jack_Fan	TITLE BATTERY HOLDER FOR CR2032	
	CHECKED BY Yusheng_Zhang	DWG NO. GAP-AAA-BAT-032	
SIZE: A4 / UNITS: MM[INCH]	DRAWN BY TANGHUI	SHEET 1 / 1 / SCALE 2:1	REV 8A