REV	ECR NO./DESCRIPTION	DATE
J	24234 RHW DIM "A"±.020 WAS ±.010	01/28/05

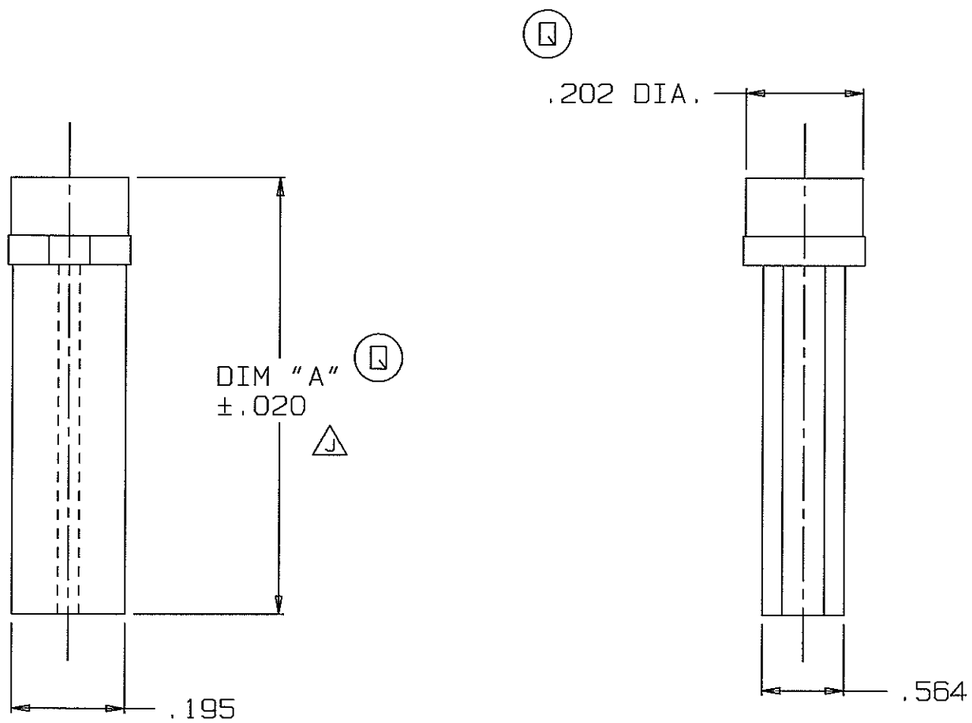

I.P. NUMBER	DIM "A"
00624200	.200
00624250	.250
00624300	.300
00624375	.375
00624400	.400
00624450	.450
00624606	.606
00624500	.500
00624625	.625
00624750	.750
00624850	.850
00624900	.900
00624001	1.000
CMD-XXX	.468

Q FOR INSPECTION USE ONLY
X SPC DOCUMENTATION REQ. (X R CHARTS)

DIST. V

NOTES:
1. ALL DIMENSIONS ARE IN INCHES.

DO NOT SCALE

THIS DWG IS THE PROPERTY OF CHICAGO MINIATURE LAMP INC. AND IS PROPRIETARY IN GENERAL AND IN DETAIL. IT SHALL NOT BE COPIED OR ITS CONTENTS REVEALED TO OUTSIDE PARTIES WITHOUT THE WRITTEN CONSENT OF CHICAGO MINIATURE LAMP INC.

PART NO. –
MODEL NO. –
MOLD NO.
MATERIAL:
FINISH:

TITLE: STANDARD SPACESETTER

CHICAGO MINIATURE LAMP INC.
147 CENTRAL AVE. HACKENSACK, NJ 07601

TOLERANCE UNLESS OTHERWISE SPECIFIED:
FRACTION ± 1/64
INCHES .xx ±.005 (0.13)
.xxx ±.005 (0.13)
ANGLE ± 1 deg.

DRAWN K. BARRETT
CHECKED RH 1/31/05
ENG. APPRV HGM

SCALE: 4 : 1
B13736 REV J

SHEET 1 OF 1

DWG NO.

ORIGINAL
WHEN RED