CT Series • Current Sensor for 50/60 Hz

Part Number	CT 1025
Customer	
Product Type	Current transformer

SCHEMATIC:

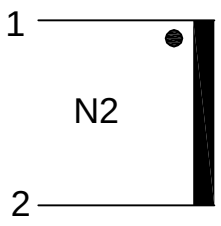

ELECTRICAL SPECIFICATION:

- Rated input current : 25Amps
- Primary to Secondary isolation : 2500VAC
- Operating frequency : 50 / 60Hz
- Turns ratio : 1:1000
- DCR : 48Ω
- Io @ Vrms = 3.65V : 566μArms
- Ratio correction factor (RCF*) : 1.020 @10% (Multiply current reading by this factor to compensate for transformer losses)
- Operating temperature range : -55°C to 120°C
- Flammability rating : UL 94V0

Volt/Amp at rated Ip for different loads			
100Ω	500Ω	2000Ω	5000Ω
0.10	0.47	1.06	1.31

LOAD TEST DETAILS:

Rated Ip=25A
R_L=100Ω/0.063W
Us=2.5V

MARKING INFORMATION:

AMGIS
YY/WW CT1025

Trafo Weight:

0.036Kg/pc

MECHANICAL DIMENSIONS:

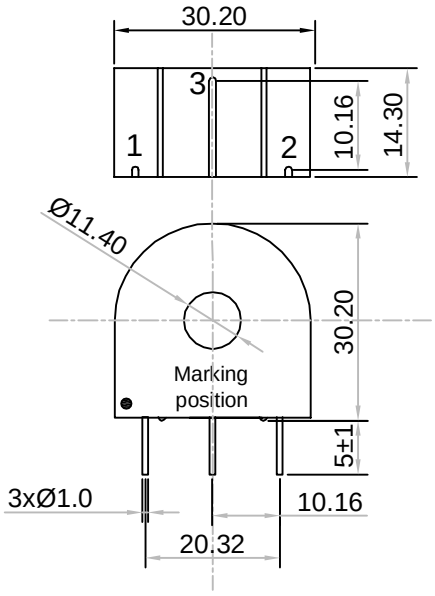

All dimensions are in mm
Linear dimensional tolerance ±0.2mm

AMGIS, LLC * 10830 Kinghurst Dr. Houston, TX 77099
Phone: 832-775-1319 * Fax: 281-933-9067* email: sales@amgistoroids.com
Toll Free: 877-762-6447 * www.amgistoroids.com