THIS DRAWING IS UNPUBLISHED. RELEASED FOR PUBLICATION 19
© COPYRIGHT 20 - ALL RIGHTS RESERVED.

LOC	DIST
AD	47

REVISIONS

P	LTR	DESCRIPTION	DATE	DWN	APVD
	J	REVISED PERECO-11-013132	13JUL2011	HMR	MH

2. PHOSPHOR BRONZE
3. LCP, UL94V-0
4. CONTACT MATING AREA MEETS THE PERFORMANCE REQUIREMENTS OF TE CONNECTIVITY PRODUCT SPECIFICATION 108-1957; BASED ON TELCORDIA GR-1217-CORE, APPLICATIONS IN UNCONTROLLED ENVIRONMENTS.
5. CONNECTOR MARKED WITH PART NUMBER AND DATE CODE
6. REFERENCE APPLICATION SPEC 114-13020 FOR RECOMMENDED PLATED THRU HOLE DIAMETER AND PLATING THICKNESSES
7. APPLICATION SEATING HEIGHT TO PRINTED CIRCUIT BOARD
8. DATUMS AND BASIC DIMENSIONS ESTABLISHED BY CUSTOMER
9. CONTACT AREA LUBRICATED WITH BELLCORE APPROVED LUBRICANT TECHNICAL REFERENCE: GR-1217-CORE, ISSUE 1, NOVEMBER 1995
10. HOLE DIAMETER SHOULD BE 3.10 WHEN USING FEED THROUGH GUIDE PIN P/N 120759 CLEARANCE FOR M3x0.5 THREAD

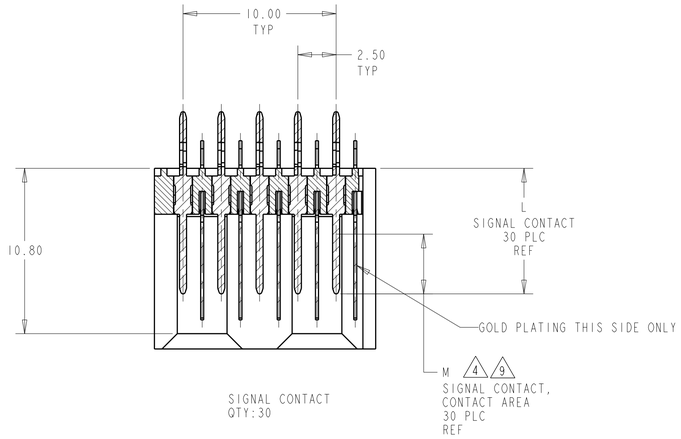

SECTION B-B

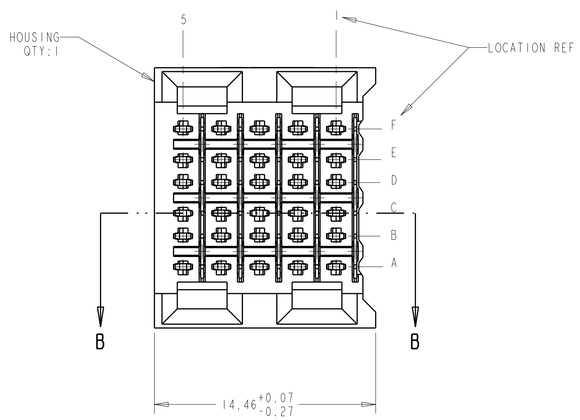

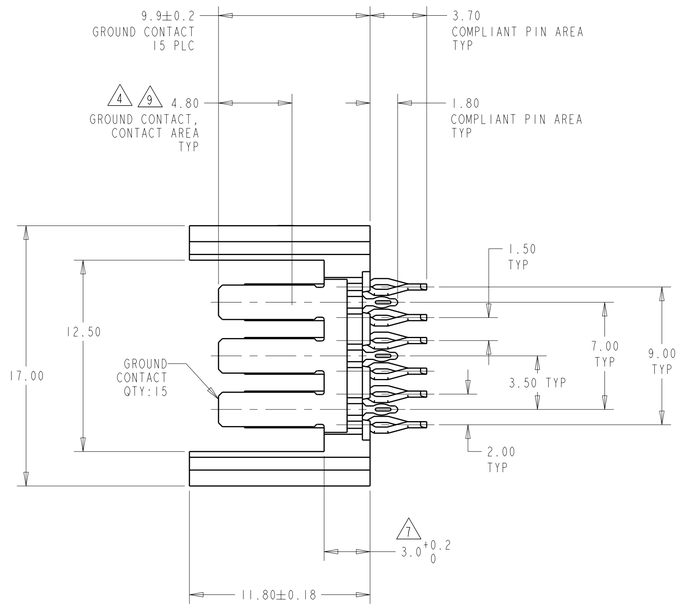

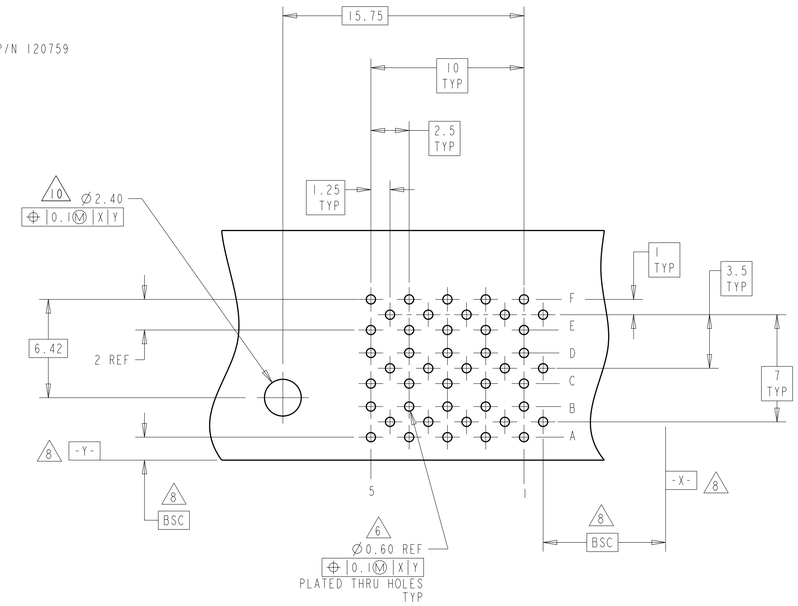

RECOMMENDED
PRINTED CIRCUIT BOARD
LAYOUT
COMPONENT SIDE OF PRINTED CIRCUIT BOARD

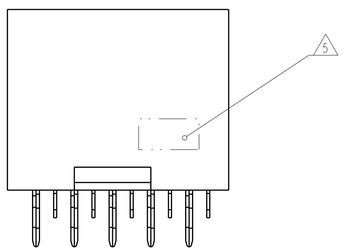

5.30	9.7	120677-2
3.90	8.2	120677-1
M	L	PART NUMBER

THIS DRAWING IS A CONTROLLED DOCUMENT.

DIMENSIONS: mm

TOLERANCES UNLESS OTHERWISE SPECIFIED:
0 PLC ±-
1 PLC ±-
2 PLC ±0.13
3 PLC ±0.05
4 PLC ±-
ANGLES ±-

MATERIAL
HOUSING: 3
CONTACTS: 2
FINISH -
SIGNAL CONTACT: 4

DWN H MOLL 5-20-99
CHK H ANDREWS 5-20-99
APVD H ANDREWS 5-20-99
PRODUCT SPEC -
APPLICATION SPEC -
WEIGHT -

TE Connectivity

HEADER ASSEMBLY, 30 POSITION, RIGHT HAND, 6 ROW, ZPACK HS3

SIZE A1 | CAGE CODE 00779 | DRAWING NO C-120677 | RESTRICTED TO

CUSTOMER DRAWING | SCALE 5:1 | SHEET 1 OF 1 | REV J

OBSOLETE
NOT the LATEST
REVISION