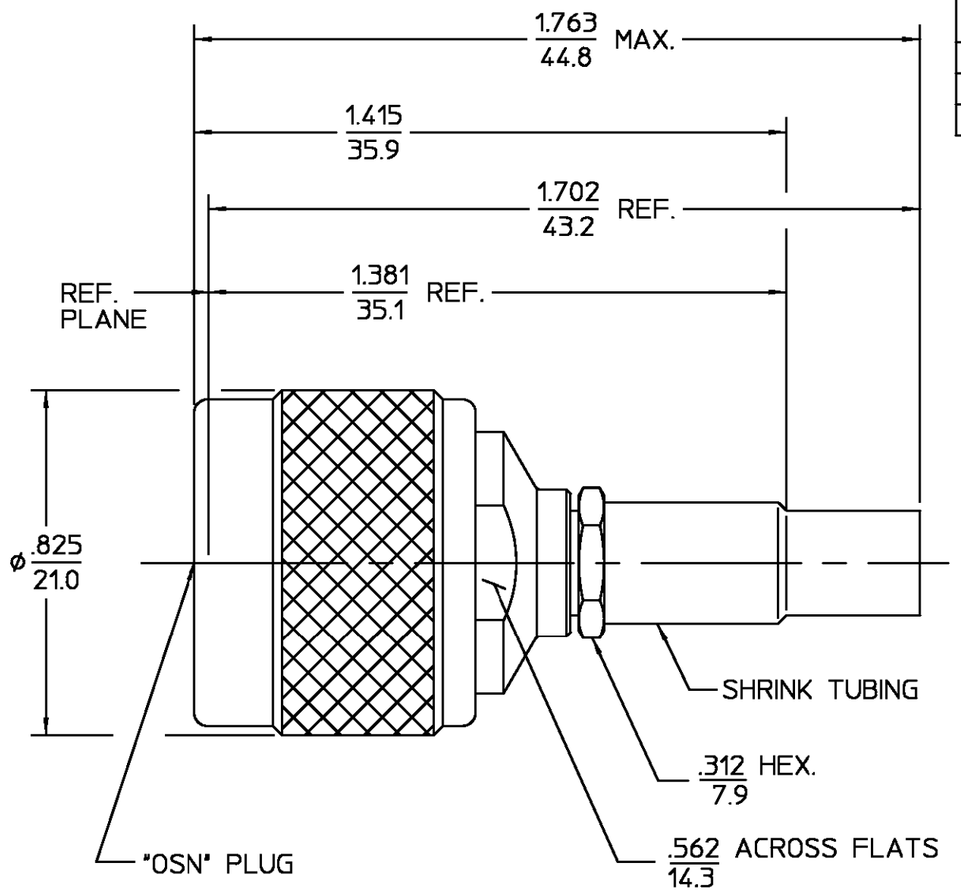


| DESIGNED FOR USE WITH RG-55/U, 142, 223, & 400 CABLES | |
|---|---|
| CABLE ENTRY DIAMETER MINIMUM | |
| FERRULE | .219 |
| SLEEVE | .122 |
| CONTACT | .042 |

REVISIONS

| REV | DESCRIPTION | DATE | APPROVED |
|---|---|---|---|
| $02_1$ | REVISED | 7/15/96 | 7/16/96 |
| B | PER EC 0U20-0692-00 | 9/25/01 | 9/25/01 |

| COMPONENT | MATERIAL | FINISH |
|---|---|---|
| HOUSING<br>CLAMP NUT<br>COUPLING NUT | BRASS PER ASTM-B-16, HALF HARD | NICKEL PLATE PER QQ-P-35 |
| DIELECTRIC | TFE FLUOROCARBON PER ASTM-D-1457 | N/A |
| CENTER CONTACT | BRASS PER ASTM-B-16, HALF HARD | GOLD PLATE PER MIL-G-45204 |
| RETAINING RING | PHOSPHOR BRONZE PER QQ-B-750, GRADE B2 | N/A |
| GASKET | SILICONE RUBBER PER ZZ-R-765 | N/A |
| SLEEVE | BRASS PER ASTM-B-16, HALF HARD | GOLD PLATE PER MIL-G-45204 |
| SHRINK TUBING | HEAT SHRINKABLE POLYOLEFIN COMPOUND MIL-I-23053/4 | N/A |
| FERRULE | COPPER OR BRASS ALLOY ROCKWELL F65 MAXIMUM | GOLD PLATE PER MIL-G-45204 |

NOTES:

1. CAPTURED CENTER CONTACT

.XXX = in
XX.X = mm (REF)

UNLESS OTHERWISE SPECIFIED DIMENSIONS ARE IN INCHES

| FRAC. | DEC. | ANGLES |
|---|---|---|
| ± 1/64 | ±.005 | ± 1° |

| | | DATE |
|---|---|---|
| DRAWN BY | T.M. | 11/15/82 |
| CHECKED BY | R.G. | 11/15/82 |
| APP'D BY | R.M.F. | 11/16/82 |

AMP

*AMP Incorporated*
140 Fourth Avenue
Waltham, MA 02451-7599

These drawings and specifications are the property of M/A COM Interconnect Div. and shall not be reproduced or copied or used in whole or in part as the basis for the manufacture or sale o f item(s) without written permission.

USE ASS'Y PROCEDURE

408-04892
NO. A.P. (30-051)

TITLE "OSN" STRAIGHT CABLE PLUG CRIMP ATTACHMENT

| SIZE | CODE IDENT NO. | | REV |
|---|---|---|---|
| B | 26805 | 3031-7341-10 | $02_1$ |
| SCALE 3:1 | | | SHEET 1 OF 1 |

CUSTOMER DRAWING

AMP PART # 1057243-1
SHEET 1 OF 1 REV B