DRAWING MADE IN THIRD ANGLE PROJECTION

THIS DRAWING IS UNPUBLISHED. RELEASED FOR PUBLICATION ,19 .

© COPYRIGHT 19 BY AMP INCORPORATED. ALL INTERNATIONAL RIGHTS RESERVED.

LOC	DIST	P	F
AD	25		

REVISIONS

ZONE	LTR	DESCRIPTION	DATE	APPD
	G	EC 0504-0052-96	6/27/97	CR

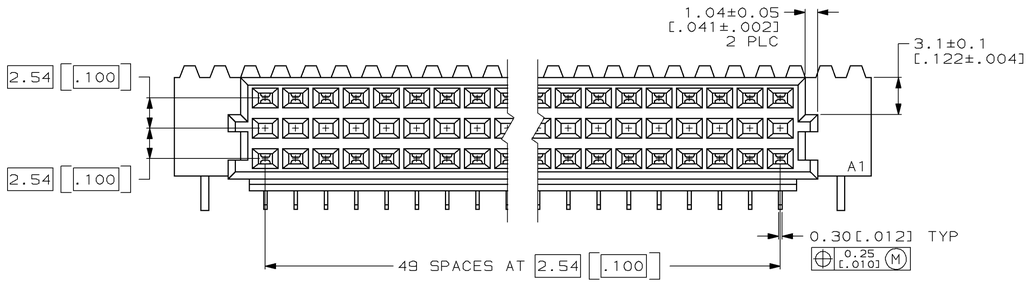

1. HOUSING MATERIAL: GLASS-FILLED POLYESTER. COLOR: GRAY.
2. CONTACT MATERIAL: PHOSPHOR BRONZE.
3. CONTACT FINISH: DIN 41612 CLASS 2 ON CONTACT AREA. TIN-LEAD ON POSTS.
4. RECOMMENDED HOLE SIZE FOR MANUAL APPLICATION OF CONNECTOR ONTO PC BOARD.
5. PART NUMBER, DATE CODE IDENTIFICATION, CSA LOGO HOT-STAMPED THIS APPROXIMATE AREA.
6. CONTACT POINT.
7. HOT-STAMPING ON THIS SIDE.

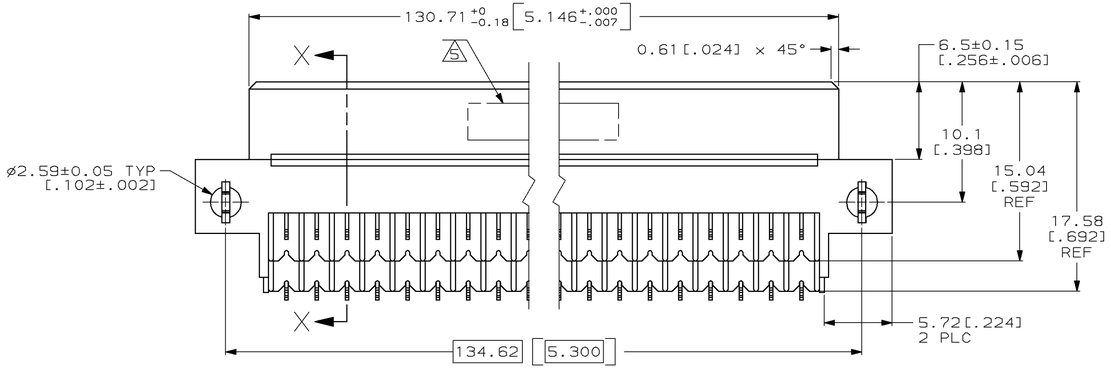

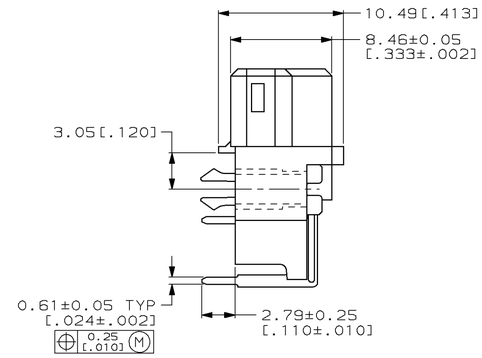

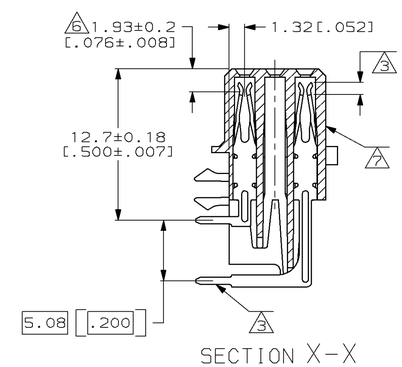

SECTION X-X

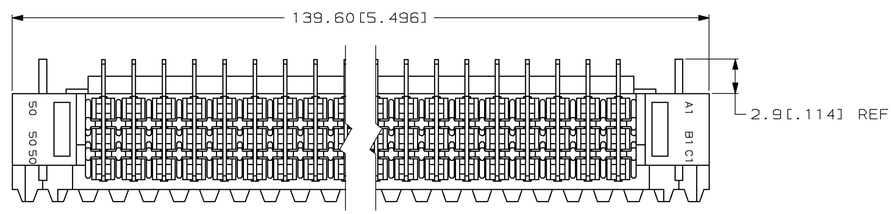

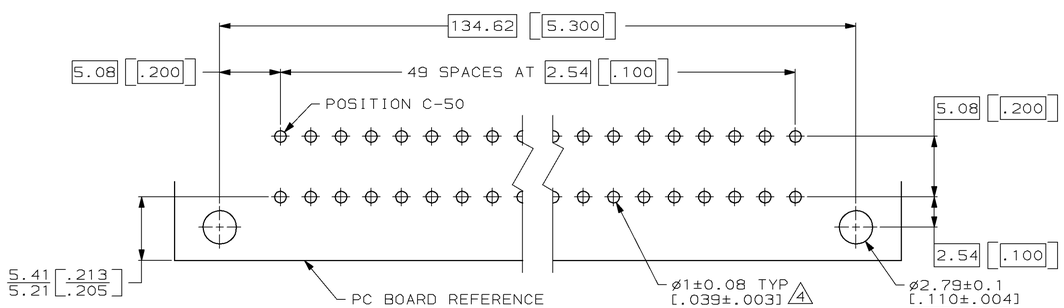

PC BOARD LAYOUT

RECOMMENDED PC BOARD THICKNESS 1.57[.062]

	3	1 THRU 50	X	–	X	100	536016-5
SUPERSEDED BY 536016-5	3	1 THRU 50	X	–	X	100	536016-4
POSITIONS LOADED			C	B	A	NO. OF LOADED POSITION	ASSY PART NUMBER
			ROWS LOADED				

DO NOT SCALE PRINT. UNLESS SPECIFIED DIMENSIONS IN mm [INCHES] TOLERANCES ON : 1 PLC DEC ± – 2 PLC DEC ± 0.13[.005] ANGLES ± –	DR L. BRINER 10/14/91	AMP INCORPORATED Harrisburg, Pa. 17105
	CHK R. PATTERSON 10/23/92	
	APPD R. PATTERSON 10/23/92	NAME RECEPTACLE ASSEMBLY, EUROCARD, TYPE "R" WITH BOARD-LOCKS
MATERIAL HSG 1 CONT 2	APPD D.C. RUBENDALL 10/26/92	
	PRODUCT SPEC –	
FINISH CONT 3	APPLICATION SPEC –	SIZE D / CAGE CODE 00779 / DRAWING NO 536016
	WEIGHT –	SCALE 4:1 / SHEET 1 OF 1

CUSTOMER DRAWING

AMP 1756-3 REV 6-89

01-JUL-97 11:08:47 amp20443 /home/ssrv161a/dsk02/dept1725/amp20443/edmmod