MATERIAL NO.	ENGINEERING NO.	DESCRIPTION
1300390382	DND100	MALE STANDARD TERMINATOR WITH RESISTOR
1300390125	DND101	MALE TERMINATOR WITH JUMPERS

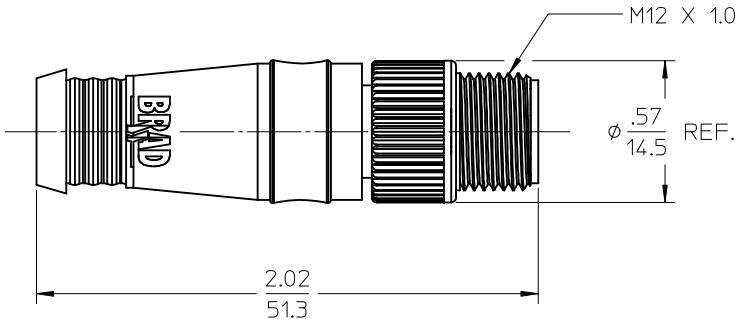

NOTES:
1. MATERIAL: SEE TABLE
2. FINISHES: SEE TABLE
3. MATES WITH: FEMALE MICRO-CHANGE 5 POLE RECEPTACLE
4. ELECTRICAL SPECIFICATIONS:
   VOLTAGE RATING: 30V
   CURRENT RATING: 4.0 AMPS
5. ASSEMBLY IS RoHS COMPLIANT

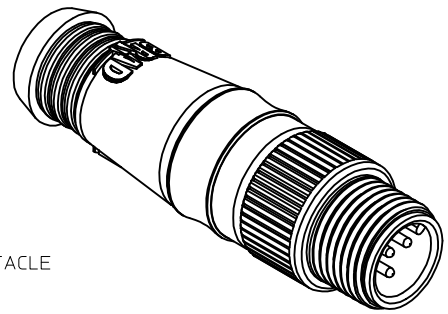

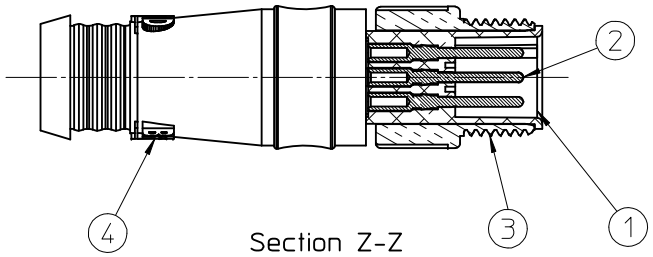

Section Z-Z

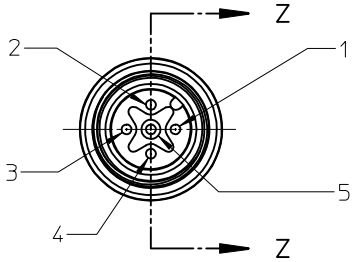

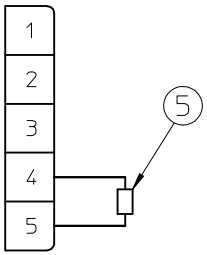

WIRING DIAGRAM
(1300390382)

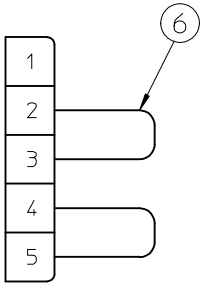

WIRING DIAGRAM
(1300390125)

ITEM	QTY.	DESCRIPTION	MATERIAL	FINISH
6	2	JUMPER WIRE, 22 AWG	PVC INSULATION	
5	1	RESISTOR, 121 OHM, 1/4 WATT, ±1%	CARBON OR METAL FILM	
4	1	OVERMOLD	GRAY	PVC
3	1	COUPLING NUT, MALE THREAD	ZINC	BLACK
2	5	CONTACT PIN	Cu ALLOY	GOLD
1	1	INSERT, 5 POLE	NYLON	BLACK

RELEASED
EC NO: WNA2010-0141
DRWN:R.STONE 2009/08/28
CH'KD:B.WOODMAN 2009/08/28
APPR: JFMURPHY 2009/08/31
DESCRIPTION
REV A

QUALITY SYMBOLS
▼=0
Ⓒ=0

GENERAL TOLERANCES (UNLESS SPECIFIED)	mm	INCH
4 PLACES	± ---	± ---
3 PLACES	± ---	± ---
2 PLACES	± ---	± .01
1 PLACE	± 0.3	± ---
ANGULAR ±1/2°		

DRAFT WHERE APPLICABLE MUST REMAIN WITHIN DIMENSIONS

DIMENSION STYLE: IN/MM
SCALE: 2:1
DESIGN UNITS: INCH
THIRD ANGLE PROJECTION

DRAWN BY: R.STONE DATE: 2009/08/27
CHECKED BY: B.WOODMAN DATE: 2009/08/28
APPROVED BY: JFMURPHY DATE: 2009/08/28

TITLE: MICRO-CHANGE TERMINATOR MALE, 5 POLE DEVICE NET

molex MOLEX INCORPORATED

MATERIAL NO.: SEE CHART
DOCUMENT NO.: SD-130039-011
SHEET NO.: 1 OF 1
SIZE: B

THIS DRAWING CONTAINS INFORMATION THAT IS PROPRIETARY TO MOLEX INCORPORATED AND SHOULD NOT BE USED WITHOUT WRITTEN PERMISSION