wieland

Electrical
Connections

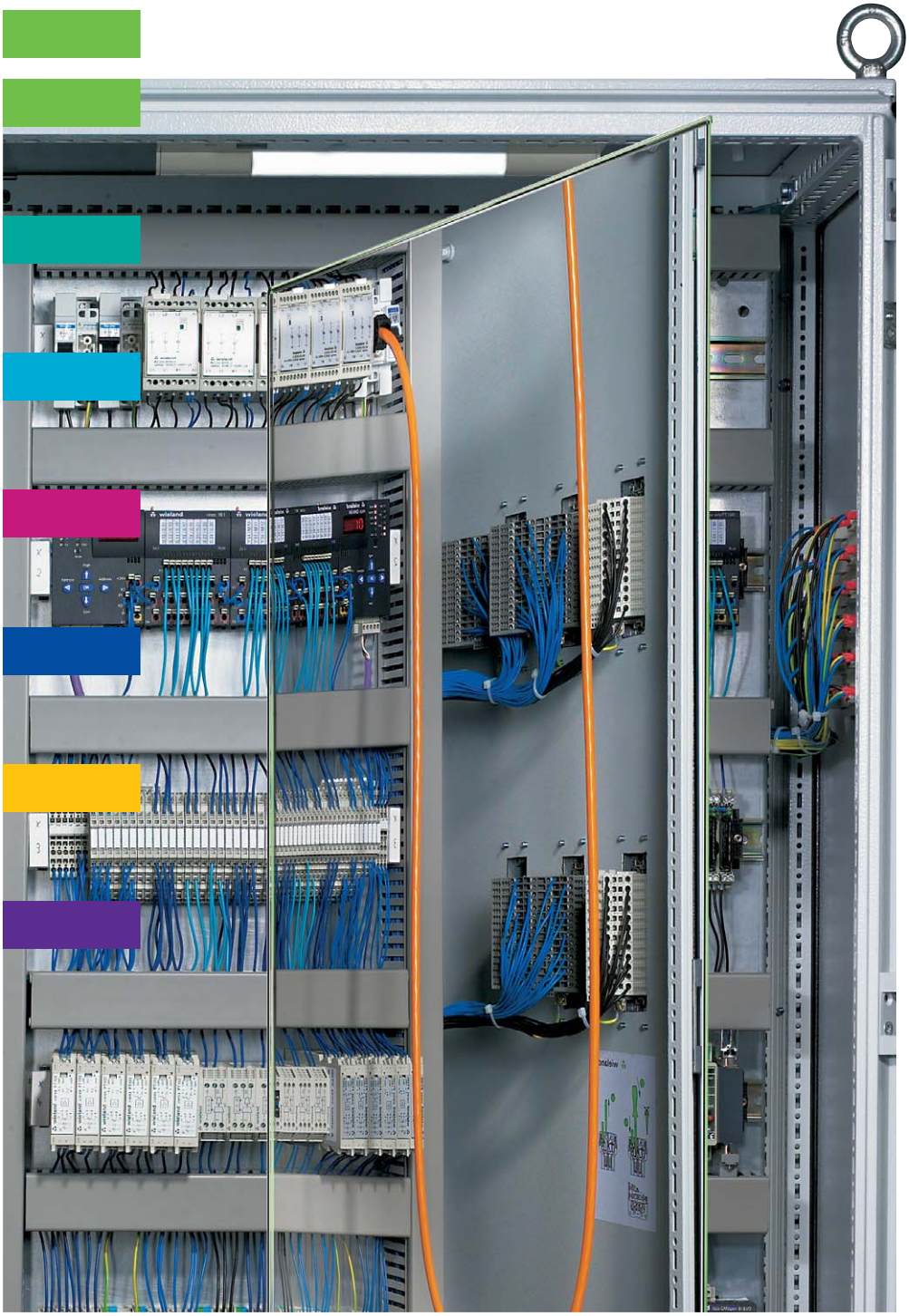

Best Connections.

0105.2 F 01/02

wieland

For more than 90 years, Wieland Electric has offered customers the broad product range, worldwide approvals, superior designs, unsurpassed quality, and custom development capabilites necessary to guarantee the most cost-effective, space-saving and time-saving interconnect solutions. More than just terminal blocks, Wieland's total offering includes products from PC board connectors to advanced electronic modules; I/O systems to DIN rail power supplies; and rectangular connectors to hazardous location components.
And more than just products, Wieland has the design support, application assistance and custom solutions necessary to meet your most challenging interconnect requirements.

The cornerstone of all Wieland products is the superior design and our philosophy of continuous improvement through innovation. Our high degree of vertical integration and attention to product detail enable our products not only to perform above established standards, but also to minimize the purchase cost as well as associated installation and maintenance costs.

Best by design, best product offering and best support.

Wieland .... Best Connections.

Wieland Products and Industries Supported	Machine Manufacturers	Petrochemical	Heating, Ventalation & Air Conditioning	Process Controls & Instrumentation	Transportation	Water Treatment & Utilities	Telecommunications	Computers & Networking	Packaging & Material Handling	Automotive & Robotics
selos, fasis, taris DIN rail Mountable Terminal Blocks	✓	✓	✓	✓	✓	✓			✓	✓
flare Electro-Mechanical & Solid State Relay Modules	✓	✓	✓	✓	✓	✓			✓	✓
Signal Conditioning & Surge Suppression Modules	✓	✓	✓	✓	✓	✓		✓	✓	✓
ricos Remote Interface Communication System	✓	✓	✓		✓	✓		✓	✓	✓
wipos DIN Rail Mounted Power Supplies	✓		✓	✓	✓	✓			✓	✓
Standard & Custom Interface Modules	✓	✓	✓	✓	✓	✓	✓	✓	✓	✓
revos Industrial Multipole Connectors	✓	✓		✓	✓	✓		✓	✓	✓
Wire Management Products	✓	✓	✓	✓	✓	✓	✓	✓	✓	✓
gesis ST Compact Connector System	✓		✓	✓	✓			✓	✓	✓
wiecon Pluggable PC Board Terminal Strips		✓	✓	✓	✓		✓	✓		
wiecon Modular PC Board Terminal Strips		✓	✓	✓			✓	✓		
europa & Compact Panel Mounted Terminal Strips	✓	✓	✓	✓	✓	✓			✓	✓

U.S.A. • 49 International Road • Burgaw, NC 28425 • Phone (910) 259-5050 • Fax (910) 259-3691
Canada • 2889 Brighton Road • Oakville, Ontario L6H 6C9 • Phone (905) 829-8414 • Fax (905) 829-8413

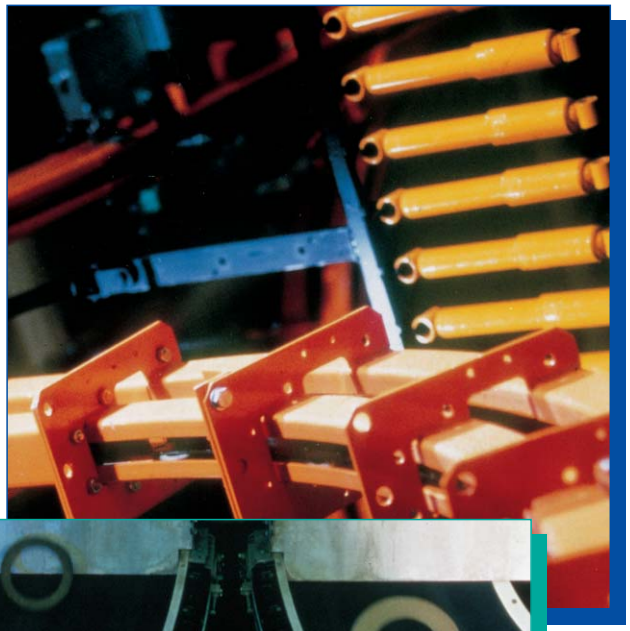

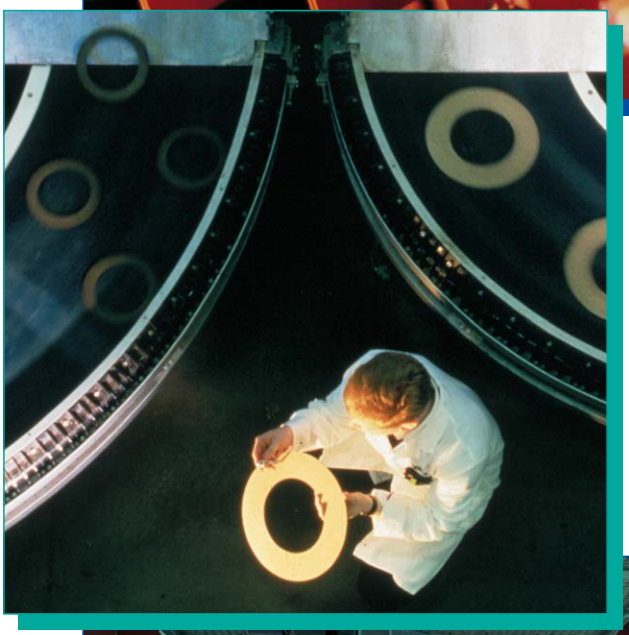

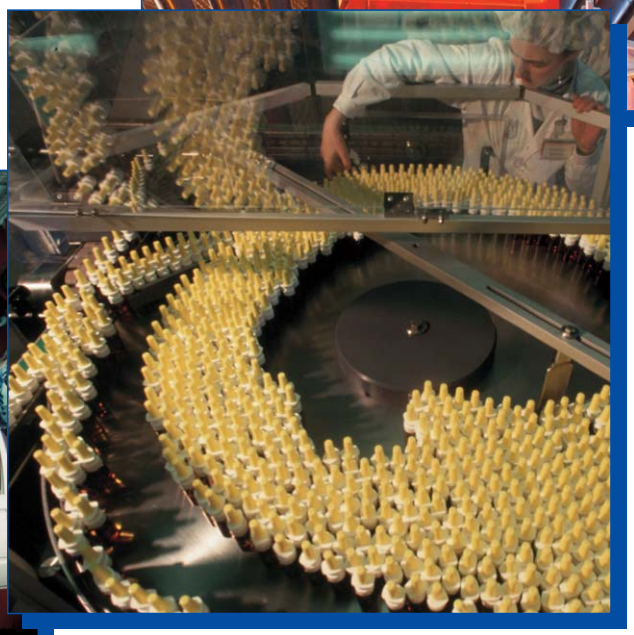

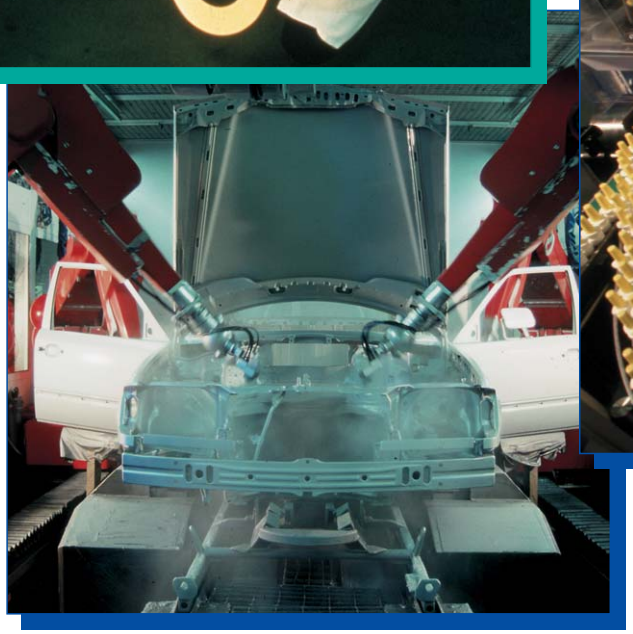

wieland

....serving industrial, manufacturing, and process control markets worldwide !

Wieland special products and custom capabilities provide unique solutions for your specific application needs. **For more information** on how **Wieland** products can connect you to your future designs, call ***1-800-wieland*** or visit us at

www.wielandinc.com

Best Connections.

fasis DIN Rail Terminal Blocks – Spring Clamp Connection

selos DIN Rail Terminal Blocks – Screw Clamp Connection

taris DIN Rail Terminal Blocks – IDC Connection

appliance TERMINALS

wiecon PC Board Connectors

electronics

gesis® Connector Systems

revos Industrial Multipole connectors

facts & DATA

contents

DIN rail terminal blocks for TS35, type WKF
Multi-conductor terminal blocks
Application specific terminal blocks
Micro modular feed through blocks for TS15, type WKFM
Terminal blocks for electrical installations, type WKIF

DIN rail terminal blocks for electrical installations, type WKI
DIN rail terminal blocks with U foot, type WK/WKN
Feed through blocks for large cross section conductors
Multi-conductor terminal blocks
Application specific terminal blocks
DIN rail terminal blocks with extruded clamping body for TS35, type 9700A
TOP connector system
Busbar components
Stacking coordinates

DIN rail terminal blocks for TS35, type WKC
Multi-conductor terminal blocks with U foot
Application specific terminal blocks
Hybrid terminal blocks

Terminal strips
Lighting and appliance terminals
Plug/screw terminal strips
Terminal boxes
Divisible terminal strips
Mains connectors for appliance wiring

Pluggable PC board connectors, Insulated headers and pin strip headers, two piece design
DIN rail terminal blocks with pluggable connection for PC board connectors
Pluggable PC board connectors, edge card
PC board connectors
PC board connectors, 2-tier version
PC board connectors, 3-tier version
PC board connectors, 4-tier version
Special-purpose connectors, RAST 5 connection style
Feed through modules for control cabinets

Distributed I/O modules
Relay modules
Analog signal conditioning
Wieland power supply
Wieland Electronic modules
Wieland interface system
Empty housings for electronic components

Separate catalog – please order your copy at:

www.gesis.com
info@wielandinc.com

The pluggable electrical system

Standard – 400 V, 500 V, 400/690 V, cable to cable coupling, EMC etc.
Modular system
3 to 8 pole connectors
High-density connectors
24 pole connectors
Data cable feed through, D-Sub connections, bus system connections, fiber optic
Pg thread cable glands
High amperage connectors
Motor starter components

Pg threads are still available

Preparation of conductor ends with
– ferrules
– tools
Technical explanations
Tables
Approvals

Table of contents, structured as per
– type description
– part number
General terms of sale and delivery

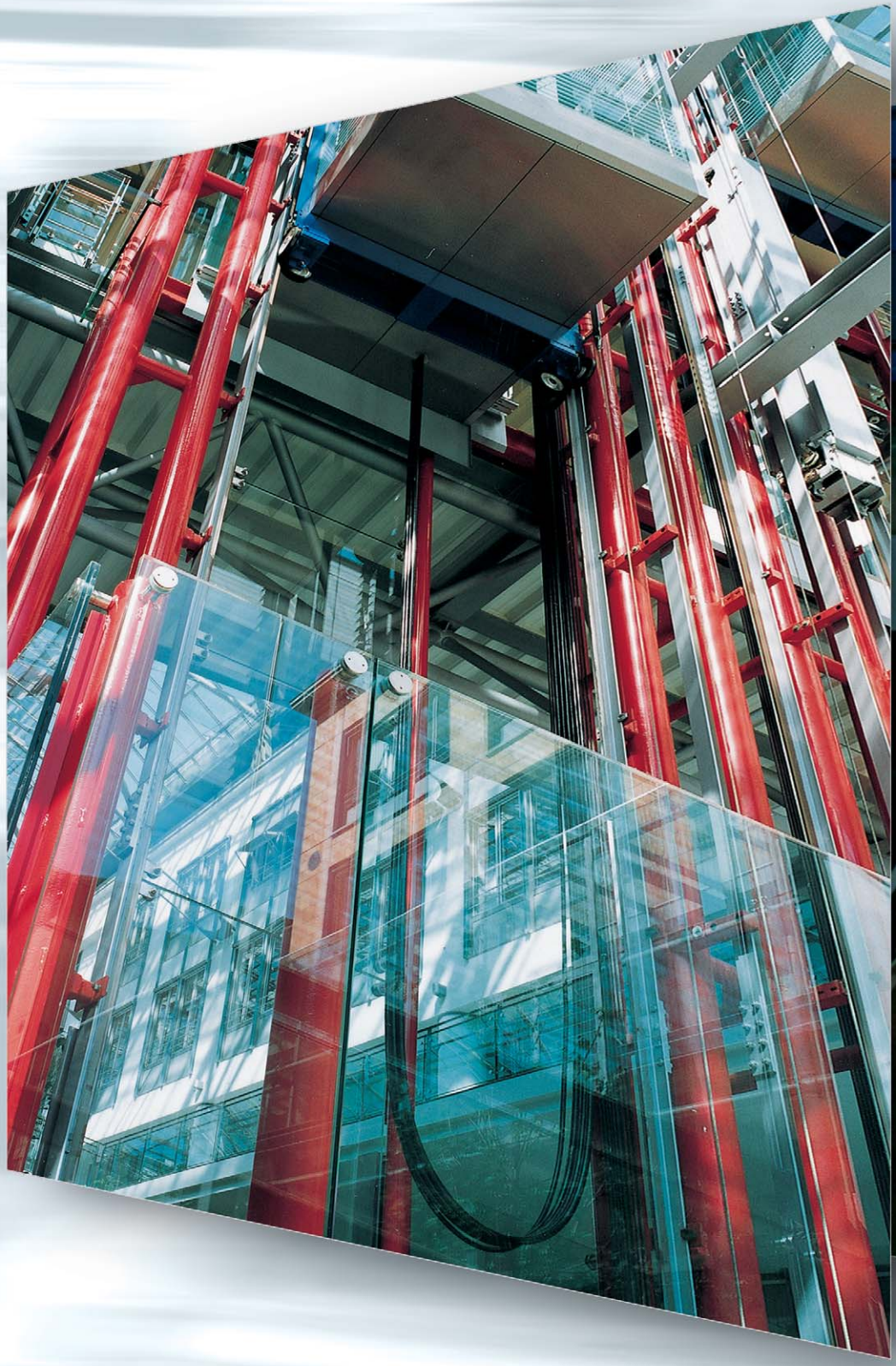

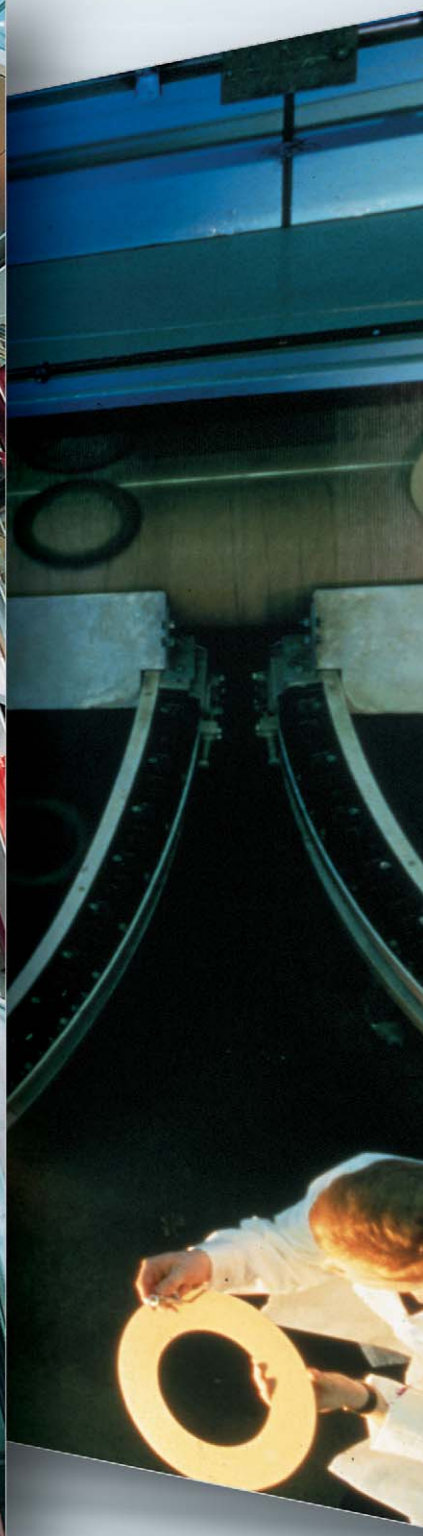

fasis

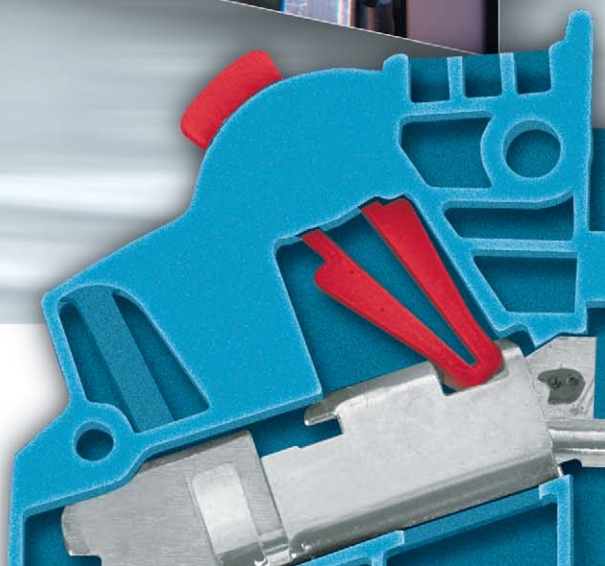

DIN Rail Terminal Blocks

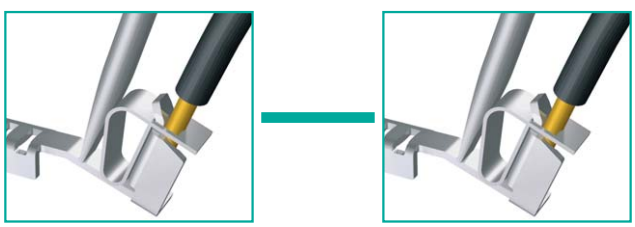

fasis DIN rail terminal blocks – spring clamp connection

BIT = Building
Installation
Technology

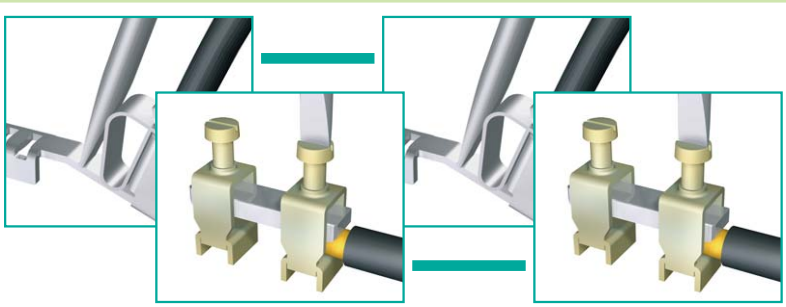

fasis BIT DIN rail terminal blocks – spring clamp connection

selos BIT DIN rail terminal blocks – screw clamp connection

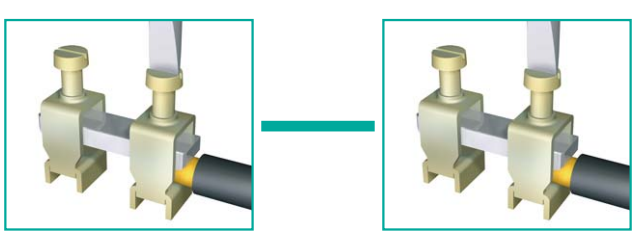

selos DIN rail terminal blocks – screw clamp connection

CONTENTS

fasis **DIN rail terminal blocks with spring clamp connection, type WKF**	**Product overview and information**	Page 16
	• Feed through blocks	Page 20
	• Ground blocks	Page 22
	• Neutral disconnect blocks	Page 24
	• Supply blocks for junction boxes	Page 25
	• Duo feed through blocks	Page 26
	• Duo ground blocks	Page 28
	• Multi-tier blocks	Page 30
	DIN rail terminal blocks with spring and plug-in connection for PC board terminals	Page 34
	• Duo feed through blocks with plug-in connection for PC board terminals	Page 36
	• Disconnect blocks with fuse holder / diode plug	Page 38
	• Knife-edge disconnect block	Page 39
	• Micro modular feed through blocks, type WKFM	Page 40
	Initiator and actuator blocks, type WKF 1.5 KO	Page 42
	• Initiator and actuator blocks	Page 44
Accessories / marking accessories	for DIN rail terminal blocks with spring clamp connection, type WKF	Page 46
fasis BIT **Installation blocks, type WKI/WKIF**	**Product overview and information**	Page 50
	Installation blocks with spring clamp connection	Page 56
	• Installation blocks, type WKIF	Page 58
	• Feed through blocks	Page 62
	• Neutral disconnect blocks	Page 64
	• Ground blocks	Page 66
selos BIT **Installation blocks, type WK/WKI**	**Installation blocks with screw clamp connection**	Page 68
	• Installation blocks, type WKI 4...	Page 72
	• Feed through blocks	Page 78
	• Neutral disconnect blocks	Page 80
	• Ground blocks	Page 82
	• PEN assembly block	Page 84
Accessories / marking accessories	for DIN rail terminal blocks with screw clamp connection for junction boxes	Page 86
selos **DIN rail terminal blocks with screw clamp connection, type WKN**	**Product overview and information**	Page 92
	• Feed through blocks, type WK/WKN	Page 102
	• Neutral disconnect block with U-foot	Page 106
	• Ground blocks	Page 108
	• Duo feed through blocks	Page 112
	• Multi-tier feed through blocks	Page 116
	• Initiator blocks	Page 118
	• Disconnect blocks	Page 122
	• Fuse blocks	Page 124
	• Feed through blocks with fuse	Page 126
	• Fuse block with NEOZED ®cartridge for TS 35	Page 128
	• Balance resistor terminals with trimmer potentiometer	Page 130
	• Diode blocks	Page 131
	• Thermal voltage terminals	Page 132
	• Ground disconnect blocks	Page 133

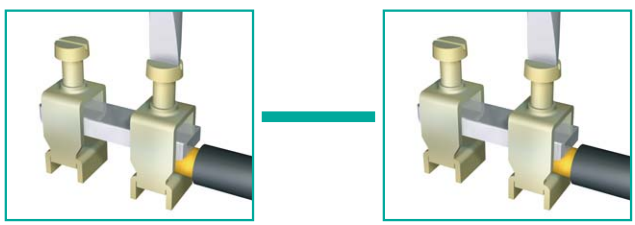

selos DIN rail terminal blocks – screw clamp connection

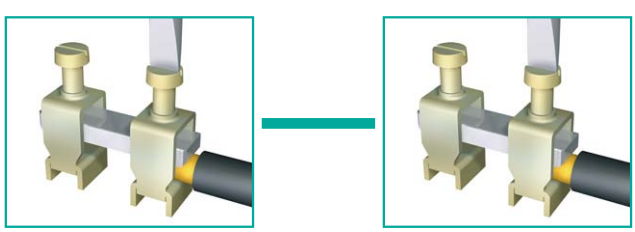

selos CLASSIC LINE

DIN rail terminal blocks – screw clamp connection

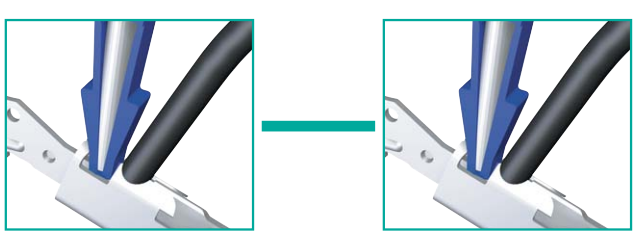

taris DIN rail terminal blocks – IDC technology

CONTENTS

selos PLUG **selos MINI**	• Feed through blocks with pluggable connection for PC board terminals • Feed through blocks / distribution blocks with screw / tab connection • Feed-through blocks with solder connection • Micro modular feed through blocks for TS 15	Page 134 Page 138 Page 142 Page 144
Measuring disconnect blocks	**Information**	Page 146
selos POWER LINE	**Information** • Stud-type terminal blocks for TS 32 and TS 35 • Feed-through blocks up to 240 mm^2	Page 150 Page 152 Page 156
Accessories for DIN rail terminal blocks		Page 160
Marking accessories		Page 178
selos CLASSIC LINE, DIN rail terminal blocks with screw connection, type 9700 A.. S35	**Product overview and information** • Feed through blocks • Neutral disconnect blocks • Ground blocks • PEN assembly block	Page 184 Page 190 Page 193 Page 194 Page 195
Accessories / marking accessories	for DIN rail terminal blocks with screw clamp connection, type 9700 A/.. S35	Page 196
TOP system	**Information** • Stacking coordinates 32pole • Shield connection clamps, type SK • Shield connection clamps, type SKN	Page 202 Page 206 Page 210 Page 212
Busbar components	• Modular N and PE distributor terminals • Modular pluggable connectors with screw clamp connection • Compact pluggable connectors with screw clamp connection and coding • Modular feed-through blocks with solder tab connector	Page 214 Page 216 Page 218 Page 219 Page 220
taris DIN rail terminal blocks with IDC technology, type WKC	**Product overview and information** • Feed through blocks, ground blocks • Duo feed through blocks and duo ground blocks • Multi-tier blocks, function blocks • Knife-edge disconnect block • Disconnect blocks	Page 222 Page 232 Page 234 Page 238 Page 240 Page 242
Hybrid DIN rail terminal blocks with IDC and screw connection, type WKC...S/C	**Information** • Hybrid feed through and ground blocks	Page 244 Page 232
Accessories / marking accessories	for DIN rail terminal blocks with IDC technology	Page 248

Software for DIN rail terminal blocks

wieplan

- ❒ **Electronic catalog for terminal block assemblies**
- ❒ **Via software: drawing/part lists/order data**
- ❒ **Shopping cart function via www.wieland-electric.com**

Part number

Software 95.502.1000.0

Manual 05.563.6389.0

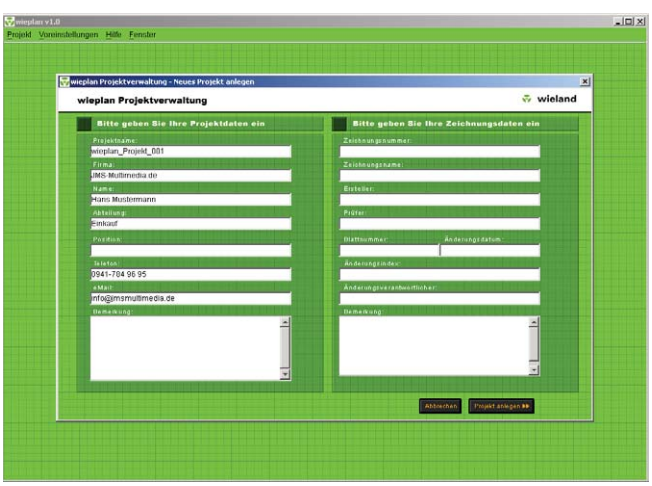

Project management

wieplan enables you to clearly manage your projects and part projects.

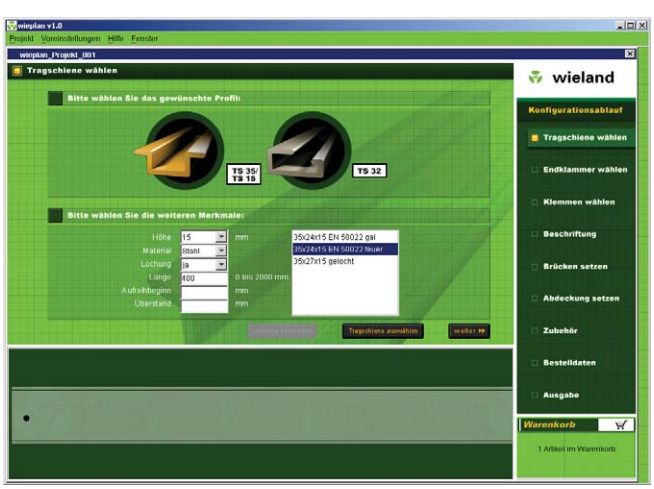

Select a mounting rail

You can select a mounting rail as per the following characteristcs:
– Type / rail design
– Length
– Solid or slotted

You can also define the length of the rail section left empty in front of the block assembly and the spaces between the individual blocks.

wieplan

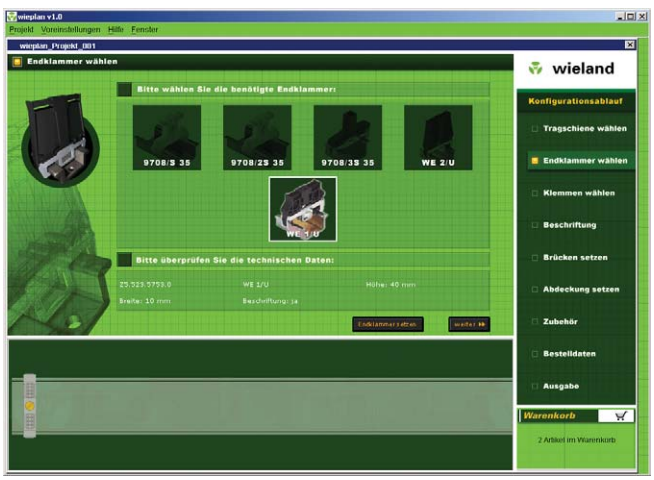

Select an end clamp

You can select the end clamp which matches your selected mounting rail.

Select the terminal blocks

Intuitive selection of terminal blocks based on certain characteristics such as function, current, voltage, cross section or as per block type or part number. After composition of the terminal block assembly, the blocks can be jumpered and/or marked, and further accessories can be added. You are offered the matching accessories for each selection. Plausibility checks are made with regard to end plates, partitions, covers and more.

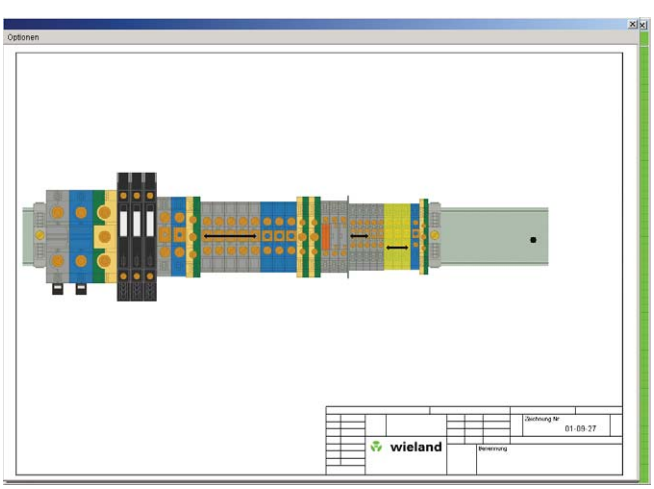

Print-out and drawing

The completed terminal block assembly can be displayed on the screen in form of a drawing, or it can be exported as a electronic file. The block assembly can also be completely mounted or individual parts can be ordered online.

DIN rail terminal blocks with spring clamp connection, type *WKF*

fasis

Spring clamp connection	**0.13 to 16 mm²**
Standard DIN rail terminal blocks	2.5 to 16 mm²
Installation terminal blocks	2.5 to 16 mm²
Duo terminal blocks	2.5/4 mm² double/PCB
Multi-tier blocks	1.5 mm²
Disconnect blocks **Initiator/actuator terminal blocks**	4 mm²

fasis for TS 35

- with all required accessories
- with snap-on marking accessories
- with DQS certification
- Flammability class accord. to UL 94 V-0/V-2

All Wieland Components which require CE general certification are CE certified, and identified with the CE logo.

fasis

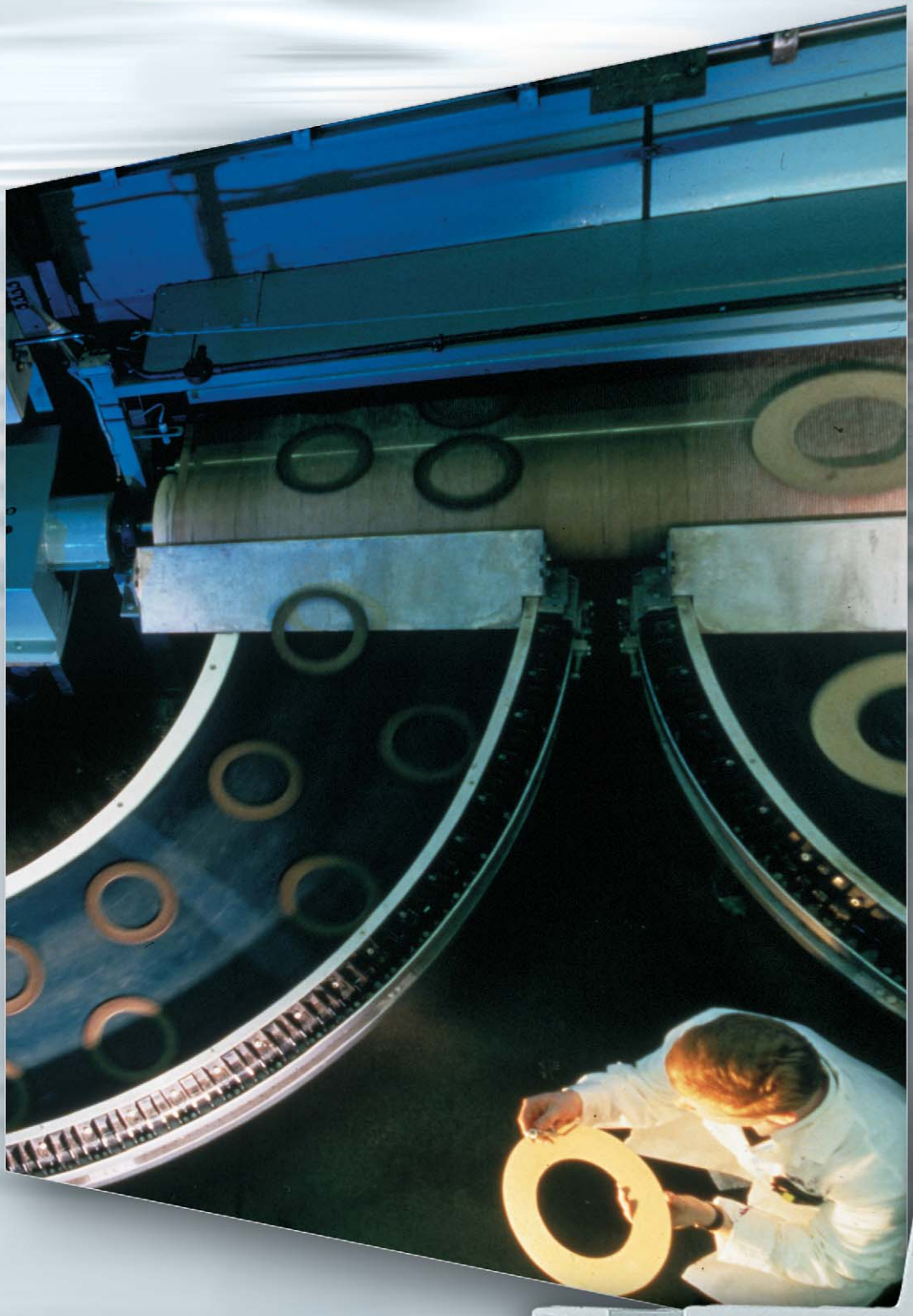

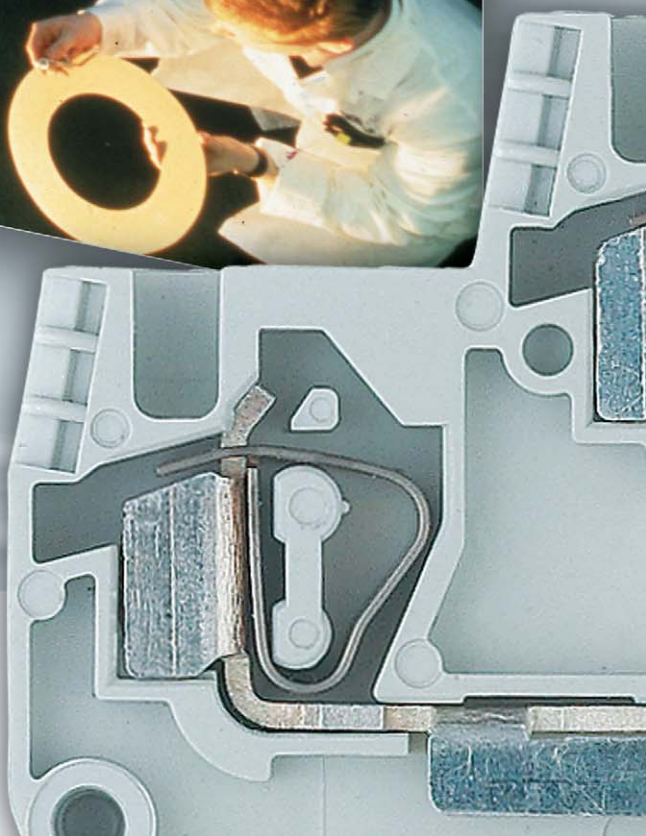

DIN Rail Terminal Blocks

with Spring Clamp Connection, Type *WKF*

DIN rail terminal blocks with spring clamp connection, type *WKF*

fasis

	2.5 mm² (12 AWG)	4 mm² (10 AWG)	6 mm² (8 AWG)
Feed-through blocks			
Neutral feed-through blocks			
Ground blocks			

Standard DIN Rail Terminal Blocks

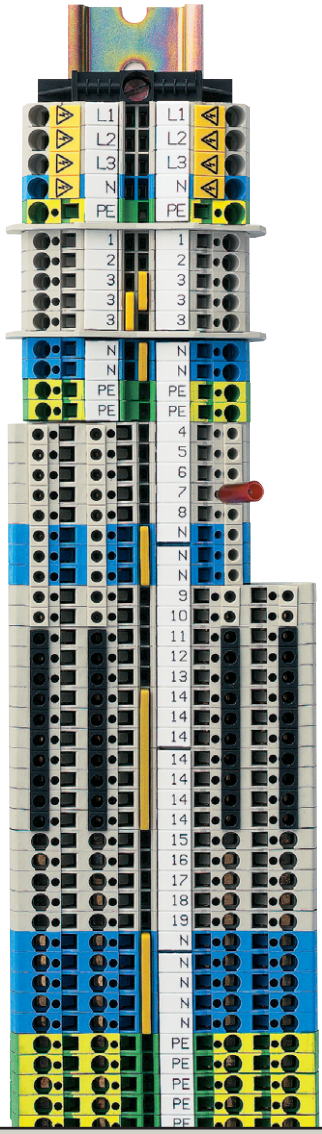

	1.5 mm² (14 AWG)	4 mm² (10 AWG)
Feed-through		
Branch Circuit VB		
Feed-through and Ground D/SL		
Ground		
Electronic Component Addition		
Double-tier block with pluggable connection		

Double-tier blocks

Knife edge disconnect block

Disconnect block with fuse plug

Disconnect block with diode plug

Disconnect

Feed-through blocks

Neutral disconnect blocks

Ground blocks

Sensor blocks with/without LED

10 mm² (6 AWG)	16 mm² (4 AWG)

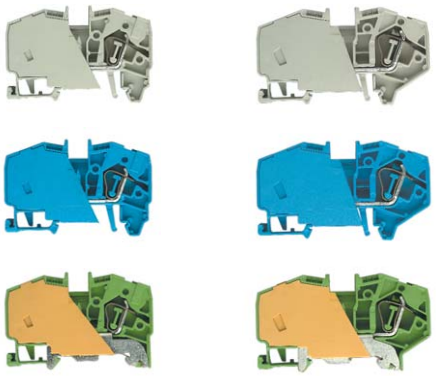

4 mm² (10 AWG)

blocks

2.5 mm² (12 AWG)	4 mm² (10 AWG)	16 mm² (4 AWG)

see ***fasis*** BIT Section

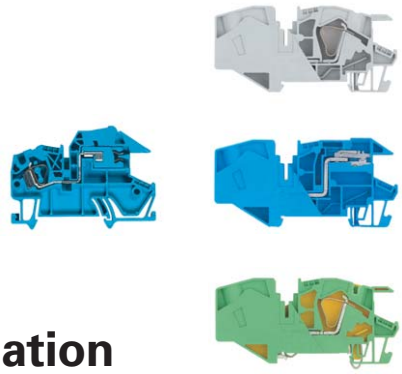

Installation DIN Rail Terminal Blocks

	2.5 mm² (12 AWG)	4 mm² (10 AWG)
Feed-through blocks		
Neutral feed-through		
Ground blocks		

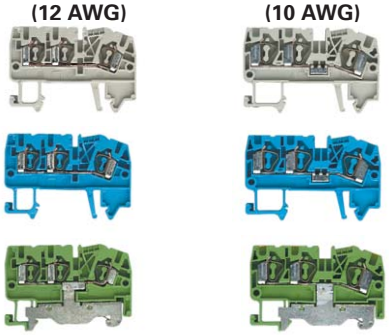

Duo 1/2

	2.5 mm² (12 AWG)
Feed-through block	
Duo feed-through block	
Neutral feed-through block	
Ground block	

Duo 2/2

Feed-through block with pluggable connection	
Neutral feed-through block with pluggable connection	
Ground block with pluggable connection	

Duo 2/8113

Duo DIN Rail Terminal Blocks

KOE...	KOI 3L...	KOI 3L/SL...	KOA 2L...

Sensor and actuator blocks

DIN rail terminal blocks with spring clamp connection, type *WKF*

fasis

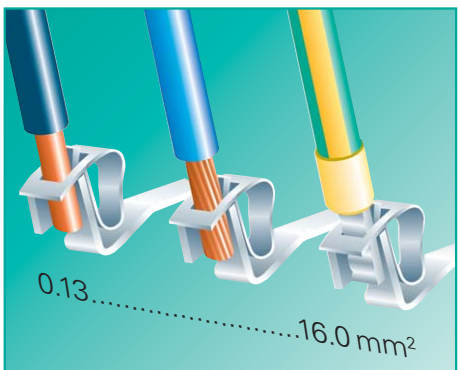

System advantages

❒ **Spring clamp connection,** screwless technology

Separation of electrical and mechanical functions

Application advantages

→ **Dynamic connections**
Protection of the connection against "cold flow" and creep

→ **Pre-programmed clamping force**
The clamping force required to connect the wire, is created by the spring element of the clamp

→ **Secure and maintenance-free electrical connection**
According to EN 60947-7-1

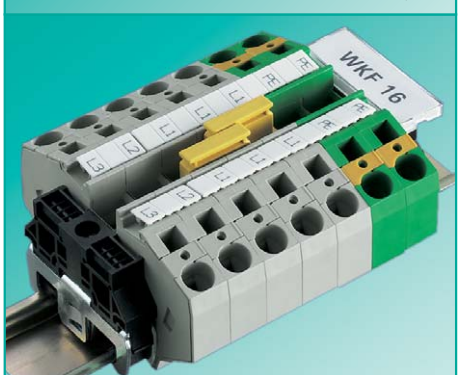

❒ **TOP connection**
Wire entry and screwdriver access in the same plane

❒ **Built in test points**

→ **Clear and neat wiring**
In small confined spaces

→ **Test points for test plugs** up to Ø 2.3 mm on all clamping points, without having to remove the connected wire

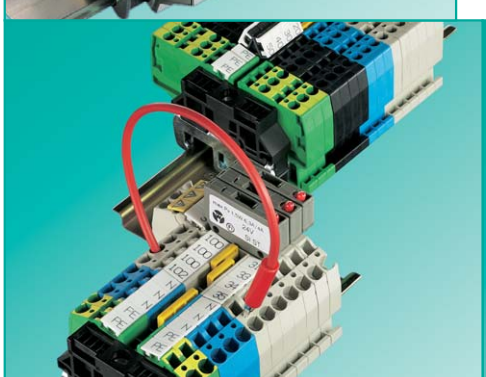

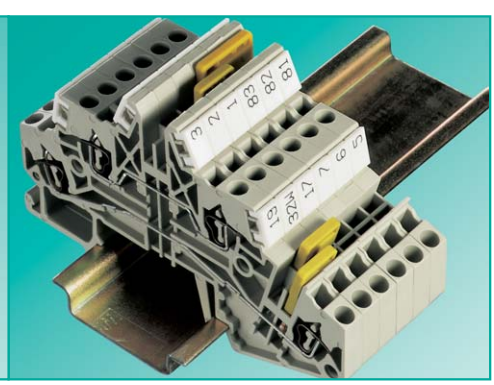

❒ **Economic system**

→ Time saving due to pluggable cross connectors in potential commoning

❒ **Fatigue-free handling**

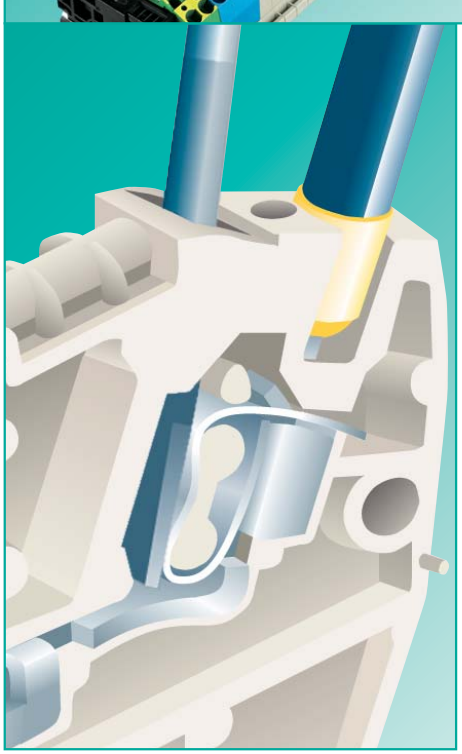

❒ **Connection capabilities**

The clamping bodies of the WKF series can take in any copper conductor types without ferrules

Due to the construction of the funnelled wire entry, stripped wires can be connected without fraying

→ Both solid and stranded wires can be connected to WKF terminal blocks with and without ferrules

❒ **Tool**

For optimal operation of our WKF terminal blocks we recommend the use of the following DIN 5264 screwdrivers with cylindric design and flat blades

→Rated cross section	Blade dimensions of the screwdrivers
14 AWG 1.5 mm²	0.6 x 3.5 mm
12 AWG 2.5 mm²	0.6 x 3.5 mm
10 AWG 4 mm²	0.6 x 3.5 mm
8 AWG 6 mm²	0.8 x 4.0 mm
6 AWG 10 mm²	0.8 x 4.0 mm
4 AWG 16 mm²	1.0 x 5.5 mm

fasis

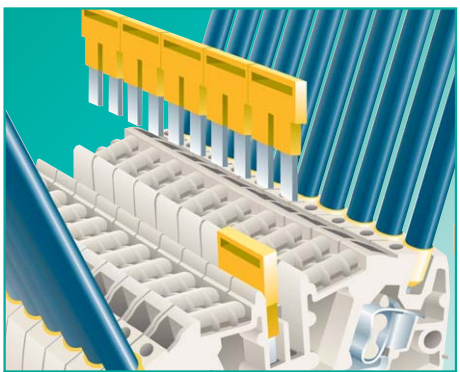

Cross connection (Jumper Bars)

- ❒ The insulated cross connectors IVB WKF... are completely touch safe
- ❒ No partiton plates required between jumpered terminal groups of different potential
- ❒ The cross connectors IVB WKF... bear the same rated current as the terminal
- ❒ **For modular test plugs see page 177**

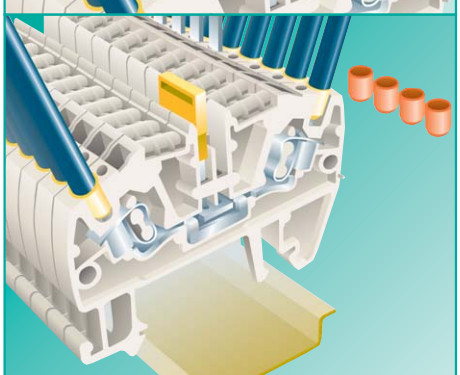

Wire entry guides

- ❒ For the connection of wires with cross sections smaller than 18 AWG, we recommend the use of wire entry guides
- ❒ Wire entry guides prevent the wires from being inserted beyond the optimal clamping point and ensures a safe and secure connection

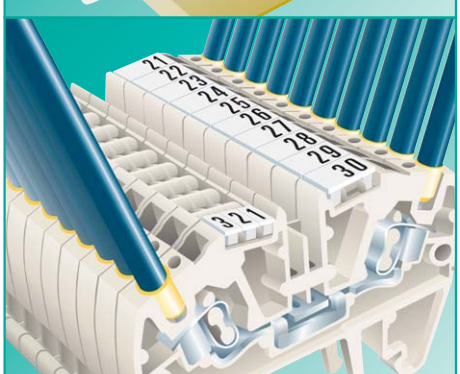

Marking systems

- ❒ Marking facility is down the center so that the marking tag is not covered by the conductor
- ❒ Single marking tag in 5, 6, or 8 mm spacing
- ❒ Marking strips (10 tags) to snap on to the terminal blocks
- ❒ Tear-off marking strips for 3-digit marking facilities per block
- ❒ Custom marking upon request

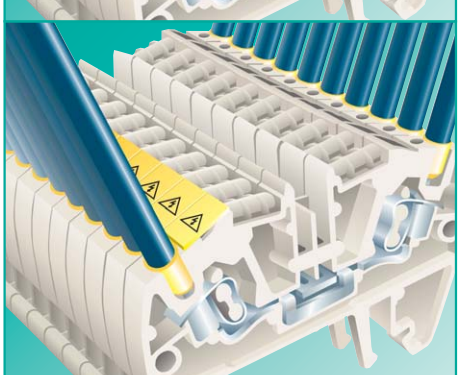

Cover with warning symbol

- ❒ Cover with warning symbol ADC to snap on to blocks which are still live after switched-off (VDE 0113)
- ❒ Cover can only be removed with a screwdriver

DQS certificates for all products

- ❒ Quality standard as per DIN ISO 9001 in Development, Production, Assembly
- ❒ Continued control of the quality standard by means of regular internal and external quality audits
- ❒ Compatible with certificates of other countries:
  – BSI Certificate, Great Britain
  – SQS Certificate, Switzerland
  – Aib-Vincotte Certificate, Belgium
  – ÖQS Certificate, Austria

Material

❒ Metal parts

Special alloys and surface treatments provide low contact resistance and high corrosion resistance

Clamping spring: stainless CrNi steel

Current Carrying bar: tin-plated copper

❒ Insulating material

Polyamide has excellent electrical, chemical and mechanical characteristics

Insulating housing: Polyamide 66/6

Tracking resistance: CTI 600

Flammability class:

Type WKF...	UL 94 V-0
Type WKIF 16...	UL 94 V-2

(see also section ***facts*** & DATA)

Our ***wieplan*** software helps to plan your DIN rail terminal block assemblies (see page 10/11).

Note

The information regarding cross-sectional areas and connection types pertains to wires without ferrules. Ferrules are not neccessary for secure connection.

The voltage ratings apply to the terminals in their intended application. When different products are mounted adjacent to each other, the proper isolation distances must be adhered to. For this purpose, **Wieland** offers a large selection of appopriate accessories.

If the ground blocks of the WKF series are not used in block assemblies but are mounted to the rail as single terminal blocks, end clamps have to be used.

A detailed description of technical data, the standards requirements, and the application conditions can be found in catalogue section ***facts*** & DATA.

DIN Rail terminal blocks with spring clamp connection, type *WKF*

fasis

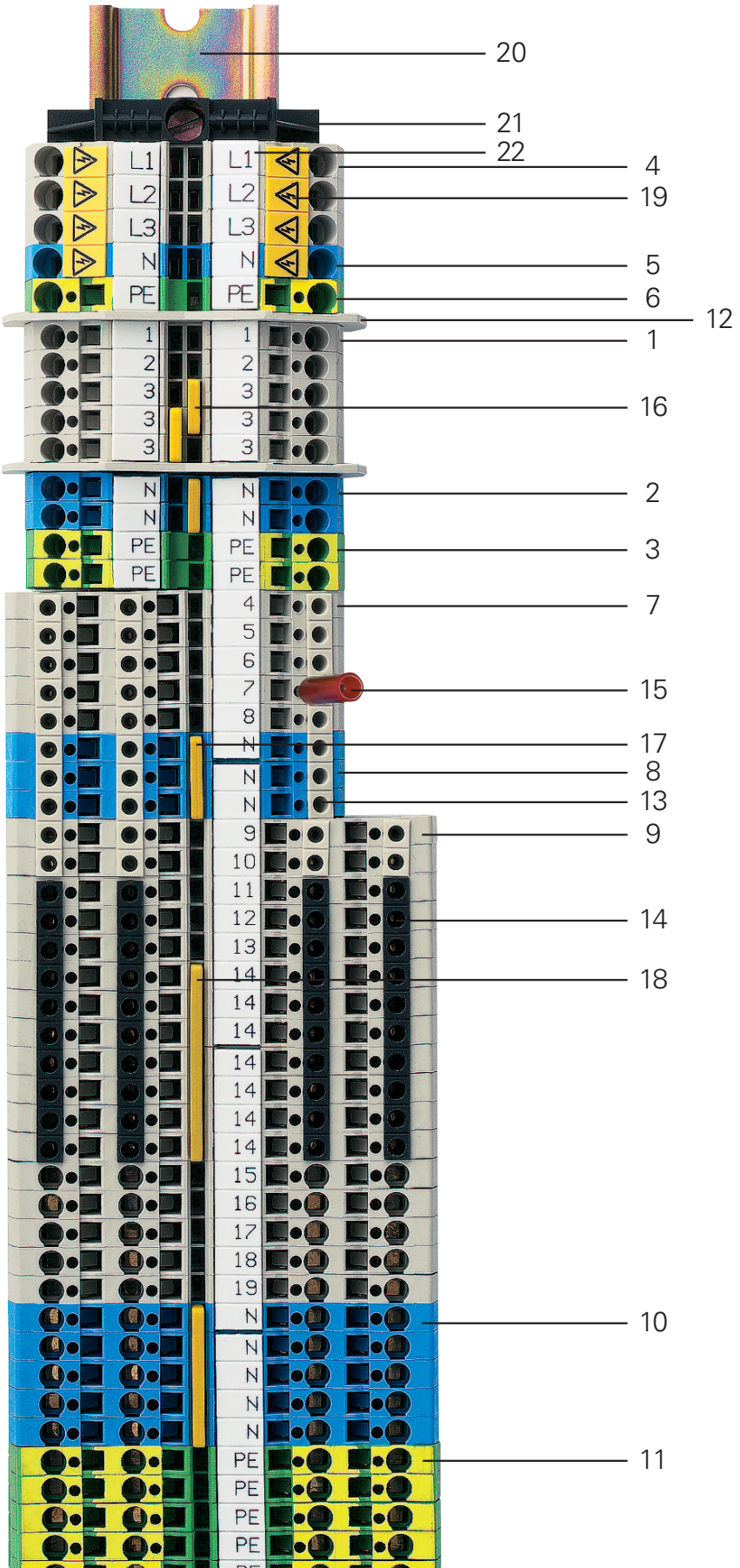

WKF sample rail

fasis

Pos.	Description	Type	Part. number
1	Feed-through block	WKF 2,5/35	56.703.0053.0
2	Feed-through block, blue	WKF 2,5/35 BLAU	56.703.0053.6
3	Ground block	WKF 2,5 SL/35	56.703.9053.0
4	Feed-through block	WKF 4/35	56.704.0053.0
5	Feed-through block, blue	WKF 4/35 BLAU	56.704.0053.6
6	Ground block	WKF 4 SL/35	56.704.9053.0
7	Duo feed-through block	WKF 2,5/D1/2/35	56.703.5053.0
8	Duo feed-through block, blue	WKF 2,5/D1/2/35 BLAU	56.703.5053.6
9	Duo feed-through block	WKF 2,5/D2/2/35	56.703.5153.0
10	Duo feed-through block, blue	WKF 2,5/D2/2/35 BLAU	56.703.5153.6
11	Duo ground block	WKF 2,5/D2/2/SL/35	56.703.9153.0
12	Partition plate	TWF 2,5-4	07.312.2253.0
13	Wire entry guide	LEL 2,5/2 GRAU	05.561.6553.0
14	Wire entry guide	LEL 2,5/3 SCHWARZ	05.561.6753.0
15	Test plug with insulated handle	WK 2,5/ST2/2,3	Z5.553.2921.0
16	Cross connector, insulated	IVB WKF 2,5-2	Z7.280.6227.0
17	Cross connector, insulated	IVB WKF 2,5-3	Z7.280.6327.0
18	Cross connector, insulated	IVB WKF 2,5-7	Z7.280.6727.0
19	Cover with warning symbol	ADF 4/4 GELB	04.343.6153.8
20	Mounting rail	35x27x7,5 gelocht	98.300.1000.0
21	End clamp	9808/2 S35	Z5.522.8553.0
22	Marking strips	9705 A/6/10 B	04.856.0453.0

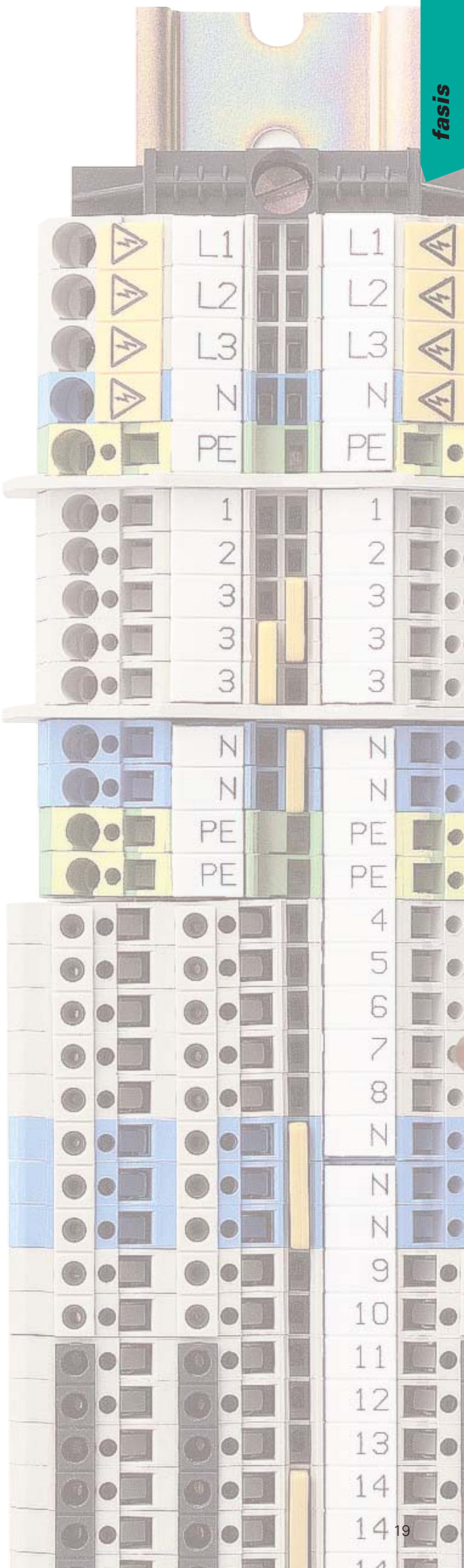

Feed-through blocks with spring clamp connection, type *WKF*

fasis

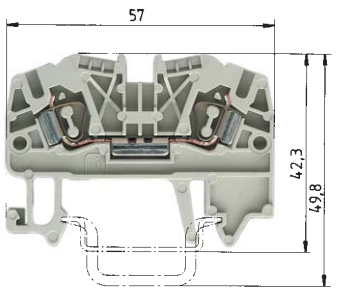

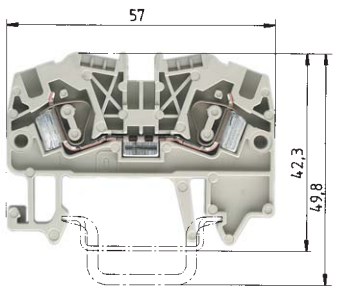

	WKF 2.5/35			WKF 4/35		
	fine stranded	solid	V	fine stranded	solid	V
EN 60 947-7-1/DIN VDE 0611 T1	0.13 – 2.5 mm²	0.13 – 4 mm²	800 V/8 kV/3	0.13 – 4 mm²	0.13 – 6 mm²	800 V/8 kV/3
UL ratings field/factory wiring	No. 22-12 AWG		600 V	No. 22-10 AWG		600 V
CSA ratings	No. 24-12 AWG		600 V	No. 22-10 AWG		600 V
Width Wire strip length	5 mm		11 mm	6 mm		11 mm
Approvals	SEV-EEX RINA LR LCIE BV * **			SEV-EEX RINA LR LCIE BV * **		

		Type	Part no.	Std. pack	Type	Part no.	Std. pack
Feed-through block	Color: gray	WKF 2,5/35	56.703.0053.0	100	WKF 4/35	56.704.0053.0	100
Feed-through block	Color: blue	WKF 2,5/35 BLAU	56.703.0053.6	100	WKF 4/35 BLAU	56.704.0053.6	100
Accessories							
1. Mounting rail 35, 7.5 mm high	L = 2 m	35x27x7,5 EN 60715	98.300.0000.0	1	35x27x7,5 EN 60715	98.300.0000.0	1
Mounting rail 35, 15 mm high	L = 2 m	35x24x15 EN 60715	98.360.0000.0	1	35x24x15 EN 60715	98.360.0000.0	1
2. End clamp TS 35, with screw	8 mm wide	9708/2 S35	Z5.522.8553.0	100	9708/2 S35	Z5.522.8553.0	100
End clamp TS 35, without screw	8 mm wide	WEF 1/35	Z5.523.9353.0	100	WEF 1/35	Z5.523.9353.0	100
3. End plate	Color: gray	APF 2,5 – 4	07.312.2153.0	10	APF 2,5 – 4	07.312.2153.0	10
	Color: blue	APF 2,5 – 4 BLAU	07.312.2153.6	10	APF 2,5 – 4 BLAU	07.312.2153.6	10
4. Partition plate	Color: gray	TWF 2,5 – 4	07.312.2253.0	10	TWF 2,5 – 4	07.312.2253.0	10
	Color: blue	TWF 2,5 – 4 BLAU	07.312.2253.6	10	TWF 2,5 – 4 BLAU	07.312.2253.6	10
5. Cross connector	2pole	IVB WKF 2,5 – 2	Z7.280.6227.0	10	IVB WKF 4 – 2	Z7.261.1227.0	10
insulated (jumper bar)	3pole	IVB WKF 2,5 – 3	Z7.280.6327.0	10	IVB WKF 4 – 3	Z7.261.1327.0	10
	4pole	IVB WKF 2,5 – 4	Z7.280.6427.0	10	IVB WKF 4 – 4	Z7.261.1427.0	10
	5pole	IVB WKF 2,5 – 5	Z7.280.6527.0	10	IVB WKF 4 – 5	Z7.261.1527.0	10
	6pole	IVB WKF 2,5 – 6	Z7.280.6627.0	10	IVB WKF 4 – 6	Z7.261.1627.0	10
	7pole	IVB WKF 2,5 – 7	Z7.280.6727.0	20	IVB WKF 4 – 7	Z7.261.1727.0	20
	8pole	IVB WKF 2,5 – 8	Z7.280.6827.0	20	IVB WKF 4 – 8	Z7.261.1827.0	20
	9pole	IVB WKF 2,5 – 9	Z7.280.6927.0	20	IVB WKF 4 – 9	Z7.261.1927.0	20
	10pole	IVB WKF 2,5 – 10	Z7.280.7027.0	20	IVB WKF 4 – 10	Z7.261.2027.0	20
6. Wire entry guide	0.13 – 0.2 mm²	LEL 2,5/1 WEISS	05.561.6553.0	100	LEL 4/1 WEISS	05.561.8553.0	100
	0.25 – 0.5 mm²	LEL 2,5/2 GRAU	05.561.6653.0	100	LEL 4/2 GRAU	05.561.8653.0	100
	0.75 – 1.0 mm²	LEL 2,5/3 SCHWARZ	05.561.6753.0	100	LEL 4/3 SCHWARZ	05.561.8753.0	100
7. Cover with warning symbol over 4 blocks		ADF 2,5/4 GELB	04.343.6053.8	10	ADF 4/4 GELB	04.343.6153.8	10
8. Screwdriver, uninsulated (jumper bar)		DIN 5264 B 0,6x3,5	06.502.4000.0	5	DIN 5264 B 0,6x3,5	06.502.4000.0	5
9. Test plug with spring connection		PSWKC/F	Z1.299.9753.0		PSWKC/F	Z1.299.9753.0	
End plate / spacer		ZP/APPS	07.312.6053.0		ZP/APPS	07.312.6053.0	
Blank module for staggered testing			01.299.9753.0			01.299.9753.0	
*) End plate required for each test plug to achieve							
6 mm pitch		* CL I, ZN1, AExe II			* CL I, ZN1, AExe II		
Marking accessories see page 48/49 and page 90/91		**CL I, ZN1, Exe II			**CL I, ZN1, Exe II		

fasis

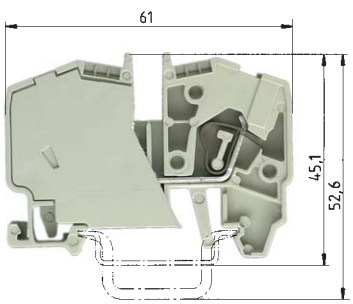

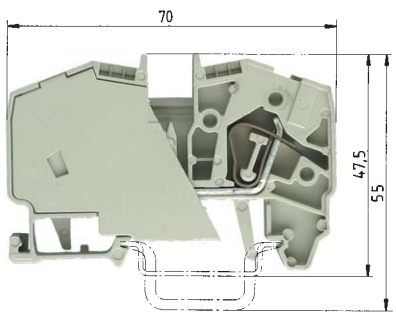

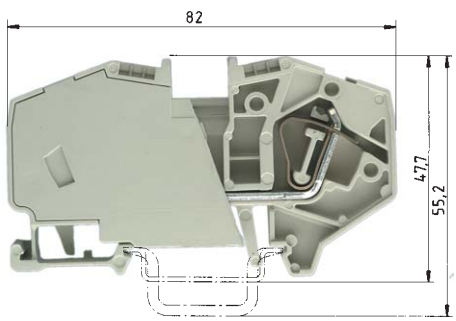

WKF 6/35

fine stranded	solid	V	A
0.5 – 6 mm²	0.5 – 6 mm²	800 V/8 kV/3	41
No. 20-8 AWG		600 V	40
No. 20-8 AWG		600 V	47
8 mm			12 mm

SEV UL * CSA **

WKF 10/35

fine stranded	solid	V	A
2.5 – 10 mm²	2.5 – 10 mm²	800 V/8 kV/3	57
No. 14-6 AWG		600 V	55
No. 14-6 AWG		600 V	65
10 mm			13 mm

SEV LR UL * CSA **

WKF 16/35

fine stranded	stranded	V	A
4 – 16 mm²	4 – 16 mm²	800 V/8 kV/3	76
No. 12-4 AWG		600 V	75
No. 12-4 AWG		600 V	78
12 mm			15 mm

SEV UL * CSA **

Type	Part no.	Std. pack
WKF 6/35	56.706.0053.0	100
WKF 6/35 BLAU	56.706.0053.6	100
35x27x7,5 EN 60715	98.300.0000.0	1
35x24x15 EN 60715	98.360.0000.0	1
9708/2 S35	Z5.522.8553.0	100
WEF 1/35	Z5.523.9353.0	100
IVB WKF 6 – 2	Z7.282.4227.0	10
ADF 6/4 GELB	04.343.6253.8	10
DIN 5264 B 0,8x4	06.502.4100.0	5
PSWKC/F	Z1.299.9753.0	
ZP/APPS	07.312.6053.0	
	01.299.9753.0	

* CL I, ZN1, AExe II
**CL I, ZN1, Exe II

Type	Part no.	Std. pack
WKF 10/35	56.710.0053.0	50
WKF 10/35 BLAU	56.710.0053.6	50
35x27x7,5 EN 60715	98.300.0000.0	1
35x24x15 EN 60715	98.360.0000.0	1
9708/2 S35	Z5.522.8553.0	100
WEF 1/35	Z5.523.9353.0	100
IVB WKF 10 – 2	Z7.283.8227.0	10
ADF 10/4 GELB	04.343.6453.8	10
DIN 5264 B 0,8x4	06.502.4100.0	5
PSWKC/F	Z1.299.9753.0	
ZP/APPS	07.312.6053.0	
	01.299.9753.0	

* CL I, ZN1, AExe II
**CL I, ZN1, Exe II

Type	Part no.	Std. pack
WKF 16/35	56.716.0053.0	50
WKF 16/35 BLAU	56.716.0053.6	50
35x27x7,5 EN 60715	98.300.0000.0	1
35x24x15 EN 60715	98.360.0000.0	1
9708/2 S35	Z5.522.8553.0	100
WEF 1/35	Z5.523.9353.0	100
IVB WKF 16 – 2	Z7.284.4227.0	10
ADF 16/4 GELB	04.343.6653.8	10
DIN 5264 B 1x5,5	06.502.4200.0	5
PSWKC/F	Z1.299.9753.0	
ZP/APPS	07.312.6053.0	
	01.299.9753.0	

* CL I, ZN1, AExe II
**CL I, ZN1, Exe II

Ground blocks
with spring clamp connection, type *WKF*

fasis

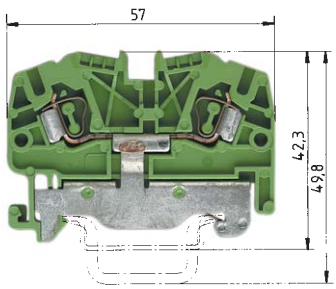

Current carrying capabilities of the mounting rails see catalogue section ***facts*** & DATA

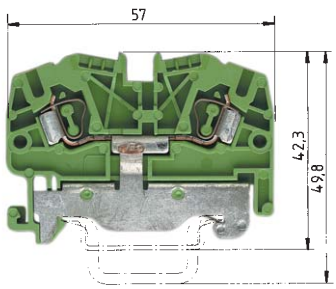

Current carrying capabilities of the mounting rails see catalogue section ***facts*** & DATA

		WKF 2.5 SL/35				WKF 4 SL/35			
		fine stranded	solid	V	A	fine stranded	solid	V	A
EN 60 947-7-2/DIN VDE 0611 T3		0.13 – 2.5 mm²	0.13 – 4 mm²	800 V/8 kV/3	24	0.13 – 4 mm²	0.13 – 6 mm²	800 V/8 kV/3	32
UL ratings	field/factory wiring	No. 22-12 AWG		600 V		No. 22-10 AWG		600 V	
CSA ratings		No. 24-12 AWG		600 V		No. 22-10 AWG		600 V	
Width	Wire strip length	5 mm			11 mm	6 mm			11 mm
Approvals		GL LloyD SEV-EEX SEV OVE D N NV FI KEMA KEUR S RINA LR LCIE BV UL * CSA **				GL LloyD SEV-EEX SEV OVE D N NV FI KEMA KEUR S RINA LR LCIE BV UL * CSA **			

		Type	Part no.	Std. pack	Type	Part no.	Std. pack
Ground block	Color: yellow/green	WKF 2,5 SL/35	56.703.9053.0	100	WKF 4 SL/35	56.704.9053.0	100
Accessories							
1. Mounting rail 35, 7.5 mm high	L = 2 m	35x27x7,5 EN 60715	98.300.0000.0	1	35x27x7,5 EN 60715	98.300.0000.0	1
Mounting rail 35, 15 mm high	L = 2 m	35x24x15 EN 60715	98.360.0000.0	1	35x24x15 EN 60715	98.360.0000.0	1
2. End clamp TS 35, with screw	8 mm wide	9708/2 S35	Z5.522.8553.0	100	9708/2 S35	Z5.522.8553.0	100
End clamp TS 35, without screw	8 mm wide	WEF 1/35	Z5.523.9353.0	100	WEF 1/35	Z5.523.9353.0	100
3. End plate	Color: gray						
	Color: blue						
	Color: green	APF 2,5 – 4 GRÜN	07.312.2153.7	10	APF 2,5 – 4 GRÜN	07.312.2153.7	10
4. Partition plate	Color: gray						
	Color: blue						
5. Cross connector	2pole						
insulated (jumper bar)	3pole						
	4pole						
	5pole						
	6pole						
	7pole						
	8pole						
	9pole						
	10pole						
6. Wire entry guide	0.13 – 0.2 mm²	LEL 2,5/1 WEISS	05.561.6553.0	100	LEL 4/1 WEISS	05.561.8553.0	100
	0.25 – 0.5 mm²	LEL 2,5/2 GRAU	05.561.6653.0	100	LEL 4/2 GRAU	05.561.8653.0	100
	0.75 – 1.0 mm²	LEL 2,5/3 SCHWARZ	05.561.6753.0	100	LEL 4/3 SCHWARZ	05.561.8753.0	100
7. Cover with warning symbol over 4 blocks							
8. Screwdriver, uninsulated (jumper bar)		DIN 5264 B 0,6x3,5	06.502.4000.0	5	DIN 5264 B 0,6x3,5	06.502.4000.0	5
		* CL I, ZN1, AExe II			* CL I, ZN1, AExe II		
		**CL I, ZN1, Exe II			**CL I, ZN1, Exe II		
Marking accessories see page 48/49 and page 90/91		Please see note on page 17!			Please see note on page 17!		

fasis

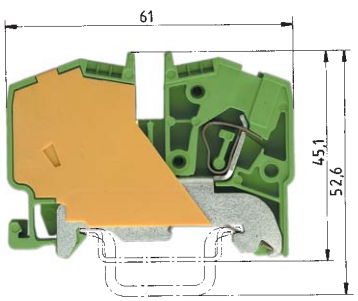

Current carrying capabilities of the mounting rails see catalogue section ***facts*** & DATA

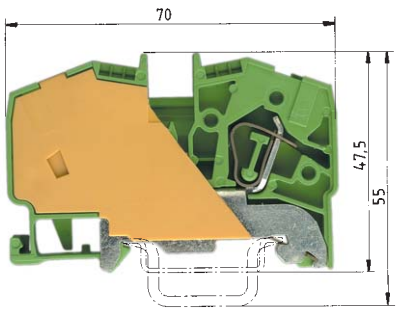

Current carrying capabilities of the mounting rails see catalogue section ***facts*** & DATA

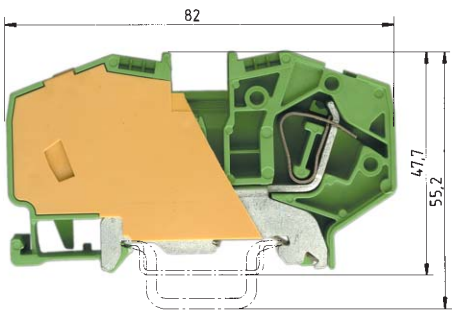

Current carrying capabilities of the mounting rails see catalogue section ***facts*** & DATA

WKF 6 SL/35

fine stranded	solid	V	A
0.5 – 6 mm²	0.5 – 6 mm²	800 V/8 kV/3	41
No. 20-8 AWG		600 V	
No. 20-8 AWG		600 V	
8 mm			12 mm

SEV UL * CSA **

WKF 10 SL/35

fine stranded	solid	V	A
2.5 – 10 mm²	2.5 – 10 mm²	800 V/8 kV/3	57
No. 14-6 AWG		600 V	
No. 14-6 AWG		600 V	
10 mm			13 mm

SEV UL * CSA **

WKF 16 SL/35

fine stranded	stranded	V	A
4 – 16 mm²	4 – 16 mm²	800 V/8 kV/3	76
No. 12-4 AWG		600 V	
No. 12-4 AWG		600 V	
12 mm			15 mm

SEV UL * CSA **

Type	Part no.	Std. pack
WKF 6 SL/35	56.706.9053.0	100
35x27x7,5 EN 60715	98.300.0000.0	1
35x24x15 EN 60715	98.360.0000.0	1
9708/2 S35	Z5.522.8553.0	100
WEF 1/35	Z5.523.9353.0	100
DIN 5264 B 0,8x4	06.502.4100.0	5

* CL I, ZN1, AExe II
**CL I, ZN1, Exe II
Please see note on page 17!

Type	Part no.	Std. pack
WKF 10 SL/35	56.710.9053.0	50
35x27x7,5 EN 60715	98.300.0000.0	1
35x24x15 EN 60715	98.360.0000.0	1
9708/2 S35	Z5.522.8553.0	100
WEF 1/35	Z5.523.9353.0	100
DIN 5264 B 0,8x4	06.502.4100.0	5

* CL I, ZN1, AExe II
**CL I, ZN1, Exe II
Please see note on page 17!

Type	Part no.	Std. pack
WKF 16 SL/35	56.716.9053.0	50
35x27x7,5 EN 60715	98.300.0000.0	1
35x24x15 EN 60715	98.360.0000.0	1
9708/2 S35	Z5.522.8553.0	100
WEF 1/35	Z5.523.9353.0	100
DIN 5264 B 1x5,5	06.502.4200.0	5

* CL I, ZN1, AExe II
**CL I, ZN1, Exe II
Please see note on page 17!

Neutral disconnect blocks with spring clamp connection, type *WKF*

fasis

Combination with
Feed-through block WKF 4/35
ground block WKF 4 SL/35

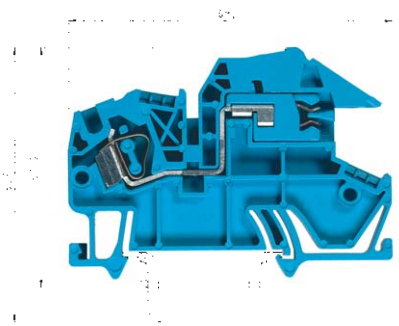

WKF 4 NT/35

		fine stranded	solid	V	A
EN 60 947-7-1; 1991/DIN VDE 0611 T1/08.92		0.13 – 4 mm²	0.13 – 6 mm²	400 V/6 kV/3	30
UL ratings	field/factory wiring				
CSA ratings		No. 22-10 AWG		600 V	25
Width	Wire strip length	6 mm			11 mm
Approvals					

		Type	Part no.	Std. pack
Feed-through block	Color: gray			
Feed-through block	Color: blue			
Neutralleiter-Trennklemme	Color: blue	WKF 4 NT/35	56.704.8153.0	100
Ground block	Color: green/yellow			
Accessories				
1. Mounting rail 35, 7.5 mm high	L = 2 m	35x27x7,5 EN 60715	98.300.0000.0	1
Mounting rail 35, 15 mm high	L = 2 m	35x24x15 EN 60715	98.360.0000.0	1
2. End clamp TS 35, with screw	8 mm wide	9708/2 S35	Z5.522.8553.0	100
End clamp TS 35, without screw	8 mm wide	WEF 1/35	Z5.523.9353.0	100
3. End plate	Color: gray			
	Color: blue	APF 4 NT	07.312.6053.0	10
4. Partition plate				
5. Cross connector	2pole	IVB WKF 4 – 2	Z7.261.1227.0	10
insulated (jumper bar)	3pole	IVB WKF 4 – 3	Z7.261.1327.0	10
	4pole	IVB WKF 4 – 4	Z7.261.1427.0	10
	5pole	IVB WKF 4 – 5	Z7.261.1527.0	10
	6pole	IVB WKF 4 – 6	Z7.261.1627.0	10
	7pole	IVB WKF 4 – 7	Z7.261.1727.0	20
	8pole	IVB WKF 4 – 8	Z7.261.1827.0	20
	9pole	IVB WKF 4 – 9	Z7.261.1927.0	20
	10pole	IVB WKF 4 – 10	Z7.261.2027.0	20
6. Wire entry guide	0.13 – 0.2 mm²	LEL 4/1 WEISS	05.561.8553.0	100
	0.25 – 0.5 mm²	LEL 4/2 GRAU	05.561.8653.0	100
	0.75 – 1.0 mm²	LEL 4/3 SCHWARZ	05.561.8753.0	100
7. Cover with warning symbol over 4 blocks		ADF 4/4 GELB	04.343.6153.8	10
8. Bus bar, E-Cu 10 x 3 mm, tin-plated	L = 1 m	9813 M SN	98.290.1000.0	1
9. Connector clamp for bus bar	8.5 mm wide	WAK 16/2 BLAU	30.494.3021.6	100
	17 mm wide	WAK 35/2	30.494.4121.0	50
10. Bus bar support	8 mm wide	WKIF SH/E/35	Z1.108.8453.0	10
11. Screwdriver uninsulated (jumper bar)		DIN 5264 B 0,6x3,5	06.502.4000.0	5
Marking accessories see page 48/49 and page 90/91				

Supply blocks for junction box with spring clamp connection, type *WKIF*

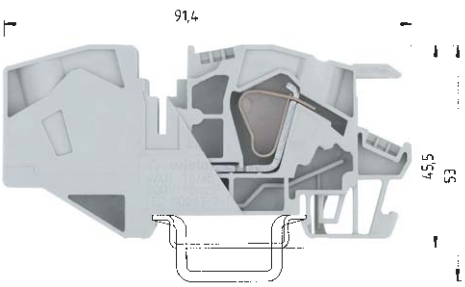

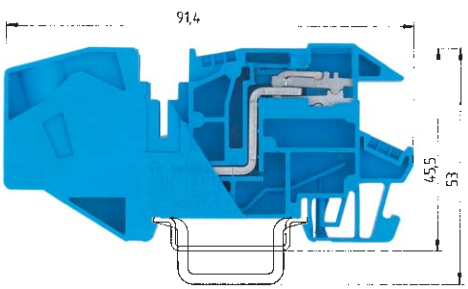

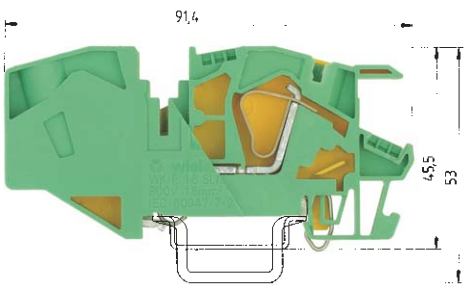

WKIF 16/35

fine stranded	stranded	V	A
4 – 16 mm²	4 – 16 mm²	800 V/8 kV/3	76

12 mm 16 mm

WKIF 16 NT/35

fine stranded	stranded	V	A
4 – 16 mm²	4 – 16 mm²	400 V/6 kV/3	68

12 mm 16 mm

WKIF 16 SL/35

fine stranded	stranded	V	A
4 – 16 mm²	4 – 16 mm²	800 V/8 kV/3	76

12 mm 16 mm

Type	Part no.	Std. pack
WKIF 16/35	56.716.1153.0	50
WKIF 16/35 BLAU	56.716.1153.6	50
35x27x7,5 EN 60715	98.300.0000.0	1
35x24x15 EN 60715	98.360.0000.0	1
9708/2 S35	Z5.522.8553.0	100
IVB WKIF 16 – 2	Z7.284.6227.0	10
9813 M SN	98.290.1000.0	1
WAK 16/2 BLAU	30.494.3021.6	100
WAK 35/2	30.494.4121.0	50
WKIF SH/E/35	Z1.108.8453.0	10
DIN 5264 B 1x5	06.502.4200.0	5

Type	Part no.	Std. pack
WKIF 16 NT/35	56.716.8153.0	50
35x27x7,5 EN 60715	98.300.0000.0	1
35x24x15 EN 60715	98.360.0000.0	1
9708/2 S35	Z5.522.8553.0	100
WEF 1/35	Z5.523.9353.0	100
IVB WKIF 16 – 2	Z7.284.6227.0	10
9813 M SN	98.290.1000.0	1
WAK 16/2 BLAU	30.494.3021.6	100
WAK 35/2	30.494.4121.0	50
WKIF SH/E/35	Z1.108.8453.0	10
DIN 5264 B 1x5	06.502.4200.0	5

Type	Part no.	Std. pack
WKIF 16 SL/35	56.716.9153.0	50
35x27x7,5 EN 60715	98.300.0000.0	1
35x24x15 EN 60715	98.360.0000.0	1
9708/2 S35	Z5.522.8553.0	100
IVB WKIF 16 – 2	Z7.284.6227.0	10
9813 M SN	98.290.1000.0	1
WAK 16/2 BLAU	30.494.3021.6	100
WAK 35/2	30.494.4121.0	50
WKIF SH/E/35	Z1.108.8453.0	10
DIN 5264 B 1x5	06.502.4200.0	5

Duo-feed-through blocks
with spring clamp connection, type *WKF*

fasis

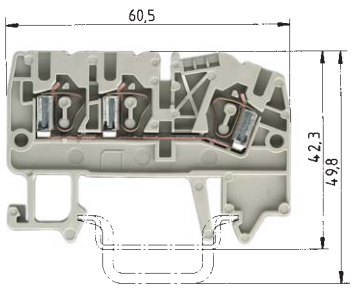

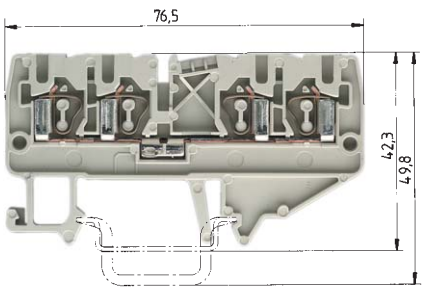

		WKF 2.5 D1/2/35			WKF 2.5 D2/2/35		
		fine stranded	solid	V	fine stranded	solid	V
EN 60 947-7-1/DIN VDE 0611 T1		0.13 – 2.5 mm²	0.5 – 4 mm²	800 V/8 kV/3	0.13 – 2.5 mm²	0.5 – 4 mm²	800 V/8 kV/3
UL ratings	field/factory wiring	No. 22-12 AWG		600 V	No. 22-12 AWG		600 V
CSA ratings		No. 24-12 AWG		600 V	No. 24-12 AWG		600 V
Width	Wire strip length	5 mm		11 mm	5 mm		11 mm
Approvals		SEV-EEX RINA LR LCIE BV * **			SEV-EEX RINA LR LCIE BV * **		

		Type	Part no.	Std. pack	Type	Part no.	Std. pack
Duo feed-through block 1/2	Color: gray	WKF 2,5/D1/2/35	56.703.5053.0	100			
	Color: blue	WKF 2,5/D1/2/35 BLAU	56.703.5053.6	100			
Duo feed-through block 2/2	Color: gray				WKF 2,5/D2/2/35	56.703.5153.0	100
	Color: blue				WKF 2,5/D2/2/35 BLAU	56.703.5153.6	100
Double feed-through block	Color: black						
Accessories							
1. Mounting rail 35, 7.5 high	L = 2 m	35x27x7,5 EN 60715	98.300.0000.0	1	35x27x7,5 EN 60715	98.300.0000.0	1
Mounting rail 35, 15 high	L = 2 m	35x24x15 EN 60715	98.360.0000.0	1	35x24x15 EN 60715	98.360.0000.0	1
2. End clamp TS 35, with screw	8 mm wide	9708/2 S35	Z5.522.8553.0	100	9708/2 S35	Z5.522.8553.0	100
End clamp TS 35, without screw	8 mm wide	WEF 1/35	Z5.523.9353.0	100	WEF 1/35	Z5.523.9353.0	100
3. End plate	Color: gray	APF 2,5 /D1/2	07.312.2353.0	10	APF 2,5 /D2/2	07.312.2553.0	10
	Color: blue	APF 2,5/D1/2 BLAU	07.312.2353.6	10	APF 2,5/D2/2 BLAU	07.312.2553.6	10
4. Partition plate	Color: gray	TWF 2,5/D1/2	07.312.2453.0	10	TWF 2,5/D2/2	07.312.2653.0	10
	Color: blue	TWF 2,5/D1/2 BLAU	07.312.2453.6	10	TWF 2,5/D2/2 BLAU	07.312.2653.6	10
5. Cross connector	2pole	IVB WKF 2,5 – 2	Z7.280.6227.0	10	IVB WKF 2,5 – 2	Z7.280.6227.0	10
insulated (jumper bar)	3pole	IVB WKF 2,5 – 3	Z7.280.6327.0	10	IVB WKF 2,5 – 3	Z7.280.6327.0	10
	4pole	IVB WKF 2,5 – 4	Z7.280.6427.0	10	IVB WKF 2,5 – 4	Z7.280.6427.0	10
	5pole	IVB WKF 2,5 – 5	Z7.280.6527.0	10	IVB WKF 2,5 – 5	Z7.280.6527.0	10
	6pole	IVB WKF 2,5 – 6	Z7.280.6627.0	10	IVB WKF 2,5 – 6	Z7.280.6627.0	10
	7pole	IVB WKF 2,5 – 7	Z7.280.6727.0	20	IVB WKF 2,5 – 7	Z7.280.6727.0	20
	8pole	IVB WKF 2,5 – 8	Z7.280.6827.0	20	IVB WKF 2,5 – 8	Z7.280.6827.0	20
	9pole	IVB WKF 2,5 – 9	Z7.280.6927.0	20	IVB WKF 2,5 – 9	Z7.280.6927.0	20
	10pole	IVB WKF 2,5 – 10	Z7.280.7027.0	20	IVB WKF 2,5 – 10	Z7.280.7027.0	20
6. Wire entry guide	0.13 – 0.2 mm²	LEL 2,5/1 WEISS	05.561.6553.0	100	LEL 2,5/1 WEISS	05.561.6553.0	100
	0.25 – 0.5 mm²	LEL 2,5/2 GRAU	05.561.6653.0	100	LEL 2,5/2 GRAU	05.561.6653.0	100
	0.75 – 1.0 mm²	LEL 2,5/3 SCHWARZ	05.561.6753.0	100	LEL 2,5/3 SCHWARZ	05.561.6753.0	100
7. Cover with warning symbol over 4 blocks		ADF 2,5/4 GELB	04.343.6053.8	10	ADF 2,5/4 GELB	04.343.6053.8	10
8. Screwdriver, uninsulated (jumper bar)		DIN 5264 B 0,6x3,5	06.502.4000.0	5	DIN 5264 B 0,6x3,5	06.502.4000.0	5
9. Test plug with spring connection		PSWKC/F	Z1.299.9753.0		PSWKC/F	Z1.299.9753.0	
End plate / spacer		ZP/APPS	07.312.6053.0		ZP/APPS	07.312.6053.0	
Blank module for staggered testing			01.299.9753.0			01.299.9753.0	
Marking accessories see page 48/49 and page 90/91		* CL I, ZN1, AExe II / **CL I, ZN1, Exe II			* CL I, ZN1, AExe II / **CL I, ZN1, Exe II		

fasis

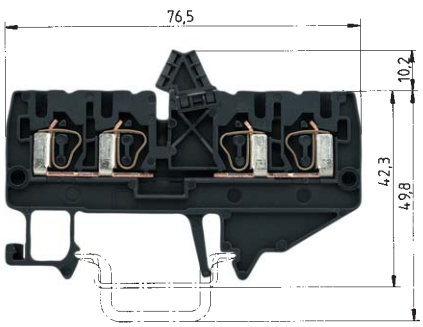

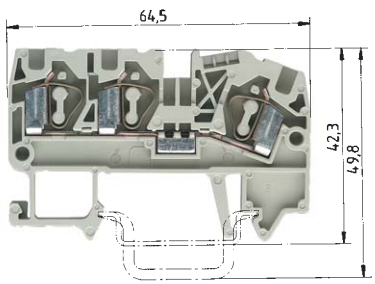

WKF 2.5 D/D/35

fine stranded	solid	V	A
0.13 – 2.5 mm²	0.5 – 4 mm²	800 V/8 kV/3	24
No. 22-12 AWG		600 V	20/30
No. 24-12 AWG		600 V	25
5 mm			11 mm

SEV-EEX RINA LR LCIE BV [1] [2]

WKF 4 D1/2/35

fine stranded	solid	V	A
0.13 – 4 mm²	0.5 – 6 mm²	800 V/8 kV/3	32
No. 22-10 AWG		600 V	30
No. 22-10 AWG		600 V	35
6 mm			11 mm

[1] [2]

Type	Part no.	Std. pack	Type	Part no.	Std. pack
			WKF 4 D1/2/35	56.704.5053.0	100
			WKF 4 D1/2/35 BLAU	56.704.5053.6	100
WKF 2,5/D/D/35	56.703.5253.0	100			
35x27x7,5 EN 60715	98.300.0000.0	1	35x27x7,5 EN 60715	98.300.0000.0	1
35x24x15 EN 60715	98.360.0000.0	1	35x24x15 EN 60715	98.360.0000.0	1
9708/2 S35	Z5.522.8553.0	100	9708/2 S35	Z5.522.8553.0	100
WEF 1/35	Z5.523.9353.0	100	WEF 1/35	Z5.523.9353.0	100
APF 2,5 /D2/2	07.312.2553.0	10	APF 4/D1/2	07.312.4853.0	10
			APF 4/D1/2 BLAU	07.312.4853.6	10
TWF 2,5/D2/2	07.312.2653.0	10	TWF 4/D1/2	07.312.4953.0	10
			TWF 4/D1/2 BLAU	07.312.4953.6	10
			IVB WKF 4 – 2	Z7.261.1227.0	10
			IVB WKF 4 – 3	Z7.261.1327.0	10
			IVB WKF 4 – 4	Z7.261.1427.0	10
			IVB WKF 4 – 5	Z7.261.1527.0	10
			IVB WKF 4 – 6	Z7.261.1627.0	10
			IVB WKF 4 – 7	Z7.261.1727.0	20
			IVB WKF 4 – 8	Z7.261.1827.0	20
			IVB WKF 4 – 9	Z7.261.1927.0	20
			IVB WKF 4 – 10	Z7.261.2027.0	20
LEL 2,5/1 WEISS	05.561.6553.0	100	LEL 4/1 WEISS	05.561.8553.0	100
LEL 2,5/2 GRAU	05.561.6653.0	100	LEL 4/2 GRAU	05.561.8653.0	100
LEL 2,5/3 SCHWARZ	05.561.6753.0	100	LEL 4/3 SCHWARZ	05.561.8753.0	100
ADF 2,5/4 GELB	04.343.6053.8	10	ADF 4/4 GELB	04.343.6153.8	10
DIN 5264 B 0,6x3,5	06.502.4000.0	5	DIN 5264 B 0,6x3,5	06.502.4000.0	5
PSWKC/F	Z1.299.9753.0		PSWKC/F	Z1.299.9753.0	
ZP/APPS	07.312.6053.0		ZP/APPS	07.312.6053.0	
	01.299.9753.0			01.299.9753.0	
[1] CL I, ZN1, Exe II, [2] CL I, ZN1, AExe II			[1] CL I, ZN1, Exe II, [2] CL I, ZN1, AExe II		

Duo ground blocks with spring clamp connection, type *WKF*

fasis

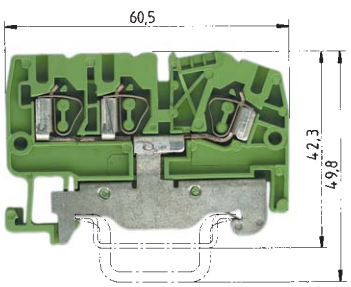

Current carrying capabilities of the mounting rails see catalogue section ***facts*** & DATA

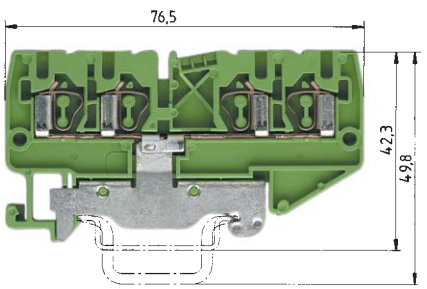

Current carrying capabilities of the mounting rails see catalogue section ***facts*** & DATA

	WKF 2.5 D1/2/SL/35				WKF 2.5 D2/2/SL/35			
	fine stranded	solid	V	A	fine stranded	solid	V	A
EN 60 947-7-1/DIN VDE 0611 T1	0.13 – 2.5 mm²	0.5 – 4 mm²	800 V/8 kV/3	24	0.13 – 2.5 mm²	0.5 – 4 mm²	800 V/8 kV/3	24
UL ratings field/factory wiring	No. 22-12 AWG		600 V		No. 22-12 AWG		600 V	
CSA ratings	No. 24-12 AWG		600 V		No. 24-12 AWG		600 V	
Width Wire strip length	5 mm			11 mm	5 mm			11 mm
Approvals	GL LRS SEV-EEX SEV OVE D N NV FI KEMA KEUR S RINA LR LCIE BV UL * CSA **				GL LRS SEV-EEX SEV OVE D N NV FI KEMA KEUR S RINA LR LCIE BV UL * CSA **			

		Type	Part no.	Std. pack	Type	Part no.	Std. pack
Duo feed-through block 1/2	Color: yellow/green	WKF 2,5/D1/2/SL/35	56.703.9353.0	100			
Duo ground block 2/2	Color: yellow/green				WKF 2,5/D2/2/SL/35	56.703.9153.0	100
Accessories							
1. Mounting rail 35, 7.5 high	L = 2 m	35x27x7,5 EN 60715	98.300.0000.0	1	35x27x7,5 EN 60715	98.300.0000.0	1
Mounting rail 35, 15 high	L = 2 m	35x24x15 EN 60715	98.360.0000.0	1	35x24x15 EN 60715	98.360.0000.0	1
2. End clampTS 35, with screw	8 mm wide	9708/2 S35	Z5.522.8553.0	100	9708/2 S35	Z5.522.8553.0	100
End clamp TS 35, without screw	8 mm wide	WEF 1/35	Z5.523.9353.0	100	WEF 1/35	Z5.523.9353.0	100
3. End plate	Color: grau						
	Color: blue						
	Color: green	APF 2,5 D1/2 GRÜN	07.312.2353.7	10	APF 2,5 D2/2 GRÜN	07.312.2553.7	10
4. Partition plate	Color: gray						
	Color: blue						
5. Cross connector	2pole						
Insulated (jumper bar)	3pole						
	4pole						
	5pole						
	6pole						
	7pole						
	8pole						
	9pole						
	10pole						
6. Wire entry guide	0.13 – 0.2 mm²	LEL 2,5/1 WEISS	05.561.6553.0	100	LEL 2,5/1 WEISS	05.561.6553.0	100
	0.25 – 0.5 mm²	LEL 2,5/2 GRAU	05.561.6653.0	100	LEL 2,5/2 GRAU	05.561.6653.0	100
	0.75 – 1.0 mm²	LEL 2,5/3 SCHWARZ	05.561.6753.0	100	LEL 2,5/3 SCHWARZ	05.561.6753.0	100
7. Cover with warning symbol over 4 blocks		ADF 2,5/4 GELB	04.343.6053.8	10	ADF 2,5/4 GELB	04.343.6053.8	10
8. Screwdriver, uninsulated (jumper bar)		DIN 5264 B 0,6x3,5	06.502.4000.0	5	DIN 5264 B 0,6x3,5	06.502.4000.0	5
		* CL I, ZN1, AExe II / **CL I, ZN1, Exe II			* CL I, ZN1, AExe II / **CL I, ZN1, Exe II		
Marking accessories see page 48/49 and page 90/91		Please see note on page 17!			Please see note on page 17!		

fasis

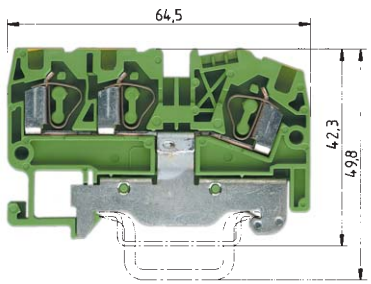

Current carrying capabilities of the mounting rails see catalogue section ***facts*** & DATA

WKF 4 D1/2/SL/35

fine stranded	solid	V	A
0.13 – 4 mm²	0.5 – 6 mm²	800 V/8 kV/3	32
No. 22-10 AWG		600 V	
No. 22-10 AWG		600 V	
6 mm			11 mm

1) 2)

Type	Part no.	Std. pack
WKF 4 D1/2/SL/35	56.704.9353.0	100
35x27x7,5 EN 60715	98.300.0000.0	1
35x24x15 EN 60715	98.360.0000.0	1
9708/2 S35	Z5.522.8553.0	100
WEF 1/35	Z5.523.9353.0	100
APF 4 D1/2 GRÜN	07.312.4853.7	10
LEL 4/1 WEISS	05.561.8553.0	100
LEL 4/2 GRAU	05.561.8653.0	100
LEL 4/3 SCHWARZ	05.561.8753.0	100
ADF 2,5/4 GELB	04.343.6053.8	10
DIN 5264 B 0,6x3,5	06.502.4000.0	5

1) CL I, ZN1, Exe II, 2) CL I, ZN1, AExe II

Please see note on page 17!

Double tier terminals with spring clamp connection, type *WKF*

fasis

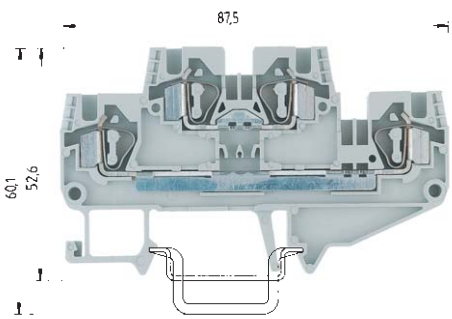

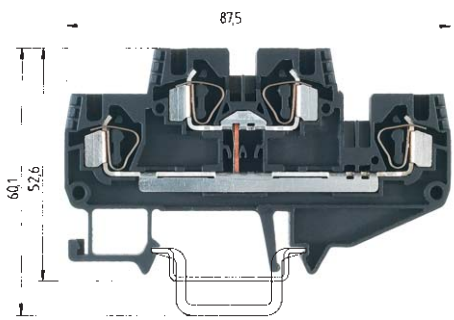

		WKF 4 E/35				WKF 4 E/VB/35			
		fine stranded	solid	V	A	fine stranded	solid	V	A
EN 60 947-7-1		0.13 - 4 mm²	0.13 - 6 mm²	800 V/8 kV/3	32	0.13 - 4 mm²	0,13 - 6 mm²	800 V/8 kV/3	32
UL ratings	field/factory wiring								
CSA ratings									
Width	Wire strip length	6 mm			11 mm	6 mm			11 mm
Approvals		pending				pending			

		Type	Part no.	Std. pack	Type	Part no.	Std. pack
Double Tier	Color: gray	WKF 4 E/35	56.704.7053.0	100			
Double Tier-Branch circuit	Color: black				WKF 4 E/VB/35	56.704.6953.1	100
Double Tier-Ground	Color: green/yellow						
Function Terminal	Color: red						
Function Terminal	Color: orange						
Accessories							
1. Mounting rail 35, 7.5 mm high, solid	L = 2 m	35x27x7,5 EN 60715	98.300.0000.0	1	35x27x7,5 EN 60715	98.300.0000.0	1
Mounting rail 35, 15 mm high, solid	L = 2 m	35x24x15 EN 60715	98.360.0000.0	1	35x24x15 EN 60715	98.360.0000.0	1
2. End clamp TS 35, screwmount	8 mm wide	9708/2 S35	Z5.522.8553.0	100	9708/2 S35	Z5.522.8553.0	100
End clamp TS 35, screwless	8 mm wide	WEF 1/35	Z5.523.9353.0	100	WEF 1/35	Z5.523.9353.0	100
3. End plate	1.5 mm wide	Color: gray	APF 4 E...07.312.5753.0	10	APF 4 E...	07.312.5753.0	10
	1.5 mm wide	Color: blue					
	1.5 mm wide	Color: green					
4. Partition plate	1.5 mm wide	Color: gray	TWF 4 E...07.312.5853.0	10	TWF 4 E...	07.312.5853.0	10
	1.5 mm wide	Color: blue					
5. Cross connector	2pole	IVB WKF 4 – 2	Z7.261.1227.0	10	IVB WKF 4 – 2	Z7.261.1227.0	10
insulated (jumper bar)	3pole	IVB WKF 4 – 3	Z7.261.1327.0	10	IVB WKF 4 – 3	Z7.261.1327.0	10
	4pole	IVB WKF 4 – 4	Z7.261.1427.0	10	IVB WKF 4 – 4	Z7.261.1427.0	10
	5pole	IVB WKF 4 – 5	Z7.261.1527.0	10	IVB WKF 4 – 5	Z7.261.1527.0	10
	6pole	IVB WKF 4 – 6	Z7.261.1627.0	10	IVB WKF 4 – 6	Z7.261.1627.0	10
	7pole	IVB WKF 4 – 7	Z7.261.1727.0	20	IVB WKF 4 – 7	Z7.261.1727.0	20
	8pole	IVB WKF 4 – 8	Z7.261.1827.0	20	IVB WKF 4 – 8	Z7.261.1827.0	20
	9pole	IVB WKF 4 – 9	Z7.261.1927.0	20	IVB WKF 4 – 9	Z7.261.1927.0	20
	10pole	IVB WKF 4 – 10	Z7.261.2027.0	20	IVB WKF 4 – 10	Z7.261.2027.0	20
6. Vertical Jumper	1pole	IVB WKF-V*)	Z7.261.1127.0				
7 Wire entry guide	0.13 – 0.2 mm²	LEL 4/1 WEISS	05.561.8553.0	100	LEL 4/1 WEISS	05.561.8553.0	100
	0.25 – 0.5 mm²	LEL 4/2 GRAU	05.561.8653.0	100	LEL 4/2 GRAU	05.561.8653.0	100
	0.75 – 1.0 mm²	LEL 4/3 SCHWARZ	05.561.8753.0	100	LEL 4/3 SCHWARZ	05.561.8753.0	100
8. Cover with warning symbol for 4 terminals		ADF 4/4 GELB	04.343.6153.8	10	ADF 4/4 GELB	04.343.6153.8	10
9. Screwdriver		DIN 5264 B 0,6x3,5	06.502.4000.0	5	DIN 5264 B 0,6x3,5	06.502.4000.0	5
Screwdriver, MINI		DIN 5264 B 0,6x3,5 M	06.502.5000.0	10	DIN 5264 B 0,6x3,5 M	06.502.5000.0	10
Marking accessories see page 48/49 and page 90/91							

fasis

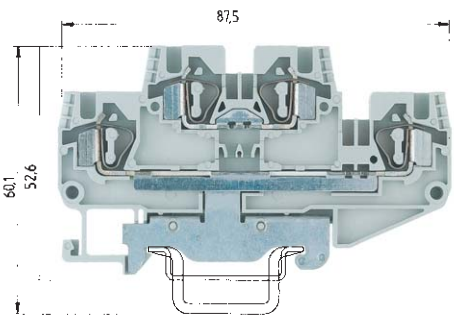

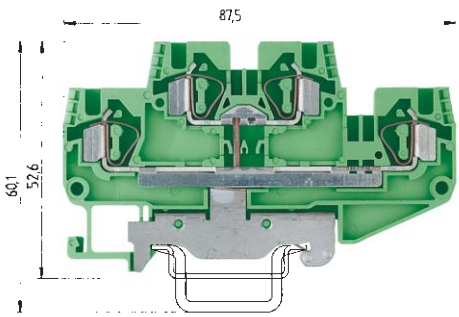

WKF 4 E /D/SL/35

fine stranded	solid	V	A
0.13 - 4 mm²	0.13 - 6 mm²	800 V/8 kV/3	32

6 mm 11 mm

pending

WKF 4 E SL/35

fine stranded	solid	V	A
0.13 - 4 mm²	0.13 - 6 mm²	800 V/8 kV/3	32

6 mm 11 mm

pending

Type	Part no.	Std. pack	Type	Part no.	Std. pack
WKF 4 E /D/SL/35	56.704.9953.0	100	WKF 4 E SL/35	56.704.9253.0	100
35x27x7,5 EN 60715	98.300.0000.0	1	35x27x7,5 EN 60715	98.300.0000.0	1
35x24x15 EN 60715	98.360.0000.0	1	35x24x15 EN 60715	98.360.0000.0	1
9708/2 S35	Z5.522.8553.0	100	9708/2 S35	Z5.522.8553.0	100
WEF 1/35	Z5.523.9353.0	100	WEF 1/35	Z5.523.9353.0	100
APF 4 E...	07.312.5753.0	10			
			APF 4 E...	07.312.5753.7	10
TWF 4 E...	07.312.5853.0	10			
IVB WKF 4 – 2	Z7.261.1227.0	10			
IVB WKF 4 – 3	Z7.261.1327.0	10			
IVB WKF 4 – 4	Z7.261.1427.0	10			
IVB WKF 4 – 5	Z7.261.1527.0	10			
IVB WKF 4 – 6	Z7.261.1627.0	10			
IVB WKF 4 – 7	Z7.261.1727.0	20			
IVB WKF 4 – 8	Z7.261.1827.0	20			
IVB WKF 4 – 9	Z7.261.1927.0	20			
IVB WKF 4 – 10	Z7.261.2027.0	20			
LEL 4/1 WEISS	05.561.8553.0	100	LEL 4/1 WEISS	05.561.8553.0	100
LEL 4/2 GRAU	05.561.8653.0	100	LEL 4/2 GRAU	05.561.8653.0	100
LEL 4/3 SCHWARZ	05.561.8753.0	100	LEL 4/3 SCHWARZ	05.561.8753.0	100
ADF 4/4 GELB	04.343.6153.8	10	ADF 4/4 GELB	04.343.6153.8	10
DIN 5264 B 0,6x3,5	06.502.4000.0	5	DIN 5264 B 0,6x3,5	06.502.4000.0	5
DIN 5264 B 0,6x3,5 M	06.502.5000.0	10	DIN 5264 B 0,6x3,5 M	06.502.5000.0	10

Double tier blocks
with spring clamp connection, type *WKF*

fasis

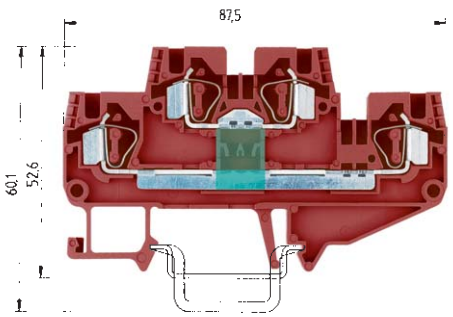

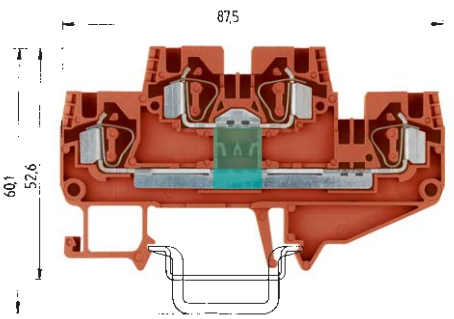

WKF 4 E /35...

		fine stranded	solid	V	A
EN 60 947-7-1		0.13 - 4 mm²	0.13 - 6 mm²		
UL ratings	field/factory wiring				
CSA ratings					
Width	Wire strip length	6 mm			11 mm
Approvals		pending			

			Type	Part no.	Std. pack
Double tier block		Color: gray			
Double tier-Branch circuit		Color: black			
Double tier-Ground		Color: green/yellow			
Function Terminal		Color: red	WKF 4 E /35...	56.704.XX53.5	
Function Terminal		Color: orange	WKF 4 E /35...	56.704.XX53.9	
Accessories					
1. Mounting rail 35,	7.5 mm high	L = 2 m	35x27x7,5 EN 60715	98.300.0000.0	1
Mounting rail 35,	15 mm high	L = 2 m	35x24x15 EN 60715	98.360.0000.0	1
2. End clamp TS 35, with screw		8 mm wide	9708/2 S35	Z5.522.8553.0	100
End clamp TS 35, without screw		8 mm wide	WEF 1/35	Z5.523.9353.0	100
3. End plate	1.5 mm wide	Color: gray	APF 4 E...	07.312.5753.0	10
	1.5 mm wide	Color: blue			
	1.5 mm wide	Color: green			
4. Partition plate	1.5 mm wide	Color: gray	TWF 4 E...	07.312.5853.0	10
	1.5 mm wide	Color: blue			
5. Cross connector		2pole	IVB WKF 4 – 2	Z7.261.1227.0	10
Insulated (jumper bar)		3pole	IVB WKF 4 – 3	Z7.261.1327.0	10
		4pole	IVB WKF 4 – 4	Z7.261.1427.0	10
		5pole	IVB WKF 4 – 5	Z7.261.1527.0	10
		6pole	IVB WKF 4 – 6	Z7.261.1627.0	10
		7pole	IVB WKF 4 – 7	Z7.261.1727.0	20
		8pole	IVB WKF 4 – 8	Z7.261.1827.0	20
		9pole	IVB WKF 4 – 9	Z7.261.1927.0	20
		10pole	IVB WKF 4 – 10	Z7.261.2027.0	20
6. Vertical Jumper		1pole			
7. Wire entry guide		0.13 – 0.2 mm²	LEL 4/1 WEISS	05.561.8553.0	100
		0.25 – 0.5 mm²	LEL 4/2 GRAU	05.561.8653.0	100
		0.75 – 1.0 mm²	LEL 4/3 SCHWARZ	05.561.8753.0	100
8. Cover with warning symbol over 4 blocks			ADF 4/4 GELB	04.343.6153.8	10
9. Screwdriver, uninsulated (jumper bar)			DIN 5264 B 0,6x3,5	06.502.4000.0	5
Screwdriver, uninsulated (jumper bar), MINI			DIN 5264 B 0,6x3,5 M	06.502.5000.0	10
Marking accessories see page 48/49 and page 90/91					

Function Diagram

56.704.7553.9
56.704.7553.5

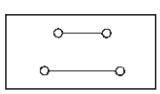

56.704.7153.5
56.704.7153.9

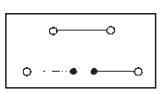

56.704.8053.9

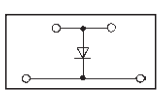

I = 1 A
U = 1000 V

56.704.8253.5

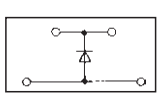

I = 1 A
U = 1000 V

56.704.7953.5

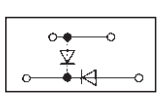

I = 1 A
U = 1000 V

56.704.8353.5

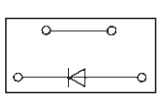

I = 1 A
U = 1000 V

56.704.7453.9
LED red

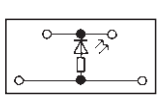

R = 4.7 KΩ
P = 0.5 W
U = 24 V DC

56.704.7253.5
LED red

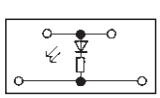

R = 4.7 KΩ
P = 0.5 W
U = 24 V DC

56.704.7353.5

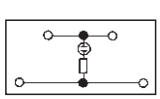

R = 680 KΩ
P = 0.25 W
U = 100-500 V

fasis

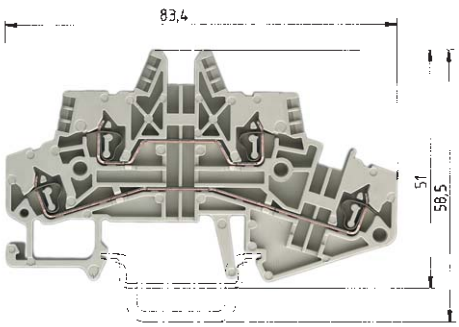

WKF 1.5 E/35

fine stranded	solid	V	A
0.13 – 1.5 mm²	0.13 – 2.5 mm²	400 V/6 kV/3	17.5
30-14 AWG		300 V	15 A
CSA No. 28-14 AWG		600 V	20 A
5 mm			8 mm

* **

Type	Part no.	Std. pack
WKF 1,5 E/35	56.702.7053.0	100
35x27x7,5 EN 60715	98.300.0000.0	1
35x24x15 EN 60715	98.360.0000.0	1
9708/2 S35	Z5.522.8553.0	100
WEF 1/35	Z5.523.9353.0	100
APF 1,5 E	07.312.3553.0	10
TWF 1,5 E	07.312.3653.0	10
IVB WKF 2,5 – 2	Z7.280.6227.0	10
IVB WKF 2,5 – 3	Z7.280.6327.0	10
IVB WKF 2,5 – 4	Z7.280.6427.0	10
IVB WKF 2,5 – 5	Z7.280.6527.0	10
IVB WKF 2,5 – 6	Z7.280.6627.0	10
IVB WKF 2,5 – 7	Z7.280.6727.0	20
IVB WKF 2,5 – 8	Z7.280.6827.0	20
IVB WKF 2,5 – 9	Z7.280.6927.0	20
IVB WKF 2,5 – 10	Z7.280.7027.0	20
IVB WKFC-V*)	Z7.261.1127.0	
LEL 1,5/1 WEISS	05.562.2453.0	100
LEL 1,5/2 GRAU	05.562.2553.0	100
LEL 1,5/3 SCHWARZ	05.562.2653.0	100
ADF 1,5/4 GELB	04.343.8353.8	10
DIN 5264 B 0,6x3,5	06.502.4000.0	5
DIN 5264 B 0,6x3,5 M	06.502.5000.0	10
* CL I, ZN1, AExe II		
**CL I, ZN1, Exe II		

DIN rail terminal blocks with spring clamp connection and pluggable connections

fasis

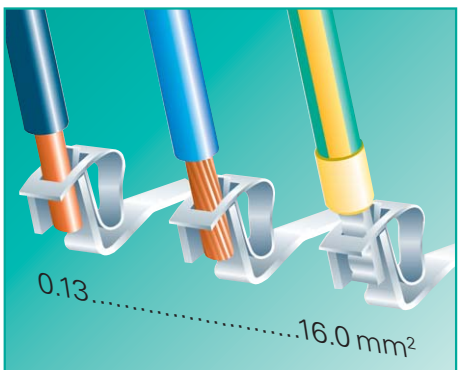

System advantages

❒ **Spring clamp connection,** screwless technology

Separation of electrical and mechanical functions

Application advantages

→ **Dynamic connections**
Protection of the connection against "cold flow" and creep

→ **Pre-programmed clamping force**
The clamping force required to connect the wire, is created by the spring elements of the clamp

→ **Secure and maintenance-free electrical connection**
According to EN 60947-7-1

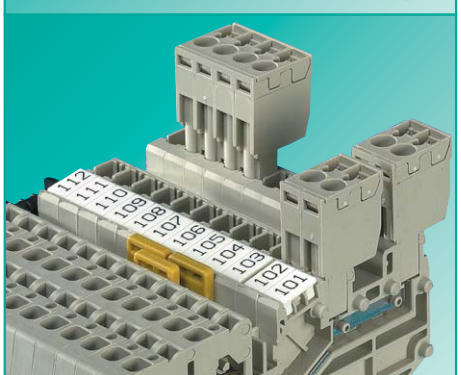

❒ **TOP connection**
Wire entry and screwdriver access in same plane

❒ **Built in Test Points**

❒ **Preassembled modules**

→ **Clear wiring**
In small confined spaces

→ **Test points for test plugs** up to Ø 2.3 mm on all clamping points, without having to remove the connected wire

→ **Reduced downtime** due to quick and easy component replacement

→ **Wiring errors reduced to a minimum**

→ **Cost reduction** in assembly on site

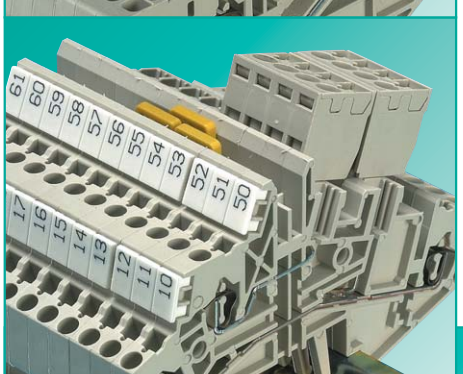

❒ **Pluggable wiring inside the control cabinet**

→ **Time saving due to pluggable accessories**

→ **Flexible potential commoning**

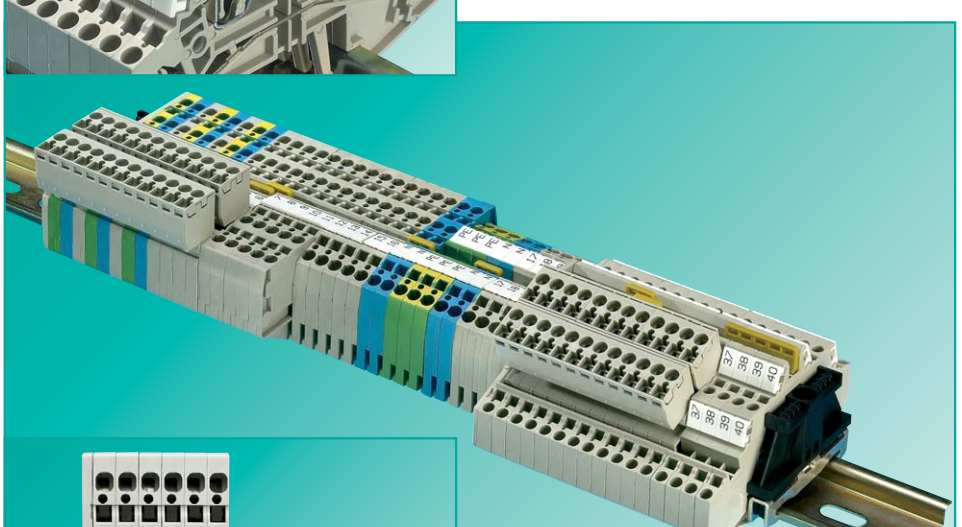

❒ Two versions of DIN rail terminal blocks:

→ WKF 2.5/D2/8113... with 2 inputs and 2 outputs on one potential, only 5 mm wide

→ WKF 2.5 E/8113/35 with 2 input and 2 output with different potentials in double-tier design

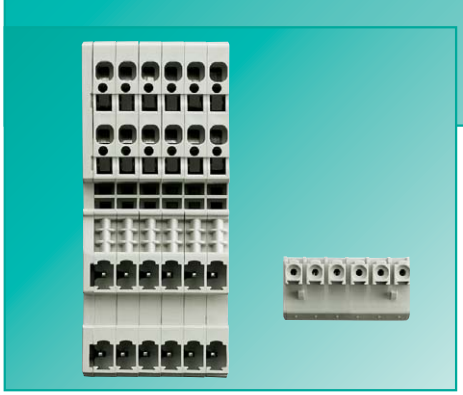

❒ Touch safe

❒ Safety through coding

→ Dead front safety as per IEC 60529 due to shrouded pins on the plug-in side

→ Coding pieces prevents incorrect mating of the pluggable connector

fasis

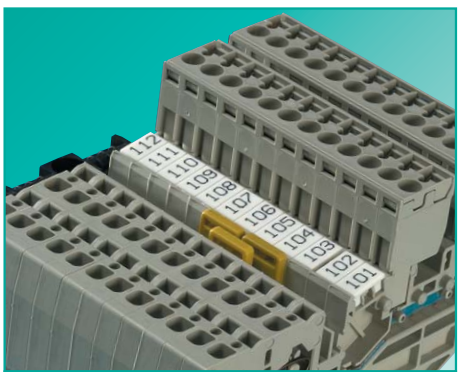

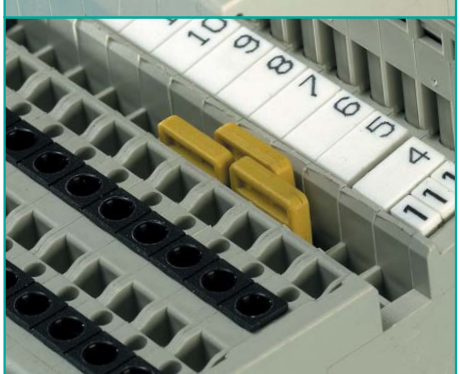

Cross connection (Jumper Bars)

- The insulated cross connectors IVB WKF... are completely touch safe
- No partition plates required between jumpered terminal groups of different potential
- Cross connector IVB WKF 2.5... can bear the same ratied current as the terminal (pg. 17)

Wire entry guides

- For the connection of wires with cross sections smaller than 18 AWG, we recommend the use of wire entry guides
- Wire entry guides prevent the wires from being inserted beyond the optimal clamping point and ensurs a safe and secure connection

Marking systems

- Marking facility is down the center so that the marking tag is not covered by the conductor
- Single marking tag 5, 6, or 8 mm spacing
- Marking strips (10 tags) to snap on to the terminal blocks
- Tear-off marking strips for 3-digit marking facilities per block
- Custom marking upon request

Cover with warning symbol

- Cover with warning symbol ADC to snap on to blocks which are still live after switched-off (VDE 0113)
- Cover can only be removed with a screwdriver

DQS certificates for all products

- Quality standard as per DIN ISO 9001 in Development, Production, Assembly
- Continued control of the quality standard by means of regular internal and external quality audits
- Compatible with certificates of other countries:
  – BSI Certificate, Great Britain
  – SQS Certificate, Switzerland
  – Aib-Vincotte Certificate, Belgium
  – ÖQS Certificate, Austria

Material

- Metal parts

  Special alloys and surface treatments provide low contact resistance and high corrosion resistance

  Clamping spring: stainless CrNi steel

  Current Carrying bar: tin-plated cooper

- Insulating material

  Polyamide has excellent electrical, chemical and mechanical characteristics

  Insulating housing:Polyamide 66/6

  Tracking resistance: CTI 600

  Flammability class: UL 94 V-0

(see also section ***facts*** & DATA)

Our ***wieplan*** software helps to plan your DIN rail terminal block assemblies (see page 10/11).

Note

The information regarding cross-sectional areas and connection types pertains to wires without ferrules. Ferrules are not neccessary for secure connection.

The voltage ratings apply to the terminals in their intended application. When different products are mounted adjacent to each other, the proper isolation distances must be adhered to. For this purpose, **Wieland** offers a large selection of appopriate accessories.

If the ground blocks of the WKF series are not used in block assemblies but are mounted to the rail as single terminal blocks, end clamps have to be used.

A detailed description of technical data, the standards requirements, and the application conditions can be found in catalog section ***facts*** & DATA.

Duo feed-through blocks with pluggable connection

fasis

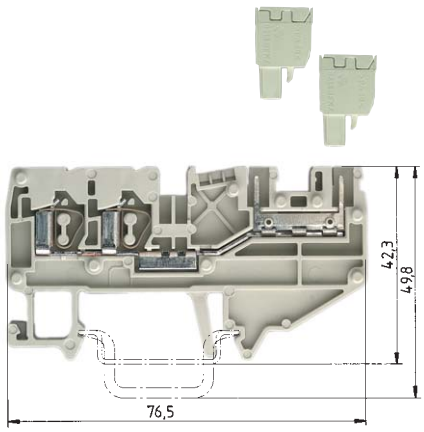

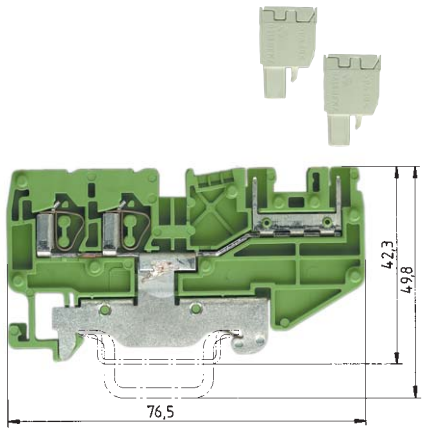

		WKF 2.5 D2/8113/35				WKF 2.5 D2/8113 SL/35			
		fine stranded	solid	V	A	fine stranded	solid	V	A
EN 60 947-7-1/DIN VDE 0611 T1		0.13 – 2.5 mm²	0.13 – 4 mm²	250 V/4 kV/3	16	0.13 – 2.5 mm²	0.13 – 4 mm²	250 V/4 kV/3	16
UL ratings		No. 22-12 AWG		300 V	15	No. 22-12 AWG		300 V	
CSA ratings		No. 24-12 AWG		300 V	15	No. 24-12 AWG		300 V	
Width	Wire strip length	5 mm			11 mm	5 mm			11 mm
Approvals									

		Type	Part no.	Std. pack.	Type	Part no.	Std. pack.
Duo feed-through block	Color: gray	WKF 2,5 D2/8113/35	56.703.2053.0	100			
	Color: blue	WKF 2,5 D2/8113/35 BLAU	56.703.2053.6	100			
Duo ground block	Color: green/yellow				WKF 2,5 D2/8113 SL/35	56.703.9253.0	100
Double-tier block	Color: gray						
Accessories							
1. Mounting rail 35, 7.5 mm high	L = 2 m	35x27x7,5 EN 60715	98.300.0000.0	1	35x27x7,5 EN 60715	98.300.0000.0	1
Mounting rail 35, 15 mm high	L = 2 m	35x24x15 EN 60715	98.360.0000.0	1	35x24x15 EN 60715	98.360.0000.0	1
2. End clamp TS 35, with screw	8 mm wide	9708/2 S35	Z5.522.8553.0	100	9708/2 S35	Z5.522.8553.0	100
End clamp TS 35, screwless	8 mm wide	WEF 1/35	Z5.523.9353.0	100	WEF 1/35	Z5.523.9353.0	100
3. End plate	Color: gray	APF 2,5/D2/8113	07.312.4153.0	10	APF 2,5/D2/8113	07.312.4153.0	10
	Color: blue	APF 2,5/D2/8113	07.312.4153.6	10			
4. Partition plate	Color: gray						
	Color: blue						
5. Cross connector	2pole	IVB WKF 2,5 – 2	Z7.280.6227.0	10			
insulated (jumper bar)	3pole	IVB WKF 2,5 – 3	Z7.280.6327.0	10			
	4pole	IVB WKF 2,5 – 4	Z7.280.6427.0	10			
	5pole	IVB WKF 2,5 – 5	Z7.280.6527.0	10			
	6pole	IVB WKF 2,5 – 6	Z7.280.6627.0	10			
	7pole	IVB WKF 2,5 – 7	Z7.280.6727.0	20			
	8pole	IVB WKF 2,5 – 8	Z7.280.6827.0	20			
	9pole	IVB WKF 2,5 – 9	Z7.280.6927.0	20			
	10pole	IVB WKF 2,5 – 10	Z7.280.7027.0	20			
6. Wire entry guide	0.13 – 0.2 mm²	LEL 2,5/1 WEISS	05.561.6553.0	100	LEL 2,5/1 WEISS	05.561.6553.0	100
	0.25 – 0.5 mm²	LEL 2,5/2 GRAU	05.561.6653.0	100	LEL 2,5/2 GRAU	05.561.6653.0	100
	0.75 – 1.0 mm²	LEL 2,5/3 SCHWARZ	05.561.6753.0	100	LEL 2,5/3 SCHWARZ	05.561.6753.0	100
7. Cover with warning symbol over 4 blocks		ADF 2,5/4 GELB	04.343.6053.8	10	ADF 2,5/4 GELB	04.343.6053.8	10
Cover with warning symbol over 4 poles		AD 8113/4 GELB	04.343.6853.8	10	AD 8113/4 GELB	04.343.6853.8	10
8. Screwdriver, uninsulated		DIN 5264 B 0,6x3,5	06.502.4000.0	5	DIN 5264 B 0,6x3,5	06.502.4000.0	5
9. Coding strip			05.561.0053.0	100		05.561.0053.0	100
10. Test plug with sping connection		PSWKC/F	Z1.299.9753.0		PSWKC/F	Z1.299.9753.0	
End plate / spacer		ZP/APPS	07.312.6053.0		ZP/APPS	07.312.6053.0	
Blank module for staggered testing			01.299.9753.0			01.299.9753.0	
Marking accessories see page 48/49 and page 90/91					Please see note on page 17!		

Pluggable connector

Spring clamp system

5 mm spacing **2.5 mm²**

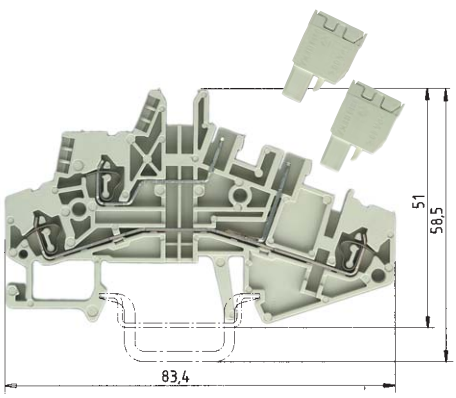

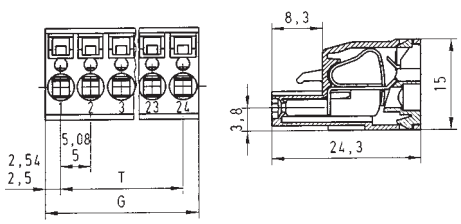

WKF 1.5 E/8113/35

fine stranded	solid	V	A
0.13 – 1.5 mm²	0.13 – 2.5 mm²	250 V/4 kV/3	16
No. 22-14		300 V	15
No. 24-14			
5 mm			8 mm

Rated voltages: VDE 0110/01.89

250 V/4 kV/3 – Overvoltage category III
400 V/4 kV/2 – Overvoltage category II
1000 V/4 kV/1 – Overvoltage category I
CSA No. 22-12 AWG 300 V 12 A

Rated current: 12 A

Type 8113 BFK

fine stranded	solid	V	A
0.13 – 2.5 mm²	0.13 – 4 mm²		12
22-12 AWG		300 V	12
22-12 AWG		300 V	12
5 mm			9 mm

Type	Part no.	Std. pack.	Std. pack.	G	T	Pole	Part no. unmarked	Part no. marked
			5 mm pitch				unmarked	marked
			100	10.00	5.00	2	25.820.3253.0	25.820.0253.0
WKF 1,5 E/8113/35	56.702.2053.0	100	100	15.00	10.00	3	25.820.3353.0	25.820.0353.0
			50	20.00	15.00	4	25.820.3453.0	25.820.0453.0
			50	25.00	20.00	5	25.820.3553.0	25.820.0553.0
35x27x7,5 EN 60715	98.300.0000.0	1	50	30.00	25.00	6	25.820.3653.0	25.820.0653.0
35x24x15 EN 60715	98.360.0000.0	1	50	35.00	30.00	7	25.820.3753.0	25.820.0753.0
9708/2 S35	Z5.522.8553.0	100	50	40.00	35.00	8	25.820.3853.0	25.820.0853.0
WEF 1/35	Z5.523.9353.0	100	50	45.00	40.00	9	25.820.3953.0	25.820.0953.0
APF 1,5/E/8113	07.312.4753.0	10	50	50.00	45.00	10	25.820.4053.0	25.820.1053.0
			50	55.00	50.00	11	25.820.4153.0	25.820.1153.0
			50	60.00	55.00	12	25.820.4253.0	25.820.1253.0
			50	65.00	60.00	13	25.820.4353.0	25.820.1353.0
IVB WKF 2,5 – 2	Z7.280.6227.0	10	50	70.00	65.00	14	25.820.4453.0	25.820.1453.0
IVB WKF 2,5 – 3	Z7.280.6327.0	10	50	75.00	70.00	15	25.820.4553.0	25.820.1553.0
IVB WKF 2,5 – 4	Z7.280.6427.0	10	50	80.00	75.00	16	25.820.4653.0	25.820.1653.0
IVB WKF 2,5 – 5	Z7.280.6527.0	10	17- to 24-pole configurations upon request					
IVB WKF 2,5 – 6	Z7.280.6627.0	10						
IVB WKF 2,5 – 7	Z7.280.6727.0	20						
IVB WKF 2,5 – 8	Z7.280.6827.0	20						
IVB WKF 2,5 – 9	Z7.280.6927.0	20						
IVB WKF 2,5 – 10	Z7.280.7027.0	20						
LEL 1,5/1 WEISS	05.562.2453.0	100						
LEL 1,5/2 GRAU	05.562.2553.0	100						
LEL 1,5/3 SCHWARZ	05.562.2653.0	100						
ADF 2,5/4 GELB	04.343.6053.8	10					DIN 5264 B 0,6x3,5 06.502.4000.0	5
AD 8113/4 GELB	04.343.6853.8	10					05.561.9153.0	100
DIN 5264 B 0,6x3,5	06.502.4000.0	5						
	05.561.0053.0	100						
PSWKC/F	Z1.299.9753.0							
ZP/APPS	07.312.6053.0							
	01.299.9753.0							

Disconnect blocks
with spring clamp connection, type *WKF*

fasis

Fuse plug:

Nominal voltage: 250 V ~ to VDE 0820 T2/IEC 257
Nominal current: – 6.3 A for single blocks
– 4 A for neighbouring blocks

Max. power loss of the fuse insert: 1.6 W
Indicator (24 V): LED color red
current consumption: 10.3 mA
Indicator (110 - 220 V): LED color red
current consumption: 0.3 mA

*) The current load is determined by the fuse. The voltage range is determined by the built-in LED.

**) The current load is determined by the component installed

***) For use with 5 x 20 mm fuses

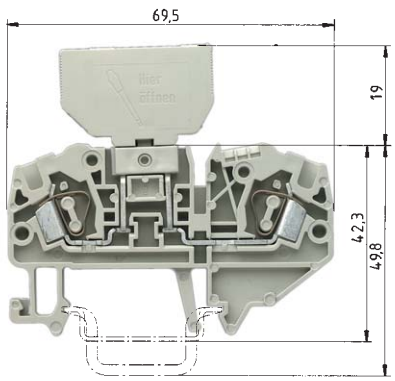

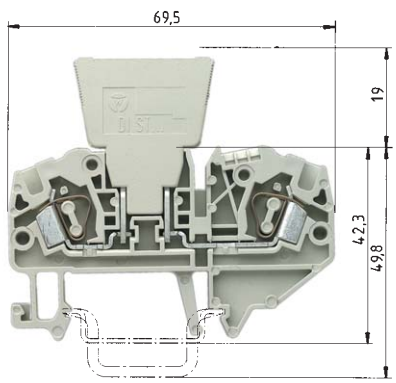

Periodic peak voltage 1000 V							
Direction of the diode:	Anode	Cathode[1)]					
	Cathode	Anode[2)]					
			WKF 4 TKG/35 with fuse holder			**WKF 4 TKG/35 with diode plug**	
			fine stranded	solid	V	fine stranded	solid	V
EN 60 947-7-1, EN 60 127-6			0.13 – 4 mm²	0.13 – 6 mm²	800 V/8 kV/3*)	0.13 – 4 mm²	0.13 – 6 mm²	800 V/8 kV/3
UL ratings			No. 22-10 AWG		600 V	No. 22-10 AWG		600 V
CSA ratings			No. 22-10 AWG		300 V	No. 22-10 AWG		600 V
Width		Wire strip length	6 mm			6 mm		
Approvals								

		Type	Part no.	Std. pack.	Type	Part no.	Std. pack.
Disconnect block	Color: gray	WKF 4 TKG/35	56.704.4053.0	100	WKF 4 TKG/35	56.704.4053.0	100
Fuse holder for fuse 5 x 20	Color: gray	Si ST	Z1.299.4055.0				
Fuse holder with indicator (24 V)	Color: gray	Si ST LED	Z1.299.4155.0	10			
Fuse holder with indicator (110 - 220 V)	Color: gray	Si ST GL	Z1.299.4255.0				
Diode plug – empty J_{max} = 10 A	Color: gray				DIST ...	Z1.299.3055.0	
Diode plug – diode J_{max} = 1 A	Color: gray				DIST-1 N 4007-1[1)]	Z1.299.3155.0	
Diode plug – diode J_{max} = 1 A	Color: gray				DIST-1 N 4007-2[2)]	Z1.299.3355.0	
Diode plug with jumper J_{max} = 10 A	Color: gray				DIST-D	Z1.299.3255.0	
Accessories							
1. Mounting rail 35, 7.5 mm high	L = 2 m	35x27x7,5 EN 60715	98.300.0000.0	1	35 x 27 x 7,5 EN 60715	98.300.0000.0	1
Mounting rail 35, 15 mm high	L = 2 m	35x24x15 EN 60715	98.360.0000.0	1	35 x 24 x 15 EN 60715	98.360.0000.0	1
Mounting rail 35, 15 mm high	L = 2 m	35 x 27 x 15	98.370.0000.0	1	35 x 27 x 15	98.370.0000.0	1
2. End clamp TS 35, with screw	8 mm wide	9708/2 S35	Z5.522.8553.0	100	9708/2 S35	Z5.522.8553.0	100
End clamp TS 35, screwless	8 mm wide	WEF 1/35	Z5.523.9353.0	100	WEF 1/35	Z5.523.9353.0	100
3. End plate	Color: gray	APF 4 TK	07.312.2853.0	10	APF 4 TK	07.312.2853.0	10
4. Partition plate							
5. Cross connector	2pole	IVB WKF 4-2	Z7.261.1227.0	10	IVB WKF 4-2	Z7.261.1227.0	10
insulated (jumper bar)	3pole	IVB WKF 4-3	Z7.261.1327.0	10	IVB WKF 4-3	Z7.261.1327.0	10
	4pole	IVB WKF 4-4	Z7.261.1427.0	10	IVB WKF 4-4	Z7.261.1427.0	10
	5pole	IVB WKF 4-5	Z7.261.1527.0	10	IVB WKF 4-5	Z7.261.1527.0	10
	6pole	IVB WKF 4-6	Z7.261.1627.0	10	IVB WKF 4-6	Z7.261.1627.0	10
	7pole	IVB WKF 4-7	Z7.261.1727.0	20	IVB WKF 4-7	Z7.261.1727.0	20
	8pole	IVB WKF 4-8	Z7.261.1827.0	20	IVB WKF 4-8	Z7.261.1827.0	20
	9pole	IVB WKF 4-9	Z7.261.1927.0	20	IVB WKF 4-9	Z7.261.1927.0	20
	10pole	IVB WKF 4-10	Z7.261.2027.0	20	IVB WKF 4-10	Z7.261.2027.0	20
6. Wire entry guide	0.13 – 0.2 mm²	LEL 4/1 WEISS	05.561.8553.0	100	LEL 4/1 WEISS	05.561.8553.0	100
	0.25 – 0.5 mm²	LEL 4/2 GRAU	05.561.8653.0	100	LEL 4/2 GRAU	05.561.8653.0	100
	0.75 – 1.0 mm²	LEL 4/3 SCHWARZ	05.561.8753.0	100	LEL 4/3 SCHWARZ	05.561.8753.0	100
7. Cover with warning symbol over 4 blocks		ADF 4/4 GELB	04.343.6153.8	10	ADF 4/4 GELB	04.343.6153.8	10
8. Screwdriver, uninsulated		DIN 5264 B 0,6x3,5	06.502.4000.0	5	DIN 5264 B 0,6 x 3,5	06.502.4000.0	5
Marking accessories see page 48/49 and page 90/91							

Knife edge disconnect block with spring clamp connection, type *WKF*

The disconnecting knife in these WKF versions swing in and out on a pivot point. The distinctive color of the disconnecting lever signals the open state. The terminals can be connected with the lever open or closed.

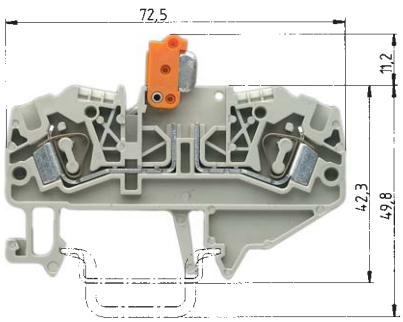

WKF 4 TKM/35

		fine stranded	solid	V	A
EN 60 947-7-1/DIN VDE 0611 T1		0.13 – 4 mm²	0.13 – 6 mm²	800 V/8 kV/3	16
UL ratings		No. 22-10 AWG		600 V	20
CSA ratings		No. 22-10 AWG		600 V	20
Width	Wire strip length	6 mm			11 mm
Approvals					

		Type	Part no.	Std. pack.
Knife edge disconnect block	Color: gray	WKF 4 TKM/35	56.704.2053.0	100
Accessories				
1. Mounting rail 35, 7.5 mm high	L = 2 m	35x27x7,5 EN 60715	98.300.0000.0	1
Mounting rail 35, 15 mm high	L = 2 m	35x24x15 EN 60715	98.360.0000.0	1
Mounting rail 35, 15 mm high	L = 2 m	35 x 27 x 15	98.370.0000.0	1
2. End clamp TS 35	8 mm wide	9708/2 S35	Z5.522.8553.0	100
End clamp TS 35, screwless	8 mm wide	WEF 1/35	Z5.523.9353.0	100
3. End plate	Color: gray	APF 4 TKM	07.312.4353.0	10
4. Partition plate				
5. Cross connector	2pole	IVB WKF 4-2	Z7.261.1227.0	10
insulated (jumper bar)	3pole	IVB WKF 4-3	Z7.261.1327.0	10
	4pole	IVB WKF 4-4	Z7.261.1427.0	10
	5pole	IVB WKF 4-5	Z7.261.1527.0	10
	6pole	IVB WKF 4-6	Z7.261.1627.0	10
	7pole	IVB WKF 4-7	Z7.261.1727.0	20
	8pole	IVB WKF 4-8	Z7.261.1827.0	20
	9pole	IVB WKF 4-9	Z7.261.1927.0	20
	10pole	IVB WKF 4-10	Z7.261.2027.0	20
6. Wire entry guide	0.13 - 0.2 mm²	LEL 4/1 WEISS	05.561.8553.0	100
	0.25 - 0.5 mm²	LEL 4/2 GRAU	05.561.8653.0	100
	0.75 - 1.0 mm²	LEL 4/3 SCHWARZ	05.561.8753.0	100
7. Cover with warning symbol over 4 blocks		ADF 4/4 GELB	04.343.6153.8	10
8. Screwdriver, uninsulated		DIN 5264 B 0,6x3,5	06.502.4000.0	5

Mini spring terminals, type *WKMF*

fasis MINI

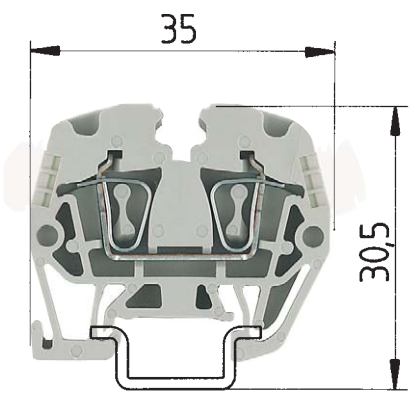

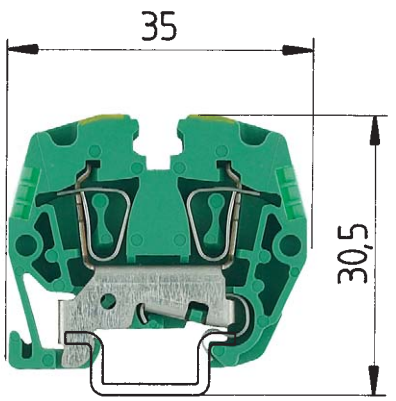

		WKMF 2.5/15				WKMF 2.5 SL/15			
		fine stranded	solid	V	A	fine stranded	solid	V	A
EN 60 947-7-1		0.13 – 2.5 mm²	0.13 – 2.5 mm²	500 V/6kV/3	24	0.13 – 2.5 mm²	0.13 – 2.5 mm²	500 V/6kV/3	24
UL ratings	field/factory wiring	No. 26-12 AWG		600 V	20	No. 26-12 AWG		600 V	20
CSA ratings		No. 26-12 AWG		300 V	20	No. 26-12 AWG		300 V	20
Width	Wire strip length	5 mm			10 mm	5 mm			10 mm
Approvals		pending				pending			

			Type	Part no.	Std. pack.	Type	Part no.	Std. pack.
Feed-through terminal		Color: gray	WKMF 2,5/15	55.703.0053.0				
Feed-through terminal		Color: blue	WKMF 2,5/15	55.703.0053.6				
Ground terminal		Color: green/yellow				WKMF 2,5 SL/15	55.703.9053.0	
Accessories								
1. Mounting rail 15, 5.5 mm high		L = 2 m	9021/15x5,5 EN 60715	98.090.0015.0	10	9021/15x5,5 EN 60715	98.090.0015.0	10
2. End clamp TS 15, metal		7.5 mm wide	9222	Z5.522.5010.0	100	9222	Z5.522.5010.0	100
End clamp TS 15, polyamide		7.5 mm wide	9208 S 15	Z5.522.7553.0	100	9208 S 15	Z5.522.7553.0	100
3. End plate	1.5 mm wide	Color: gray	APMF 2,5 /15	07.312.5953.0		APMF 2,5 /15	07.312.5953.0	
	1.5 mm wide	Color: blue						
	1.5 mm wide	Color: green						
4. Partition plate	1.5 mm wide	Color: gray						
	1.5 mm wide	Color: blue						
5. Cross connector	2pole	IVB WKMF 2,5 – 2	Z7.260.0229.0					
insulated (jumper bar)		3pole	IVB WKMF 2.5 – 3	Z7.260.0329.0				
		4pole	IVB WKMF 2.5 – 4	Z7.260.0429.0				
		5pole	IVB WKMF 2.5 – 5	Z7.260.0529.0				
		6pole	IVB WKMF 2.5 – 6	Z7.260.0629.0				
		7pole	IVB WKMF 2.5 – 7	Z7.260.0729.0				
		8pole	IVB WKMF 2.5 – 8	Z7.260.0829.0				
		9pole	IVB WKMF 2.5 – 9	Z7.260.0929.0				
		10pole	IVB WKMF 2.5 – 10	Z7.260.1029.0				
		50pole	IVB WKMF 2.5 – 10	Z7.260.0029.0				
6. Wire entry guide	0.13 – 0.2 mm²							
	0.25 – 0.5 mm²							
	0.75 – 1.0 mm²							
7. Cover with warning symbol for 4 terminals								
8. Screwdriver, uninsulated			DIN 5264 B 0,6x3,5	06.502.4000.0	5	DIN 5264 B 0,6x3,5	06.502.4000.0	5
Screwdriver, uninsulated, MINI			DIN 5264 B 0,6x3,5 M	06.502.5000.0	10	DIN 5264 B 0,6x3,5 M	06.502.5000.0	10
Marking accessories see page 48/49 and page 90/91								

fasis

Sensor and actuator blocks with spring clamp connection, type *WKF 1.5 KO...*

fasis

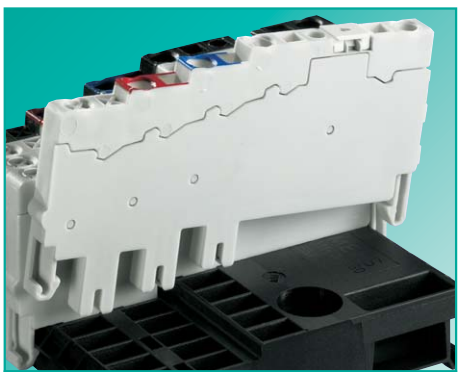

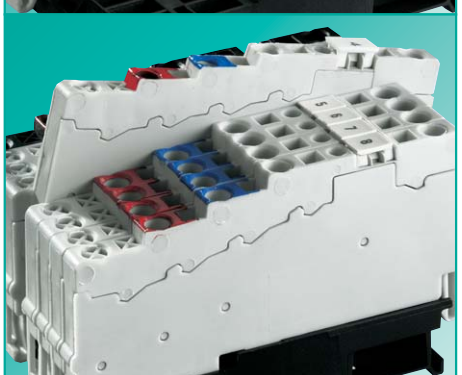

System advantages

- ❒ Built in Bus System on the base module for power distribution (+, –, shield)
- ❒ Separate terminal for power input
- ❒ 35 mm DIN rail or panel mount
- ❒ Individual blocks can be replaced without interrupting power to the other sensor and actuator blocks
- ❒ Clear wiring with TOP connection, even in narrow spaces
- ❒ Compact design

Application advantages

- → Snapping a sensor or actuator terminal into the base module automatically establishes direct contact to the bus bar
- → No external jumper bars required
- → The configuration of the base module matches standard I/O cards of PLC's with 8 or 16 I/O
- → Modifications and expansions can be easily and quickly done
- → Safe and easy connection of sensors and actuators

R 8 sensors or actuators can be terminated in a 45 x 65 mm (1.75" x 2.5") area

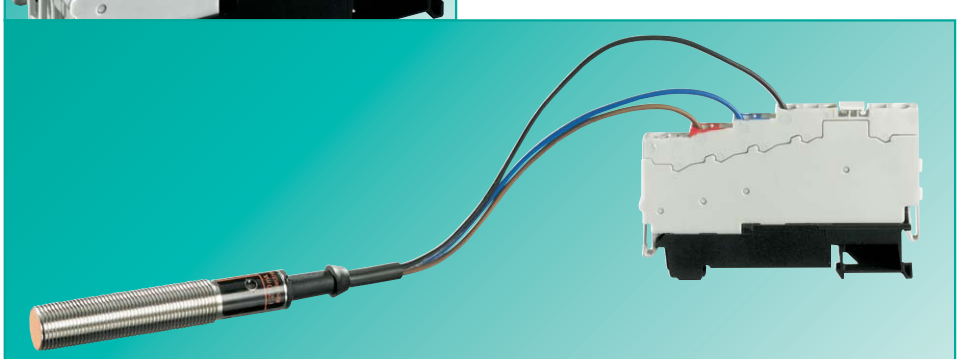

❒ Sensor block WKF 1.5 KOI 3L... for the connection of proximity switches

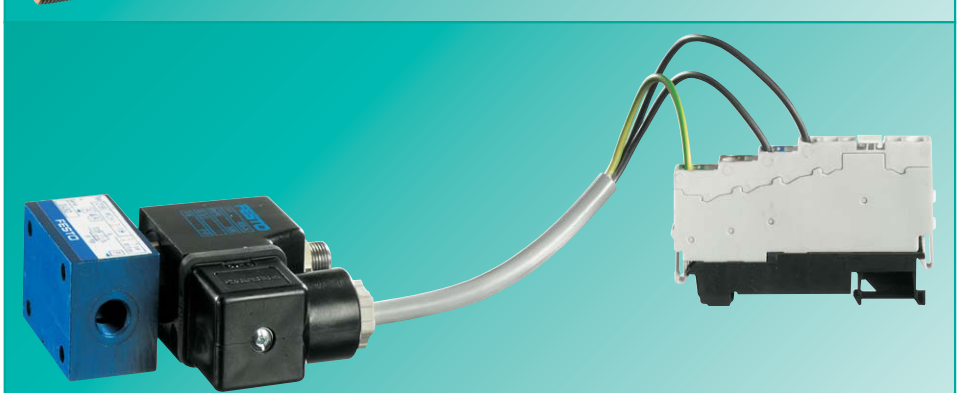

❒ Actuator block WKF 1,5 KOA 2L... for the connection of actuators such as solenoid valves

- ❒ Sensor/Actuator terminals available with yellow LED for switch status indication
- ❒ Power input terminals available with green LED for "Power On" indication

→ Easy maintenance and remote trouble-shooting of the electrical system

fasis

Cross connection (Jumpering)

- ❒ Potential commoning is achieved by snapping the blocks on to the base module
- ❒ Dead front safety covers for unused termination points

Wire entry guides

- ❒ Recommended for wires smaller than 18 AWG

  Prevent the wires from being inserted beyond the optimal clamping point for safe and secure connections

Marking facilities

- ❒ Single marking tag in 5-mm spacing
- ❒ Marking strips (10 single marking tags) to the snap on to the terminal blocks

- ❒ Tear-off marking strips for 3-digit marking facilities per block
- ❒ Custom marking upon request

DQS certificates for all products

- ❒ Quality standard as per DIN ISO 9001 in Development, Production, Assembly
- ❒ Continued control of the quality standard by means of regular internal and external quality audits
- ❒ Compatible with certificates of other countries:
  – BSI Certificate, Great Britain
  – SQS Certificate, Switzerland
  – Aib-Vincotte Certificate, Belgium
  – ÖQS Certificate, Austria

Material

- ❒ Metal parts

  Special alloys and surface treatments provide low contact resistance and high corrosion resistance

  Clamping spring: stainless CrNi steel

  Current Carrying bar: tin-plated copper

- ❒ Insulating material

  Polyamide has excellent electrical, chemical and mechanical characteristics

  Insulating housing: Polyamide 66/6

  Tracking resistance: CTI 600

  Flammability class: UL 94 V-2

(see also section ***facts*** & DATA)

Our ***wieplan*** software helps to plan your DIN rail terminal block assemblies (see page 10/11).

Note

The information regarding cross-sectional areas and connection types pertains to wires without ferrules. Ferrules are not neccessary for secure connection.

The voltage ratings apply to the terminals in their intended application. When different products are mounted adjacent to each other, the proper isolation distances must be adhered to. For this purpose, **Wieland** offers a large selection of appopriate accessories.

A detailed description of technical data, the standards requirements, and the application conditions can be found in catalog section ***facts*** & DATA.

Sensor and actuator blocks with spring clamp connection, type *WKF 1.5 KO...*

fasis

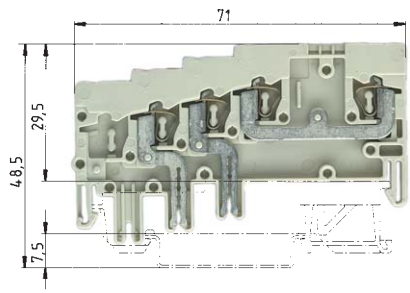

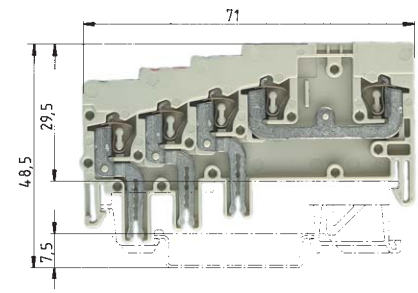

37.702.7453.0
* 65 V/1.,5 kV/3

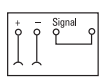

37.702.8453.0
* DC 24 V
same as picture, but with LED

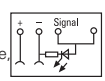

37.702.7553.0
* 65 V/1.5 kV/3

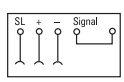

37.702.8553.0
* DC 24 V
same as picture, but with LED

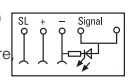

		WKF 1.5 KOI 3L...				WKF 1.5 KOI 3L/SL...			
		fine stranded	solid	V	A	fine stranded	solid	V	A
EN 60 947-7-1/DIN VDE 0611 T1		0.13 – 1.5 mm²	0.13 – 1.5 mm²	*	10	0.13 – 1.5 mm²	0.13 – 1.5 mm²	*	10
UL ratings	field/factory wiring								
CSA ratings		No. 28-16 AWG			65 V	No. 28-16 AWG			65 V
Width	Wire strip length	10 A				10 A			
Approvals		5 mm			10 mm	5 mm			10 mm

		Type	Part no.	Std. pack.	Type	Part no.	Std. pack.
Sensor block	Color: gray	WKF 1,5 KOI 3L	37.702.7453.0	50			
Sensor block with LED (PNP)	Color: gray	WKF 1,5 KOI 3L-PGE	37.702.8453.0	50			
Sensor block	Color: gray				WKF 1,5 KOI 3L/SL	37.702.7553.0	50
Sensor block with LED (PNP)	Color: black				WKF 1,5 KOI 3L/SL-PGE	37.702.8553.0	50
Supply block	Color: black						
Supply block with LED	Color: gray						
Actuator block	Color: gray						
Actuator block with LED	Color: gray						
Connection module for 9 blocks	Color: black						
Connection module for 18 blocks	Color: black						
Accessories							
1. Mounting rail 35, 7.5 mm high	L = 2 m	35x27x7,5 EN 60715	98.300.0000.0	1	35x27x7,5 EN 60715	98.300.0000.0	1
Mounting rail 35, 15 mm high	L = 2 m	35x24x15 EN 60715	98.360.0000.0	1	35x24x15 EN 60715	98.360.0000.0	1
2. End clamp TS 35, with screw	8 mm wide	9708/2 S35	Z5.522.8553.0	100	9708/2 S35	Z5.522.8553.0	100
End clamp TS 35, screwless	8 mm wide	WEF 1/35	Z5.523.9353.0	100	WEF 1/35	Z5.523.9353.0	100
3. End plate							
4. Partition plate							
5. Cross connector	2pole						
insulated (jumper bar)	3pole						
	4pole						
	5pole						
	6pole						
	7pole						
	8pole						
	9pole						
	10pole						
6. Wire entry guide	0.13 – 0.2 mm²	LEL 1,5/1 WEISS	05.562.2453.0	100	LEL 1,5/1 WEISS	05.562.2453.0	100
	0.25 – 0.5 mm²	LEL 1,5/2 GRAU	05.562.2553.0	100	LEL 1,5/2 GRAU	05.562.2553.0	100
	0.75 – 1.0 mm²	LEL 1,5/3 SCHWARZ	05.562.2653.0	100	LEL 1,5/3 SCHWARZ	05.562.2653.0	100
7. Cover for connection module							
8. Screwdriver, uninsulated		DIN 5264 B 0,6x3,5	06.502.4000.0	5	DIN 5264 B 0,6x3,5	06.502.4000.0	5
Marking accessories see page 48/49 and page 90/91							

fasis

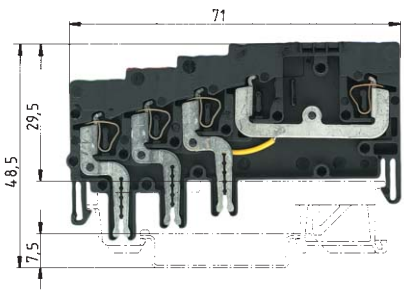

37.702.7753.0
* 65 V/1.5 kV/3

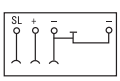

37.702.8753.0
* DC 24 V
same as picture,
but with LED

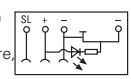

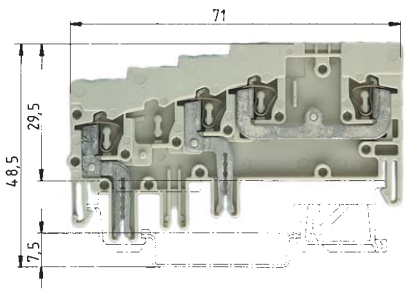

37.702.7653.0
* 65 V/1.5 kV/3

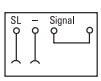

37.702.8653.0
* DC 24 V
same as picture,
but with LED

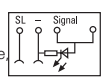

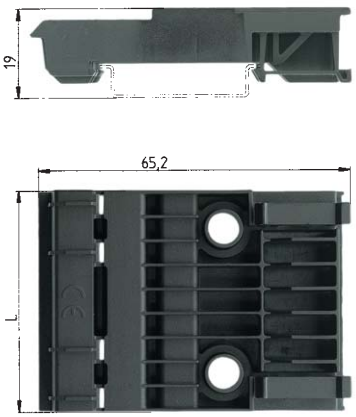

WKF 1.5 KOE...

fine stranded	solid	V	A
0.13 – 1.5 mm²	0.13 – 1.5 mm²	*	10

No. 28-16 AWG 65 V
10 A
5 mm 10 mm

WKF 1.5 KOA 2L...

fine stranded	solid	V	A
0.13 – 1.5 mm²	0.13 – 1.5 mm²	*	10

No. 28-16 AWG 65 V
10 A
5 mm 10 mm

VM WKF...

V	A
*	10
65 V	10 A

9pole module L = 9 x 5 mm + 1.5 mm
18pole module L = 18 x 5 mm + 1.5 mm

Type	Part no.	Std. pack.
WKF 1,5 KOE	37.702.7753.0	50
WKF 1,5 KOE-PGN	37.702.8753.0	50
35x27x7,5 EN 60715	98.300.0000.0	1
35x24x15 EN 60715	98.360.0000.0	1
9708/2 S35	Z5.522.8553.0	100
WEF 1/35	Z5.523.9353.0	100
LEL 1,5/1 WEISS	05.562.2453.0	100
LEL 1,5/2 GRAU	05.562.2553.0	100
LEL 1,5/3 SCHWARZ	05.562.2653.0	100
DIN 5264 B 0,6x3,5	06.502.4000.0	5

Type	Part no.	Std. pack.
WKF 1,5 KOA 2L	37.702.7653.0	50
WKF 1,5 KOA 2L/SL-PGE	37.702.8653.0	50
35x27x7,5 EN 60715	98.300.0000.0	1
35x24x15 EN 60715	98.360.0000.0	1
9708/2 S35	Z5.522.8553.0	100
WEF 1/35	Z5.523.9353.0	100
LEL 1,5/1 WEISS	05.562.2453.0	100
LEL 1,5/2 GRAU	05.562.2553.0	100
LEL 1,5/3 SCHWARZ	05.562.2653.0	100
DIN 5264 B 0,6x3,5	06.502.4000.0	5

Type	Part no.	Std. pack.
VM WKF KO..9	69.700.0953.0	10
VM WKF KO..18	69.700.1853.0	5
35x27x7,5 EN 60715	98.300.0000.0	1
35x24x15 EN 60715	98.360.0000.0	1
9708/2 S35	Z5.522.8553.0	100
WEF 1/35	Z5.523.9353.0	100
AD VM-1,5/8 SCHWARZ	04.343.8053.0	10

Accessories for DIN rail terminal blocks with spring clamp connection, type *WKF*

fasis

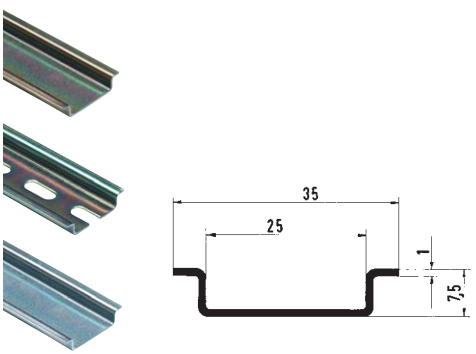

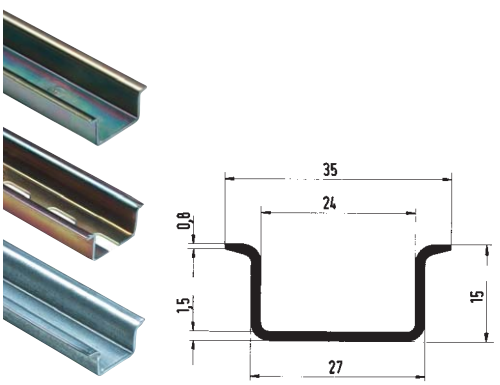

Mounting Rail 35 x 7.5
to standard DIN EN 60715

Mounting Rail 35 x 15
to standard DIN EN 60715

			Type	Part no.	Std. pack.	Type	Part no.	Std. pack.
Mounting Rail								
1. Steel zinc plated, dichromate	solid	L = 2 m	35 x 27 x 7,5 EN 60715	98.300.0000.0	1	35 x 27 x 15 EN 60715	98.370.0000.0	1
Steel zinc plated, dichromate	slotted	L = 2 m	35 x 27 x 7,5 EN 60715	98.300.1000.0	1	35 x 27 x 15 EN 60715	98.370.1000.0	1
2. Steel, unplated	solid	L = 2 m	35 x 27 x 7,5 EN 60715	98.300.0010.0				
Steel, unplated	slotted	L = 2 m						
3. Steel, zinc plated	solid	L = 2 m						
Steel, zinc plated	slotted	L = 2 m						
4. Copper	solid	L = 2 m						
Copper	slotted	L = 2 m						
5. Aluminum	solid	L = 2 m	35 x 27 x 7,5 EN 60715	98.750.0000.0				
Aluminum	slotted	L = 2 m	35 x 27 x 7,5 EN 60715	98.800.1000.0				
6. Stainless steel	solid	L = 2 m	35 x 27 x 7,5 EN 60715	98.330.0000.0				
End clamp								
7. End clamp with screw for 35 mm rail		8 mm wide						
8. End clamp with screw for 35 mm rail								
with marking plate		8/17.5 mm wide						
9. End clamp, screwless, for 35 mm rail		8 mm wide						
10. End clamp, screwless, for 35 mm rail								
with marking plate		8/17.5 mm wide						
for terminal rails								
11. Bus bar holder		8 mm wide						
Busbar support, with screw		8 mm						
12. Clamping screw for mounting rail								
13. Optional label carrier								
14. Paper Markers in perforated sheet form								
(1 sheet = 100 Marking tags)								

fasis

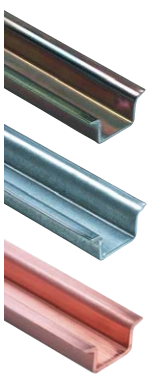

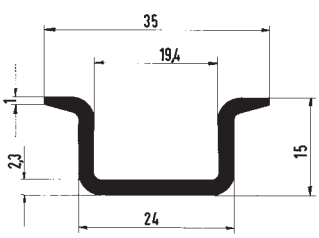

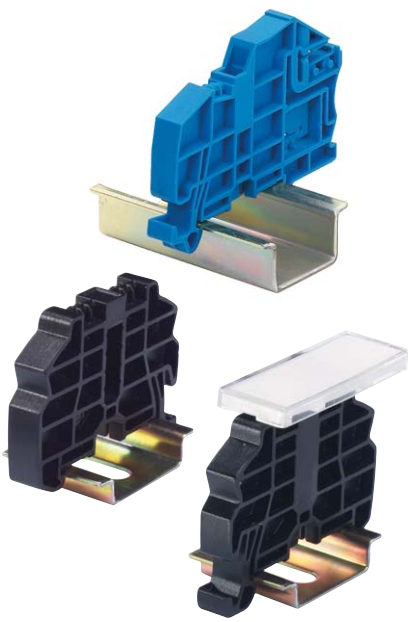

Mounting Rail 35 x 15
to standard DIN EN 60715

Type	Part no.	Std. pack.
35 x 27 x 15 EN 60715	98.360.0000.0	1
35 x 27 x 15 EN 60715 ZN	98.360.0004.0	1
35 x 27 x 15 EN 60715 CU	98.380.0000.0	10

End clamp for TS 35
with screw connection

Type	Part no.	Std. pack.
9708/2 S 35	Z5.522.8553.0	100
9708/2 BS/35	69.920.0553.0	100
	04.019.0289.0	10

End clamp for TS 35
screwless connection

Type	Part no.	Std. pack.
WEF 1/35	Z5.523.9353.0	100
WEF 1 BS/35	69.920.1053.0	100
WKIF SH/E/35	Z1.108.8453.0	10
	69.920.1153.0	
	05.091.0200.0	
BSIR	Z4.243.8453.0	
	04.019.0289.0	10

Marking accessories for DIN rail terminal blocks

fasis

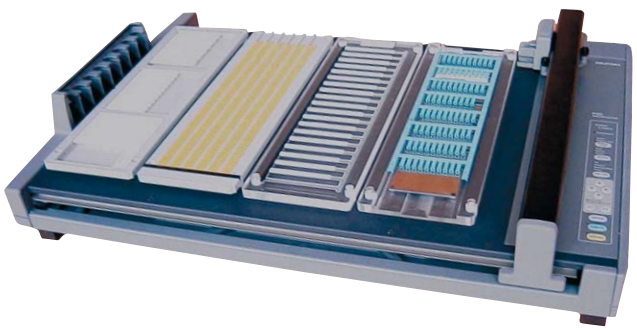

wiemarc

Type	Part no.	Std. pack
wiemarc CD	95.502.0501.0	

Discription

wiemarc is a Windows® based plotter software (Windows 95/98/ME/NT/XP) that is able to drive the following plotter systems:

– ***wieplot*** MUT (Mutoh system)
– Roland system
for custom printing on standard Wieland marking tags.

wiemarc makes preparing data for custom printing easier and faster than ever.
Intuitive handling allows printing of marking tag cards in single, multipole and series marking jobs.
Import of marking data from Excel files, text files and CAD/CAE programs is possible.
wiemarc data file management is user-friendly as printing data can be stored and found very easily in the file library.
wiemarc knows several special characters for electrical marking.
wiemarc is able to mark tags with upward or downward series, series steps can be chosen as well as leading or following characters. Multipole line printing is possible depending on tag size, number of digits and type size. Automatic adaptation of type size according to tag size and number of digits.

Requirements:
Pentium II PC or compatible, min. 200 MHz or higher, 64 MByte RAM, CD-ROM Drive, VGA Grafic Adaptor and Monitor

wiemarc supports Windows 95®, Windows 98®, Windows 2000®, Windows NT®, Windows ME® and Windows XP® Professional.

wieplot MUT

Description

wieplot MUT is a plotter system that uses ***wiemarc*** to interface with a PC, allowing custom printing on standard Wieland marking tags. These standard marking tags provide circuit identification for Wieland DIN rail mount terminal blocks, rectangular multipole connectors and WEB/WEG electronic housings.

Resolution:	0.025 mm
Accuracy:	+/- 0.1 mm
Power supply:	50/60 Hz, 180 – 264 V, 90 – 132 V Automatic switch over from 110 V to 230 V
Power rating:	About 0.3 A for 220 V
Approvals:	UL-UL478 (REV .4) CSA-22.2 No. 220 and VDE EN 60 950
Interference:	FCC Class B FCC Part 15 and VDE Class B
Dimensions:	620 mm x 425 mm x 106.5 mm
Weight:	6.4 kg
Interfaces:	RS-232 C and parallel (Centronics)

Type	Part no.	Std. pack
wieplot MUT	95.502.0601.0	
Standard template for all Wieland tags	95.502.0621.0	

fasis

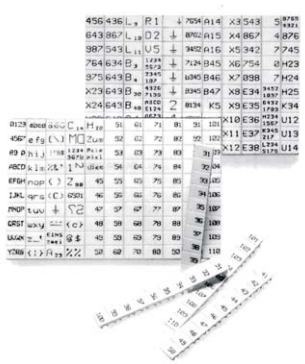

Accessories

	Type	Part no.	Std. pack
Accessory kit consists of plotter pen 0.25 mm,			
Ink-cartridge, permanent plotter pen 0.3 mm and			
cleaning set.			
Accessory kit (pen basic equipment)		95.502.0602.0	
Plotter pens for ROLAND and *wieplot* MUT			
systems:			
Plotter pen 0.18 mm		95.502.0118.0	
Plotter pen 0.25 mm		95.502.0125.0	
Plotter pen 0.35 mm		95.502.0135.0	
Plotter pen 0.50 mm		95.502.0150.0	
Plotter pen 0.70 mm		95.502.0170.0	
Plotter pen 1.00 mm		95.502.0100.0	
Permanent Plotter pen			
0.30 mm black		95.502.0230.0	
0.70 mm black		95.502.0270.0	
Permanent Plotter pen set			
consisting of black, red, blue, green pen.			
set 0.30 mm		95.502.0234.0	
set 0.70 mm		95.502.0274.0	
Hand pens			
Hand pen 0.25 mm		95.502.0425.0	
Hand pen 0.35 mm		95.502.0435.0	
Hand pen 0.50 mm		95.502.0450.0	
Hand pen 0.70 mm		95.502.0470.0	
Ink cartridge P1.0 5 x 1 ml		95.502.0199.0	
Cleaning set		95.502.0198.0	
Pen cleaner		95.502.0197.0	
***wiemarc*-Templates for Wieland cards:**			
for updating existing plotter systems to ***wiemarc***			
for ***marcom* 2000** and Phoenix CMS-System		95.502.0621.0	
for Weidmueller M-Print (Mutoh IP 220)		95.502.0622.0	
for murrplastic ACS (Roland DXY1150A) set high		95.502.0623.0	
for Wago System and murrplastic ACS set low		95.502.0624.0	

Type	Part no.	Std. pack
Marker Cards:		
110 tags per card		
9075 A/5/10/11	Z4.242.5053.0	
60 tags per card		
9705 AL/5/10/6	Z4.242.5153.0	
110 tags per card		
9705 A/6/10/11	Z4.242.6053.0	
60 tags per card		
9705 AL/6/10/6	Z4.242.6153.0	
84 tags per card		
9705 A/6.7/12/7	Z4.242.6753.0*	
36 tags per card		
9705 AL/6.7/12/7	Z4.242.6853.0*	
*must use multi-card template		
9705 A/8/10/7	Z4.242.8053.0*	

	9075A/ 5/10/11	9075AL/ 5/10/6	9075A/ 6/10/11	9075AL/ 6/10/6	9075A/ 6.7/12/7	9075AL/ 6.7/12/7	9075A/ 8/10/7
fasis							
WKF 2.5 ...	X	X					
WKF 4 ...			X	X			
WKF 6 ...					X	X*	X
WKF 10 ...	X*	X*					
WKF 16 ...			X*	X*			
WKMF 2.5 ...	X	X					
taris							
WKC 1 ...	X	X					
WKC 2.5 ...			X	X			
selos							
WK 2.5 ...	X	X					
WK 4 ...			X	X			
WK 6 ...					X+	X+	X
WKN 10 ...	X*	X*					
WKN 16 ...			X*	X*			
WKN 35 ...					X+	X+	X*
WKN 70 ...					X+	X+	
WKM 2.5 ...	X	X					
WKM 4 ...			X	X			
9220 A/6			X	X			
9700 A/5	X	X					
9700 A/6			X	X			
9700 A/8					X+	X+	X
9700 A/10	X*	X*					
9700 A/12			X*	X*			
9700 A/16					X+	X+	

* 2 strips needed for 10 terminals
\+ markers must be mounted individually
Note: the AL-markers are 69% longer that the A-markers
AL/6.7 is twice as long to allow more printing area

Terminal blocks for electrical installations type *WKI*

fasis BIT

fasis

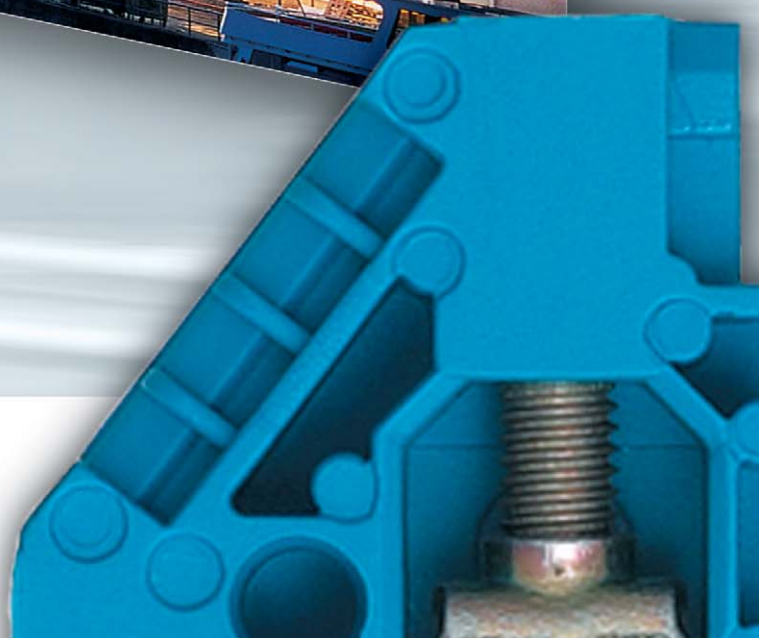

Terminal Blocks

for Electrical Installations, Type *WKI*

Terminal blocks with spring connection for junction boxes

fasis BIT

Terminal blocks for electrical installations 2.5 mm²
(12 AWG)

D | D-D | D-D-SL | N-D-SL | NT-D-SL

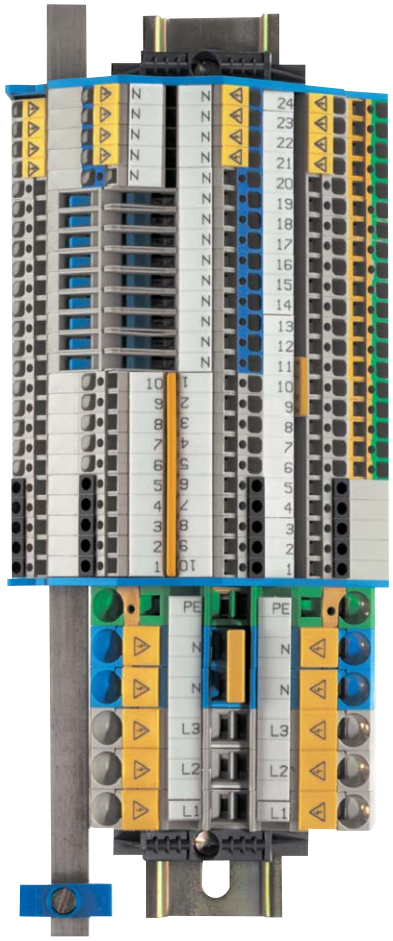

Standard terminal blocks

	4 mm² (10 AWG)	10 mm² (6 AWG)	16 mm² (4 AWG)
Feed-through blocks			
Neutral disconnect blocks	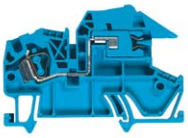		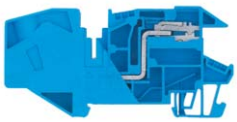
Ground blocks			

Terminal blocks with screw connection for junction boxes

selos BIT

Terminal blocks for electrical installations

4 mm²
(10 AWG)

DU

D-D

D-D-SL

N-D-SL

NT-D-SL

NTN-D-SL

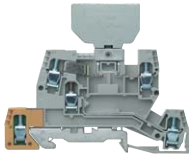
TKG-D-SL

	4 mm² (10 AWG)	10 mm² (6 AWG)	16 mm² (4 AWG)	35 mm² (2 AWG)
Feed-through blocks				
Neutral terminal blocks				
Ground blocks				

Standard terminal blocks

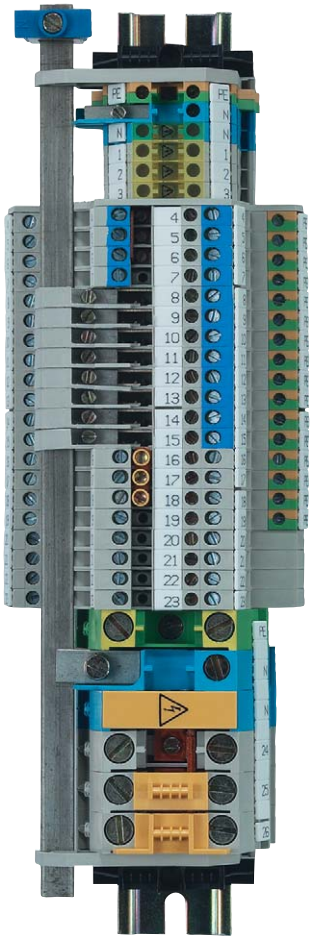

PEN assembly blocks

10 mm² (6 AWG)	16 mm² (4 AWG)	35 mm² (2 AWG)

Terminal blocks for electrical installations with spring connection, type *WKIF*

fasis BIT

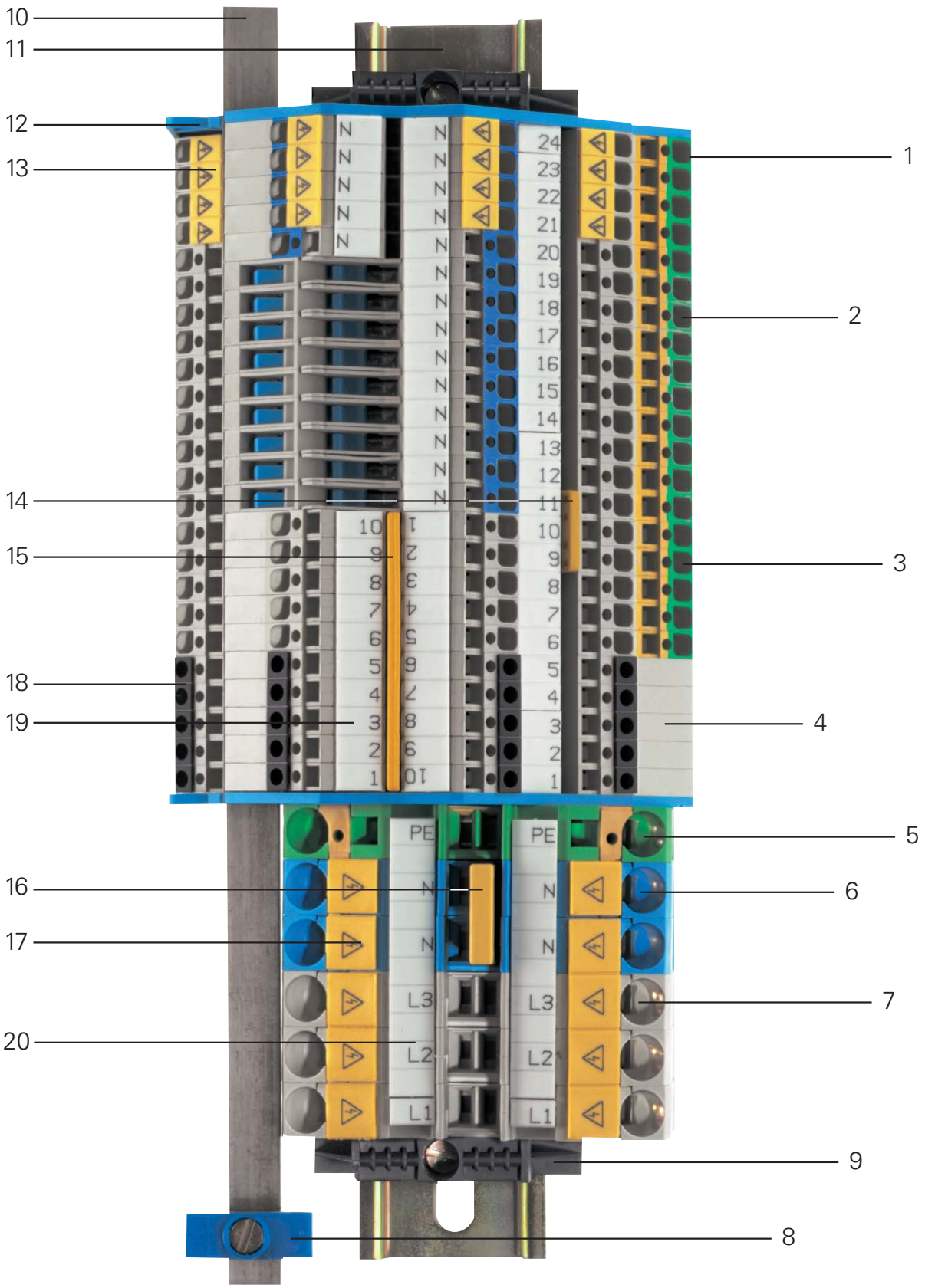

fasis

Item	Description	Type	Part number
1	Installation blocks	WKIF 2.5 N-D-SL	56.703.9453.0
2	Installation blocks	WKIF 2.5 NT-D-SL	56.703.9553.0
3	Installation blocks	WKIF 2.5 D-D-SL	56.703.9853.0
4	Installation blocks	WKIF 2.5 D-D	56.703.9753.0
5	Ground block	WKF 10 SL/35	56.710.9053.0
6	Feed through block	WKF 10/35 BLAU	56.710.0053.6
7	Feed through block	WKF 10/35	56.710.0053.0
8	Connector clamp	WAK 16/2 BLAU	30.494.3021.6
9	End clamp	9708/2 S35	Z5.522.8553.0
10	Busbar 10 x 3	9813 M Sn	98.290.1000.0
11	Mounting rail	35 x 27 x 7.5	98.300.0000.0
12	Busbar support	WKIF/SH/35	01.108.7653.0
13	Cover with warning symbol	ADF 2.5/4 GELB	04.343.6053.8
14	Cross connector, insulated	IVB WKF 2.5–3	Z7.280.6327.0
15	Cross connector, insulated	IVB WKF 2.5–10	Z7.280.7027.0
16	Cross connector, insulated	IVB WKF 10–2	Z7.283.8227.0
17	Cover with warning symbol	ADF 10/4 GELB	04.343.6453.8
18	Wire entry guide	LEL 2.5/3 SCHWARZ	05.561.6753.0
19	Marking strips *	9705 A/5/10 B	04.842.5053.0
20	Marking strips *	9705 A/5/10/5 B	04.842.5553.0

*Custom marking upon request

Terminal blocks for electrical installations with spring connection, type *WKIF*

fasis BIT

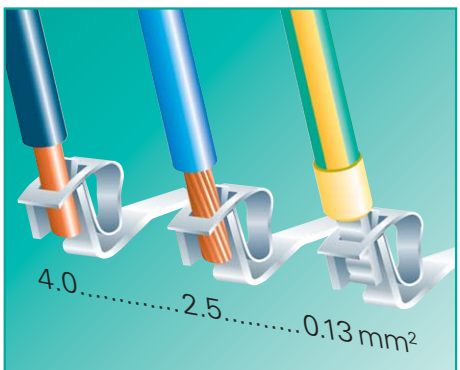

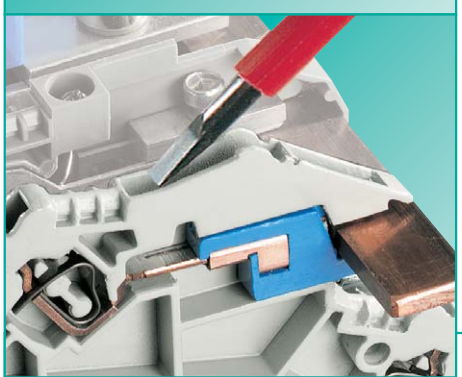

WKIF provides ...

❒ Very convenient operation due to screw-less spring connection

❒ Small package in a three-tier design

❒ Screwless neutral conductor disconnect

Application advantages

→ The TOP connection technique enables easy and safe wiring according to EN 60947-7-1 even in narrow spaces which are difficult to access

→ High density as the installation blocks are only 5mm wide

→ Suited for small junction boxes with cover according to DIN 43871

→ Maintenance-friendly design for after-sales service and inspection

→ Blue indicator shows the state of the neutral circuit

→ Fast and safe disconnection of the neutral conductor with WKIF 2.5 NT-D-SL

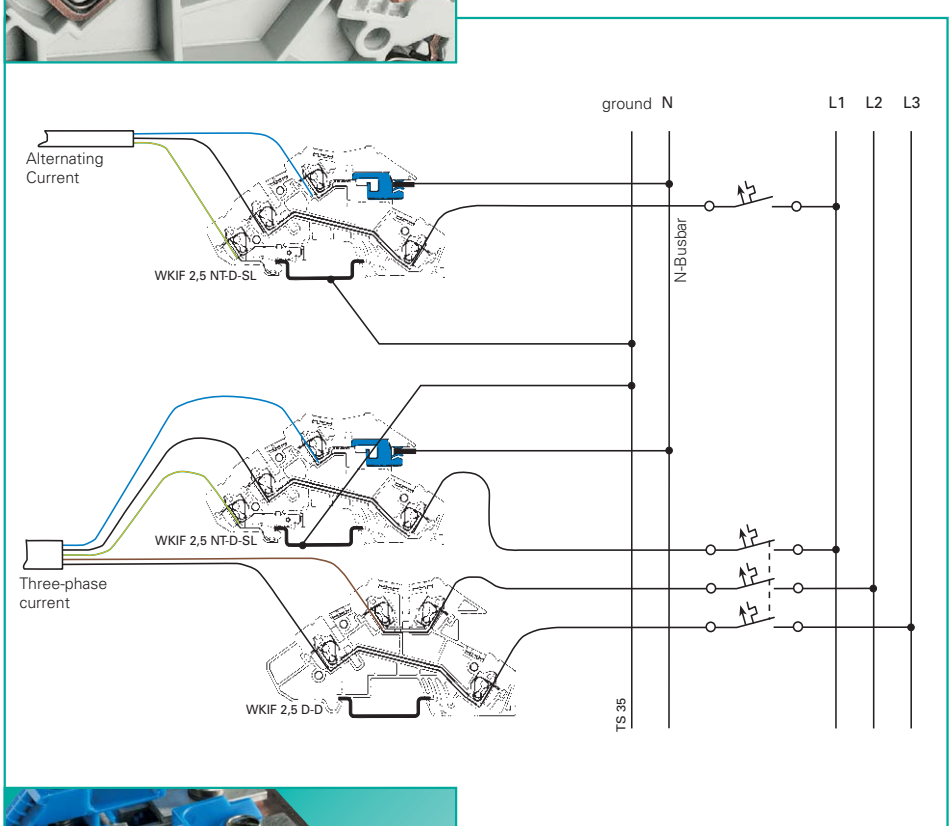

❒ ***fasis*** BIT is designed to meet the wiring and installation requirements of distribution systems in commercial and institutional buildings (such as hospitals, schools, shopping malls, theaters, office buildings, airports) according to VDE 0100 (IEC 60364) and standard control requirements.

❒ WKIF 2.5 NT-D-SL allows the required circuit isolation test without disconnecting the neutral conductor

❒ WKIF offers installation terminal blocks in
5 versions:

WKIF 2.5 D
WKIF 2.5 D-D
WKIF 2.5 D-D-SL
WKIF 2.5 N-D-SL
WKIF 2.5 NT-D-SL

❒ other applications include control wiring. For example, analog signal (+, –, shield) all in one terminal block.

❒ Connection slot on the terminal block for the neutral busbar.

→ The terminal blocks for electrical installations of the WKIF series in the NT version can be combined with ...

...the terminal blocks of the WKI series (screw connection style)

...the neutral disconnect blocks (ETK) of the WKN series (screw connection style)

fasis

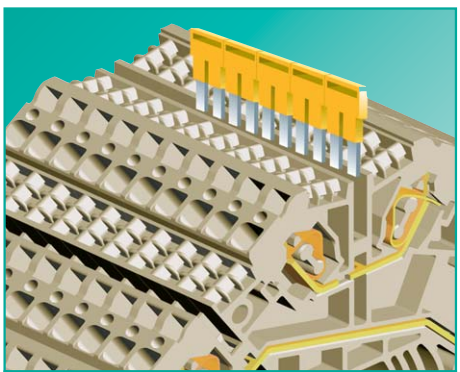

Cross connection

- ❒ Jumpering with insulated cross connector **IVB** WKF 2.5...
- ❒ No partition plates required between adjacent cross connectors
- ❒ Cross connectors **IVB** WKF 2.5... are rated for the same current as the terminal block

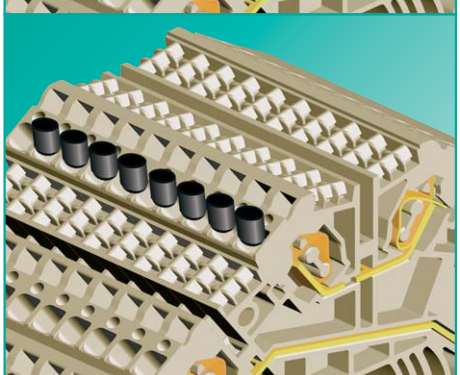

Wire entry guide

- ❒ Wire entry guides **LEL** are recommended when connecting wires with cross sections below 1 mm^2 or 18 AWG
- ❒ Wire entry guides **LEL** prevent the wires from being inserted beyond optimal clamping position and therefore guarantee safe connection

Marking facilities

- ❒ Marking facility is down the center so that the marking tag is not covered by the conductor
- ❒ Tear-off marking strips for 3-digit marking facilities per block
- ❒ Single marking tags in 5 mm spacing
- ❒ Marking strips (10 individual marking tags) to snap on to 10 terminal blocks
- ❒ Custom marking upon request

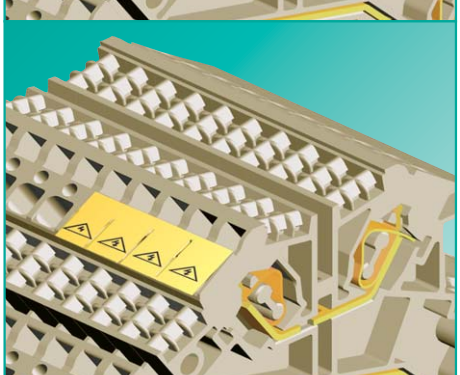

Cover with warning symbol

- ❒ Cover with warning symbol **ADC** to snap on to blocks which remain live when the main switch is disconnected (VDE 0113)
- ❒ Can only be removed with a screwdriver

DQS certificates for all company divisions

- ❒ Quality standard as per DIN ISO 9001 in development, production and assembly
- ❒ Continued control of the quality standard by means of regular internal and external quality audits
- ❒ Compatible with certificates of other countries:
  - BSI Certificate, Great Britain
  - SQS Certificate, Switzerland
  - Aib-Vincotte Certificate, Belgium
  - ÖQS Certificate, Austria

Material

- ❒ Metal parts

  Special alloys enable a low contact resistance and provide a gas-tight contact area

  Clamping spring: stainless CrNi steel

  Current carrying bar: tin-plated copper

- ❒ Insulation material

  Polyamide has excellent electrical, chemical and mechanical characteristics

  Insulating housings: Polyamide 66/6

  Tracking current resistance: CTI 600

  Flammability class: UL 94-V0

  (also see master catalog section ***facts*** & DATA)

You can use our ***wieplan*** software to configure your own terminal block assemblies (see page 10/11).

Note:

The information regarding cross sectional area and connection types pertains to unprepared wires without ferrules.

The voltage ratings apply to the terminals in their intended application. When different products are mounted adjacent to each other, the proper isolation distances must be adhered to. For this purpose, **Wieland** offers a large selection of appropriate accessories.

A detailed description of technical data, the standards' requirements, and the application conditions can be found in part catalog section ***facts*** & DATA: "Technical information".

Terminal blocks for electrical installations, type *WKIF*

fasis BIT

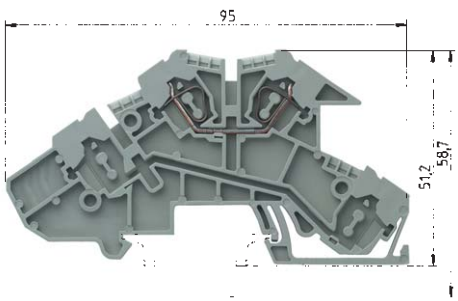

Upper tier equipped only!
D – line feedthrough, upper tier

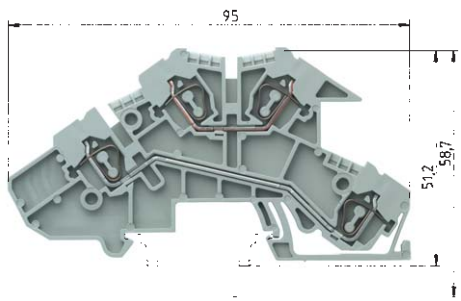

D – line feedthrough
D – line feedthrough

		WKIF 2.5 D			WKIF 2.5 D-D		
		fine stranded	solid	V	fine stranded	solid	V
EN 60947-7-1/DIN VDE 0611 T1		0.13 – 2.5 mm²	0.13 – 4 mm²	400 V/6 kV/3	0.13 – 2.5 mm²	0.13 – 4 mm²	400 V/6 kV/3
UL ratings	field/factory wiring	UL			UL		
CSA ratings		No. 22-12 AWG		300 V	No. 22-12 AWG		300 V
Width	Wire strip length	5 mm		11 mm	5 mm		11 mm
Approvals							

		Type	Part no.	Std. pack	Type	Part no.	Std. pack
Installation block	Color: gray	WKIF 2,5 D	56.703.9653.0	50	WKIF 2,5 D-D	56.703.9753.0	50
Accessories							
1. Mounting rail TS 35, DIN rail 7.5mm high	L = 2 m	35 x 27 x 7,5 EN 60715	98.300.0000.0	1	35 x 27 x 7,5 EN 60715	98.300.0000.0	1
Mounting rail TS 35, DIN rail 15mm high	L = 2 m	35 x 24 x 15 EN 60715	98.360.0000.0	1	35 x 24 x 15 EN 60715	98.360.0000.0	1
2. End clamp for TS 35, with screw	8 mm wide	9708/2 S35	Z5.522.8553.0	100	9708/2 S35	Z5.522.8553.0	100
End clamp for TS 35, without screws	8 mm wide	WEF 1/35	Z5.523.9353.0	100	WEF 1/35	Z5.523.9353.0	100
3. End plate	1.5 mm wide	APIF 2,5	07.311.8353.0	10	APIF 2,5	07.311.8353.0	10
4. Cross connector, insulated jumper bar	2pole	IVB WKF 2,5-2	Z7.280.6227.0	10	IVB WKF 2,5-2	Z7.280.6227.0	10
	3pole	IVB WKF 2,5-3	Z7.280.6327.0	10	IVB WKF 2,5-3	Z7.280.6327.0	10
	4pole	IVB WKF 2,5-4	Z7.280.6427.0	10	IVB WKF 2,5-4	Z7.280.6427.0	10
	5pole	IVB WKF 2,5-5	Z7.280.6527.0	10	IVB WKF 2,5-5	Z7.280.6527.0	10
	6pole	IVB WKF 2,5-6	Z7.280.6627.0	10	IVB WKF 2,5-6	Z7.280.6627.0	10
	7pole	IVB WKF 2,5-7	Z7.280.6727.0	20	IVB WKF 2,5-7	Z7.280.6727.0	20
	8pole	IVB WKF 2,5-8	Z7.280.6827.0	20	IVB WKF 2,5-8	Z7.280.6827.0	20
	9pole	IVB WKF 2,5-9	Z7.280.6927.0	20	IVB WKF 2,5-9	Z7.280.6927.0	20
	10pole*	IVB WKF 2,5-10	Z7.280.7027.0	20	IVB WKF 2,5-10	Z7.280.7027.0	20
5. Wire entry guide	0.13 – 0.2 mm²	LEL 2,5/1 WEISS	05.561.6553.0	100	LEL 2,5/1 WEISS	05.561.6553.0	100
	0.25 – 0.5 mm²	LEL 2,5/2 GRAU	05.561.6653.0	100	LEL 2,5/2 GRAU	05.561.6653.0	100
	0.75 – 1.0 mm²	LEL 2,5/3 SCHWARZ	05.561.6753.0	100	LEL 2,5/3 SCHWARZ	05.561.6753.0	100
6. Cover with warning symbol over 4 blocks		ADF 2,5/4 GELB	04.343.6053.8	10	ADF 2,5/4 GELB	04.343.6053.8	10
7. Busbar, E-Cu 10 x 3 mm, tin-plated	L = 1 m	9813 M Sn	98.290.1000.0	1	9813 M Sn	98.290.1000.0	1
8. Connector clamp for busbar							
16 mm²	8.5 mm wide	WAK 16/2 BLAU	30.494.3021.6	100	WAK 16/2 BLAU	30.494.3021.6	100
35 mm²	17 mm wide	WAK 35/2	30.494.4121.0	50	WAK 35/2	30.494.4121.0	50
9. Busbar support	2 mm wide	WKIF/SH/35	01.108.7653.0	10	WKIF/SH/35	01.108.7653.0	10
Busbar support, as end clamp	8 mm wide	WKIF SH/E/35	Z1.108.8453.0	10	WKIF SH/E/35	Z1.108.8453.0	10
10. Screwdriver, uninsulated		DIN 5264 B 0,6 x 3,5	06.502.4000.0	5	DIN 5264 B 0,6 x 3,5	06.502.4000.0	5

Marking accessories see page 48/49 and page 90/91

*Available up to 20 poles

fasis

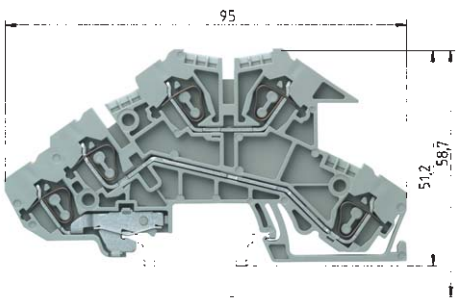

D – line feedthrough
D – line feedthrough
SL – ground

WKIF 2.5 D-D-SL

fine stranded	solid	V	A
0.13 – 2.5 mm²	0.13 – 4 mm²	400 V/250 V/4 kV/3	24
UL			
No. 22-12 AWG		300 V	20
5 mm			11 mm

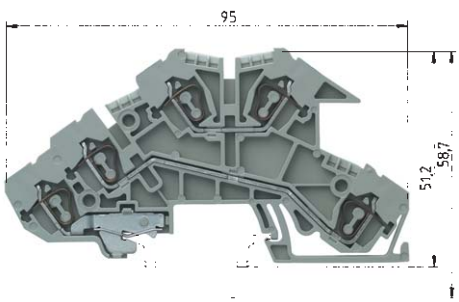

D – line feedthrough
N – neutral feedthrough
SL – ground

WKIF 2.5 N-D-SL

fine stranded	solid	V	A
0.13 – 2.5 mm²	0.13 – 4 mm²	400 V/250 V/4 kV/3	24
UL			
No. 22-12 AWG		300 V	20
5 mm			11 mm

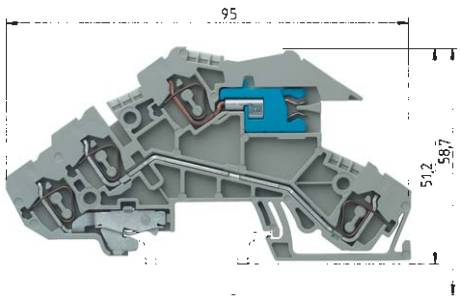

D – line feedthrough
NT – neutral feedthrough, disconnectable
SL – ground

WKIF 2.5 NT-D-SL

fine stranded	solid	V	A
0.13 – 2.5 mm²	0.13 – 4 mm²	400 V/250 V/6 kV/3	20
UL			
No. 22-12 AWG		300 V	20
5 mm			11 mm

Type	Part no.	Std. pack
WKIF 2,5 D-D-SL	56.703.9853.0	50
35 x 27 x 7,5 EN 60715	98.300.0000.0	1
35 x 24 x 15 EN 60715	98.360.0000.0	1
9708/2 S35	Z5.522.8553.0	100
WEF 1/35	Z5.523.9353.0	100
APIF 2,5	07.311.8353.0	10
IVB WKF 2,5-2	Z7.280.6227.0	10
IVB WKF 2,5-3	Z7.280.6327.0	10
IVB WKF 2,5-4	Z7.280.6427.0	10
IVB WKF 2,5-5	Z7.280.6527.0	10
IVB WKF 2,5-6	Z7.280.6627.0	10
IVB WKF 2,5-7	Z7.280.6727.0	20
IVB WKF 2,5-8	Z7.280.6827.0	20
IVB WKF 2,5-9	Z7.280.6927.0	20
IVB WKF 2,5-10	Z7.280.7027.0	20
LEL 2,5/1 WEISS	05.561.6553.0	100
LEL 2,5/2 GRAU	05.561.6653.0	100
LEL 2,5/3 SCHWARZ	05.561.6753.0	100
ADF 2,5/4 GELB	04.343.6053.8	10
9813 M Sn	98.290.1000.0	1
WAK 16/2 BLAU	30.494.3021.6	100
WAK 35/2	30.494.4121.0	50
WKIF/SH/35	01.108.7653.0	10
WKIF SH/E/35	Z1.108.8453.0	10
DIN 5264 B 0,6 x 3,5	06.502.4000.0	5

Type	Part no.	Std. pack
WKIF 2,5 N-D-SL	56.703.9453.0	50
35 x 27 x 7,5 EN 60715	98.300.0000.0	1
35 x 24 x 15 EN 60715	98.360.0000.0	1
9708/2 S35	Z5.522.8553.0	100
WEF 1/35	Z5.523.9353.0	100
APIF 2,5	07.311.8353.0	10
IVB WKF 2,5-2	Z7.280.6227.0	10
IVB WKF 2,5-3	Z7.280.6327.0	10
IVB WKF 2,5-4	Z7.280.6427.0	10
IVB WKF 2,5-5	Z7.280.6527.0	10
IVB WKF 2,5-6	Z7.280.6627.0	10
IVB WKF 2,5-7	Z7.280.6727.0	20
IVB WKF 2,5-8	Z7.280.6827.0	20
IVB WKF 2,5-9	Z7.280.6927.0	20
IVB WKF 2,5-10	Z7.280.7027.0	20
LEL 2,5/1 WEISS	05.561.6553.0	100
LEL 2,5/2 GRAU	05.561.6653.0	100
LEL 2,5/3 SCHWARZ	05.561.6753.0	100
ADF 2,5/4 GELB	04.343.6053.8	10
9813 M Sn	98.290.1000.0	1
WAK 16/2 BLAU	30.494.3021.6	100
WAK 35/2	30.494.4121.0	50
WKIF/SH/35	01.108.7653.0	10
WKIF SH/E/35	Z1.108.8453.0	10
DIN 5264 B 0,6 x 3,5	06.502.4000.0	5

Type	Part no.	Std. pack
WKIF 2,5 NT-D-SL	56.703.9553.0	50
35 x 27 x 7,5 EN 60715	98.300.0000.0	1
35 x 24 x 15 EN 60715	98.360.0000.0	1
9708/2 S35	Z5.522.8553.0	100
WEF 1/35	Z5.523.9353.0	100
APIF 2,5	07.311.8353.0	10
IVB WKF 2,5-2	Z7.280.6227.0	10
IVB WKF 2,5-3	Z7.280.6327.0	10
IVB WKF 2,5-4	Z7.280.6427.0	10
IVB WKF 2,5-5	Z7.280.6527.0	10
IVB WKF 2,5-6	Z7.280.6627.0	10
IVB WKF 2,5-7	Z7.280.6727.0	20
IVB WKF 2,5-8	Z7.280.6827.0	20
IVB WKF 2,5-9	Z7.280.6927.0	20
IVB WKF 2,5-10	Z7.280.7027.0	20
LEL 2,5/1 WEISS	05.561.6553.0	100
LEL 2,5/2 GRAU	05.561.6653.0	100
LEL 2,5/3 SCHWARZ	05.561.6753.0	100
ADF 2,5/4 GELB	04.343.6053.8	10
9813 M Sn	98.290.1000.0	1
WAK 16/2 BLAU	30.494.3021.6	100
WAK 35/2	30.494.4121.0	50
WKIF/SH/35	01.108.7653.0	10
WKIF SH/E/35	Z1.108.8453.0	10
DIN 5264 B 0,6 x 3,5	06.502.4000.0	5

DIN rail terminal blocks with spring connection, type *WKF*

fasis BIT

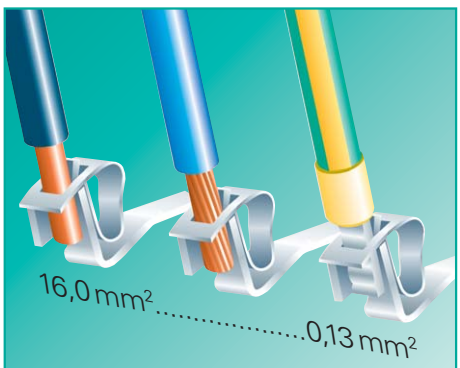

WKF provides ...

❒ **Spring connection technology –** screwless connection

Separation of electrical and mechanical functions

Application advantages

→ **Dynamic terminal connection**
Balances the cold flow properties of the connection

→ **Personnel cannot influence the clamping force** (no torque specs)
The clamping force required to connect a certain conductor, is determined by the spring element at the clamp

→ **Secure and maintenance-free electrical connection**
according to EN 60947-7-1

❒ **TOP connection**
Wire entry and operation in same plane

→ **Clear wiring in difficult** and confined wiring applications

❒ **Testing capabilities**

→ **Testing is possible on all** termination points by means of test plugs of up to 2.3 mm in diameter without having to disconnect the wires

❒ **Neutral conductor disconnect function**

→ **Screwless disconnect unit**
Easy and safe disconnection of the neutral circuit with visual display of the circuit state

❒ **Economic system**

→ **Time-saving due to pluggable accessories**

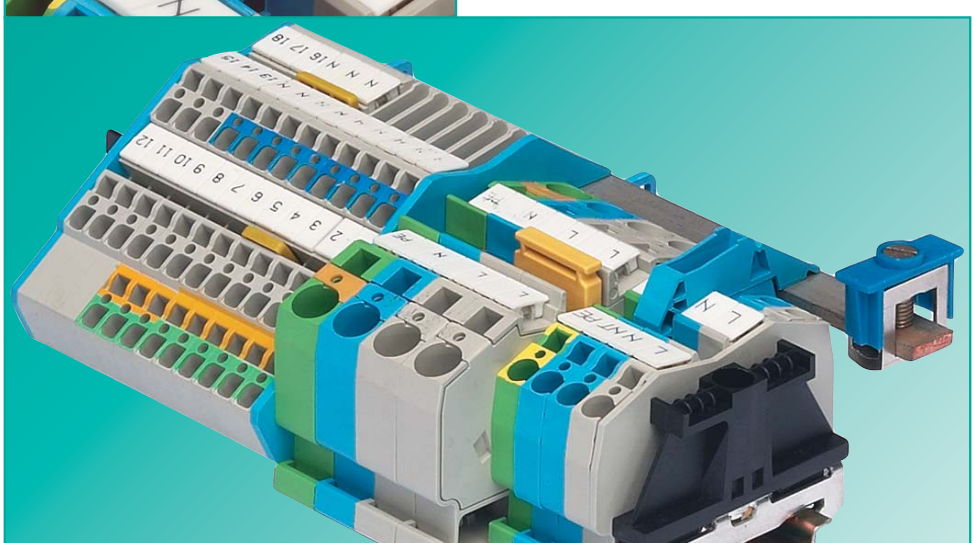

❒ ***fasis*** BIT is designed to meet the wiring and connection requirements of distribution systems in commercial and institutional buildings (such as hospitals, schools, shopping malls, theaters, office buildigns, airports) according to IEC 60364

❒ The neutral disconnect blocks of the WKIF/WKF series enable the required circuit isolation test without disconnecting the neutral conductor

❒ ***fasis*** BIT is suited for small junction boxes with cover according to DIN 43871

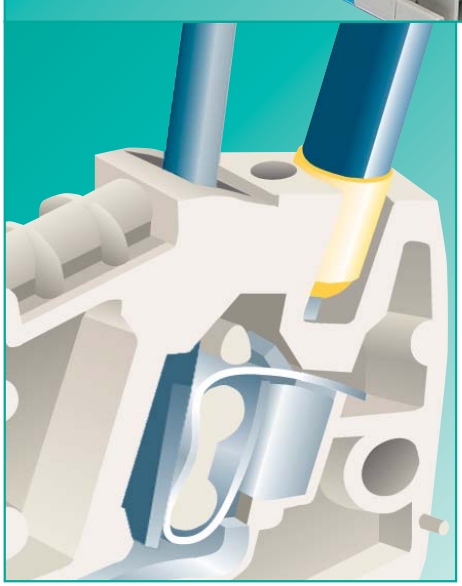

❒ **Connection capabilities**

The clamping bodies of the WKF series can take in any copper conductor types without ferrules

Due to the construction of the funnelled wire entry, stripped wires can be connected without causing wire splitting, provided that they are used in the proper way

→ Both solid and stranded wires with and without ferrules can be connected to the WKF terminal blocks

❒ **Tool**

For an optimal operation of our terminal blocks with spring connection we recommend to use the following DIN 5264 screwdrivers

i.e. cylinder-shaped screwdrivers with wedge-shaped blades

→

Rated cross section		Blade dimensions of the screwdrivers
12 AWG	2.5 mm²	0.6 x 3.5 mm
10 AWG	4 mm²	0.6 x 3.5 mm
6 AWG	10 mm²	0.8 x 4.0 mm
	16 mm²	1.0 x 5.5 mm

fasis

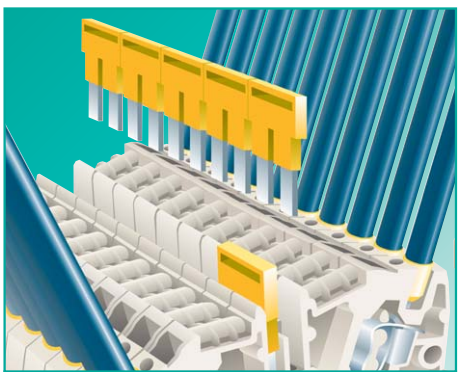

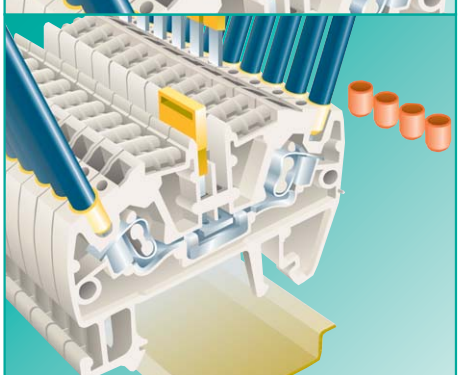

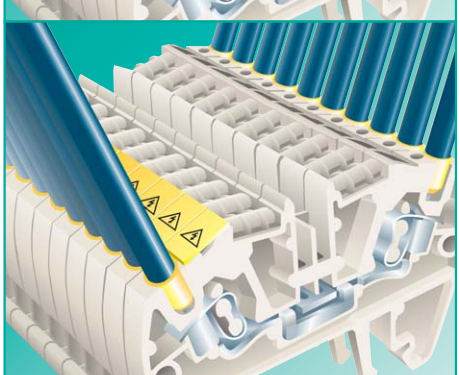

Cross connection

- ❒ The insulated jumper bars **IVB** WKF... are completely touchproof
- ❒ Partition plates are therefore not required between adjacent jumper bars of different potentials
- ❒ The insulated jumper bars **IVB** WKF... carry the same rated current as the corresponding feed through terminal block

Wire entry guides

- ❒ Wire entry guides LEL are recommended when connecting wires with cross sections below 1 mm² or 18 AWG
- ❒ Wire entry guides **LEL** keep the wires from being inserted too far and therefore guarantee safe connection

Marking facilities

- ❒ Marking facility is down the center so that the marking tag is not covered by the conductor
- ❒ Individual marking tag in 5mm spacing
- ❒ Snap-on marking strips (10 individual marking tags) for terminal block assemblies
- ❒ Tear-off marking strips for 3-digit marking facilities per block
- ❒ Custom marking upon request

Cover with warning symbol

- ❒ Cover with warning symbol **ADC** to snap on to blocks which remain live when the main switch is disconnected (VDE 0113)
- ❒ The cover can only be removed with a screwdriver

DQS certificates for all companydivisions

- ❒ Quality standard as per DIN ISO 9001in development, production and assembly
- ❒ Continued control of the quality standard by means of regular internal and external quality audits
- ❒ Compatible with certificates of other countries:
  - BSI Certificate, Great Britain
  - SQS Certificate, Switzerland
  - Aib-Vincotte Certificate, Belgium
  - ÖQS Certificate, Austria

Material

❒ Metal parts

Special alloys enable a low contact resistance and provide a gas-tight contact area

Clamping spring: stainless CrNi steel

Current carrying bar: tin-plated copper

❒ Insulation material

Polyamide has excellent electrical, chemical and mechanical characteristics

Insulating housings: Polyamide 66/6

Tracking current resistance: CTI 600

Flammability class:

WKF 4...	UL 94-V0
WKF 10...	UL 94-V0
WKIF 16...	UL 94-V2

(also see master catalog section ***facts*** & DATA)

You can use our ***wieplan*** software to configure your own terminal block assemblies (see page 10/11).

Note:

The information regarding cross sectional area and connection types pertains to unprepared wires without ferrules.
Ferrules are not required for safe connection!

The voltage ratings apply to the terminals in their intended application. When different products are mounted adjacent to each other, the proper isolation distances must be adhered to, **For this purpose, Wieland** offers a large selection of appropriate accessories.

If the ground blocks of the WKF series are not used in block assemblies, but are mounted to the rail as single terminal blocks, end brackets have to be used.

A detailed description of technical data, the standards' requirements, and the application conditions can be found in part catalog section ***facts*** & DATA: "Technical information".

Feed-through blocks with spring connection for junction boxes, type *WKF/WKIF*

fasis BIT

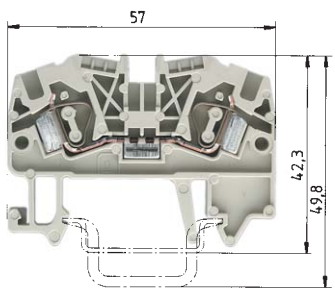

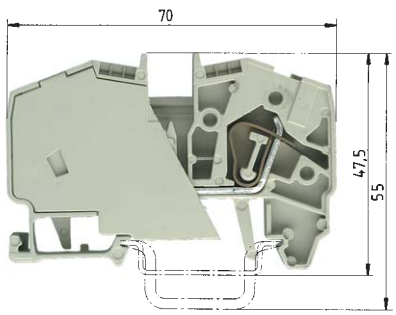

		WKF 4/35				WKF 10/35			
		fine stranded	solid	V	A	fine stranded	solid	V	A
EN 60 947-7-1/DIN VDE 0611 T1		0.13 – 4 mm²	0.13 – 6 mm²	800 V/8 kV/3	32	2.5 – 10 mm²	2.5 – 10 mm²	800 V/8 kV/3	57
UL ratings	field/factory wiring	No. 22-10 AWG		600 V	20/30	No. 14-6 AWG		600 V	55
CSA ratings		No. 22-10 AWG		600 V	35	No. 14-6 AWG		600 V	65
Width	Wire strip length	6 mm			11 mm	10 mm			13 mm
Approvals		SEV-EEX, RINA, LR, LCIE BV				LR			

		Type	Part no.	Std. pack	Type	Part no.	Std. pack
Feed-through block	Color: gray	WKF 4/35	56.704.0053.0	100	WKF 10/35	56.710.0053.0	50
Feed-through block	Color: blue	WKF 4/35 BLAU	56.704.0053.6	100	WKF 10/35 BLAU	56.710.0053.6	50
Neutral disconnect block	Color: blue						
Ground block	Color: green/yellow						
Accessories							
1. Mounting rail TS 35, DIN rail 7.5 mm high	L = 2 m	35x27x7,5 EN 60715	98.300.0000.0	1	35x27x7,5 EN 60715	98.300.0000.0	1
Mounting rail TS 35, DIN rail 15 mm high	L = 2 m	35x24x15 EN 60715	98.360.0000.0	1	35x24x15 EN 60715	98.360.0000.0	1
2. End clamp TS 35, with screw	8 mm wide	9708/2 S35	Z5.522.8553.0	100	9708/2 S35	Z5.522.8553.0	100
End clamp TS 35, without screw	8 mm wide	WEF 1/35	Z5.523.9353.0	100	WEF 1/35	Z5.523.9353.0	100
3. End plate	Color: gray	APF 2,5 – 4	07.312.2153.0	10			
	Color: blue	APF 2,5 – 4 BLAU	07.312.2153.6	10			
4. Partition plate	Color: gray	TWF 2,5 – 4	07.312.2253.0	10			
	Color: blue	TWF 2,5 – 4 BLAU	07.312.2253.6	10			
5. Cross connector insulated	2pole	IVB WKF 4 – 2	Z7.261.1227.0	10	IVB WKF 10 – 2	Z7.283.8227.0	10
(jumper bar)	3pole	IVB WKF 4 – 3	Z7.261.1327.0	10			
	4pole	IVB WKF 4 – 4	Z7.261.1427.0	10			
	5pole	IVB WKF 4 – 5	Z7.261.1527.0	10			
	6pole	IVB WKF 4 – 6	Z7.261.1627.0	10			
	7pole	IVB WKF 4 – 7	Z7.261.1727.0	20			
	8pole	IVB WKF 4 – 8	Z7.261.1827.0	20			
	9pole	IVB WKF 4 – 9	Z7.261.1927.0	20			
	10pole	IVB WKF 4 – 10	Z7.261.2027.0	20			
6. Wire entry guide	0.13 – 0.2 mm²	LEL 4/1 WEISS	05.561.8553.0	100			
	0.25 – 0.5 mm²	LEL 4/2 GRAU	05.561.8653.0	100			
	0.75 – 1.0 mm²	LEL 4/3 SCHWARZ	05.561.8753.0	100			
7. Cover with warning symbol 4 blocks		ADF 4/4 GELB	04.343.6153.8	10	ADF 10/4 GELB	04.343.6453.8	10
8. Busbar, E-Cu 10x3 mm, tin-plated	L = 1 m						
9. Connector clamp for busbar	8.5 mm wide						
	17 mm wide						
10. Busbar support, as end clamp	8 mm wide						
11. Screwdriver, uninsulated		DIN 5264 B 0,6x3,5	06.502.4000.0	5	DIN 5264 B 0,8x4	06.502.4100.0	5
Marking accessories see page 48/49 and page 90/91							

fasis

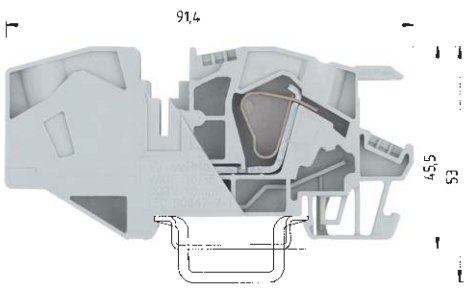

WKIF 16/35

fine stranded	stranded	V	A
4 – 16 mm²	4 – 16 mm²	800 V/8 kV/3	76
No. 12 – 4 AWG		600 V	78

12 mm 16 mm

Type	Part no.	Std. pack
WKIF 16/35	56.716.1153.0	50
WKIF 16/35 BLAU	56.716.1153.6	50
35x27x7,5 EN 60715	98.300.0000.0	1
35x24x15 EN 60715	98.360.0000.0	1
9708/2 S35	Z5.522.8553.0	100
WEF 1/35	Z5.523.9353.0	100
IVB WKIF 16 – 2	Z7.284.6227.0	10
DIN 5264 B 1x5	06.502.4200.0	5

Neutral disconnect blocks with spring connection for junction boxes, type *WKF/WKIF*

fasis BIT

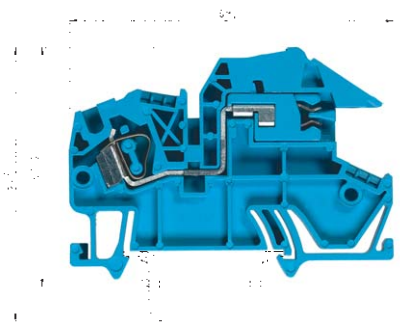

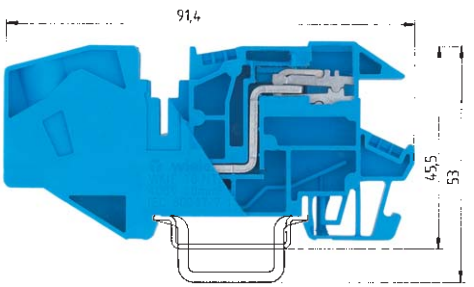

		WKF 4 NT/35				WKIF 16 NT/35			
		fine stranded	solid	V	A	fine stranded	stranded	V	A
EN 60 947-7-1; 1991/DIN VDE 0611 T1/08.92		0.13 – 4 mm²	0.13 – 6 mm²	400 V/6 kV/3	30	4 – 16 mm²	4 – 16 mm²	400 V/6 kV/3	68
UL ratings				600 V	20				
CSA ratings		No. 22-10 AWG		600 V	25				
Width	Wire strip length	6 mm			11 mm	12 mm			16 mm
Approvals									

		Type	Part no.	Std. pack	Type	Part no.	Std. pack
Feed-through block	Color: gray						
Feed-through block	Color: blue						
Neutral disconnect block	Color: blue	WKF 4 NT/35	56.704.8153.0	100	WKIF 16 NT/35	56.716.8153.0	50
Ground block	Color: green/yellow						
Accessories							
1. Mounting rail TS 35, DIN rail 7.5 mm high	L = 2 m	35x27x7,5 EN 60715	98.300.0000.0	1	35x27x7,5 EN 60715	98.300.0000.0	1
Mounting rail TS 35, DIN rail 15 mm high	L = 2 m	35x24x15 EN 60715	98.360.0000.0	1	35x24x15 EN 60715	98.360.0000.0	1
2. End clamp TS 35, with screw	8 mm wide	9708/2 S35	Z5.522.8553.0	100	9708/2 S35	Z5.522.8553.0	100
End clamp TS 35, without screw	8 mm wide	WEF 1/35	Z5.523.9353.0	100	WEF 1/35	Z5.523.9353.0	100
3. End plate	Color: gray						
	Color: blue	APF 4 NT	07.312.5653.0	10			
	Color: green						
4. Partition plate							
5. Cross connector insulated	2pole	IVB WKF 4 – 2	Z7.261.1227.0	10	IVB WKIF 16 – 2	Z7.284.6227.0	10
(jumper bar)	3pole	IVB WKF 4 – 3	Z7.261.1327.0	10			
	4pole	IVB WKF 4 – 4	Z7.261.1427.0	10			
	5pole	IVB WKF 4 – 5	Z7.261.1527.0	10			
	6pole	IVB WKF 4 – 6	Z7.261.1627.0	10			
	7pole	IVB WKF 4 – 7	Z7.261.1727.0	20			
	8pole	IVB WKF 4 – 8	Z7.261.1827.0	20			
	9pole	IVB WKF 4 – 9	Z7.261.1927.0	20			
	10pole	IVB WKF 4 – 10	Z7.261.2027.0	20			
6. Wire entry guide	0.13 – 0.2 mm²	LEL 4/1 WEISS	05.561.8553.0	100			
	0.25 – 0.5 mm²	LEL 4/2 GRAU	05.561.8653.0	100			
	0.75 – 1.0 mm²	LEL 4/3 SCHWARZ	05.561.8753.0	100			
7. Cover with warning symbols over 4 blocks		ADF 4/4 GELB	04.343.6153.8	10			
8. Busbar, E-Cu 10x3 mm, tin-plated	L = 1 m	9813 M SN	98.290.1000.0	1	9813 M SN	98.290.1000.0	1
9. Connector clamp for busbar	8.5 mm wide	WAK 16/2 BLAU	30.494.3021.6	100	WAK 16/2 BLAU	30.494.3021.6	100
	17 mm wide	WAK 35/2	30.494.4121.0	50	WAK 35/2	30.494.4121.0	50
10. Busbar support as, end clamp	8 mm wide	WKIF SH/E/35	Z1.108.8453.0	10	WKIF SH/E/35	Z1.108.8453.0	10
11. Screwdriver, uninsulated		DIN 5264 B 0,6x3,5	06.502.4000.0	5	DIN 5264 B 1x5	06.502.4200.0	5
Marking accessories see page 48/49 and page 90/91							

fasis

Ground blocks with spring connection for junction boxes, type *WKF/WKIF*

fasis BIT

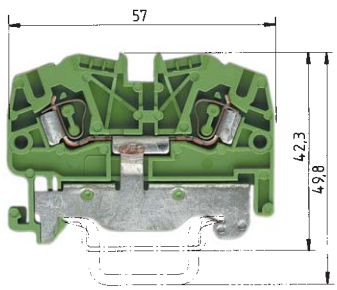

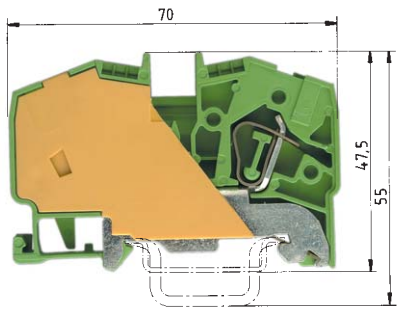

Ratings for adjacent feed-through blocks of same series and size
Current carrying capabilities of the mounting rails see catalog section ***facts*** & DATA

Ratings for adjacent feed-through blocks of same series and size
Current carrying capabilities of the mounting rails see catalog section ***facts*** & DATA

		WKF 4 SL/35				WKF 10 SL/35			
		fine stranded	solid	V	A	fine stranded	solid	V	A
EN 60 947-7-2/DIN VDE 0611 T3		0.13 – 4 mm²	0.13 – 6 mm²	800 V/8 kV/3	32	2.5 – 10 mm²	2.5 – 10 mm²	800 V/8 kV/3	57
UL ratings	field/factory wiring	No. 22-10 AWG		600 V		No. 14-6 AWG		600 V	
CSA ratings		No. 22-10 AWG		600 V		No. 14-6 AWG		600 V	
Width	Wire strip length	6 mm			11 mm	10 mm			13 mm
Approvals		SEV-EEX RINA LR LCIE BV							

		Type	Part no.	Std. pack	Type	Part no.	Std. pack
Feed-through block	Color: gray						
Feed-through block	Color: blue						
Neutral disconnect block	Color: blue						
Ground block	Color: green/yellow	WKF 4 SL/35	56.704.9053.0	100	WKF 10 SL/35	56.710.9053.0	50
Accessories							
1. Mounting rail TS 35, DIN rail 7.5mm high	L = 2 m	35 x 27 x 7,5 EN 60715	98.300.0000.0	1	35 x 27 x 7,5 EN 60715	98.300.0000.0	1
Mounting rail TS 35, DIN rail 15mm high	L = 2 m	35 x 24 x 15 EN 60715	98.360.0000.0	1	35 x 24 x 15 EN 60715	98.360.0000.0	1
2. End clamp for TS 35, with screw	8 mm wide	9708/2 S35	Z5.522.8553.0	100	9708/2 S35	Z5.522.8553.0	100
End clamp for TS 35, without screws	8 mm wide	WEF 1/35	Z5.523.9353.0	100	WEF 1/35	Z5.523.9353.0	100
3. End plate	Color: gray						
	Color: blue						
	Color: green	APF 2,5-4 GRÜN	07.312.2153.7	10			
4. Partition plate	Color: gray						
	Color: blue						
5. Cross connector insulated	2pole						
(jumper bar)	3pole						
	4pole						
	5pole						
	6pole						
	7pole						
	8pole						
	9pole						
	10pole						
6. Wire entry guide	0.13 – 0.2 mm²	LEL 4/1 WEISS	05.561.8553.0	100			
	0.25 – 0.5 mm²	LEL 4/2 GRAU	05.561.8653.0	100			
	0.75 – 1.0 mm²	LEL 4/3 SCHWARZ	05.561.8753.0	100			
7. Cover with warning symbol over 4 blocks		ADF 4/4 GELB	04.343.6153.8	10	ADF 10/4 GELB	04.343.6453.8	10
8. Busbar, E-Cu 10 x 3 mm, tin-plated	L = 1 m						
9. Connector clamp for busbar	8.5 mm wide						
		17 mm wide					
10. Busbar support, as end clamp	8 mm wide						
11. Screwdriver, uninsulated		DIN 5264 B 0,6 x 3,5	06.502.4000.0	5	DIN 5264 B 0,8 x 4	06.502.4100.0	5
Marking accessories see page 48/49 and page 90/91							

fasis

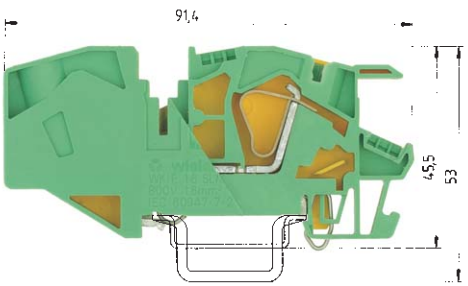

WKIF 16 SL/35

fine stranded	stranded	V	A
4 – 16 mm²	4 – 16 mm²	800 V/8 kV/3	76
UL pending			
No. 12-4 AWG		600 V	
12 mm			16 mm

Type	Part no.	Std. pack
WKIF 16 SL/35	56.716.9153.0	50
35 x 27 x 7,5 EN 60715	98.300.0000.0	1
35 x 24 x 15 EN 60715	98.360.0000.0	1
9708/2 S35	Z5.522.8553.0	100
WEF 1/35***)	Z5.523.9353.0	100
DIN 5264 B 1 x 5	06.502.4200.0	5

Terminal blocks for electrical installations with screw connection, type *WKI*

selos BIT

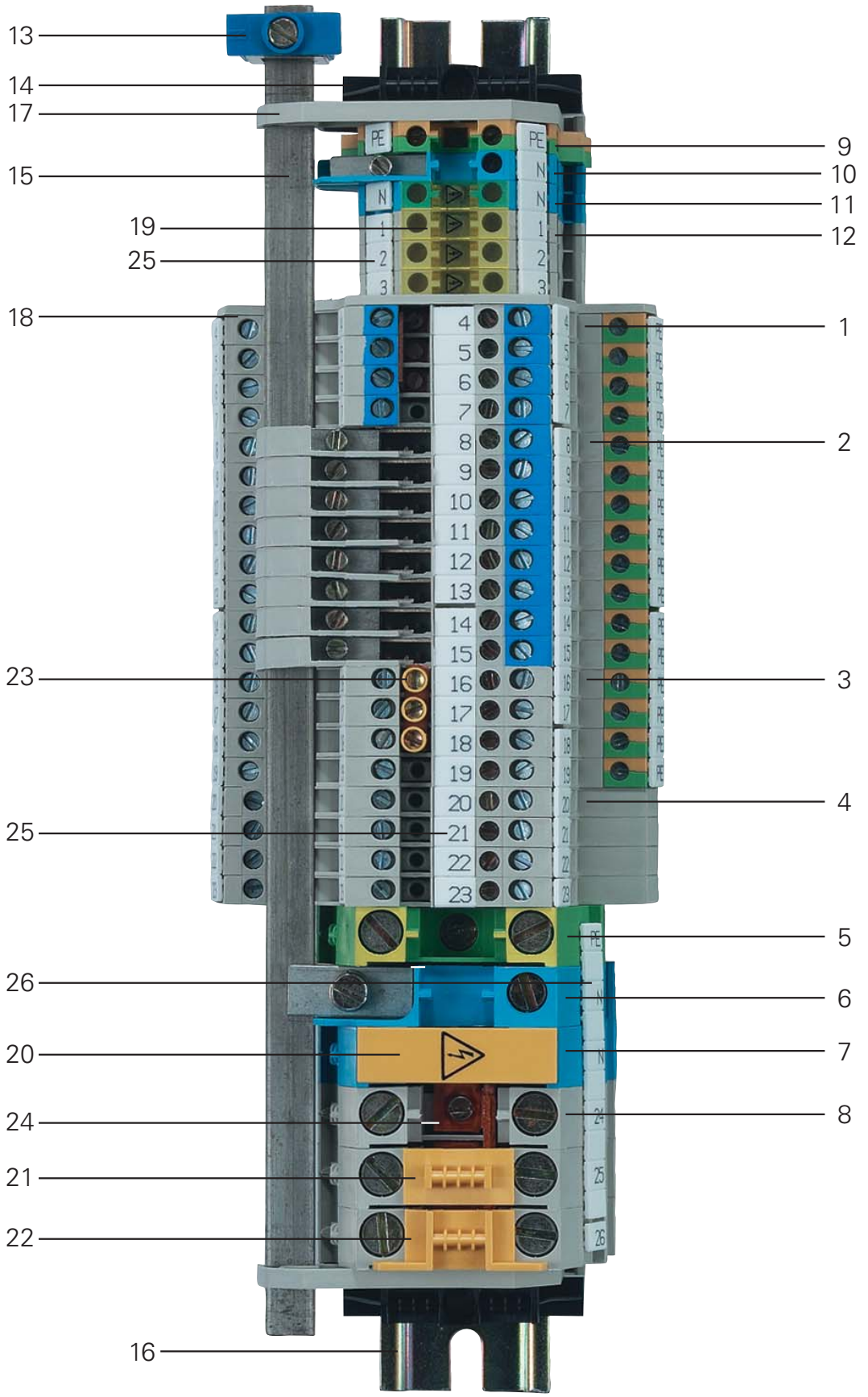

selos

Item	Description	Type	Part number
1	Installation blocks	WKI 4 N-D-SL	56.404.9455.0
2	Installation blocks	WKI 4 NT-D-SL	56.404.9555.0
3	Installation blocks	WKI 4 D-D-SL	56.404.9855.0
4	Installation block	WKI 4 D-D	56.404.9755.0
5	Ground block	WKI 16 SL/35	56.516.9255.0
6	Neutral disconnect block	WKI 16 ETK/U	57.516.8255.0
7	Feed through block	WKI 16 /U BLAU	57.516.1155.6
8	Feed through block	WKI 16 /U	57.516.1155.0
9	Ground block	WK 4 SL/U	57.504.9055.0
10	Neutral disconnect block	WKN 4 ETK/U	57.504.8155.0
11	Feed through block	WK 4 /U BLAU	57.504.0055.6
12	Feed through block	WK 4 /U	57.504.0055.0
13	Connector clamp	WAK 16/2 BLAU	30.494.3021.6
14	End clamp	9708/2 S35	Z5.522.8553.0
15	Busbar 10 x 3	9813 M Sn	98.290.1000.0
16	Mounting rail	35 x 27 x 7.5	98.300.0000.0
17	Busbar support	WKI SH/U	01.108.3255.0
18	End plate	API 4/2	07.311.6555.0
19	Cover with warning symbol	AD 4/4 GELB	04.343.4856.8
20	Cover with warning symbol	ADI 16/1 GELB	04.325.8553.8
21	Cover with marking facility	AD VB 16 GELB	04.326.2453.8
22	Partition plate with marking facility	TS 16 GELB	07.311.2453.8
23	Cross connector, insulated (12pole)	IVB WKI 4–12	Z7.271.5227.0
24	Cross connector, uninsulated	VB WKI 16–3	Z7.289.0327.0
25	Marking strip	9705 A/6/10 B	04.842.6053.0
26	Marking strip	9705 A/6/10/5 B	04.842.6553.0

Terminal blocks for electrical installations with screw connection, type *WKI*

selos BIT

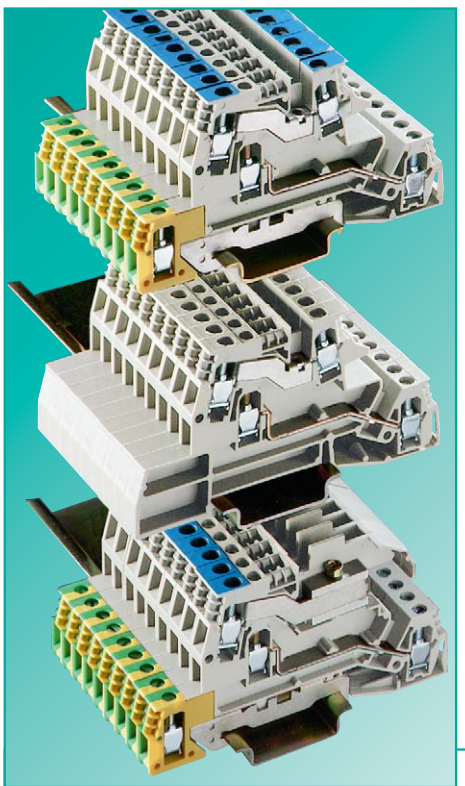

WKI provides ...

- ❒ Clear circuit identification
- ❒ Small dimensions in three-tier design
- ❒ Neutral conductor disconnect function
- ❒ All wire entry points in the same plane
- ❒ Mounting for TS 35 DIN rail
- ❒ Circuit protection via fuse
- ❒ Ground connection directly to the DIN rail

Application advantages

- ❒ Multiple circuits with color coding in one terminal block
- ❒ Best suited for small junction boxes with cover according to DIN 43871
- ❒ Fast and safe disconnection of the neutral conductor with WKI 4 NT-D-SL
- ❒ Easy wiring
- ❒ Sliding disconnect shows the state of the neutral circuit (open or closed)

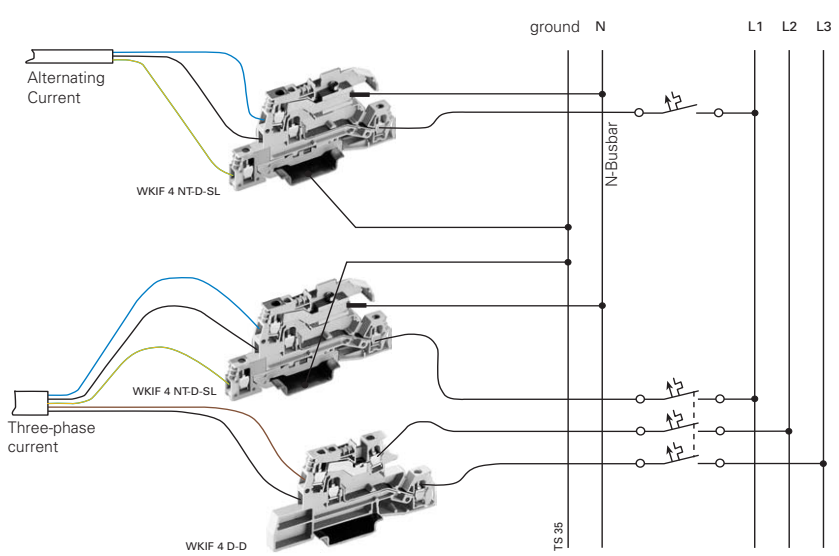

- ❒ ***selos*** BIT is designed to meet the wiring and installation requirements of distribution systems in commercial and institutional buildings (such as hospitals, schools, shopping malls, theaters, office buildings, institutes, airports) according to IEC 60364 and standard control requirements
- ❒ WKI 4 NT-D-SL enables the required circuit isolation test without disconnecting the neutral conductor
- ❒ WKI provides installation blocks in 5 versions:
  WKI 4 DU
  WKI 4 D-D
  WKI 4 D-D-SL
  WKI 4 N-D-SL
  WKI 4 NT-D-SL

  3 special variants:
  WKI 4 NT-D-SL-GL
  WKI 4 NTN-D-SL
  WKI 4 TKG-D-SL
- ❒ Other applications include control wiring. For example WKI 4 TKG-D-SL signal in one terminal with fusing of the (+) circuit

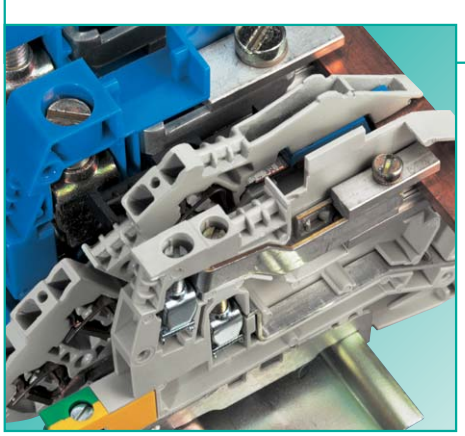

- ❒ Connection slot on the terminal block for the neutral busbar
- ❒ Captive hardware and vibration design

- ❒ The terminal blocks for electrical installations of the WKI series in the NT version can be combined with ...

  the terminal blocks of the WKIF series (spring connection technology)

  the neutral disconnect blocks (ETK) of the WKN series (screw connection technology)

selos

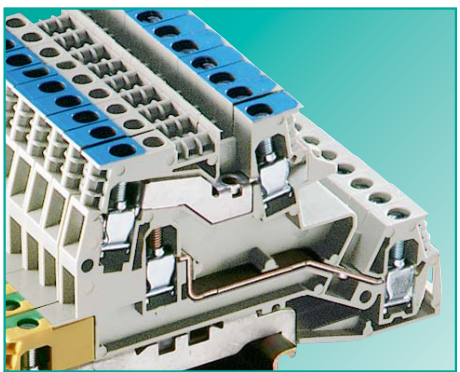

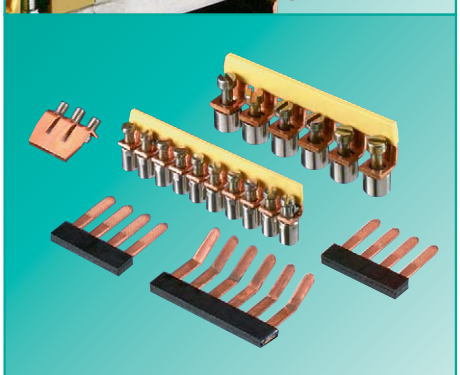

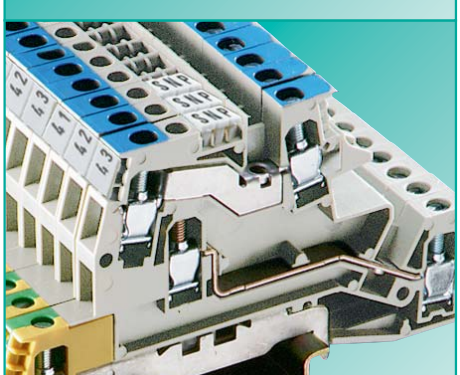

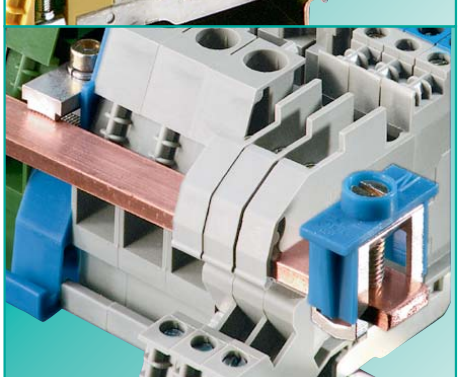

Jumpering with cross connectors

- ❒ Jumpering with insulated and uninsulated cross connectors (jumperbars)
- ❒ Cross connectors do not take up clamping space
- ❒ Uninsulated cross connectors can be cut to length
- ❒ When using cross connectors, end plates or partitions are required to maintain max. voltage rating
- ❒ Cross connectors come pre-assembled

Jumpering with jumper combs

- ❒ Jumpering with insulated jumper combs
- ❒ Jumper comb and conductor are inserted in the clamping body and clamped

Marking facilities

- ❒ Marking facility for each termination point
- ❒ Tear-off marking strips for 3-digit marking facilities per block
- ❒ Single marking tags in 5 mm spacing
- ❒ Marking strips (10 individual marking tags) to snap on to 10 terminal blocks
- ❒ Custom marking upon request

Connector clamps

- ❒ Connector clamps for busbar 10 x 3 mm (E-Cu, tin-plated)
- ❒ WAK 16/2... 0.75 – 16 mm^2
- ❒ WAK 35/2... 16 – 35 mm^2
- ❒ Clear identification of the circuit task when the erternal neutral conductor is connected to the busbar

DQS certificates for all company divisions

- ❒ Quality standard as per DIN ISO 9001 in Development, Production and Assembly
- ❒ Continued control of the quality standard by means of regular internal and external quality audits
- ❒ Compatible with certificates of other countries:
  - BSI Certificate, Great Britain
  - SQS Certificate, Switzerland
  - Aib-Vincotte Certificate, Belgium
  - ÖQS Certificate, Austria

Material

❒ Metal parts

Special alloys enable a low contact resistance and provide a gas-tight contact area:

Clamping body/clamping screws: Steel, zinc-plated and dichromated

Current carrying bar: tin-plated copper

❒ Insulation material

Polyamide has excellent electrical, chemical and mechanical characteristics

Insulating housings: Polyamide 66/6

Tracking current resistance: CTI 600

Flammability class: UL 94-V0

(also see master catalog section ***facts*** & DATA: Technical information)

You can use our ***wieplan*** software to configure your own terminal block assemblies (see page 10/11).

Note:

The information regarding cross sectional area and connection types pertains to unprepared wires without ferrules.

The voltage ratings apply to the terminals in their intended application. When different products are mounted adjacent to each other, the proper isolation distances must be adhered to. For this purpose, **Wieland** offers a large selection of appropriate accessories.

A detailed description of technical data, the standards' requirements, and the application conditions can be found in part catalog section ***facts*** & DATA: "Technical information".

Terminal blocks for electrical installations with screw connection, type *WKI 4*

selos BIT

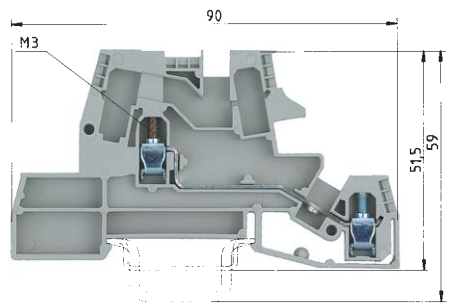

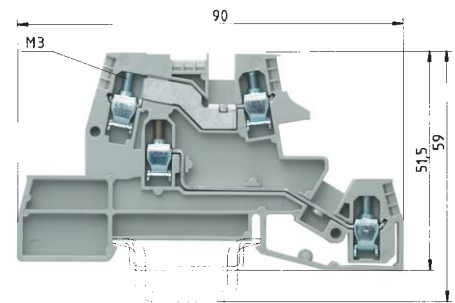

Grounding:

*) For the current carrying capability of the mounting rail see catalog ***facts*** & DATA

DU – line feed through block:
lower contact equipped only

D – line feed through block
D – line feed through block

		WKI 4 DU				WKI 4 D-D			
EN 60947-7-1/DIN VDE 0611 T1		fine stranded	solid	V	A	fine stranded	solid	V	A
EN 60947-7-2		0.5 – 4 mm²	0.5 – 6 mm²	400 V/6 kV/3	26	0.5 – 4 mm²	0.5 – 6 mm²	400 V/6 kV/3	26
UL ratings		No. 22-10 AWG		300 V	24	No. 22-10 AWG		300 V	24
CSA ratings		No. 22-10 AWG		300 V	25	No. 22-10 AWG		300 V	25
Width	Wire strip length	6 mm			7 mm	6 mm			7 mm
Approvals									

		Type	Part no.	Std. pack	Type	Part no.	Std. pack
Installation block	Color: gray				WKI 4 D-D	56.404.9755.0	50
Lower tier of installation block equipped only		WKI 4 DU	56.404.9655.0	50			
Installation block with indicator lamp (110 – 200 V)							
Accessories							
1. Mounting rail TS 35, DIN rail 7.5 mm high	L = 2 m	35 x 27 x 7,5 EN 60715	98.300.0000.0	1	35 x 27 x 7,5 EN 60715	98.300.0000.0	1
Mounting rail TS 35, DIN rail 15 mm high	L = 2 m	35 x 24 x 15 EN 60715	98.360.0000.0	1	35 x 24 x 15 EN 60715	98.360.0000.0	1
2. End clamp for TS 35, with screw	8 mm wide	9708/2 S35	Z5.522.8553.0	100	9708/2 S35	Z5.522.8553.0	100
End clamp, screwless	8 mm thick	WEF 1/35	Z5.523.9353.0	100	WEF 1/35	Z5.523.9353.0	100
3. End plate	2 mm thick	API 4/2	07.311.6555.0	10	API 4/2	07.311.6555.0	10
4. Partition plate		TWI 4	07.311.6955.0	10	TWI 4	07.311.6955.0	10
5. Cross connector with screws, E-Cu							
	uninsulated 2pole	9703/6-2	Z7.211.0227.0	50	9703/6-2	Z7.211.0227.0	50
	to 6pole	9703/6-6	Z7.211.0627.0	50	9703/6-6	Z7.211.0627.0	50
	insulated 12pole	IVB WKI 4-12	Z7.271.5227.0	10	IVB WKI 4-12	Z7.271.5227.0	10
Field divisible strip – uninsulated,	70pole	9703/6 M-70	Z7.211.0027.0	10	9703/6 M-70	Z7.211.0027.0	10
6. Busbar, E-Cu 10 x 3 mm, I_N = 140 A	L = 1 m	9813 M	98.290.0000.0	1	9813 M	98.290.0000.0	1
Busbar, tin-plated, I_N = 140 A	L = 1 m	9813 M Sn	98.290.1000.0	1	9813 M Sn	98.290.1000.0	1
7. Busbar support	4 mm wide	WKI/SH/U	01.108.3255.0	10	WKI/SH/U	01.108.3255.0	10
Busbar support	8 mm wide	WKIF SH/E/35	Z1.108.8453.0	10	WKIF SH/E/35	Z1.108.8453.0	10
8. Connector clamp for busbar							
16 mm²	8.5 mm wide	WAK 16/2 BLAU	30.494.3021.6	100	WAK 16/2 BLAU	30.494.3021.6	100
35 mm²	17 mm wide	WAK 35/2	30.494.4121.0	50	WAK 35/2	30.494.4121.0	50
9. Screwdriver, uninsulated		DIN 5264 B 0,6 x 3,5	06.502.4000.0	5	DIN 5264 B 0,6 x 3,5	06.502.4000.0	5
Marking accessories see page 48/49 and page 90/91							

selos

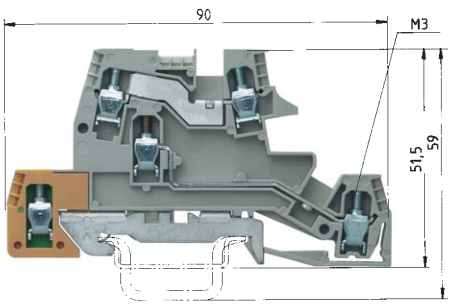

D – line feed through block
D – line feed through block
SL – ground

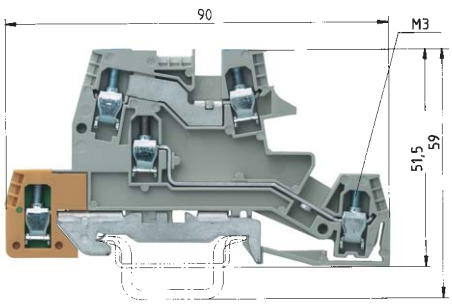

N – neutral feed-through block
D – line feed through block
SL – ground

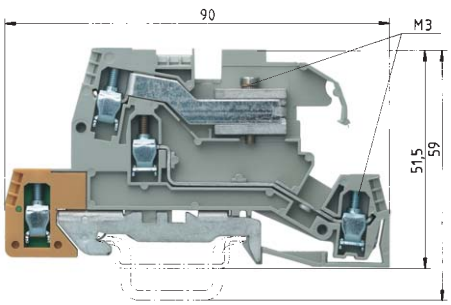

N – disconnect block
D – line feed through block
SL – ground
GL – indicator lamp

WKI 4 D-D-SL

fine stranded	solid	V	A
0.5 – 4 mm²	0.5 – 6 mm²	400 V/6 kV/3	26*)
No. 22-10 AWG		300 V	24
No. 22-10 AWG		300 V	25
6 mm			7 mm

Type	Part no.	Std. pack
WKI 4 D-D-SL	56.404.9855.0	50
35 x 27 x 7,5 EN 60715	98.300.0000.0	1
35 x 24 x 15 EN 60715	98.360.0000.0	1
9708/2 S35	Z5.522.8553.0	100
WEF 1/35	Z5.523.9353.0	100
API 4/2	07.311.6555.0	10
TWI 4	07.311.6955.0	10
9703/6-2	Z7.211.0227.0	50
9703/6-6	Z7.211.0627.0	50
IVB WKI 4-12	Z7.271.5227.0	10
9703/6 M-70	Z7.211.0027.0	10
9813 M	98.290.0000.0	1
9813 M Sn	98.290.1000.0	1
WKI/SH/U	01.108.3255.0	10
WKIF SH/E/35	Z1.108.8453.0	10
WAK 16/2 BLAU	30.494.3021.6	100
WAK 35/2	30.494.4121.0	50
DIN 5264 B 0,6 x 3,5	06.502.4000.0	5

*CL I, ZN1, AExe II

WKI 4 N-D-SL

fine stranded	solid	V	A
0.5 – 4 mm²	0.5 – 6 mm²	400 V/6 kV/3	26*)
No. 22-10 AWG		300 V	24
No. 22-10 AWG		300 V	25
6 mm			7 mm

Type	Part no.	Std. pack
WKI 4 N-D-SL	56.404.9455.0	50
35 x 27 x 7,5 EN 60715	98.300.0000.0	1
35 x 24 x 15 EN 60715	98.360.0000.0	1
9708/2 S35	Z5.522.8553.0	100
WEF 1/35	Z5.523.9353.0	100
API 4/2	07.311.6555.0	10
TWI 4	07.311.6955.0	10
9703/6-2	Z7.211.0227.0	50
9703/6-6	Z7.211.0627.0	50
IVB WKI 4-12	Z7.271.5227.0	10
9703/6 M-70	Z7.211.0027.0	10
9813 M	98.290.0000.0	1
9813 M Sn	98.290.1000.0	1
WKI/SH/U	01.108.3255.0	10
WKIF SH/E/35	Z1.108.8453.0	10
WAK 16/2 BLAU	30.494.3021.6	100
WAK 35/2	30.494.4121.0	50
DIN 5264 B 0,6 x 3,5	06.502.4000.0	5

WKI 4 NT-D-SL (-GL)

fine stranded	solid	V	A
0.5 – 4 mm²	0.5 – 6 mm²	400 V/6 kV/3	26*)
No. 22-10 AWG		300 V	24
No. 22-10 AWG		300 V	25
6 mm			7 mm

Type	Part no.	Std. pack
WKI 4 NT-D-SL	56.404.9555.0	50
WKI 4 NT-D-SL-GL	56.404.9255.0	50
35 x 27 x 7,5 EN 60715	98.300.0000.0	1
35 x 24 x 15 EN 60715	98.360.0000.0	1
9708/2 S35	Z5.522.8553.0	100
WEF 1/35	Z5.523.9353.0	100
API 4/2	07.311.6555.0	10
9703/6-2	Z7.211.0227.0	50
9703/6-6	Z7.211.0627.0	50
IVB WKI 4-12	Z7.271.5227.0	10
9703/6 M-70	Z7.211.0027.0	10
9813 M	98.290.0000.0	1
9813 M Sn	98.290.1000.0	1
WKI/SH/U	01.108.3255.0	10
WKIF SH/E/35	Z1.108.8453.0	10
WAK 16/2 BLAU	30.494.3021.6	100
WAK 35/2	30.494.4121.0	50
DIN 5264 B 0,6 x 3,5	06.502.4000.0	5

Terminal blocks for electrical installations with screw connection, type *WKI 4*

selos BIT

Fuse application:
Nominal current accord to VDE 0820 T2/EN 60 127-2 when using 1.6 W
– 6.3 A for single blocks
– 4 A for blocks mounted directly adjacent to each other
Voltage and current are determined by the LED and the fuse used in the end application

Ground application:
*) For the current carrying capability of the mounting rail see catalog ***facts*** & DATA

Busbar application:
Position these terminals at the beginning or end of the assembly when incorporating the busbar system

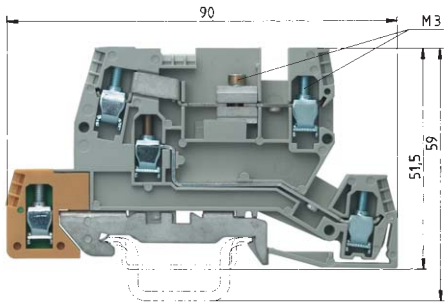

NTN – disconnect block
D – line feed through block:
SL – ground

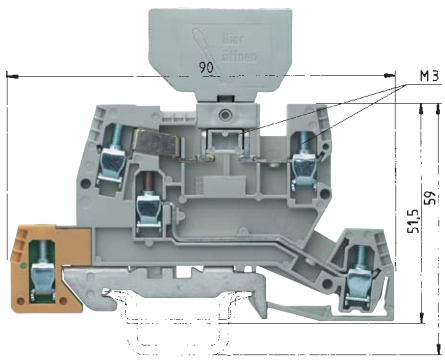

TKG – fuse plug for 5 x 20 fuse
D – line feed through block:
SL – ground block

		WKI 4 NTN-D-SL				WKI 4 TKG-D-SL			
		fine stranded	solid	V	A	fine stranded	solid	V	A
EN 60 947-7-1, EN 60 947-7-2		0.5 – 4 mm²	0.5 – 6 mm²	400 V/6 kV/3	26*)	0.5 – 4 mm²	0.5 – 6 mm²	400 V/6 kV/3	26*)
UL ratings		No. 22-10 AWG		300 V	24	No. 22-10 AWG		300 V	12
CSA ratings		No. 22-10 AWG		300 V	25	No. 22-10 AWG		300 V	25
Width	Wire strip length	6 mm			7 mm	6 mm			7 mm
Approvals									

		Type	Part no.	Std. pack	Type	Part no.	Std. pack
Installation block	Color: gray	WKI 4 NTN-D-SL	56.404.9155.0	50	WKI 4 TKG-D-SL	56.404.8855.0	50
Fuse holder for 5 x 20 fuse	Color: gray				Si ST	Z1.299.4055.0	10
Fuse holder with indicator (24 V)	Color: gray				Si ST LED	Z1.299.4155.0	10
Fuse holder with indicator (110 – 220 V)	Color: gray				Si ST GL	Z1.299.4255.0	10
(G fuse-links DIN 41571, 250 V/6.3 A, 5 x 20 mm)							
Accessories							
1. Mounting rail TS 35, DIN rail 7.5 mm high	L = 2 m	35 x 27 x 7,5 EN 60715	98.300.0000.0	1	35 x 27 x 7,5 EN 60715	98.300.0000.0	1
Mounting rail TS 35, DIN rail 15 mm high	L = 2 m	35 x 24 x 15 EN 60715	98.360.0000.0	1	35 x 24 x 15 EN 60715	98.360.0000.0	1
2. End clamp for TS 35, with screw	8 mm wide	9708/2 S35	Z5.522.8553.0	100	9708/2 S35	Z5.522.8553.0	100
End clamp, screwless	8 mm thick	WEF 1/35	Z5.523.9353.0	100	WEF 1/35	Z5.523.9353.0	100
3. End plate	2 mm thick	API 4/3	07.311.6855.0	10	API 4/3	07.311.6855.0	10
4. Partition plate							
5. Cross connector with screws, (jumper bar)							
uninsulated	2pole	9703/6-2	Z7.211.0227.0	50	9703/6-2	Z7.211.0227.0	50
	to 6pole	9703/6-6	Z7.211.0627.0	50	9703/6-6	Z7.211.0627.0	50
insulated	12pole	IVB WKI 4-12	Z7.271.5227.0	10	IVB WKI 4-12	Z7.271.5227.0	10
Field-divisible strip	– 70pole	9703/6 M-70	Z7.211.0027.0	10	9703/6 M-70	Z7.211.0027.0	10
6. Busbar, E-Cu 10 x 3 mm, I_N = 140 A	L = 1 m						
Busbar, tin-plated, I_N = 140 A	L = 1 m						
7. Busbar support	4 mm wide						
Busbar support	8 mm wide						
8. Connector clamp for busbar							
16 mm²	8.5 mm wide						
35 mm²	17 mm wide						
9. Screwdriver, uninsulated		DIN 5264 B 0,6 x 3,5	06.502.4000.0	5	DIN 5264 B 0,6 x 3,5	06.502.4000.0	5
Marking accessories see page 48/49 and page 90/91							

selos

Terminal blocks with screw connection for junction boxes, type *WKI*

selos BIT

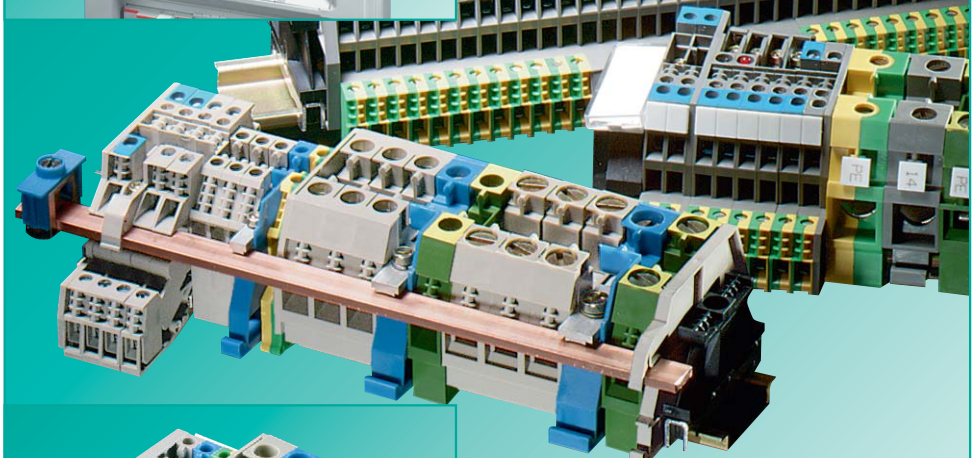

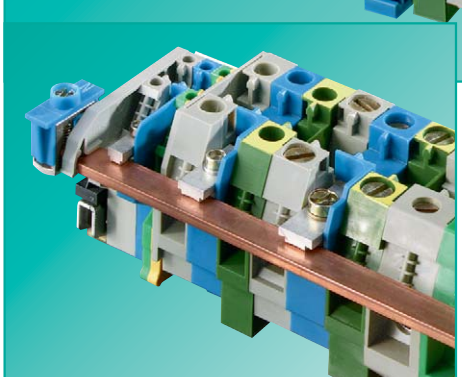

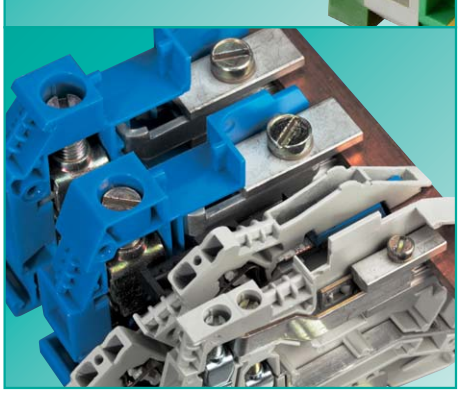

WKI provides ...

❒ **Screw connection technology**
in rising cage clamp system with one-piece threaded collar

❒ **Convenient handling**

❒ **Neutral conductor disconnect**

Application advantages

→ **High connection range**
Connection of solid, fine stranded and stranded conductors in the rated wire guage with and without ferrules

→ **High clamping force, low contact resistance**
High tightening torques (master catalog, section 8) create high clamping forces for large contact areas resulting in low contact resistance and a gas tight connection

→ **Clamping body**
Delivered in open position, ready to wire

→ **Sliding disconnect**
clearly shows state (open or closed) of the circuit and allows quick and easy disconnect from the busbar

❒ ***selos*** BIT is designed to meet the wiring and installation requirements of distribution systems in commercial and institutional buildings (such as hospitals, schools, shopping malls, theaters, office buildings, airports) according to IEC 60364

❒ The neutral disconnect blocks of the WKI series enable the required insulation test without disconnecting the neutral conductor

❒ **Height**

Due to their height, the terminal blocks of the ***selos*** BIT family are suited for small junction boxes with cover according to DIN 43871.

❒ Connection slot on the terminal block for the neutral busbar

❒ Ground directly to the DIN rail

❒ Captive hardware and vibration resistant design

❒ The WKI series provides

Feed-through blocks	4 – 35 mm² 10-2 AWG
Neutral disconnect blocks	4 – 16 mm² 10-4 AWG
Ground blocks	4 – 35 mm² 10-2 AWG
PEN assembly blocks	10 – 35 mm² 6-2 AWG

→ Neutral disconnect blocks (ETK) of the WKI series can be combined with ...

the installation blocks of the WKI series (screw connection technology)

Installation blocks of the WKIF series (spring connection technology)

Neutral disconnect blocks (ETK) of the WKN series (screw connection technology)

selos

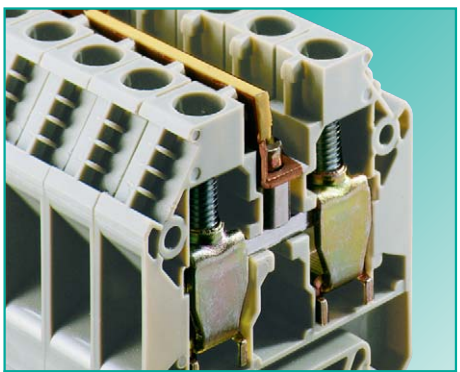

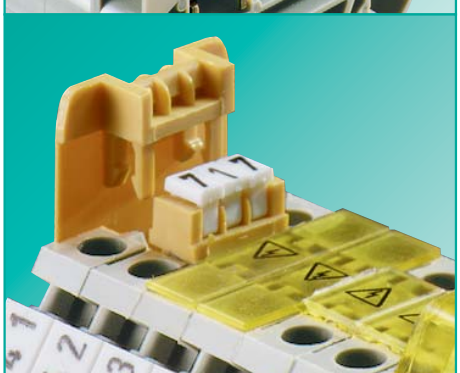

Cross connection

- ❒ Jumpering with insulated or uninsulated cross connectors (jumper bars)
- ❒ Insulated cross connectors are touch-safe according to regulation VBG 4
- ❒ Cross connectors come preassembled
- ❒ Available in 2–12pole configurations or as a field-divisible strip – up to 70 poles
- ❒ When used with an end plate or partition the cross connector is rated for the same voltage as the terminal block

Partition plates

- ❒ Provides electrical and visual separation for adjacent terminal block groups
- ❒ Pre and post assembly versions
- ❒ Can only be removed with a screwdriver
- ❒ Post assembly version offers marking tag facility and cover
- ❒ 4-digit marking strip for additional marking

Marking facilities

- ❒ Marking facility at every termination point
- ❒ Tear-off marking strips for 3-digit marking facilities per block
- ❒ Single marking tags in 5 mm spacing
- ❒ Marking strips (10 individual marking tags) to snap on to 10 terminal blocks
- ❒ Custom marking upon request

Cover

- ❒ Cover with warning symbol to snap on to blocks which remain live when the main switch is disconnected (VDE 0113)
- ❒ Cover for uninsulated cross connectors to prevent electrical shock
- ❒ Can only be removed with a screwdriver
- ❒ Extended covers available to prevent tampering with terminal block

DQS certificates for all company divisions

- ❒ Quality standard as per DIN ISO 9001 in development, production and assembly
- ❒ Continued control of the quality standard by means of regular internal and external quality audits
- ❒ Compatible with certificates of other countries:
  - BSI Certificate, Great Britain
  - SQS Certificate, Switzerland
  - Aib-Vincotte Certificate, Belgium
  - ÖQS Certificate, Austria

Material

❒ Metal parts

Special alloys enable a low contact resistance and provide a gas-tight contact area

Clamping body/clamping screws: steel, zinc-plated and dichromated

Current carrying bar: tin-plated copper

❒ Insulation material

Polyamide has excellent electrical, chemical and mechanical characteristics

Insulating housings: Polyamide 66/6

Tracking current resistance: CTI 600

Flammability class: UL 94-V0

(also see master catalog section ***facts*** & DATA: Technical information)

You can use our ***wieplan*** software to configure your own terminal block assemblies (see page 10/11).

Note:

The information regarding cross sectional area and connection types pertains to unprepared wires without ferrules.

The voltage ratings apply to the terminals in their intended application. When different products are mounted adjacent to each other, the proper isolation distances must be adhered to. For this purpose, **Wieland** offers a large selection of appropriate accessories.

A detailed description of technical data, the standards' requirements, and the applica-tion conditions can be found in part catalog section ***facts*** & DATA: "Technical information".

Terminal blocks with screw connection for junction boxes, type *WKI*

selos BIT

Additional colors available on request:
Contact Factory

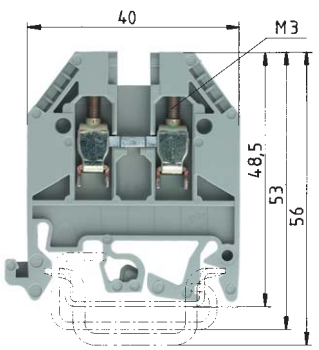

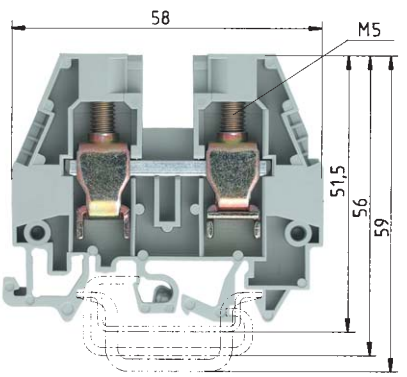

		WK 4/U				WKI 10/U			
		fine stranded	solid	V	A	fine stranded	stranded	V	A
EN 60 947-7-1/DIN VDE 0611 T1		0.5 – 4 mm²	0.5 – 6 mm²	800 V/8 kV/3	32	1 – 10 mm²	10 – 16 mm²	400 V/6 kV/3	57
UL ratings	field-/factory	No. 22-10 AWG		600 V	30/35	No. 16-6 AWG		600 V	65/65
wiring		No. 20-10 AWG		600 V	40	No. 16-6 AWG		600 V	70
CSA ratings		6 mm			9 mm	10 mm			18 mm
Width	Wire strip length								
Approvals		SEV-EEX, BKI-EEx							

		Type	Part no.	Std. pack	Type	Part no.	Std. pack
Feed through block	Color: gray	WK 4/U	57.504.0055.0	100	WKI 10/U	57.510.1155.0	50
Feed through block	Color: blue	WK 4/U BLAU	57.504.0055.6	100	WKI 10/U BLAU	57.510.1155.6	50
Accessories							
1. Mounting rail TS 35, DIN rail 7.5mm high	L = 2 m	35 x 27 x 7,5 EN 60715	98.300.0000.0	1	35 x 27 x 7,5 EN 60715	98.300.0000.0	1
Mounting rail TS 35, DIN rail 15mm high	L = 2 m	35 x 27 x 15 EN 60715	98.360.0000.0	1	35 x 27 x 15 EN 60715	98.360.0000.0	1
2. End clamp for TS 35, with screw	8 mm wide	9708/2 S35	Z5.522.8553.0	100	9708/2 S35	Z5.522.8553.0	100
End clamp for TS 35, without screws	8 mm wide	WEF 1/35	Z5.523.9353.0	100	WEF 1/35	Z5.523.9353.0	100
3. End plate 1.5 mm thick	Color: gray	AP 2,5-4	07.311.0155.0	10			
1.5 mm thick	Color: blue	AP 2,5-4 BLAU	07.311.0155.6	10			
1.5 mm thick	Color: green						
End plate 2 mm thick	Color: gray				API 10-16	07.311.9455.0	10
2 mm thick	Color: blue				API 10-16 BLAU	07.311.9455.6	10
2 mm thick	Color: green						
4. Partition plate	Color: gray	TW 2,5-4	07.311.1155.0	10			
	Color: blue	TW 2,5-4 BLAU	07.311.1155.6	10			
5. Cross connector with screws (jumper bar)	2pole	IVB WK 4-2	Z7.281.1227.0	10	IVB WKN 10-2	Z7.283.2227.0	10
insulated	3pole	IVB WK 4-3	Z7.281.1327.0	10	IVB WKN 10-3	Z7.283.2327.0	10
	4pole	IVB WK 4-4	Z7.281.1427.0	10	IVB WKN 10-4	Z7.283.2427.0	10
	5pole	IVB WK 4-5	Z7.281.1527.0	10	IVB WKN 10-5	Z7.283.2527.0	10
	6pole	IVB WK 4-6	Z7.281.1627.0	10	IVB WKN 10-6	Z7.283.2627.0	10
6. Partition plate with marking facility	Color: yellow	TS 4 GELB	07.311.2153.8	10	TS 10 GELB	07.311.2353.8	10
7. Cover with marking facility	Color: yellow	AD VB 4 GELB	04.326.2153.8	10	AD VB 10 GELB	04.342.1056.8	10
8. Cover with warning symbol over 4 blocks	Color: yellow	AD 4/4 GELB	04.343.4856.8	10			
Cover with warning symbol for 1 block	Color: yellow				ADI 10/1 GELB	04.325.8553.8	10
9. Busbar							
E-Cu 10 x 3 mm, tin-plated, I_N = 140	L = 1 m						
E-Cu 10 x 3 mm, unplated, I_N = 140 A	L = 1 m						
10. Connector clamp for busbar							
16 mm²	8.5 mm wide						
35 mm²	17 mm wide						
11. Busbar support	4 mm wide						
Busbar support	8 mm wide						
Marking accessories see page 48/49 and page 90/91							

selos

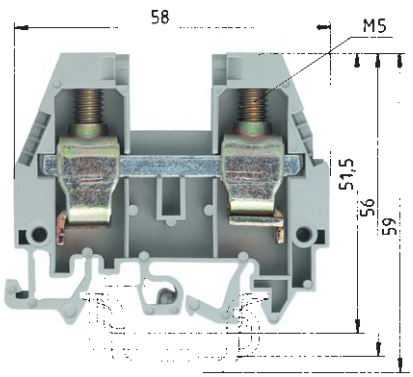

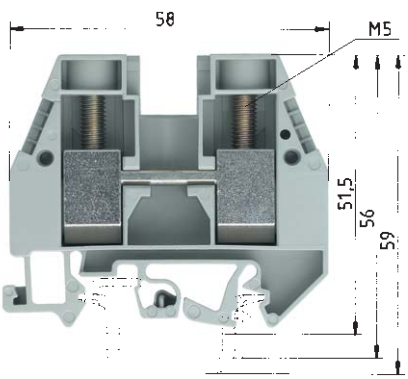

WKI 16/U

fine stranded	stranded	V	A
1 – 16 mm²	10 – 25 mm²	400 V/6 kV/3	76
No. 12-4 AWG		600 V	65/90
No. 14-4 AWG		600 V	95
12 mm			16 mm

WKI 35/U

fine stranded	stranded	V	A
16 – 35 mm²	16 – 50 mm²	400 V/6 kV/3	125
No. 10-2 AWG		600 V	95/95
No. 10-2 AWG		600 V	110
16 mm			13 mm

Type	Part no.	Std. pack	Type	Part no.	Std. pack
WKI 16/U	57.516.1155.0	50	WKI 35/U	57.535.1155.0	20
WKI 16/U BLAU	57.516.1155.6	50	WKI 35/U BLAU	57.535.1155.6	20
35 x 27 x 7,5 EN 60715	98.300.0000.0	1	35 x 27 x 7,5 EN 60715	98.300.0000.0	1
35 x 27 x 15 EN 60715	98.360.0000.0	1	35 x 27 x 15 EN 60715	98.360.0000.0	1
9708/2 S 35	Z5.522.8553.0	100	9708/2 S 35	Z5.522.8553.0	100
API 10-16	07.311.9455.0	10	API 35	07.311.8855.0	10
API 10-16 BLAU	07.311.9455.6	10	API 35 BLAU	07.311.8855.6	10
IVB WKI 16-2	Z7.284.9227.0		IVB WKI 35-2	Z7.285.4227.0	5
IVB WKI 16-3	Z7.284.9327.0		IVB WKI 35-3	Z7.285.4327.0	5
IVB WKI 16-4	Z7.284.9427.0		IVB WKI 35-4	Z7.285.4427.0	5
IVB WKI 16-5	Z7.284.9527.0		IVB WKI 35-5	Z7.285.4527.0	5
IVB WKI 16-6	Z7.284.9627.0		IVB WKI 35-6	Z7.285.4627.0	5
TS 16 GELB	07.311.2453.8	10	TS 35 GELB	07.311.8653.8	10
AD VB 16 GELB	04.326.2453.8	10			
ADI 16/1 GELB	04.325.8653.8	10	ADI 35/1 GELB	04.325.8753.8	

Neutral disconnect blocks with screw connection for junction boxes, type *WKI*

selos BIT

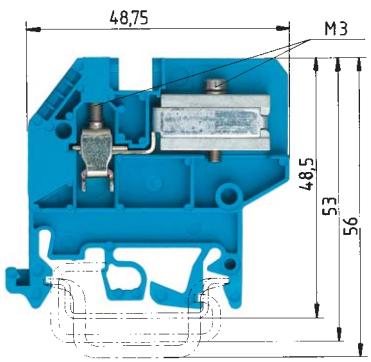

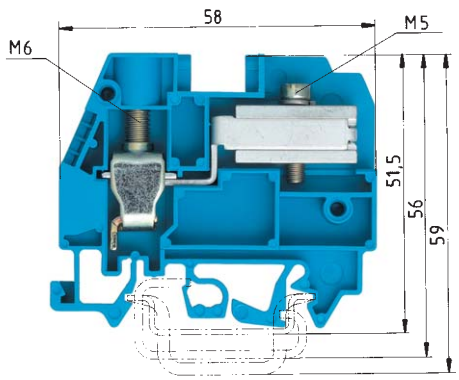

	WKN 4 ETK/U	WKI 10 ETK/U
Current carrying capability:		
fine stranded:	4 mm² 25 A	10 mm² 45 A
solid:	6 mm² 30 A	stranded: 16 mm² 50 A
	fine stranded solid V A	fine stranded stranded V A
EN 60 947-7-1/DIN VDE 0611 T1	0.5 – 4 mm² 0.5 – 6 mm² 400 V/6 kV/3**)	1 – 10 mm² 10 – 16 mm² 400 V/6 kV/3**)
UL ratings	UL pending	
CSA ratings	No. 20-10 AWG 600 V 25	No. 16-6 AWG 600 V 45
Width / Wire strip length	6 mm 9 mm	10 mm 13 mm
Approvals		

		Type	Part no.	Std. pack	Type	Part no.	Std. pack
Neutral-disconnect block	Color: blue	WKN 4 ETK/U	57.504.8155.0	100	WKI 10 ETK/U	57.510.8255.0	50
Connector clamp for Cu busbar	Color: blue						
	Color: unplated						
Accessories							
1. Mounting rail TS 35, DIN rail 7.5 mm high	L = 2 m	35 x 27 x 7,5 EN 60715	98.300.0000.0	1	35 x 27 x 7,5 EN 60715	98.300.0000.0	1
Mounting rail TS 35, DIN rail 15 mm high	L = 2 m	35 x 27 x 15 EN 60715	98.360.0000.0	1	35 x 27 x 15 EN 60715	98.360.0000.0	1
2. End clamp for TS 35, with screw	8 mm wide	9708/2 S35	Z5.522.8553.0	100	9708/2 S35	Z5.522.8553.0	100
End clamp for TS 35, without screws	8 mm wide	WEF 1/35	Z5.523.9353.0	100	WEF 1/35	Z5.523.9353.0	100
3. End plate 1.5 mm thick	Color: gray						
1.5 mm thick	Color: blue	APN 4 ETK	07.311.1155.0	10	API 10-16 ETK/1	07.312.1955.0	10
1.5 mm thick	Color: green						
End plate 2 mm thick	Color: gray						
2 mm thick	Color: blue						
2 mm thick	Color: green						
4. Partition plate	Color: gray						
	Color: blue						
5. Cross connector with screws (jumper bar)	2pole						
insulated	3pole						
	4pole						
	5pole						
	6pole						
6. Partition plate with marking facility	Color: yellow						
7. Cover with marking facility	Color: yellow						
8. Cover with warning symbol over 4 blocks	Color: yellow						
Cover with warning symbol for 1 block	Color: yellow						
9. Busbar							
E-Cu 10 x 3 mm, tin-plated, I_N = 140 A	L = 1 m	9813 M	98.290.0000.0	1	9813 M	98.290.0000.0	1
E-Cu 10 x 3 mm, unplated, I_N = 140 A	L = 1 m	9813 M SN	98.290.1000.0	1	9813 M SN	98.290.1000.0	1
10. Connector clamp for busbar							
16 mm²	8.5 mm wide	WAK 16/2 BLAU	30.494.3021.0		WAK 16/2 BLAU	30.494.3021.0	
35 mm²	17 mm wide	WAK 35/2	30.494.4121.0	50	WAK 35/2	30.494.4121.0	50
11. Busbar support	4 mm wide	WKI SH/U	01.108.3255.0	10	WKI SH/U	01.108.3255.0	10
Busbar support	8 mm wide	WKIF SH/E/35	Z1.108.8453.0	10	WKIF SH/E/35	Z1.108.8453.0	10
Marking accessories see page 48/49 and page 90/91							

Connector clamp for Cu busbar (10 x 3 mm), type *WAK*

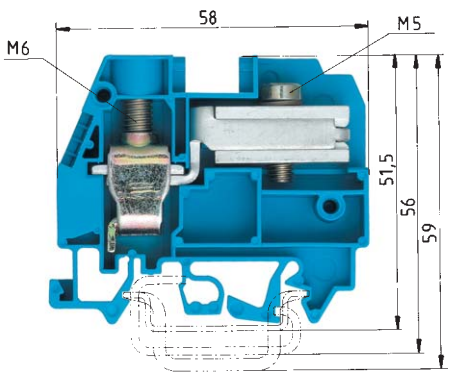

Current carrying capability:
fine stranded: 16 mm² 62 A
stranded: 25 mm² 67 A

WKI 16 ETK/U

fine stranded	stranded	V	A
1 – 16 mm²	10 – 25 mm²	400 V/6 kV/3**)	
No. 14-4 AWG		600 V	65
12 mm			15 mm

Type	Part no.	Std. pack
WKI 16 ETK/U	57.516.8255.0	50
35 x 27 x 7,5 EN 60715	98.300.0000.0	1
35 x 27 x 15 EN 60715	98.360.0000.0	1
9708/2 S35	Z5.522.8553.0	100
API 10-16 ETK/1	07.312.1955.0	10
9813 M	98.290.0000.0	1
9813 M SN	98.290.1000.0	1
WAK 16/2 BLAU	30.494.3021.0	
WAK 35/2	30.494.4121.0	50
WKI SH/U	01.108.3255.0	10
WKIF SH/E/35	Z1.108.8453.0	10

EN 60 998-2-1 CCA/CH

WAK 16/2

fine stranded	stranded	V	A
1.5 – 16 mm²	10 – 16 mm²		76
8.4 mm			16 mm

Type	Part no.	Std. pack
WAK 16/2 BLAU	30.494.3021.6	100
9813 M	98.290.0000.0	1
9813 M SN	98.290.1000.0	1
WKI SH/U	01.108.3255.0	10
WKIF SH/E/35	Z1.108.8453.0	10

EN 60 998-2-1 CCA/CH

WAK 35/2

fine stranded	stranded	V	A
16 – 35 mm²	16 – 35 mm²		125
17 mm			14 mm

Type	Part no.	Std. pack
WAK 35/2 BLAU	30.494.4121.6	
WAK 35/2	30.494.4121.0	50
9813 M	98.290.0000.0	1
9813 M SN	98.290.1000.0	1
WKI SH/U	01.108.3255.0	10
WKIF SH/E/35	Z1.108.8453.0	10

Ground blocks with screw connection for junction boxes, type *WKI SL*

selos BIT

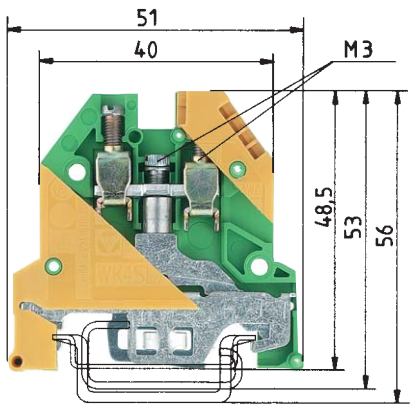

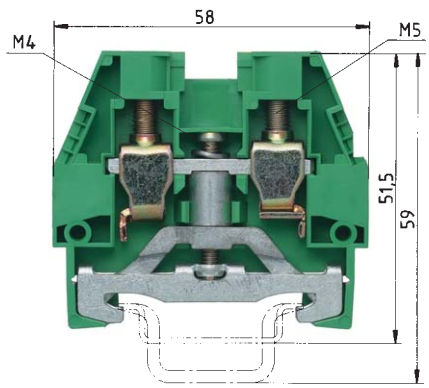

*) Ratings of adjacent feed-through block same series and size

enclosed design

	WK 4 SL/U				WKI 10/35			
	fine stranded	solid	V	A	fine stranded	solid/stranded	V	A
EN 60 947-7-2/DIN VDE 0611 T3	0.5 – 4 mm²	0.5 – 6 mm²	800 V/8 kV/3*)		1 – 10 mm²	1.5 – 16 mm²	800 V/8 kV/3*)	
UL ratings	No. 22-10 AWG		600 V		No. 16-6 AWG		600 V	
CSA ratings	No. 22-10 AWG				No. 16-6 AWG			
Width	6 mm				10 mm			
Wire strip length				9 mm				18 mm
Approvals	EPM SEV-EEX BKI-EEx							

	Type	Part no.	Std. pack	Type	Part no.	Std. pack
Ground block Color: green/yellow	WK 4 SL/U	57.504.9055.0	100	WKI 10 SL/35	56.510.9255.0	50
Accessories						
1. Mounting rail TS 35, DIN rail 7.5 mm high L = 2 m	35 x 27 x 7,5 EN 60715	98.300.0000.0	1	35 x 27 x 7,5 EN 60715	98.300.0000.0	1
Mounting rail TS 35, DIN rail 15 mm high L = 2 m	35 x 27 x 15 EN 60715	98.360.0000.0	1	35 x 27 x 15 EN 60715	98.360.0000.0	1
2. End clamp for TS 35, with screw 8 mm wide	9708/2 S35	Z5.522.8553.0	100	9708/2 S35	Z5.522.8553.0	100
End clamp for TS 35, without screws 8 mm wide	WEF 1/35	Z5.523.9353.0	100	WEF 1/35	Z5.523.9353.0	100
3. End plate 1.5 mm thick Color: gray						
1.5 mm thick Color: blue						
1.5 mm thick Color: green				API 10-16 SL	07.311.9555.0	10
End plate 2 mm thick Color: gray						
2 mm thick Color: blue						
2 mm thick Color: green						
4. Partition plate Color: gray						
Color: blue						
5. Cross connector with screws (jumper bar) 2pole						
insulated 3pole						
4pole						
5pole						
6pole						
6. Partition plate with marking facility Color: yellow						
7. Cover with marking facility Color: yellow	AD VB4 GELB	04.326.2153.8	10	AD VB 10 GELB	04.326.2353.8	10
8. Cover with warning symbol over 4 blocks Color: yellow	AD 4/4 GELB	04.343.5856.8				
Cover with warning symbol for 1 block Color: yellow				AD 10/1 GELB	04.325.8553.8	10
9. Busbar						
E-Cu 10 x 3 mm, tin-plated, I_N = 140 A L = 1 m						
E-Cu 10 x 3 mm, unplated, I_N = 140 A L = 1 m						
10. Connector clamp for busbar						
16 mm² 8.5 mm wide						
35 mm² 17 mm wide						
11. Busbar support 4 mm wide						
Busbar support 8 mm wide						
Marking accessories see page 48/49 and page 90/91						

selos

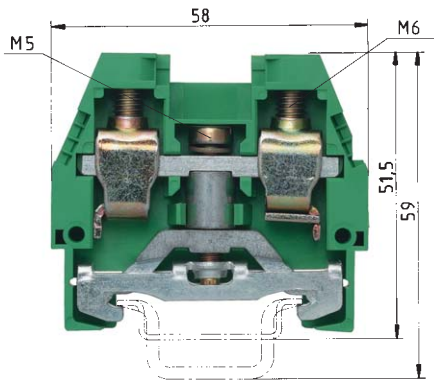

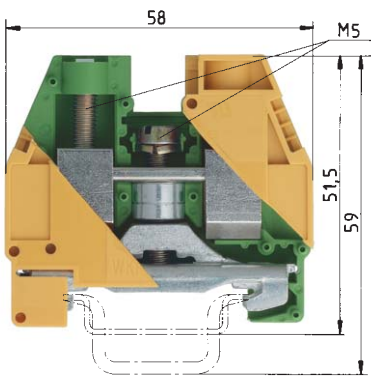

enclosed design

WKI 16 SL/35

fine stranded	solid/stranded	V	A
1 – 16 mm²	1.5 – 25 mm²	400 V/6 kV/3*)	
No. 12-4 AWG		600 V	
No. 14-4 AWG			
12 mm			16 mm

WKI 35 SL/35

fine stranded	stranded	V	A
16 – 35 mm²	16 – 50 mm²	400 V/6 kV/3*)	
UL pending			
No. 10-2 AWG			
16 mm			13 mm

Type	Part no.	Std. pack	Type	Part no.	Std. pack
WKI 16 SL/35	56.516.9255.0	50	WKI 35 SL/35	56.535.9255.0	20
35 x 27 x 7,5 EN 60715	98.300.0000.0	1	35 x 27 x 7,5 EN 60715	98.300.0000.0	1
35 x 27 x 15 EN 60715	98.360.0000.0	1	35 x 27 x 15 EN 60715	98.360.0000.0	1
9708/2 S35	Z5.522.8553.0	100	9708/2 S35	Z5.522.8553.0	100
API 10-16 SL	07.311.9555.0	10			
AD VB 16 GELB	04.326.2453.8	10	AD VB 10 GELB	04.326.2353.8	10
AD 16/1 GELB	04.325.8653.8	10	AD 35/1 GELB	04.325.8753.8	

PEN assembly block with screw connection for junction boxes, type *WKI...*

selos BIT

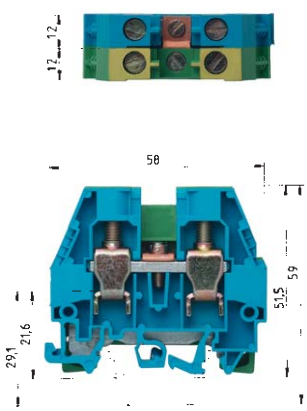

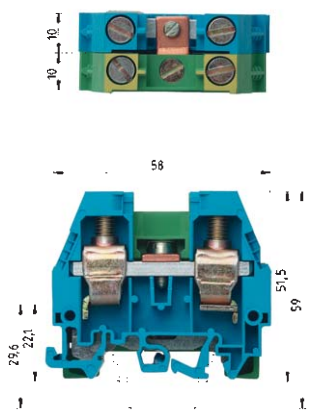

		WKI 10 PEN/35				WKI 16 PEN/35			
		fine stranded	solid/stranded	V	A	fine stranded	solid/stranded	V	A
EN 60 947-7-1, EN 60 947-7-2		1 – 10 mm²	1.5 – 16 mm²	400 V/6 kV/3	57	1 – 16 mm²	1.5 – 25 mm²	400 V/6 kV/3	76
UL ratings		No. 16-6 AWG		600 V	65/65	No. 12-4 AWG		600 V	65/65
CSA ratings		No. 16-6 AWG		600 V	70	No. 14-4 AWG		600 V	95
Width	Wire strip length	20 mm			18 mm	24 mm			16 mm
Approvals									

		Type	Part no.	Std. pack	Type	Part no.	Std. pack
PEN assembly block	Color: green/yellow – blue	WKI 10 PEN/35	56.510.9455.0	20	WKI 16 PEN/35	56.516.9455.0	20
Accessories							
1. Mounting rail TS 35, DIN rail 7.5mm high	L = 2 m	35 x 27 x 7,5 EN 60715	98.300.0000.0	1	35 x 27 x 7,5 EN 60715	98.300.0000.0	1
Mounting rail TS 35, DIN rail 15mm high	L = 2 m	35 x 27 x 15 EN 60715	98.360.0000.0	1	35 x 27 x 15 EN 60715	98.360.0000.0	1
2. End clamp for TS 35, with screw	8 mm wide	9708/2 S35	Z5.522.8553.0	100	9708/2 S35	Z5.522.8553.0	100
End clamp for TS 35, without screws	8 mm wide	WEF 1/35	Z5.523.9353.0	100			
3. End plate 1.5 mm thick	Color: gray						
1.5 mm thick	Color: blue	API 10-16 BLAU	07.311.9455.6	10	API 10-16 BLAU	07.311.9455.6	10
1.5 mm thick	Color: green						
End plate 2 mm thick	Color: gray						
2 mm thick	Color: blue						
2 mm thick	Color: green						
4. Partition plate	Color: gray						
	Color: blue						
5. Cross connector with screws (jumper bar)	2pole						
insulated	3pole						
	4pole						
	5pole						
	6pole						
6. Partition plate with marking facility	Color: yellow	TS 10 GELB	07.311.2353.8	10	TS 16 GELB	07.311.2453.8	10
7. Cover with marking facility	Color: yellow	AD VB 10 GELB	04.326.2353.8	10	AD VB 16 GELB	04.326.2453.8	10
8. Cover with warning symbol over 4 blocks	Color: yellow						
Cover with warning symbol for 1 block	Color: yellow	ADI 10/1 GELB	04.325.8553.8	10	AD 16/1 GELB	04.325.8653.8	10
9. Busbar							
E-Cu 10 x 3 mm, tin-plated, I_N = 140 A	L = 1 m						
E-Cu 10 x 3 mm, unplated, I_N = 140 A	L = 1 m						
10. Connector clamp for busbar							
16 mm²	8.5 mm wide						
35 mm²	17 mm wide						
11. Busbar support	4 mm wide						
Busbar support	8 mm wide						
Marking accessories see page 48/49 and page 90/91							

selos

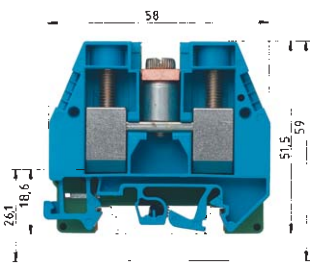

WKI 35 PEN/35

fine stranded	stranded	V	A
16 – 35 mm²	16 – 50 mm²	400 V/6 kV/3	125
No. 10-2 AWG		600 V	95/95
No. 10-2 AWG		600 V	110
32 mm			13 mm

Type	Part no.	Std. pack
WKI 35 PEN/35	56.535.9455.0	10
35 x 27 x 7,5 EN 60715	98.300.0000.0	1
35 x 27 x 15 EN 60715	98.360.0000.0	1
9708/2 S35	Z5.522.8553.0	100
API 35 BLAU	07.311.8855.6	10
TS 35 GELB	07.311.8653.8	10
AD 35/1 GELB	04.325.8753.8	

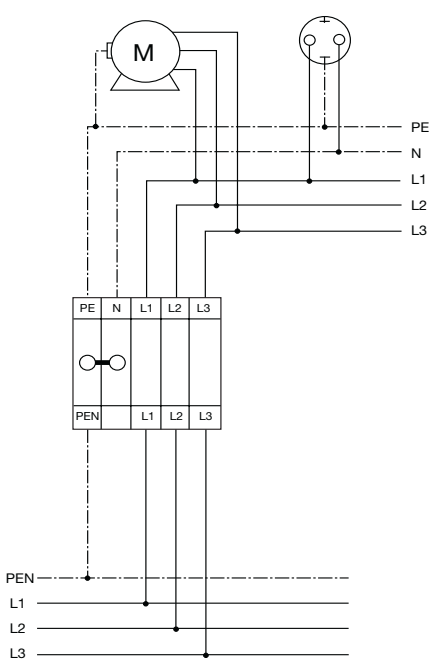

PEN assembly block for junction box
IEC 947-7-2
EN 60947-7-2

Electrical power is often supplied to the plant in a 4 conductor three phase system (L1, L2, L3, and Ground). However, the electrical equipment in the plant may require a 5 conductor three phase system (L1, L2, L3, N, and Ground). Therefore, it is important to have a connection system to accommodate both possibilities.

The Wieland WKI ... PEN/35 system accomplishes this task. The PEN assembly terminal block consists of a ground terminal which is grounded to the DIN rail and a neutral terminal (color coded blue) which is electrically isolated from the DIN rail. The two terminals are commoned via a cross connector (jumper bar) thereby, tying the neutral terminal to ground.

When using the PEN assembly terminal block system, the DIN mounting rail only acts as a grounding bus. Therefore, copper mounting rail is not required and standard zinc plated steel DIN can be used for grounding purposes.

These assemblies have the same symmetry as the corresponding feed through terminals of the WKI series and fit the height required for junction boxes per DIN 43871 when using DIN rail size 35 x 27 x 7.5.

Accessories for DIN rail Terminal blocks with screw connection for junction boxes

selos BIT

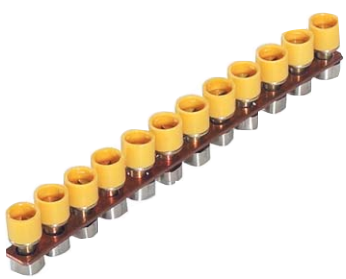

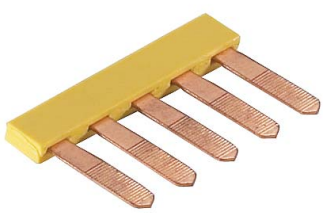

Cross connectors (jumper bars) for installation blocks

Type	Part no.	Std. pack
for terminal blocks type		
WKI 4 D-D		
WKI 4 DU		
WKI 4 N-D-SL		
WKI 4 NT-D-SL... (and variants)		
WKI 4 NTN-D-SL		
WKI 4 TKG-D-SL		
WKI 4 D-D-SL		
Cross connectors, uninsulated (jumper bars)		
2pole 9703/6-2	Z7.211.0227.0	50
3pole 9703/6-3	Z7.211.0327.0	50
4pole 9703/6-4	Z7.211.0427.0	50
5pole 9703/6-5	Z7.211.0527.0	50
6pole 9703/6-6	Z7.211.0627.0	50
70pole 9703/6 M-70	Z7.211.0027.0	10
Cross connectors, insulated (jumper bars)		
12pole IVB WKI 4-12	Z7.271.5227.0	10

Insulated jumper combs for installation blocks

Type	Part no.	Std. pack
for terminal blocks type		
WKI 4 D-D		
WKI 4 DU		
WKI 4 N-D-SL		
WKI 4 NT-D-SL... (and variants)		
WKI 4 NTN-D-SL		
WKI 4 TGK-D-SL		
WKI 4 D-D-SL		
0.5 mm thick, 6 mm spacing Color: yellow		
2pole IVB 0,5 WK 4..-2	Z7.255.0227.0	10
3pole IVB 0,5 WK 4..-3	Z7.255.0327.0	10
4pole IVB 0,5 WK 4..-4	Z7.255.0427.0	10
5pole IVB 0,5 WK 4..-5	Z7.255.0527.0	10
6pole IVB 0,5 WK 4..-6	Z7.255.0627.0	10
7pole IVB 0,5 WK 4..-7	Z7.255.0727.0	10
8pole IVB 0,5 WK 4..-8	Z7.255.0827.0	10
9pole IVB 0,5 WK 4..-9	Z7.255.0927.0	10
10pole IVB 0,5 WK 4..-10	Z7.255.1027.0	10
11pole IVB 0,5 WK 4..-11	Z7.255.1127.0	10
12pole IVB 0,5 WK 4..-12	Z7.255.1227.0	10
1 mm thick, 6 mm spacing Color: yellow		
2pole IVB 1 WK 4..-2	Z7.255.4227.0	10
3pole IVB 1 WK 4..-3	Z7.255.4327.0	10
4pole IVB 1 WK 4..-4	Z7.255.4427.0	10
5pole IVB 1 WK 4..-5	Z7.255.4527.0	10
6pole IVB 1 WK 4..-6	Z7.255.4627.0	10
7pole IVB 1 WK 4..-7	Z7.255.4727.0	10
8pole IVB 1 WK 4..-8	Z7.255.4827.0	10
9pole IVB 1 WK 4..-9	Z7.255.4927.0	10
10pole IVB 1 WK 4..-10	Z7.255.5027.0	10
11pole IVB 1 WK 4..-11	Z7.255.5127.0	10
12pole IVB 1 WK 4..-12	Z7.255.5227.0	10

Cover with warning symbol

Type	Part no.	Std. pack
for terminal blocks type		
Cover with warning symbol over 4 blocks		
WK 4		
AD 4/4 GELB	04.343.5856.6	10
Cover with warning symbol for 1 block		
WKI 10		
AD 10/1 GELB	04.325.8553.8	10
WKI 16		
AD 16/1 GELB	04.325.8653.8	10
WKI 35		
AD 35/1 GELB	04.325.8753.0	10

selos

Uninsulated cross connectors (jumper bars) for feed-through blocks

Type	Part no.	Std. pack
for terminal blocks type		
WK 4/U		
2pole VB WK 4-2	Z7.281.0227.0	10
3pole VB WK 4-3	Z7.281.0327.0	10
4pole VB WK 4-4	Z7.281.0427.0	10
5pole VB WK 4-5	Z7.281.0527.0	10
6pole VB WK 4-6	Z7.281.0627.0	10
70pole VB WK 4 M-70	Z7.281.0027.0	10
WKI 10/U		
2pole VB WKI 10-2	Z7.288.0227.0	10
3pole VB WKI 10-3	Z7.288.0327.0	10
4pole VB WKI 10-4	Z7.288.0427.0	10
5pole VB WKI 10-5	Z7.288.0527.0	10
6pole VB WKI 10-6	Z7.288.0627.0	10
40pole VB WKI 10 M-40	Z7.288.0027.0	10
WKI 16/U		
2pole VB WKI 16-2	Z7.289.0227.0	10
3pole VB WKI 16-3	Z7.289.0327.0	10
4pole VB WKI 16-4	Z7.289.0427.0	10
5pole VB WKI 16-5	Z7.289.0527.0	10
6pole VB WKI 16-6	Z7.289.0627.0	10
20pole VB WKI 16 M-20	Z7.289.0027.0	10

Partition plates with marking facility Cover with marking facility

Type	Part no.	Std. pack
Partition plate with marking facility		
Color: yellow		
for terminal blocks type		
WK 4/U		
TS 4 YELLOW		
WKI 10		
TS 10 YELLOW		
WKI 16		
TS 16 YELLOW		
WKI 35		
TS 35 YELLOW		
Cover with marking facility		
for cross connector	**Color: yellow**	
for terminal blocks type		
WK 4		
AD VB 4 YELLOW		
WKI 10		
AD VB 10 YELLOW		
WKI 16		
AD VB 16 YELLOW		

Insulated cross connectors (jumper bars) for feed-through blocks

Type	Part no.	Std. pack
for terminal blocks type		
WK 4/U		
2pole IVB WK 4-2	Z7.281.1227.0	10
3pole IVB WK 4-3	Z7.281.1327.0	10
4pole IVB WK 4-4	Z7.281.1427.0	10
5pole IVB WK 4-5	Z7.281.1527.0	10
6pole IVB WK 4-6	Z7.281.1627.0	10
7pole IVB WK 4-7	Z7.281.1727.0	10
8pole IVB WK 4-8	Z7.281.1827.0	10
9pole IVB WK 4-9	Z7.281.1927.0	10
10pole IVB WK 4-10	Z7.281.2027.0	10
11pole IVB WK 4-11	Z7.281.2127.0	10
12pole IVB WK 4-12	Z7.281.2227.0	10
WKI 10/U		
2pole IVB WKN 10-2	Z7.283.2227.0	10
3pole IVB WKN 10-3	Z7.283.2327.0	10
4pole IVB WKN 10-4	Z7.283.2427.0	10
5pole IVB WKN 10-5	Z7.283.2527.0	10
6pole IVB WKN 10-6	Z7.283.2627.0	10
WKI 16/U		
2pole IVB WKI 16-2	Z7.284.9227.0	10
3pole IVB WKI 16-3	Z7.284.9327.0	10
4pole IVB WKI 16-4	Z7.284.9427.0	10
5pole IVB WKI 16-5	Z7.284.9527.0	10
6pole IVB WKI 16-6	Z7.284.9627.0	10
WKI 35/U		
2pole IVB WKI 35-2	Z7.285.4227.0	5
3pole IVB WKI 35-3	Z7.285.4327.0	5
4pole IVB WKI 35-4	Z7.285.4427.0	5
5pole IVB WKI 35-5	Z7.285.4527.0	5
6pole IVB WKI 35-6	Z7.285.4627.0	5

Accessories for DIN rail terminal blocks for junction boxes

fasis BIT
selos BIT

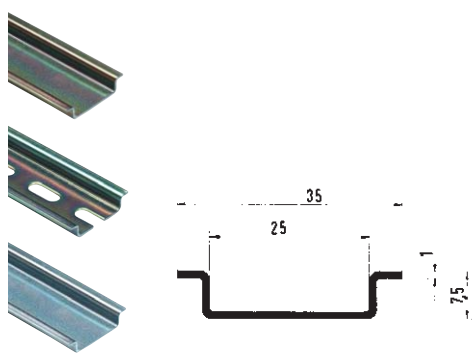

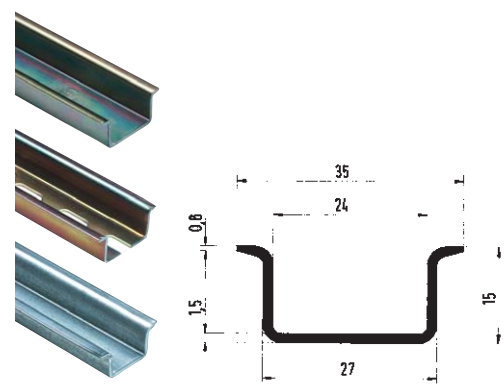

Mounting rail 35 x 7.5
accord. to DIN EN 60715

Mounting rail 35 x 15
accord. to DIN EN 60715

			Type	Part no.	Std. pack		Type	Part no.	Std. pack	
Mounting rail										
1. Steel, galv. zinc-plated and dichromated,unslotted		L = 2 m	35 x 27 x 7.5 EN 60715	98.300.0000.0	1		35 x 27 x 15 EN 60715	98.370.0000.0	1	
Steel, galv. zinc-plated and dichromated,slotted		L = 2 m	35 x 27 x 7.5 EN 60715 slotted	98.300.1000.0	1		35 x 27 x 15 EN 60715	98.370.1000.0	1	
2. Steel, unplated	unslotted	L = 2 m	35 x 27 x 7.5 EN 60715 unplated	98.300.0010.0	1					
Steel, unplated	slotted	L = 2 m								
3. Steel, hot-galvanized	unslotted	L = 2 m								
Steel, hot-galvanized	slotted	L = 2 m								
4. E copper	unslotted	L = 2 m								
E copper	slotted	L = 2 m								
5. Aluminium	unslotted	L = 2 m		98.750.0000.0	1	*				
	slotted	L = 1 m		98.800.1000.0	1	*				
6. Stainless steel	unslotted	L = 2 m		98.330.0000.0	1	*				
			*available in North America only							
End clamp										
5. End clamp for TS 35, with screw		8 mm wide								
6. End clamp for TS 35, with screw		8/17.5 mm wide								
with marking facility										
for block assemblies										
7. End clamp for TS 35, screwless		8 mm wide								
8. End clamp for TS 35, screwless		8/17.5 mm wide								
with marking facility										
for block assemblies										
9. Marking card in perforated sheets										
(1 sheet = 100 single tags)										

fasis

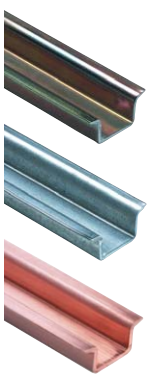

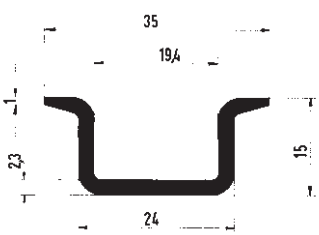

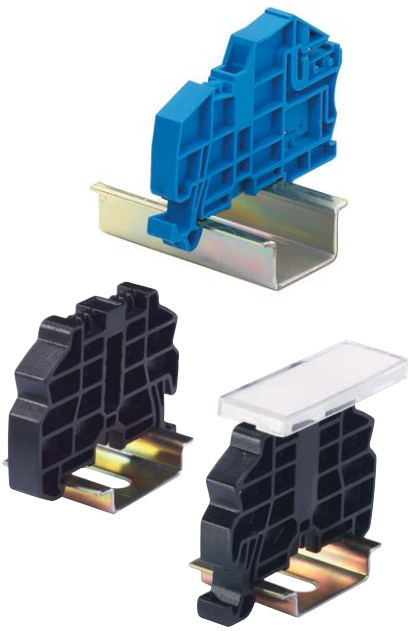

Mounting rail 35 x 15
accord. to DIN EN 60715

Type	Part no.	Std. pack
35 x 27 x 15 EN 60715	98.360.0000.0	1
35 x 27 x 15 EN 60715 ZN	98.360.0004.0	1
35 x 27 x 15 EN 60715 CU	98.380.0000.0	10

End clamp for TS 35
fixed with screw

Type	Part no.	Std. pack
9708/2 S 35	Z5.522.8553.0	100
9708/2 BS/35	69.920.0553.0	100
	04.019.0289.0	10

End clamp for TS 35
fixed without screw

Type	Part no.	Std. pack
WEF 1/35	Z5.523.9353.0	100
WEF 1 BS/35	69.920.1053.0	100
WKIF SH/E/35	Z1.108.8453.0	10
BS/R	Z4.243.8453.0	
	04.019.0289.0	10

Marking accessories for DIN rail terminal blocks for junction boxes

fasis BIT
selos BIT

Material:
Polyamide 66/6
Color: black figures on white background

DIN rail terminal blocks, type WKF, can take in marking tags on both sides on top of the block in a 3-chamber slot. It can be either 3 single number tags from the tear-off marking strip , or single tags, or marking strips.

1. **Marking strips** marked and unmarked, made from Polyamide 66/6, suitable for10 blocks in a row.

   Marking 1-10, 11-20 etc. up to 991-999.
   Type 9705 A/5/10 (5 mm spacing)
   for terminal blocks type WKIF 2.5...
   Type 9705 A/6/10 (6 mm spacing)
   for terminal blocks type WK/WKF 4...
   Type 9705 A/5/10/5 B (10 mm spacing)
   for terminal blocks type WKI/WKF 10...
   Type 9705 A/6/10/5 B (12 mm spacing)
   for terminal blocks type WKI/WKIF 16...
   Type 9705 A/8/10/5 B (16 mm spacing)
   for terminal blocks type WKI 35...

2. **Tear-off marking strip** with 10 marking tags, made from Polyamide 66/6, white, marked and unmarked.

   This marking system considerably reduces the time required for marking terminal block rows. For numerical marking of terminal block rows only 11 stock positions are required. As the time used for picking and attaching the tags is reduced, and as stockkeeping is low and the prices extremely favorable , enormous cost savings are the result from using these tear-off marking strips.

   Type 9704 A...
   (see page 180)

3. **Single marking tag** made from white Polyamide 66/6, marked and unmarked.
   Type 9705 A...

Marking computer in system kit

Type	Part no.	Std. pack
Marking computer for markingcards		
marcom 2	95.502.0000.0	1
Description		
wieland marcom 2 is a freely programmable marking computer for marking tags of DIN rail terminal blocks, pluggable connectors, cables and switching devices. The program technology with flexible menu control produces excellent results requiring only few input. Entry of a sequence of figures is automatically limited by the parameters of the selected marking tags, making wrong print-out impossible. Repeated operations can be saved as so-called JOBs and are therefore immediately available for print-out without further entries. The computer disposes of a large number of fonts, with numerical, alphanumerical (small/capital letters) and symbolic characters. **marcom 2** is powered by an attached power supply. For a mains-independent operation, the **marcom 2** Power Pack is available.		
Marking tag plates for ***marcom 2***		
9705 A/5/10/11 marcom	Z4.242.5053.0	10
9705 AL/5/10/6 marcom	Z4.242.5153.0	10
9705 A/6/10/11 marcom	Z4.242.6053.0	10
9705 AL/6/10/6 marcom	Z4.242.6353.0	10
9705 A/8/10/7 marcom	Z4.242.8053.0	10

All terminal block widths

Type	Part no.	Std. pack
Single marking tag, unmarked		
9705 A	04.242.0850.0	500
Single marking tag, marked		
9705 AB*	04.842.0850.0	500
Single marking tag, unmarked with enlarged marking area		
9705 AL	04.242.1553.0	500
Single marking tag, marked for enlarged marking area		
9705 ALB	04.842.1553.0	500

*Custom marking upon request

fasis

2,5 mm²/5 mm Width

Type		Part no.	Std. pack
Marking strips, unmarked			
9705 A/5/10		04.242.5053.0	25
Marking strips, marked			
9705 A/5/9 B	1 - 9	04.842.4953.0	25
9705 A/5/10 B*		04.842.5053.0	25
9705 A/5/10 B	1 - 10	04.845.0153.0	25
	11 - 20	04.845.0253.0	25
	21 - 30	04.845.0353.0	25
	31 - 40	04.845.0453.0	25
	41 - 50	04.845.0553.0	25
	51 - 60	04.845.0653.0	25
	61 - 70	04.845.0753.0	25
	71 - 80	04.845.0853.0	25
	81 - 90	04.845.0953.0	25
	91 - 100	04.845.1053.0	25
	⏚ (10 x)	04.855.0053.0	25
	⏚ (10 x)	04.855.0153.0	25
	+ (10 x)	04.855.0253.0	25
	– (10 x)	04.855.0353.0	25
	L1 (10 x)	04.855.0453.0	25
	L2 (10 x)	04.855.0553.0	25
	L3 (10 x)	04.855.0653.0	25
	PE (10 x)	04.855.0753.0	25
	SL (10 x)	04.855.3153.0	25
	N (10 x)	04.855.3253.0	25
	F1 (10 x)	04.855.0953.0	25
	F2 (10 x)	04.855.1053.0	25
L1, L2, L3, N, PE	(2 x)	04.855.0853.0	25
with enlarged marking area			
9705 AL/5/10		04.242.5153.0	25
*Custom marking upon request			

4 mm²/6 mm Width

Type		Part no.	Std. pack
Marking strips, unmarked			
9705 A/6/10		04.242.6053.0	25
Marking strips, marked			
9705 A/6/9 B	1 - 9	04.842.5953.0	25
9705 A/6/10 B*		04.842.6053.0	25
9705 A/6/10 B	1 - 10	04.846.0153.0	25
	11 - 20	04.846.0253.0	25
	21 - 30	04.846.0353.0	25
	31 - 40	04.846.0453.0	25
	41 - 50	04.846.0553.0	25
	51 - 60	04.846.0653.0	25
	61 - 70	04.846.0753.0	25
	71 - 80	04.846.0853.0	25
	81 - 90	04.846.0953.0	25
	91 - 100	04.846.1053.0	25
	⏚ (10 x)	04.856.0053.0	25
	⏚ (10 x)	04.856.0153.0	25
	+ (10 x)	04.856.0253.0	25
	– (10 x)	04.856.0353.0	25
	L1 (10 x)	04.856.0453.0	25
	L2 (10 x)	04.856.0553.0	25
	L3 (10 x)	04.856.0653.0	25
	PE (10 x)	04.856.0753.0	25
	SL (10 x)	04.856.3153.0	25
	N (10 x)	04.856.3253.0	25
	F1 (10 x)	04.856.0953.0	25
	F2 (10 x)	04.856.1053.0	25
L1, L2, L3, N, PE	(2 x)	04.856.0853.0	25
with enlarged marking area			
9705 AL/6/10		04.242.6353.0	25
*Custom marking upon request			

10 mm²/10 mm Width

16 mm²/12 mm Width

35 mm²/16 mm Width

Type		Part no.	Std. pack
10 mm²/10 mm Width			
marked for 5 blocks (every 2nd tag) *			
9705 A/5/10/5 B		04.842.5553.0	25
16 mm²/12 mm Width			
marked for 5 blocks (every 2nd tag) *			
9705 A/6/10/5 B		04.842.6553.0	25
35 mm²/16 mm Width			
marked for 5 blocks (every 2nd tag) *			
9705 A/8/10/5 B		04.842.8553.0	25
* indicate required marking with part no.			

DIN rail terminal blocks with screw connection, type *WKN*

selos

Rising cage clamp connection **up to 150 mm2**

Standard DIN rail terminal blocks

Fuse blocks

Disconnect blocks

Duo feed through blocks / multi-tier blocks

Initiator / actuator blocks

Micro modular feed through blocks for TS 35

selos accord. to US standard UL 94 V-0

- Elastic clamping body
- Rated cross section: 2.5 to 150 mm^2
- Connection range: 0.5 to 185 mm^2
- Universal foot

All Wieland Components which require CE general certification are CE certified, and identified with the CE logo.

selos

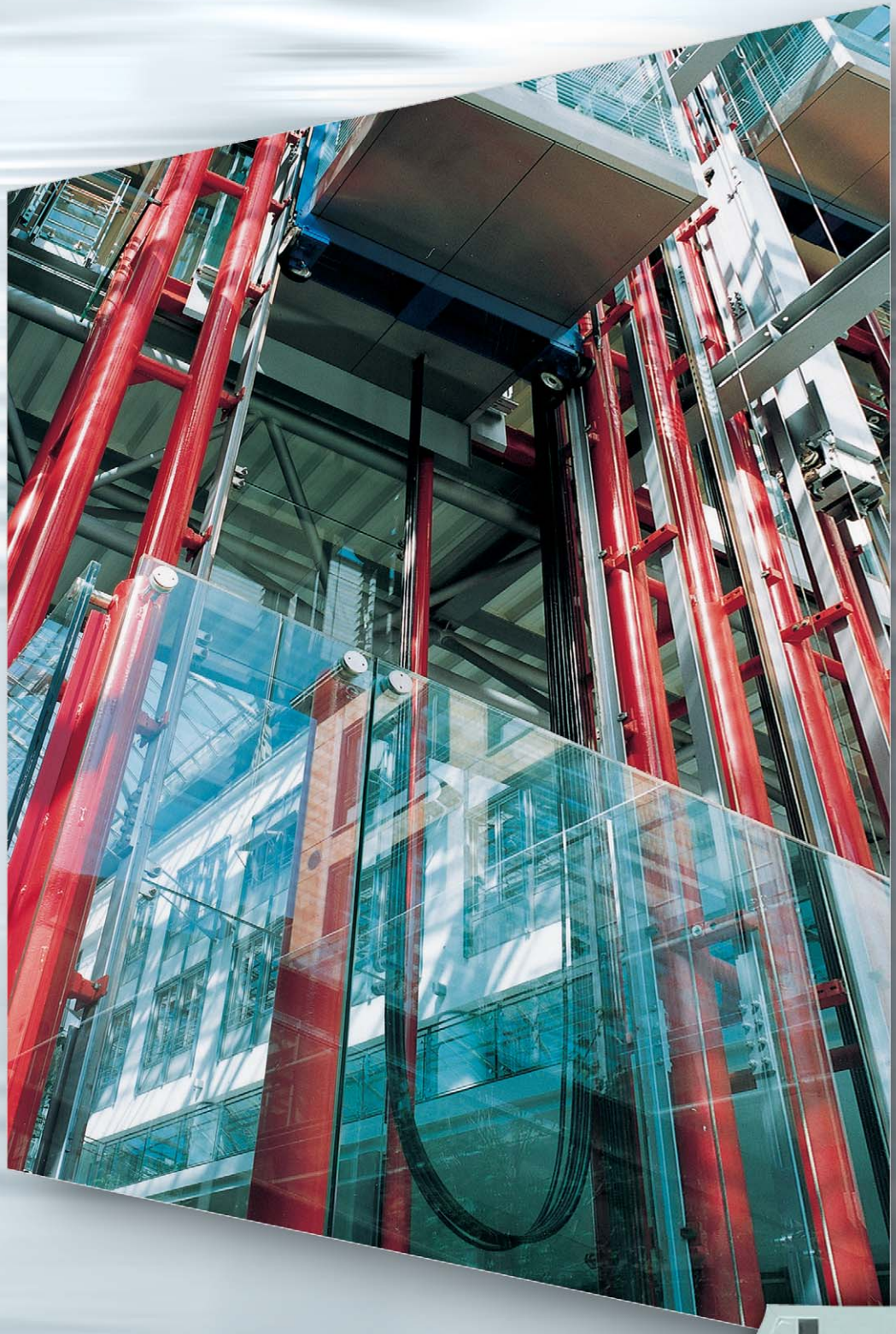

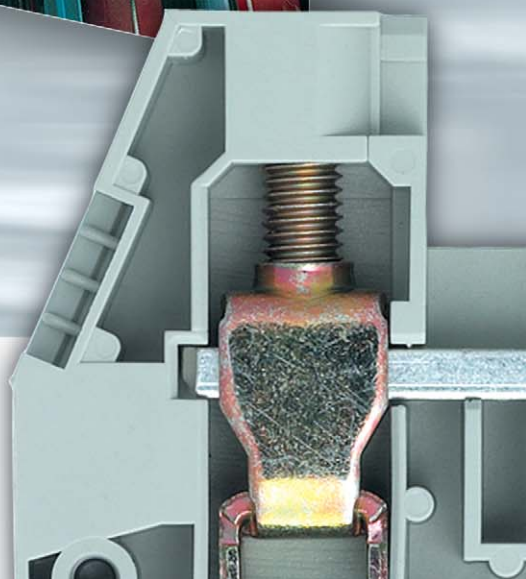

DIN Rail Terminal Blocks

Screw Connection, Type *WKN*

DIN rail terminal blocks with screw connection, type *WKN*

selos

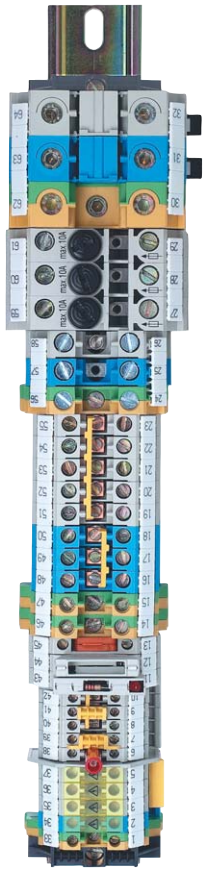

	2.5 mm² (12 AWG)	4 mm² (10 AWG)	6 mm² (8 AWG)	10 mm² (6 AWG)	16 mm² (4 AWG)
Feed-through blocks 2,5-150mm² 12 AWG – 350 MCM					
2,5-150mm² 12 AWG – 350 MCM					
Neutral disconnect blocks					
Ground blocks					

Standard DIN rail terminal blocks with rising

Disconnect lever fuse block

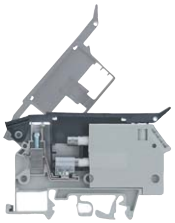

Fuseblock

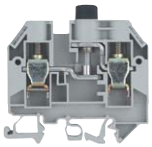

with indicator

Feed-through block

Fuse blocks

Disconnect block with diode plug

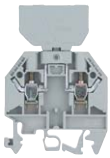

Disconnect-block with fuse holder

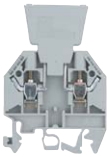

Knife edge disconnect block

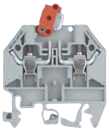

Invertible plug disconnect block

Feed-through block

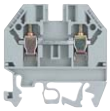

Disconnect blocks

35 mm² (2 AWG) | 70 mm² (2/0 AWG) | 150 mm² (350 MCM)

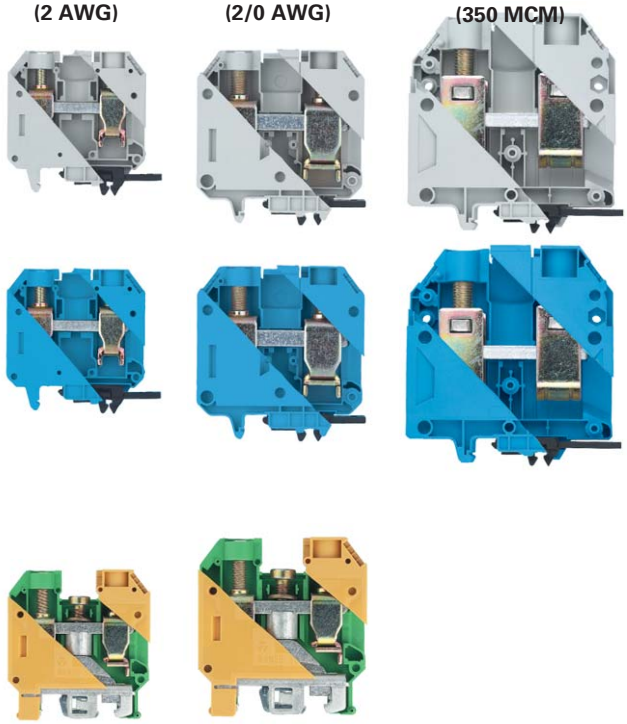

cage clamp

Connector clamps for busbars

	4 mm² (10 AWG)		4 mm² (10 AWG)
D1/2			
D2/2	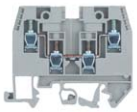	E	
D/E	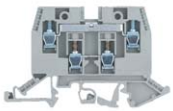	E/V B	
D2/2SL		E/SL	

Duo feed-through blocks

Multi-tier blocks

	2.5 mm² (12 AWG)	4 mm² (10 AWG)
Feed-through block with solder connection		
Feed-through block		
Groundblock		

Micro modular feed through blocks TS15

Three-tier feed-through block

Four-tier feed-through blocks

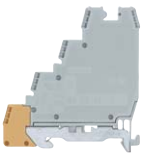

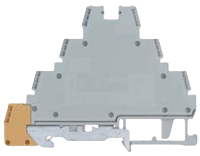

Initiator and actuator blocks

DIN rail terminal blocks with screw connection, type *WKN*

selos

WKN provides ...

❒ Rising cage clamp technology

❒ **Elastic clamping body**

❒ **One piece threaded collar**

Application advantages

→ Low contact resistance due to large surface area

→ High and stable contact force

→ **Vibration proof contact** – low maintenance

→ **Guaranteed functionality,** even after repeated tightening and loosening of the screws

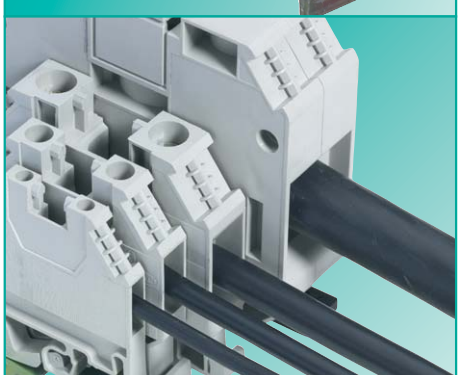

❒ **Rated cross section**
2.5 – 150 mm^2
12 AWG – 350 MCM

❒ **Connection range**
0.5 – 185 mm^2
24 AWG – 350 MCM

→ Solid, fine stranded and stranded wires can be connected to the WKN terminal blocks **without the use of ferrules**

→ If ferrules are used, the rated cross section does not have to be reduced

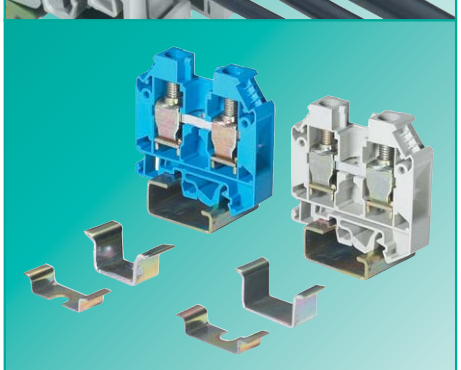

❒ **Universal foot** for
– TS35 accord. to DIN 60715
– TS32 accord. to DIN 60715

❒ Terminal is centered on the rail.

→ One terminal for all common mounting rails

→ Error free mounting foot provides clear identification of terminals mounted incorrectly

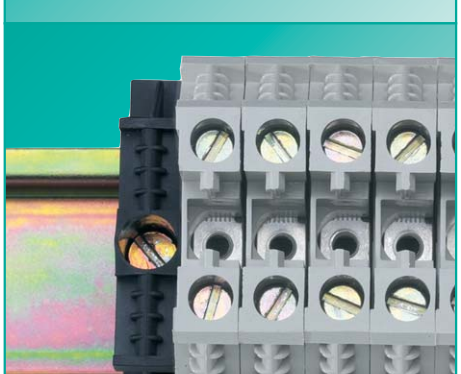

❒ Guided screwdriver access

→ **Mounting safety**

→ When pneumatic or electric screwdrivers are used, the screwdriver guide prevents the blade from slipping of the screw head.

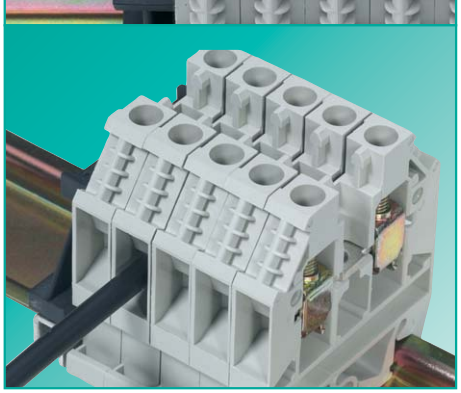

❒ 4-sided **Funneled wire entry**

→ **Safe and rapid installation of the wire**

→ Stranded and fine stranded wires can easily be inserted in the terminal block even without ferrules

→ Reduces installation time

❒ The terminal blocks are delivered the **clamping body** in the open position

selos

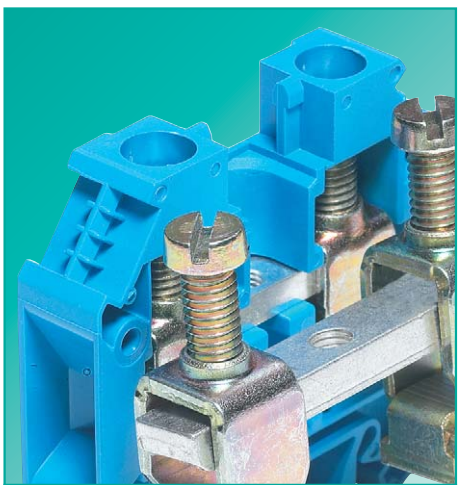

❒ **Captive hardware**

→ The clamping screws are securely **held** within the insulating housing.

→ Tapered plastic fins in the screw turret grip the screw head to ensure a secure connection

→ The screw design prevents the screw from comming out of the clamping body. Turning the screwdriver counter clockwise will cause the screw to spin in the idle position. This guarantees safe installation when using
pneumatic or electric screwdrivers.

Material

❒ Special alloys and surface treatment

❒ Low contact resistance

❒ High resistance to corrosion

Metal parts:

❒ Current carrying bar: tin pated; brass or copper

❒ Clamping body and clamping screws: steel, zinc-plated and dichromated

Insulating housing:

❒ Use of Polyamide 66/6 for its excellent chemical and mechanical properties (for more information see section ***facts*** & DATA)

❒ Material accord. to US standard UL 94-V0

Accessories:

❒ Stamped components: bright copper

❒ Test bolts and switchable connecting links: galvanized copper alloy

DQS certificates for all product families

❒ Quality standard as per DIN ISO 9001 in Development, Production, Assembly

❒ Continued control of the quality standard by means of regular internal and external quality audits

❒ Compatible with certificates of other countries:

– BSI Certificate, Great Britain
– SQS Certificate, Switzerland
– Aib-Vincotte Certificate, Belgium
– ÖQS Certificate, Austria

Various German and international approvals are available for feed-through terminal blocks. They are indicated in detail on the corresponding product pages. The feed-through blocks of series WK/WKN are approved for the increased-safety type of protection Eex "e" accord. to DIN EN 50019/VDE 0170/0171 part 6 where indicated. No type test is required for the Eex "i" type of protection.

ZERTIFIZIERTES DIN ISO 9001 DQS QUALITÄTSSICHERUNGSSYSTEM Reg.-Nr. 14 194-02 wieland

You can use our **wieplan** software to configure your own terminal block assemblies
(see page 10/11).

Note:

The information regarding cross sectional area and connection types pertains to unprepared wires without ferrules.

The voltage ratings apply to the terminals in their intended application. When different products are mounted adjacent to each other, the proper isolation distances must be adhered to. For this purpose, **Wieland** offers a large selection of appropriate accessories.

A detailed description of technical data, the standards' requirements, and the application conditions can be found in part ***facts*** & DATA.

DIN rail terminal blocks with screw connection, type *WKN*

selos

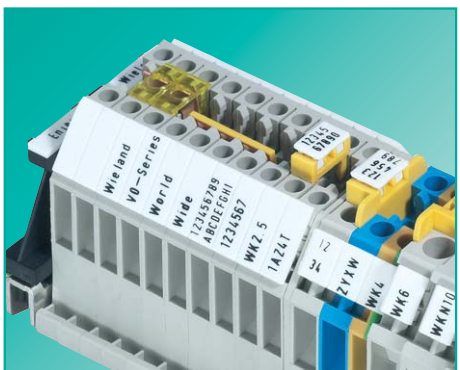

Marking accessories

- ❒ Single marking tags to match the terminal block spacing
- ❒ Snap-on marking strips (10 individual marking tags per strip) for rapid marking
- ❒ Tear-off marking strips marking up to 3-digits per terminal block
- ❒ Custom marking upon request

Cross connection (jumpering)

- ❒ Potential commoning can be achieved by means of cross connectors (jumpers) or jumper bars
- ❒ Insulated and uninsulated cross connectors are available in 2-12 pole configuration. Uninsulated versions are also available in larger pole configurations which can be cut to order.
- ❒ **Cross connectors** (jumpers) are mounted in the center thread of the current carrying bar
- ❒ They are preassembled for easy installation and the screws are secured against accidental loosening.
- ❒ In order to keep the rated voltage, end plates partitions or partition plates must be used
- ❒ Terminal blocks of different potentials must be mounted in staggering order

Jumper combs

- ❒ Number of poles: 2 to 12; with cut-to-order strips higher pole configurations can be achieved
- ❒ When using **jumper combs** you must insert the comb and the wire together in the clamping body
- ❒ AWG must be reduced to the next size when using jumper combs
- ❒ All insulated cross connectors IVB WK... and insulated jumper combs IVK WK... are protected against accidental contact accord. to VBG 4

Cover with warning symbol

- ❒ Cover with warning symbol to snap on to blocks which remain live when the main switch is disconnected (VDE 0113)
- ❒ The cover can only be removed with a screwdriver

Partition plates

- ❒ Full rated voltage is maintained when using partition plate with cross connectors (jumpers).
- ❒ Can be installed post assembly
- ❒ The partition plates can only be removed with a screwdriver
- ❒ The cross connector covers protect the user against accidental contact
- ❒ Various marking options are available with the standard Wieland marking system

selos

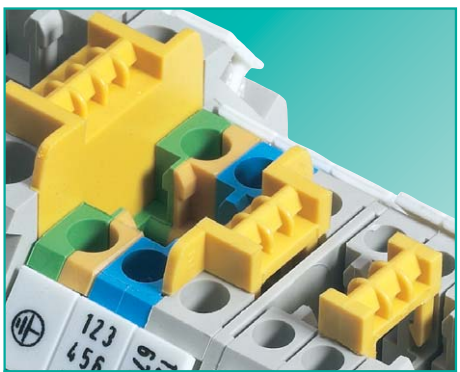

Protection against accidental contact for cross connectors

In addition to the partition plates you can use covers to protect the uninsulated cross connectors against accidental contact. They snap on tight and can be marked with the Wieland marking accessories.

Switchable connecting links

- ❒ Shorts two terminals together and provides a separable connection
- ❒ Mounted to the center thread of the current carrying bar on the terminal blocks

Test sockets

Test plugs

Shorting plug

- ❒ Stud bolts for test plugs and cross connector plugs are mounted on the center thread of the current carrying bar on the terminal blocks
- ❒ Test plugs with locking levers can be snapped together in any pole configuration

Partition plates

End plates

- ❒ Partition plates optically separate different terminal block groups, and are required to keep the air and creepage distances when cross connectors of different potentials are mounted adjacent to each other
- ❒ For safety reasons the partitions are constructed in a way that they can only be removed together with the neighboring terminal block

You can use our **wieplan** software to design your own terminal block assemblies
(see page 10/11).

DIN rail terminal blocks with screw connection, type *WKN*

selos

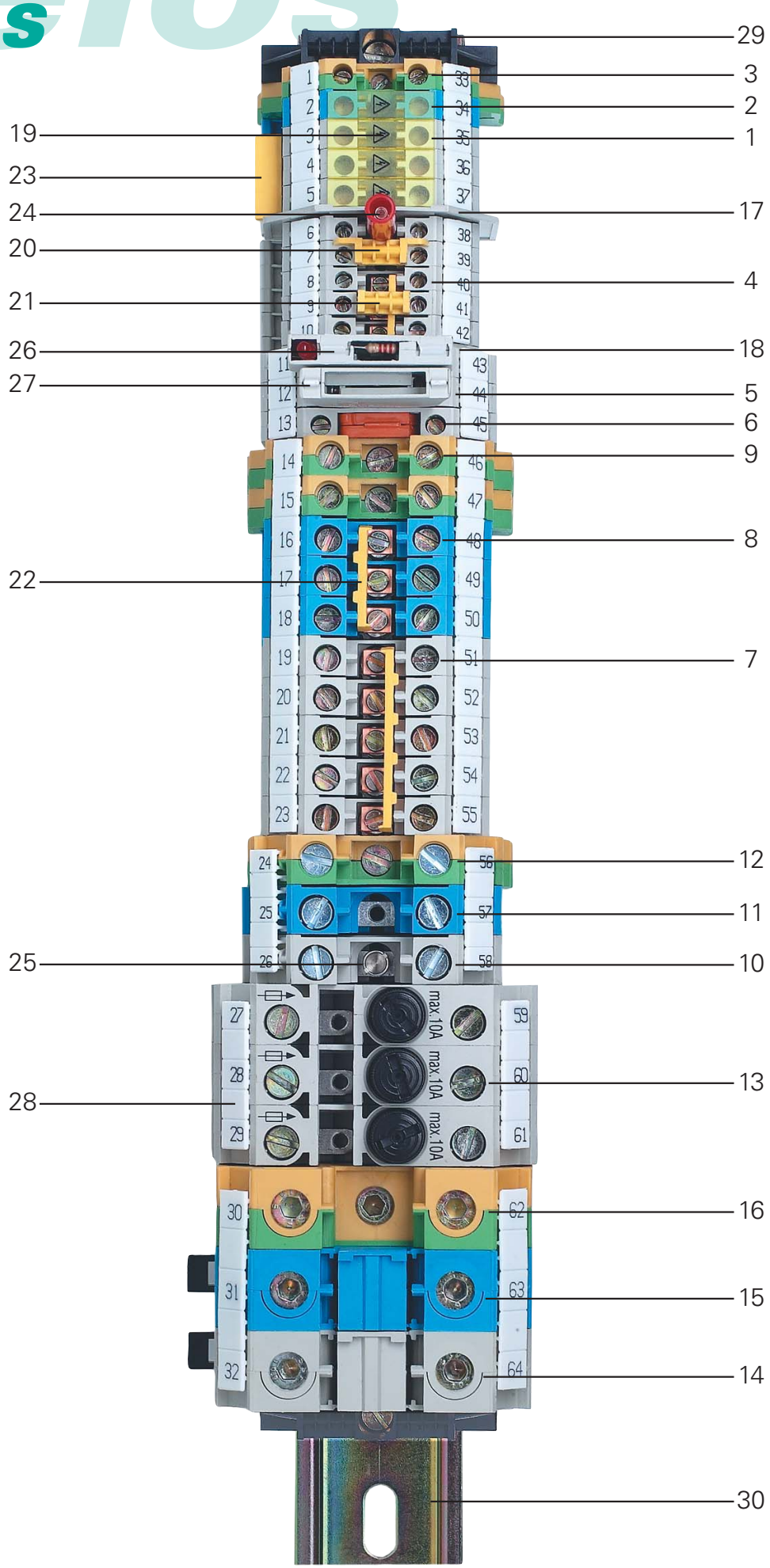

selos

Item	Description	Type	Part number
1	Feed through block	WK 4/U	57.504.0055.0
2	Feed-through block, blue	WK 4/U BLAU	57.504.0055.6
3	Ground block	WK 4 SL/U	57.504.9055.0
4	Feed through block	WK 2,5/U	57.503.0055.0
5	Disconnect block	WK 4 TKG/U	57.504.4055.0
6	Knife edge disconnect block	WK 4 TKM/U	57.504.2055.0
7	Feed through block	WK 6/U	57.506.0055.0
8	Feed-through block, blue	WK 6/U BLAU	57.506.0055.6
9	Ground block	WK 6 SL/U	57.506.9055.0
10	Feed through block	WKN 10/U	57.510.0155.0
11	Feed-through block, blue	WKN 10/U BLAU	57.510.0155.6
12	Ground block	WKN 10 SL/U	57.510.9055.0
13	Fuse block	WK 10 SI/U 5x20	57.910.5055.0
14	Feed through block	WKN 35/U	57.535.0155.0
15	Feed-through block, blue	WKN 35/U BLAU	57.535.0155.6
16	Ground block	WKN 35/U	57.535.9055.0
17	Partition	TW 2,5-4	07.311.1155.0
18	End plate	AP 2,5-4	07.311.0155.0
19	Cover strip with warning symbol	AD VB 6/4 GELB	04.343.4856.8
20	over 4 blocks	TS 2,5 GELB	07.311.2053.8
	Partition plate, yellow		
21	Single cover for cross conn. with mark. facil.	AD VB 2,5 GELB	04.326.2053.8
22	Cross connector with screws, insulated	IVB WK 6-3	Z7.282.2327.0
23	Jumper comb, insulated	IVB 0,5 WK 4-3	Z7.255.0327.0
24	Test plug	ST 2/2,3	Z5.553.2921.0
25	Stud bolt for test plug	9011B	05.508.3221.0
26	Fuse holder with indicator	SIST LED	Z1.299.4155.0
27	Diode plug, without contacts	DIST	Z1.299.3155.0
28	Marking strip	9705 A/8/10 B	04.842.0153.0
29	End clamp with U-foot	WE 1/U	Z5.523.5753.0
30	Mounting rail	35 x 27 x 7,5 slotted	98.300.0000.0

Feed-through blocks
type *WK/ WKN*

selos

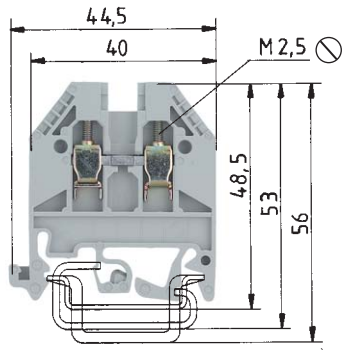

WK 2,5/U

		fine stranded	solid	V	A
EN 60 947-7-1/DIN VDE 0611T1		0.5 – 2.5 mm²	0.5 – 4 mm²	800 V/8 kV/3	24
UL-ratings	field/factory wiring	No. 22-12 AWG		600 V	20/30
CSA ratings		No. 24-12 AWG		600 V	25
Width	Wire strip length	5 mm			9 mm
Approvals		SEV-EEX, LR LCIE, * ** BKI-EEx			

Mounting instructions for EEx e applications

– If feed-through blocks are mounted directly adjacent to feed-through blocks of a different size, or directly adjacent to ground blocks, the open side of a group of the same type of blocks has to be covered by an end plate or partition.

– If neighboring terminal blocks are jumpered by a cross connector, the required isolation distances have to be maintained by inserting either a snap-in partition plate (without increasing pitch), an end plate, or a partition between the different block groups, in front of or behind the cross-connected terminal block group.

		Type	Part no.	Std. pack
Feed through block	Color: gray	WK 2,5/U	57.503.0055.0	100
Feed-through block EEx i	Color: blue	WK 2,5/U BLAU	57.503.0055.6	100
Feed-through block EEx e[1)]	Color: gray	WK 2,5/U [2)]	57.503.0055.0	100
Accessories				
1. Mounting rail TS 35, DIN rail 7.5mm high	L = 2 m	35 x 27 x 7,5 EN 60715	98.300.0000.0	1
Mounting rail TS 35, DIN rail, 15mm high	L = 2 m	35 x 24 x 15 EN 60715	98.360.0000.0	1
Mounting rail TS 32, G rail	L = 2 m	9006 EN 60715 G-32	98.190.0000.0	1
2. End clamp with U-foot	10 mm wide	WE 1/U	Z5.523.5753.0	100
End clamp TS 35, with screw	8 mm wide	9708/2 S35	Z5.522.8553.0	100
End clamp TS 32, with screw	7.5 mm wide	9708	Z5.522.7053.0	100
3. End plate, 1.5 mm thick	Color: gray	AP 2,5 - 4	07.311.0155.0	10
	Color: blue	AP 2,5 - 4 BLAU	07.311.0155.6	10
End plate, 2 mm thick	Color: gray			
	Color: blue			
4. Partition, 1.5 mm thick	Color: gray	TW 2,5 - 4	07.311.1155.0	10
	Color: blue	TW 2,5 - 4 BLAU	07.311.1155.6	10
Partition, 2 mm thick	Color: gray			
	Color: blue			
Partition, 3 mm thick	Color: gray			
	Color: blue			
5. Cross connector with screws, E-Cu				
insulated (jumper)	2pole	IVB WK 2,5 - 2	Z7.280.2227.0	10
	3pole	IVB WK 2,5 - 3	Z7.280.2327.0	10
	to 12pole	IVB WK 2,5 - 12	Z7.280.3227.0	10
6. Single cover f. cross conn. with mark.facility		AD VB 2,5 GELB	04.326.2053.8	10
7. Snap-In partition		TS 2,5 GELB	07.311.2053.8	10
8. Cover strip f. cross conn. over 10 blocks with test hole		AD VB 5/10 P GELB	04.342.3556.8	10
Cover strip with warning symbol over 4 blocks		AD VB 5/4 GELB	04.343.4756.8	10
For more accessories see pages 160-177				
For marking systems see pages 178-179 and 200-202		* CL I, ZN1, AExe II / **CL I, ZN1, Exe II pending		

[1)] EEx e terminal blocks are subject to certification. The relevant indications in the certificate apply (e.g. 660V)

[2)] Part certificates for EEx e approval: EEx e I/II L CIE 89.B0013 U; EEx e II ASEV 91.1 B11638U

UL wire connection variants

[3)] or 2x no. 14 sol/str AWG
or 2x no. 16 sol/str AWG
or 2x no. 18 sol/str AWG
or 3x no. 20 sol/str AWG or 3x no. 22 sol/str AWG

[4)] or 2x no. 12 sol/str AWG
or 2x no. 16 sol/str AWG
or 3x no. 18 sol/str AWG or 3x no. 22 sol/str AWG

[5)] or 2x no. 12 sol/str AWG
or 2x no. 14 sol/str AWG
or 3x no. 16 sol/str AWG

selos

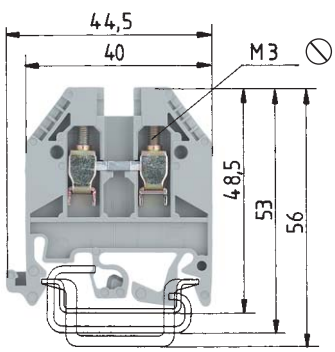

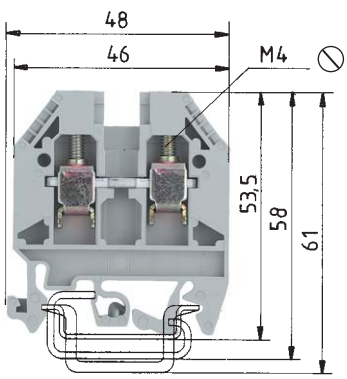

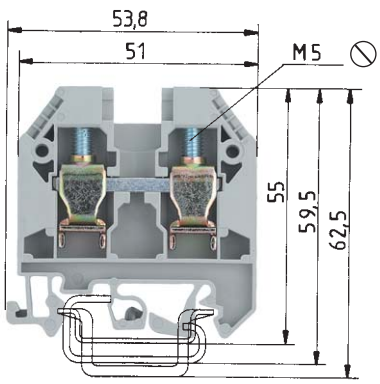

WK 4/U

fine stranded	solid	V	A
0.5 – 4 mm²	0.5 – 6 mm²	800 V/8 kV/3	32
No. 22-10 AWG [3]		600 V	30/35
No. 20-10 AWG		600 V	40
6 mm			9 mm

SEV-EEX LR LCIE * ** BKI-EEx

Type	Part no.	Std. pack
WK 4/U	57.504.0055.0	100
WK 4/U BLAU	57.504.0055.6	100
WK 4/U [2]	57.504.0055.0	100
35 x 27 x 7,5 EN 60715	98.300.0000.0	1
35 x 24 x 15 EN 60715	98.360.0000.0	1
9006 EN 60715 G-32	98.190.0000.0	1
WE 1/U	Z5.523.5753.0	100
9708/2 S35	Z5.522.8553.0	100
9708	Z5.522.7053.0	100
AP 2,5 - 4	07.311.0155.0	10
AP 2,5 - 4 BLAU	07.311.0155.6	10
TW 2,5 - 4	07.311.1155.0	10
TW 2,5 - 4 BLAU	07.311.1155.6	10
IVB WK 4 - 2	Z7.281.1227.0	10
IVB WK 4 - 3	Z7.281.1327.0	10
IVB WK 4 - 12	Z7.281.2227.0	10
AD VB 4 GELB	04.326.2153.8	10
TS 4 GELB	07.311.2153.8	10
AD VB 6/10 P GELB	04.342.3656.8	10
AD VB 6/4 GELB	04.343.4856.8	10

* CL I, ZN1, AExe II / **CL I, ZN1, Exe II pending

WK 6/U

fine stranded	solid	V	A
0.5 – 6 mm²	2.5 – 10 mm²	800 V/8 kV/3	41
No. 22-8 AWG [4]		600 V	50/50
No. 20-8 AWG		600 V	45
8 mm			11 mm

SEV-EEX LR LCIE * ** BKI-EEx

Type	Part no.	Std. pack
WK 6/U	57.506.0055.0	100
WK 6/U BLAU	57.506.0055.6	100
WK 6/U [2]	57.506.0055.0	100
35 x 27 x 7,5 EN 60715	98.300.0000.0	1
35 x 24 x 15 EN 60715	98.360.0000.0	1
9006 EN 60715 G-32	98.190.0000.0	1
WE 1/U	Z5.523.5753.0	100
9708/2 S35	Z5.522.8553.0	100
9708	Z5.522.7053.0	100
AP 6	07.311.0255.0	10
AP 6 BLAU	07.311.0255.6	10
TW 6	07.311.1255.0	10
TW 6 BLAU	07.311.1255.6	10
IVB WK 6 - 2	Z7.282.2227.0	10
IVB WK 6 - 3	Z7.282.2327.0	10
IVB WK 6 - 12	Z7.282.3227.0	10
AD VB 6 GELB	04.326.2253.8	10
TS 6 GELB	07.311.2253.8	10
AD VB 8/10 P GELB	04.342.3856.8	10
AD VB 8/4 GELB	04.343.4956.8	10

* CL I, ZN1, AExe II / **CL I, ZN1, Exe II pending

WKN 10/U

fine stranded	solid/stranded	V	A
2.5 – 10 mm²	1.5 – 16 mm²	800 V/8 kV/3	57
No. 16-6 AWG [5]		600 V	65/65
No. 16-6 AWG		600 V	70
10 mm			13 mm

SEV-EEX LR * ** BKI-EEx

Type	Part no.	Std. pack
WKN 10/U	57.510.0155.0	50
WKN 10/U BLAU	57.510.0155.6	50
WKN 10/U	57.510.0155.0	50
35 x 27 x 7,5 EN 60715	98.300.0000.0	1
35 x 24 x 15 EN 60715	98.360.0000.0	1
9006 EN 60715 G-32	98.190.0000.0	1
WE 1/U	Z5.523.5753.0	100
9708/2 S35	Z5.522.8553.0	100
9708	Z5.522.7053.0	100
APN 10	07.311.6655.0	10
APN 10 BLAU	07.311.6655.6	10
TWN 10	07.311.7655.0	10
TWN 10 BLAU	07.311.7655.6	10
IVB WKN 10 - 2	Z7.283.2227.0	10
IVB WKN 10 - 3	Z7.283.2327.0	10
IVB WKN 10 - 12	Z7.283.3227.0	10
AD VB 10 GELB	04.326.2353.8	10
TS 10 GELB	07.311.2353.8	10
AD VB 10/10 P GELB	04.342.4056.8	10
AD VB 10/4 GELB	04.343.5056.8	10

* CL I, ZN1, AExe II / **CL I, ZN1, Exe II pending

Feed through blocks type *WKN*

selos

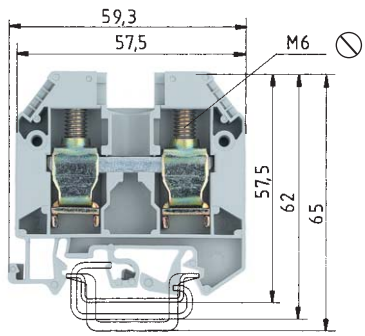

WKN 16/U

		fine stranded	solid/stranded	V	A
EN 60 947-7-1/DIN VDE 0611 T1		4 – 16 mm²	1.5 – 25 mm²	800 V/8 kV/3	76
UL-ratings	field/factory wiring	No. 12-4 AWG		600 V	85/90
CSA ratings		No. 14-4 AWG		600 V	95
Width	Wire strip length	12 mm			15 mm
Approvals		SEV-EEX * ** BKI-EEx			

Mounting instructions for EEx e applications

– If feed-through blocks are mounted directly adjacent to feed-through blocks of a different size, or directly adjacent to ground blocks, the open side of a group of the same type of blocks has to be covered by an end plate or partition.

– If neighboring terminal blocks are jumpered by a cross connector, the required isolation distances have to be maintained by inserting either a snap-in partition plate (without increased pitch), an end plate, or a partition between the different block groups, in front of or behind the cross-connected terminal block group.

		Type	Part no.	Std. pack
Feed through block	Color: gray	WKN 16/U	57.516.0155.0	50
Feed-through block EEx i	Color: blue	WKN 16/U BLAU	57.516.0155.6	50
Feed-through block EEx e*[1]	Color: gray	WKN 16/U [2]	57.516.0155.0	50
Accessories				
1. Mounting rail TS 35, DIN rail 7.5mm high	L = 2 m	35 x 27 x 7,5 EN 60715	98.300.0000.0	1
Mounting rail TS 35, DIN rail, 15mm high	L = 2 m	35 x 24 x 15 EN 60715	98.360.0000.0	1
Mounting rail TS 32, G rail	L = 2 m	9006 EN 60715 G-32	98.190.0000.0	1
2. End clamp with U-foot	10 mm wide	WE 1/U	Z5.523.5753.0	100
End clamp TS 35, with screw	8 mm wide	9708/2 S 35	Z5.522.8553.0	100
End clamp TS 32, with screw	7.5 mm wide	9708	Z5.522.7053.0	100
3. End plate, 1.5 mm thick	Color: gray			
	Color: blue			
End plate, 2 mm thick	Color: gray	APN 16	07.311.6755.0	10
	Color: blue	APN 16 BLAU	07.311.6755.6	10
Partition, 1.5 mm thick	Color: gray			
	Color: blue			
Partition, 2 mm thick	Color: gray	TWN 16	07.311.7755.0	10
	Color: blue	TWN 16 BLAU	07.311.7755.6	10
Partition, 3 mm thick	Color: gray			
	Color: blue			
5. Cross connector with screws, E-Cu				
insulated (jumper)	2pole	IVB WKN 16 - 2	Z7.284.2227.0	10
	3pole	IVB WKN 16 - 3	Z7.284.2327.0	10
	to 12pole	IVB WKN 16 - 12	Z7.284.3227.0	10
6. Single cover f. cross conn. with mark.facility				
7. Partition plate with marking facility		TSN 16 GELB	07.311.8453.8	10
Partition plate with cover		TSN AD 16 GELB	07.311.8553.8	10
8. Cover strip for cross conn. over 10 blocks				
Cover strip with warn. symb. over 4 blocks		AD VB 12/4 GELB	04.343.5156.8	10
For more accessories see pages 160-177				
For marking systems see pages 178-179 and 200-202		* CL I, ZN1, AExe II / **CL I, ZN1, Exe II pending		

*) with CCA certificate
1) EEx e terminal blocks are subject to certification. The relevant indications in the certificate apply (e.g. 660V)
2) Part certificates for EEx e approval: EEx e II ASEV 91.1 B11638U

selos

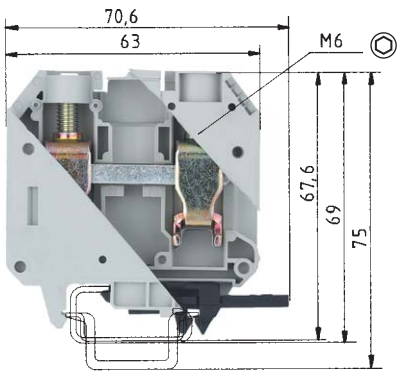

enclosed design

WKN 35/U

fine stranded	stranded	V	A
10 – 35 mm²	10 – 50 mm²	800 V/8 kV/3	125
No. 10-2 AWG		600 V	95/95
No. 10-2 AWG		600 V	110
16 mm			18 mm

EPM SEV-EEX LR *
** BKI-EEx

Type	Part no.	Std. pack
WKN 35/U	57.535.0155.0	20
WKN 35/U BLAU	57.535.0155.6	20
WKN 35/U [2]	57.535.0155.0	20
35 x 27 x 7,5 EN 60715	98.300.0000.0	1
35 x 24 x 15 EN 60715	98.360.0000.0	1
9006 EN 60715 G-32	98.190.0000.0	1
WE 2/U	Z5.523.5653.0	100
9708/2 S 35	Z5.522.8553.0	100
9708	Z5.522.7053.0	100
TWN 35	07.311.7855.0	10
TWN 35 BLAU	07.311.7855.6	10
IVB WKN 35 - 2	Z7.285.2227.0	5
IVB WKN 35 - 3	Z7.285.2327.0	5
IVB WKN 35 - 12	Z7.285.3227.0	5
AD VB 35 GELB	04.326.2553.8	10
AD VB 16/4 GELB	04.343.5256.8	10

* CL I, ZN1, AExe II / **CL I, ZN1, Exe II pending

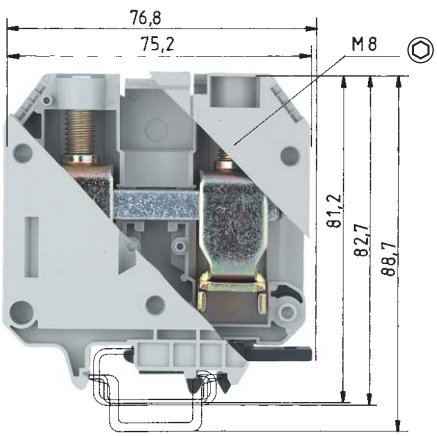

enclosed design

WKN 70/U

fine stranded	stranded	V	A
10 – 70 mm²	16 – 95 mm²	800 V/8 kV/3	192
No. 6-2/0 AWG		600 V	175/175
No. 6-2/0 AWG		600 V	170
24 mm			24 mm

SEV-EEX LR [1] [2]
BKI-EEx

Type	Part no.	Std. pack
WKN 70/U	57.570.0155.0	20
WKN 70/U BLAU	57.570.0155.6	20
WKN 70/U [2]	57.570.0155.0	20
35 x 27 x 7,5 EN 60715	98.300.0000.0	1
35 x 24 x 15 EN 60715	98.360.0000.0	1
9006 EN 60715 G-32	98.190.0000.0	1
WE 2/U	Z5.523.5653.0	100
9708/2 S 35	Z5.522.8553.0	100
9708	Z5.522.7053.0	100
TWN 70	07.311.7955.0	10
TWN 70 BLAU	07.311.7955.6	10
jumper bars unisulated see page 165		
AD VB 70 GELB	04.326.2653.8	10
AD VB 24/4 GELB	04.343.5356.8	10

[1] [2] CL I, ZN1, AExe II, Exe II pending

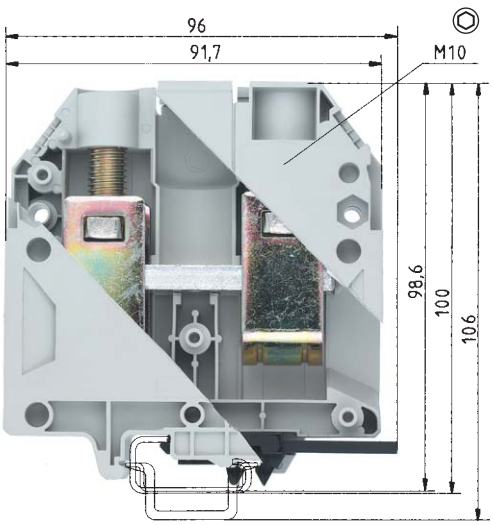

enclosed design

WKN 150/U

fine stranded	stranded	V	A
35 – 150 mm²	35 – 185 mm²	1000 V/8 kV/3	309
No. 2/0 AWG - 350 kcmil		600 V	335/335
No. 2/0 AWG - 350 MCM		1000 V	365
28 mm			30 mm

SEV-EEX [1] [2] BKI-EEx

Type	Part no.	Std. pack
WKN 150/U	57.597.0155.0	10
WKN 150/U BLAU	57.597.0155.6	10
WKN 150/U [2]	57.597.0155.0	10
35 x 27 x 7,5 EN 60715	98.300.0000.0	1
35 x 24 x 15 EN 60715	98.360.0000.0	1
9006 EN 60715 G-32	98.190.0000.0	1
WE 2/U	Z5.523.5653.0	100
9708/2 S 35	Z5.522.8553.0	100
9708	Z5.522.7053.0	100
jumper bars unisulated see page 165		
AD VB 28/4 GELB	04.343.5456.8	10

[1] [2] CL I, ZN1, AExe II, Exe II pending

Neutral disconnect blocks for installation with U-foot, type *WKN*

selos

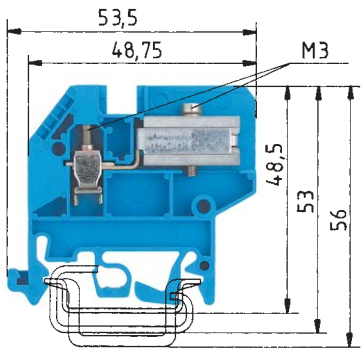

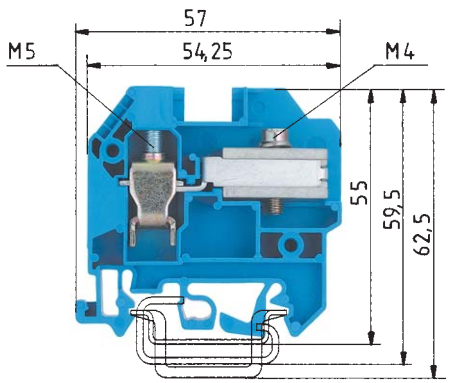

Current carrying capability:			
fine stranded:	4 mm²	25 A	
solid:	6 mm²	30 A	

Current carrying capability:			
fine stranded:	10 mm²	45 A	
stranded:	16 mm²	50 A	

WKN 4 ETK/U

fine stranded	solid	V	A
0.5 – 4 mm²	0.5 – 6 mm²	400 V/6 kV/3*)	
CSA No. 20-10 AWG		600V	25
6 mm			9 mm

WKN 10 ETK/U

fine stranded	solid/stranded	V	A
1 – 10 mm²	1 – 16 mm²	400 V/6 kV/3*)	
CSA No.16-6 AWG		600V	45
10 mm			13 mm

EN 60 947-7-1/DIN VDE 0611 T1	
UL-ratings/CSA ratings	field/factory wiring
Width	Wire strip length
Approvals	

		Type	Part no.	Std. pack	Type	Part no.	Std. pack
Neutral disconnect block	Color: blue	WKN 4 ETK/U	57.504.8155.0	100	WKN 10 ETK/U	57.510.8155.0	50
Accessories							
1. Mounting rail TS 35, DIN rail, 7.5 mm high	L = 2 m	35 x 27 x 7,5 EN 60715	98.300.0000.0	1	35 x 27 x 7,5 EN 60715	98.300.0000.0	1
Mounting rail TS 35, DIN rail 15 mm high	L = 2 m	35 x 24 x 15 EN 60715	98.360.0000.0	1	35 x 24 x 15 EN 60715	98.360.0000.0	1
Mounting rail TS 32, G rail	L = 2 m	9006 EN 60715 G-32	98.190.0000.0	1	9006 EN 60715 G-32	98.190.0000.0	1
2. End clamp with U-foot	10 mm wide	WE 1/U	Z5.523.5753.0	100	WE 1/U	Z5.523.5753.0	100
End clamp TS 35, with screw	8 mm wide	9708/2 S35	Z5.522.8553.0	100	9708/2 S35	Z5.522.8553.0	100
End clamp TS 32, with screw	7.5 mm wide	9708	Z5.522.7053.0	100	9708	Z5.522.7053.0	100
3. End plate 1,5 mm thick	Color: gray						
	Color: blue	APN 4 ETK	07.312.1155.0	10	APN 10 ETK	07.312.0955.0	10
End plate 2 mm thick	Color: gray						
	Color: blue						
4. Partition, 1.5 mm thick	Color: gray						
	Color: blue						
Partition, 2 mm thick	Color: gray						
	Color: blue						
Partition, 3 mm thick	Color: gray						
	Color: blue						
5. Busbar support 10 x 3	4 mm wide	WKI SH/U	01.108.3255.0	10	WKI SH/U	01.108.3255.0	10
6. Busbar E-Cu, 10 x 3	L = 1 m	9813 M	98.290.0000.0	1	9813 M	98.290.0000.0	1
Busbar, tin-plated, 10 x 3	L = 1 m	9813 M SN	98.290.1000.0	1	9813 M SN	98.290.1000.0	1
7. Connector clamps for busbar	Farbe: blue						
Connector clamps for busbar	Color: unplated						
8. Single cover f. cross conn. with marking facility		AD VB 4 GELB	04.326.2153.8	10	AD VB 10 GELB	04.326.2353.8	10
9. Partition plate with marking facility							
10. Cover strip for cross conn. over 10 blocks							
Cover strip with warn. symb. over 4 blocks							
For more accessories see pages 160-177							
For marking systems see pages 178-179 and 200-202							
*) For use in grounded networks 690/400 V							

Connector clamps for Cu busbar (10 x 3 mm), type *WAK*

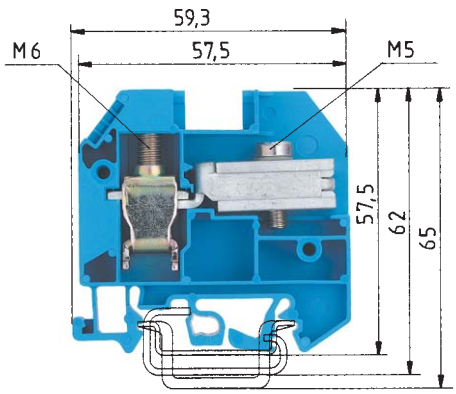

Current carrying capability:

fine stranded:	16 mm²	62 A
stranded:	25 mm²	67 A

WKN 16 ETK/U

fine stranded	solid/stranded	V	A
1 – 16 mm²	1 – 25 mm²	400 V/6 kV/3*)	
CSA No. 14-4 AWG		600V	65
12 mm			15 mm

WAK 16/2

EN 60 998-2-1 CCA/CH

fine stranded	stranded	V	A
1,5 – 16 mm²	10 – 16 mm²		76
8,4 mm			16 mm

WAK 35/2

EN 60 998-2-1 CCA/CH

fine stranded	stranded	V	A
16 – 35 mm²	16 – 35 mm²		125
17 mm			14 mm

Type	Part no.	Std. pack	Type	Part no.	Std. pack	Type	Part no.	Std. pack
WKN 16 ETK/U	57.516.8155.0	50						
35 x 27 x 7,5 EN 60715	98.300.0000.0	1						
35 x 24 x 15 EN 60715	98.360.0000.0	1						
9006 EN 60715 G-32	98.190.0000.0	1						
WE 1/U	Z5.523.5753.0	100						
9708/2 S35	Z5.522.8553.0	100						
9708	Z5.522.7053.0	100						
APN 16 ETK	07.312.0855.0	10						
WKI SH/U	01.108.3255.0	10						
9813 M	98.290.0000.0	1						
9813 M SN	98.290.1000.0	1						
			WAK 16/2 BLAU	30.494.3021.6	100	WAK 35/2 BLAU	30.494.4021.6	
						WAK 35/2	30.494.4121.0	50
AD VB 16 GELB	04.326.2453.8	10						

Ground blocks
type *WK/WKN ... SL/U*

selos

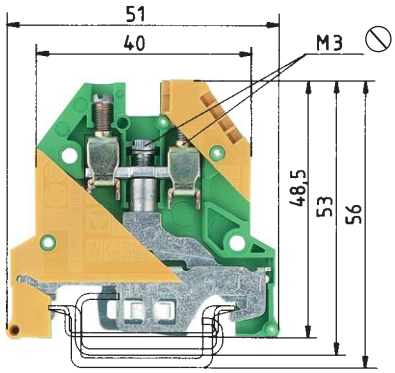

enclosed design

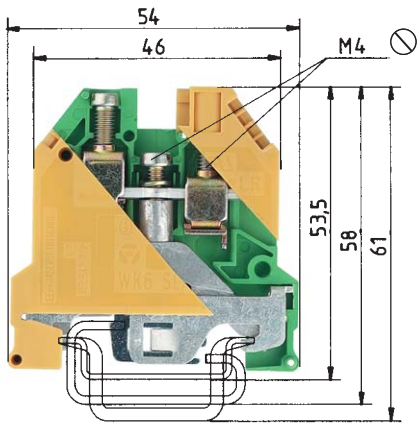

enclosed design

	WK 4 SL/U	WK 6 SL/U
EN 60 947-7-2/DIN VDE 0611 T3	fine stranded solid V A	fine stranded solid V A
	0.5 – 4 mm² 0.5 – 6 mm² 800 V/8 kV/3*) **)	0.5 – 6 mm² 0.5 – 10 mm² 800 V/8 kV/3*) **)
UL-ratings field/factory wiring	No. 22-10 AWG	No. 22-8 AWG
CSA ratings	No. 20-10 AWG	No. 20-8 AWG
Width Wire strip length	6 mm 9 mm	8 mm 12 mm
Approvals	EPM SEV-EEX LR * ** BKI-EEx	EPM SEV-EEX LR * ** BKI-EEx

	Type	Part no.	Std. pack	Type	Part no.	Std. pack
Ground block with U-foot Color: yellow/green	WK 4 SL/U	57.504.9055.0	100	WK 6 SL/U	57.506.9055.0	100
EEx e ground block with U-foot[1]	WK 4 SL/U[2]	57.504.9055.0	100	WK 6 SL/U[2]	57.506.9055.0	100
Accessories						
1. Mounting rail TS 35, DIN rail, 7.5 mm high L = 2 m	35 x 27 x 7,5 EN 60715	98.300.0000.0	1	35 x 27 x 7,5 EN 60715	98.300.0000.0	1
Mounting rail TS 35, DIN rail, 15mm high L = 2 m	35 x 24 x 15 EN 60715	98.360.0000.0	1	35 x 24 x 15 EN 60715	98.360.0000.0	1
Mounting rail TS 32, G rail L = 2 m	9006 EN 60715 G-32	98.190.0000.0	1	9006 EN 60715 G-32	98.190.0000.0	1
2. End clamp with U-foot 10 mm wide						
End clamp TS 35, with screw 8 mm wide						
End clamp TS 32, with screw 7.5 mm wide						
3. End plate, 1.5 mm thick Color: gray						
Color: blue						
End plate, 2 mm thick Color: gray						
Color: blue						
4. Partition, 1.5 mm thick Color: gray						
Color: blue						
Partition, 2 mm thick Color: gray						
Color: blue						
Partition, 3 mm thick Color: gray						
Color: blue						
5. Cross connector with screws, E-Cu						
insulated (jumper) 2pole						
3pole						
to 12pole						
6. Single cover f. cross conn. with marking facility						
7. Snap-in partition plate with marking facility						
8. Cover strip for cross conn. over 10 blocks						
Cover strip with warn. symb. over 4 blocks						
For more accessories see pages 160-177						
For marking systems see pages 178-179 and 200-202	* CL I, ZN1, AExe II / **CL I, ZN1, Exe II pending					
				* CL I, ZN1, AExe II / **CL I, ZN1, Exe II pending		

*) Ratings to adjacent feed-through blocks of the same series and size
) For the current carrying capability of the mounting rail see section ***facts* & DATA
1) EEx e terminal blocks are subject to certification. The relevant indications in the certificate apply (e.g. 660V)
2) Part certificates for EEx e approval: EEx e II ASEV 91.1 B11638U

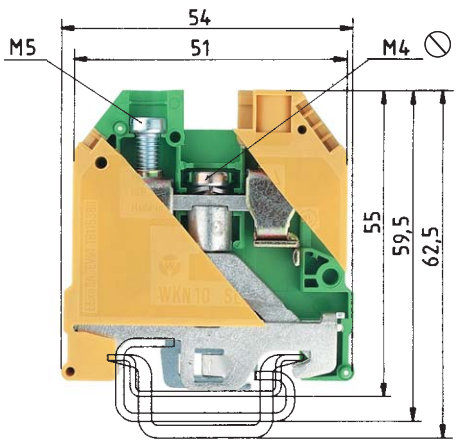

enclosed design

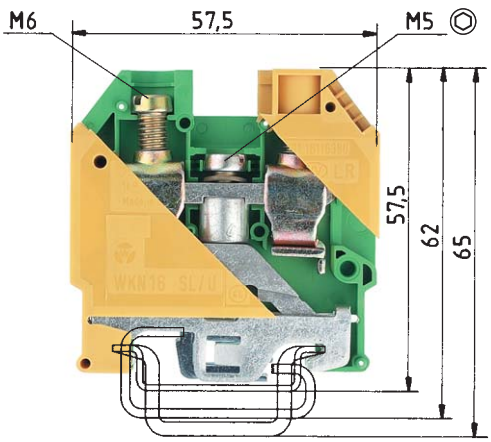

enclosed design

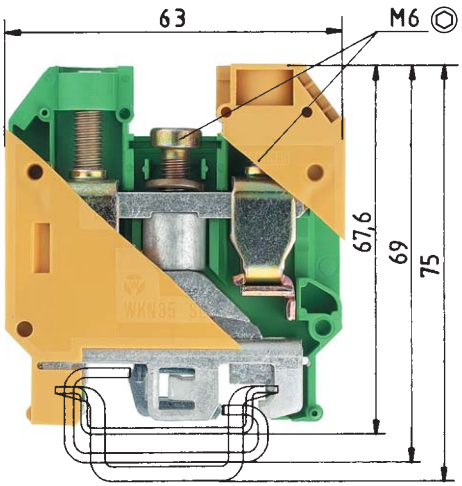

enclosed design

WKN 10 SL/U

fine stranded	solid/stranded	V	A
2.5 – 10 mm²	1.5 – 16 mm²	800 V/8 kV/3*)	**)
No. 16-6 AWG			
No. 16-6 AWG			
10 mm			13 mm

GL EPM SEV-EEX SEV N NV FI KEMA S LR UL * CSA **
BKI-EEx

Type	Part no.	Std. pack
WKN 10 SL/U	57.510.9055.0	50
WKN 10 SL/U[2)]	57.510.9055.0	50
35 x 27 x 7,5 EN 60715	98.300.0000.0	1
35 x 24 x 15 EN 60715	98.360.0000.0	1
9006 EN 60715 G-32	98.190.0000.0	1

* CL I, ZN1, AExe II / **CL I, ZN1, Exe II pending

WKN 16 SL/U

fine stranded	solid/stranded	V	A
4 – 16 mm²	1.5 – 25 mm²	800 V/8 kV/3*)	**)
No. 12-4 AWG			
No. 14-4 AWG			
12 mm			15 mm

GL EPM SEV-EEX SEV N NV FI KEMA S LR UL * CSA **
BKI-EEx

Type	Part no.	Std. pack
WKN 16 SL/U	57.516.9055.0	50
WKN 16 SL/U[2)]	57.516.9055.0	50
35 x 27 x 7,5 EN 60715	98.300.0000.0	1
35 x 24 x 15 EN 60715	98.360.0000.0	1
9006 EN 60715 G-32	98.190.0000.0	1

* CL I, ZN1, AExe II / **CL I, ZN1, Exe II pending

WKN 35 SL/U

fine stranded	stranded	V	A
10 – 35 mm²	10 – 50 mm²	800 V/8 kV/3*)	**)
No. 10-2 AWG			
No. 10-2 AWG			
16 mm			20 mm

GL EPM SEV-EEX SEV N NV FI KEMA S LR UL * CSA **
BKI-EEx

Type	Part no.	Std. pack
WKN 35 SL/U	57.535.9055.0	20
WKN 35 SL/U[2)]	57.535.9055.0	20
35 x 27 x 7,5 EN 60715	98.300.0000.0	1
35 x 24 x 15 EN 60715	98.360.0000.0	1
9006 EN 60715 G-32	98.190.0000.0	1

* CL I, ZN1, AExe II / **CL I, ZN1, Exe II pending

Ground blocks
with screw connection, type *WKN*

selos

For ground blocks of 70 mm² or more only mounting rails from E-copper must be used because of the current carrying capability.

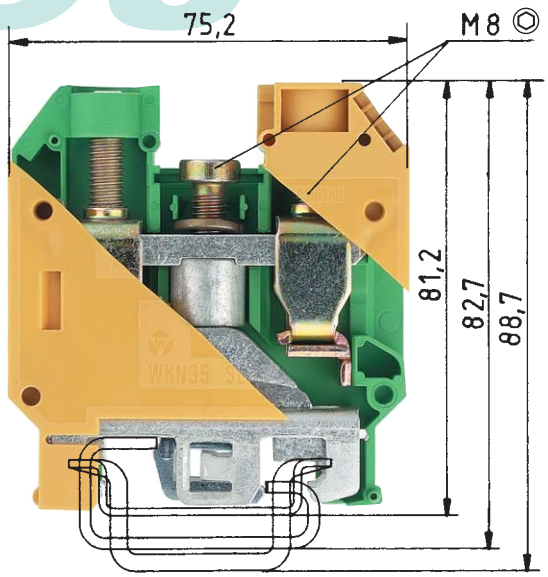

enclosed design available from October 2001

WKN 70 SL/U

	fine stranded	stranded	V	A
DIN VDE 0611 Teil 3/11.89, DIN VDE 0110/01.89	10 – 70 mm²	16 – 95 mm²	800 V/8 kV/3	**)
UL-ratings field/factory wiring				
CSA ratings	CSA No. 6-2/0 AWG		Pending	
Width Wire strip length	24 mm			
Approvals	SEV UL * CSA *			

	Type	Part no.	Std. pack
Ground block with U-foot Color: yellow/green	WKN 70 SL/U	57.570.9055.0	
Ground block for TS 35 EN60715 Color: yellow/green			
Accessories			
1. Mounting rail TS 35, DIN rail, 7.5 mm high L = 2 m			
Mounting rail TS 35, DIN rail, 15mm high L = 2 m	35 x 24 x 15 EN 60715 CU	98.380.0000.0	10
Mounting rail TS 32, G rail L = 2 m	9006 EN 60715 G-32 E-CU	98.220.0000.0	10
2. End clamp with U-foot 10 mm wide			
End clamp TS 35, with screw 8 mm wide			
End clamp TS 32, with screw 7.5 mm wide			
3. End plate, 1.5 mm thick Color: gray			
Color: blue			
End plate, 2 mm thick Color: gray			
Color: blue			
4. Partition, 1.5 mm thick Color: gray			
Color: blue			
Partition, 2 mm thick Color: gray			
Color: blue			
Partition, 3 mm thick Color: gray			
Color: blue			
5. Cross connector (jumper) with screws, E-Cu			
insulated 2pole			
3pole			
to 12pole			
6. Single cover f. cross conn. with marking facility			
7. Partition plate with marking facility			
8. Cover strip for cross conn. over 10 blocks			
Cover strip with warn. symb. over 4 blocks			
For more accessories see pages160-177			
For marking systems see pages 178-179 and 200-202	* CL I, ZN1, AExe II / Exe II pending		
) For the current carrying capability of the mounting rail see section ***facts* & DATA			

Ground blocks for TS 35

selos

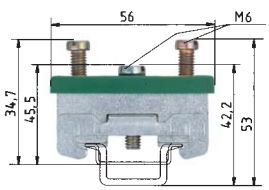

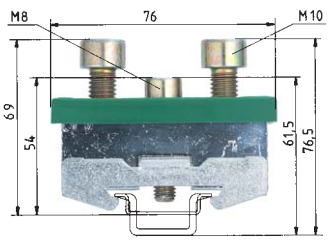

Clamping screw stop-plate, Polyamide 66/6
Clamping body, nickel-plated brass
Screws: nickel-plated brass
Clamping foot: nickel-plated brass
Clamping spring: zinc-plated steel

9700 A/35 E S 35

fine stranded 35 mm² | stranded 50 mm² | V | A **)

9700 A/70 E S 35

fine stranded 70 mm² | stranded 120 mm² | V | A **)
No. 6-2/0 AWG
No. 6-2/0 AWG

Type	Part no.	Std. pack	Type	Part no.	Std. pack
9700 A/35 E S 35	Z2.302.0621.0	25	9700 A/70 E S 35	Z2.302.0421.0	10
35 x 27 x 7,5 EN 60715	98.300.0000.0	1			
35 x 24 x 15 EN 60715	98.360.0000.0	1	35 x 24 x 15 EN 60715 CU	98.380.0000.0	10

Duo feed through blocks, type *WK 4/D...*

selos

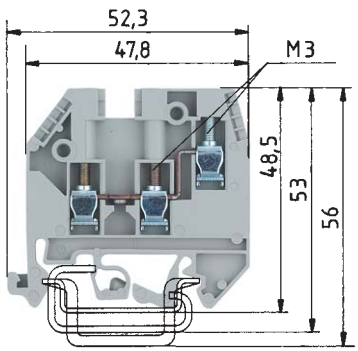

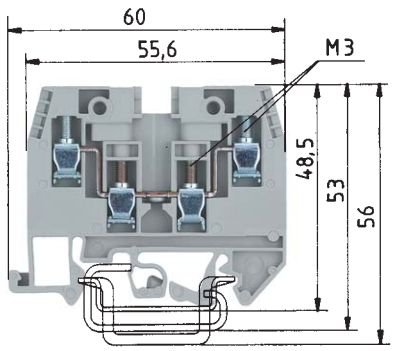

		WK 4/D 1/2 /U			WK 4/D 2/2 /U		
EN 60 947-7-1/DIN VDE 0611 T1		fine stranded	solid	V	fine stranded	solid	V
EN 60 947-7-2/DIN VDE 0611 T3		0.5 – 4 mm²	0.5 – 6 mm²	500 V/6 kV/3	0.5 – 4 mm²	0.5 – 6 mm²	500 V/6 kV/3
UL-ratings	field/factory wiring	No. 22-10 AWG		600 V	No. 22-10 AWG		600 V
CSA ratings		No. 20-10 AWG		600 V	No. 20-10 AWG		600 V
Width	Wire strip length	6 mm		9 mm	6 mm		9 mm
Approvals		GL SEV N NV FI S LR UL * CSA ** VDE B			GL SEV N NV FI S LR UL * CSA ** VDE B		

		Type	Part no.	Std. pack	Type	Part no.	Std. pack
Duo feed-through block 1/2	Color: gray	WK 4/D 1/2 /U	57.504.5055.0	100			
	Color: blue	WK 4/D 1/2 /U BLAU	57.504.5055.6	100			
Duo feed-through block 2/2	Color: gray				WK 4/D 2/2 /U	57.504.5155.0	100
	Color: blue				WK 4/D 2/2 /U BLAU	57.504.5155.6	100
Duo multi-tier block	Color: gray						
Duo ground block 2/2	Color: green/yellow						
Accessories							
1. Mounting rail TS 35, DIN rail, 7.5 mm high	L = 2 m	35 x 27 x 7,5 EN 60715	98.300.0000.0	1	35 x 27 x 7,5 EN 60715	98.300.0000.0	1
Mounting rail TS 35, DIN rail 15 mm high	L = 2 m	35 x 24 x 15 EN 60715	98.360.0000.0	1	35 x 24 x 15 EN 60715	98.360.0000.0	1
Mounting rail TS 32, G rail	L = 2 m	9006 EN 60715 G-32	98.190.0000.0	1	9006 EN 60715 G-32	98.190.0000.0	1
2. End clamp with U-foot	10 mm wide	WE 1/U	Z5.523.5753.0	100	WE 1/U	Z5.523.5753.0	100
End clamp TS 35, with screw	8 mm wide	9708/2 S 35	Z5.522.8553.0	100	9708/2 S 35	Z5.522.8553.0	100
End clamp TS 32 with screw	7.5 mm wide	9708	Z5.522.7053.0	100	9708	Z5.522.7053.0	100
3. End plate, 1.5 mm thick	Color: gray	AP 4/D 1/2	07.311.6455.0	10	AP 4/D..	07.311.6355.0	10
	Color: blue	AP 4/D 1/2 BLAU	07.311.6455.6		AP 4/D.. BLAU	07.311.6355.6	10
4. Partition, 1.5 mm thick	Color: gray						
5. Cross connector with screws, E-Cu							
insulated (jumper)	2pole	IVB WK 4 D...-2	Z7.281.7227.0	10	IVB WK 4 D...-2	Z7.281.7227.0	10
	3pole	IVB WK 4 D...-3	Z7.281.7327.0	10	IVB WK 4 D...-3	Z7.281.7327.0	10
	to 12pole	IVB WK 4 D...-12	Z7.281.8227.0	10	IVB WK 4 D...-12	Z7.281.8227.0	10
6. Jumper comb for lower tier blocks							
insulated	2pole	IVK WK 4/D...-2	Z7.256.2227.0	10	IVK WK 4/D...-2	Z7.256.2227.0	10
	to 6pole	IVK WK 4/D...-6	Z7.256.2627.0	10	IVK WK4/D...-6	Z7.256.2627.0	10
Jumper comb, straight, 1mm thick	2pole						
	to 6pole						
7. Single cover f. cross conn. with marking facility		AD VB 4 GELB	04.326.2153.8	10	AD VB 4 GELB	04.326.2153.8	10
8. Partition plate with marking facility		TS 4/15 GELB	07.311.2953.8	10	TS 4/15 GELB	07.311.2953.8	10
9. Cover strip for cross conn. over 10 blocks		AD VB 6/10 GELB	04.342.0656.8	10	AD VB 6/10 GELB	04.342.0656.8	10
Cover strip with warn. symb. over 4 blocks							
10. Cover with warning symbol							
For more accessories see pages 160-177							
For marking systems see pages 178-179 and 200-202		* CL I, ZN1, AExe II / **CL I, ZN1, Exe II pending			* CL I, ZN1, AExe II / **CL I, ZN1, Exe II pending		

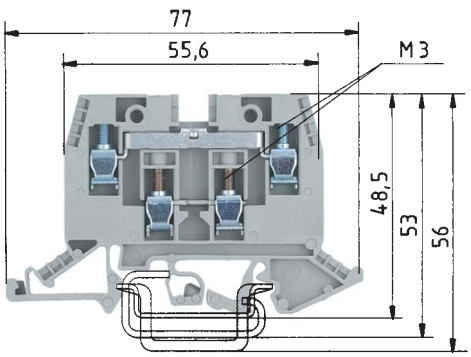

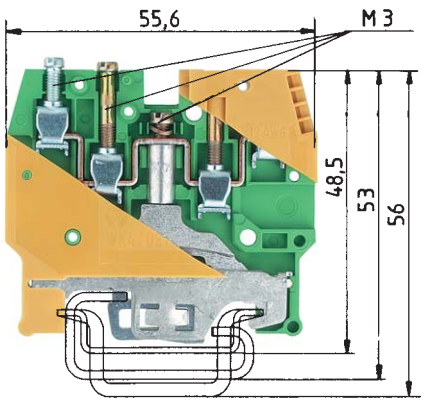

*) 500 V/6 kV/3 with partition plate 07.311.2953.8 between two adjacent blocks
**) with partition plate 07.311.2953.8 between two adjacent blocks

enclosed design
*) For the ratings to adjacent feed-through blocks of the same series and size and the current carrying capability of the mounting rail see section ***facts*** & DATA

WK 4/D EU

		V	A
0.5 – 4 mm²	0.5 – 6 mm²	320 V/4 kV/3*)	26
No. 22-10 AWG		300 V**)	30
No. 20-10 AWG		600 V**)	30
6 mm			9 mm

WK 4/D 2/2 SL U

fine stranded	solid	V	A
0.5 – 4 mm²	0.5 – 6 mm²	500 V/6 kV/3*)	
No. 22-10 AWG			
No. 20-10 AWG			
6 mm			9 mm

Type	Part no.	Std. pack
WK 4/D EU	57.504.5255.0	100
35 x 27 x 7,5 EN 60715	98.300.0000.0	1
35 x 24 x 15 EN 60715	98.360.0000.0	1
9006 EN 60715 G-32	98.190.0000.0	1
WE 1/U	Z5.523.5753.0	100
9708/2 S 35	Z5.522.8553.0	100
9708	Z5.522.7053.0	100
AP 4/D...	07.311.6355.0	10
AP 4/D.. BLAU	07.311.6355.6	10
IVB WK 4/DEU-2	Z7.271.0227.0	10
IVB WK 4 /DEU-3	Z7.271.0327.0	10
IVB WK 4/DEU-12	Z7.271.1227.0	10
IVK WK 4/D...-2	Z7.256.2227.0	10
IVK WK 4/D...-6	Z7.256.2627.0	10
AD VB 4 GELB	04.326.2153.8	10
TS 4/15 GELB	07.311.2953.8	10
AD VB 6/10 GELB	04.342.0656.8	10

* CL I, ZN1, AExe II / **CL I, ZN1, Exe II

Type	Part no.	Std. pack
WK 4/D 2/2 SL U	57.504.9155.0	100
35 x 27 x 7,5 EN 60715	98.300.0000.0	1
35 x 24 x 15 EN 60715	98.360.0000.0	1
9006 EN 60715 G-32	98.190.0000.0	1

* CL I, ZN1, AExe II / **CL I, ZN1, Exe II

Multi-tier blocks
type *WK 4 E...*

selos

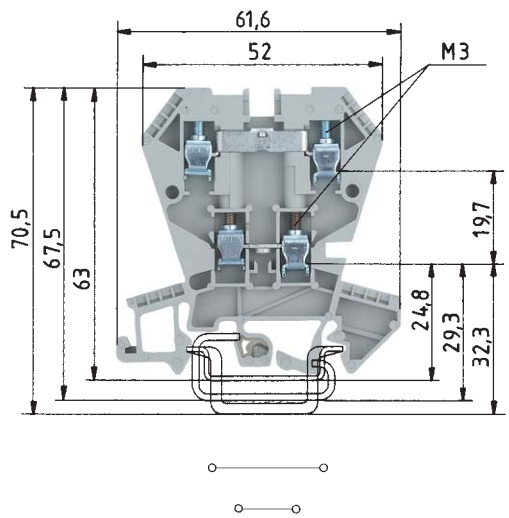

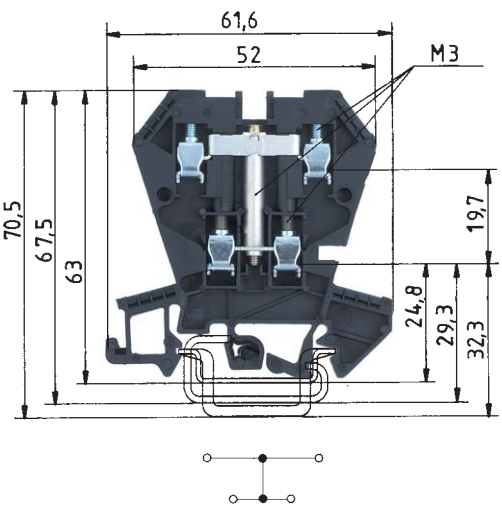

		WK 4 E/U				WK 4 E/U /VB			
EN 60 947-7-1/DIN VDE 0611 T1		fine stranded	solid	V	A	fine stranded	solid	V	A
EN 60 947-7-2/DIN VDE 0611 T3		0.5 – 4 mm²	0.5 – 4 mm²	400 V/6 kV/3[1]	32	0.5 – 4 mm²	0.5 – 4 mm²	400 V/6 kV/3	32
UL-ratings	field/factory wiring	No. 22-10 AWG		300 V	20	No. 22-10 AWG		300 V	20
CSA ratings		No. 20-12 AWG		300 V	10	No. 20-12 AWG		300 V	10
Width	Wire strip length	6 mm			9 mm	6 mm			9 mm
Approvals		GL, Ex, N, NV, FI, CCC, S, LR, UL, * CSA, **				GL, Ex, N, NV, FI, CCC, S, LR, UL, CSA			

		Type	Part no.	Std. pack	Type	Part no.	Std. pack
Multi-tier block	Color: gray	WK 4 E/U	57.404.7055.0	100			
Multi-tier block	Color: black				WK 4 E/U/VB SCHWARZ	57.404.6955.1	100
Multi-tier block with inverted diode	Color: orange						
Multi-tier block	Color: red						
Ground block	Color: green/yellow						
Accessories							
1. Mounting rail TS 35, DIN rail, 7.5 mm high	L = 2 m	35 x 27 x 7,5 EN 60715	98.300.0000.0	1	35 x 27 x 7,5 EN 60715	98.300.0000.0	1
Mounting rail TS 35, DIN rail 15 mm high	L = 2 m	35 x 24 x 15 EN 60715	98.360.0000.0	1	35 x 24 x 15 EN 60715	98.360.0000.0	1
Mounting rail TS 32, G rail	L = 2 m	9006 EN 60715 G-32	98.190.0000.0	1	9006 EN 60715 G-32	98.190.0000.0	1
2. End clamp with U-foot	10 mm wide	WE 1/U	Z5.523.5753.0	100	WE 1/U	Z5.523.5753.0	100
End clamp TS 35, with screw	8 mm wide	9708/2 S 35	Z5.522.8553.0	100	9708/2 S 35	Z5.522.8553.0	100
End clamp TS 32 with screw	7.5 mm wide	9708	Z5.522.7053.0	100	9708	Z5.522.7053.0	100
3. End plate, 1.5 mm thick	Color: gray	AP 4 E	07.311.4055.0	10	AP 4 E	07.311.4055.0	10
Partition, 1.5 mm thick	Color: gray	TW 4 E	07.311.5055.0	10	TW 4 E	07.311.5055.0	10
5. Cross connector with screws, E-Cu							
uninsulated for top tier	2pole	9215-2	Z7.210.3227.0	50		Z7.210.3227.0	50
	3pole	9215-3	Z7.210.3327.0	50		Z7.210.3327.0	50
	to 6pole	9215-6	Z7.210.3627.0	50		Z7.210.3627.0	50
6. Jumper comb for lower tier block							
angled, 1 mm thick insulation	2pole	IVBS WK 4 E-2	Z7.256.4227.0	10	IVBS WK 4 E-2	Z7.256.4227.0	10
	to 6pole	IVBS WK 4 E-6	Z7.256.4627.0	10	IVBS WK 4 E-6	Z7.256.4627.0	10
Jumper comb for lower tier block							
straight, 1mm thick insulated	2pole		IVB WK 4 E-2Z7.255.2227.0	10	IVB WK 4 E-2	Z7.255.2227.0	10
	to 6pole				IVB WK 4 E-6	Z7.255.2627.0	10
7. Single cover f. cross conn. with marking facility		IVB WK 4 E-6	Z7.255.2627.0	10			
8. Snap-in partition plate with marking facility		AD VB 4/15 GELB	04.326.2953.8	10			
9. Cover strip for cross conn. over 10 blocks					AD VB 6/10 E GELB	04.342.2656.8	10
Cover strip with warning symbol over 4 blocks		AD VB 6/10 E GELB	04.342.2656.8	10			
For more accessories see pages 160-177							
For marking systems see pages 178-179 and 200-202							
[1] With end plates 500 V/6 kV/3		* CL I, ZN1, AExe II / **CL I, ZN1, Exe II pending					

Ground block
Type *WK 4 E SL/U*

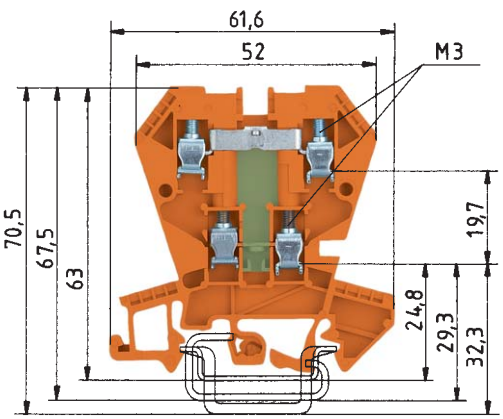

Diode versions: 300 V max.

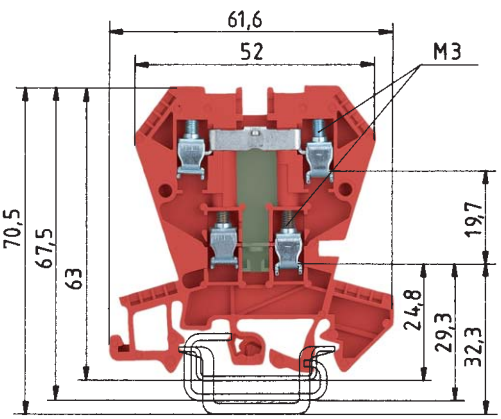

LED version 24 V DC max.

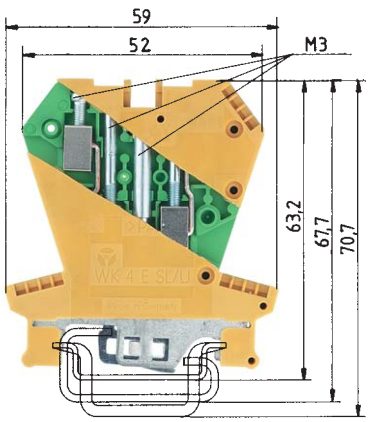

enclosed design

*) Rating to the adjacent feed-through block of the same series and size. For the current carrying capability of the mounting rail see section ***facts*** & DATA

WK 4 E/U...

fine stranded	solid	V	A
0.5 – 4 mm²	0.5 – 4 mm²		
No. 22-10 AWG			
No. 20-12 AWG			
6 mm			9 mm

Type	Part no.	Std. pack
WK 4 E/U...	57.404.XX55.9	
WK 4 E/U...	57.404.XX55.5	
35 x 27 x 7,5 EN 60715	98.300.0000.0	1
35 x 24 x 15 EN 60715	98.360.0000.0	1
9006 EN 60715 G-32	98.190.0000.0	1
WE 1/U	Z5.523.5753.0	100
9708/2 S 35	Z5.522.8553.0	100
9708	Z5.522.7053.0	100
AP 4 E	07.311.4055.0	10
TW 4 E	07.311.5055.0	10
IVBS WK 4 E-2	Z7.256.4227.0	10
IVBS WK 4 E-6	Z7.256.4627.0	10
IVB WK 4 E-2	Z7.255.2227.0	10
IVB WK 4 E-6	Z7.255.2627.0	10

WK 4 E/U...

fine stranded	solid	V	A
0.5 – 4 mm²	0.5 – 4 mm²		
No. 22-10 AWG			
No. 20-12 AWG			
6 mm			9 mm

Type	Part no.	Std. pack
57.404.8355.5 57.404.8055.9 with inverted diode	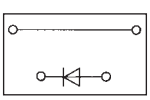 1 A/1000 V	
57.404.8255.5 57.404.8155.9 with inverted diode	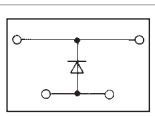 1 A/1000 V	
57.404.7255.5 LED red 57.404.8755.5 LED green	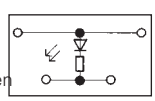 R = 2.2 K 0.35 W	35 x 27 x 7,5 EN 60715 98.300.0000.0 1 35 x 24 x 15 EN 60715 98.360.0000.0 1 9006 EN 60715 G-32 98.190.0000.0 1 WE 1/U Z5.523.5753.0 100
57.404.7455.9 LED red	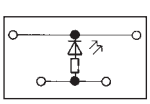 R = 2.2 K 0.35 W	9708/2 S 35 Z5.522.8553.0 100 9708 Z5.522.7053.0 100
57.404.7955.5 57.404.8855.9 with inverted diodes	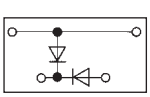 1 A/1000 V	
57.404.8455.5	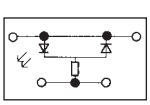 1 A/1000 V R = 6.8 K 0.6 W	
57.404.6255.9	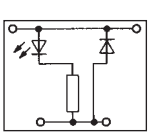 1 A/1000 V R = 2.2 K 0.35 W	

WK 4 E SL/U

fine stranded	solid	V	A
0.5 – 4 mm²	0.5 – 6 mm²	500 V/6 kV/3*)	
No. 22-12 AWG			
No. 22-10 AWG			
6.2 mm			9 mm

Type	Part no.	Std. pack
WK 4 E SL/U	57.504.9255.0	100
35 x 27 x 7,5 EN 60715	98.300.0000.0	1
35 x 24 x 15 EN 60715	98.360.0000.0	1
9006 EN 60715 G-32	98.190.0000.0	1
WE 1/U	Z5.523.5753.0	100
9708/2 S 35	Z5.522.8553.0	100
9708	Z5.522.7053.0	100

* CL I, ZN1, AExe II

Multi-tier feed-through block

selos

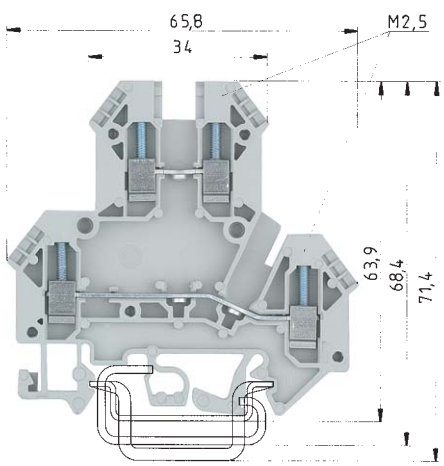

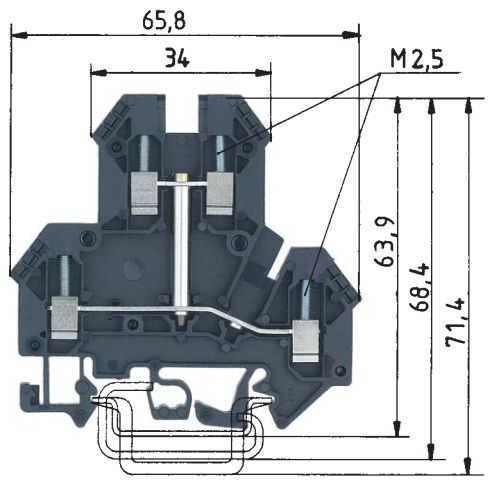

		WKN 2,5 E/U			WKN 2,5 E/U/VB		
		fine stranded	solid	V	fine stranded	solid	V
EN 60 947-7-1/DIN VDE 0611 T1		0.5 – 2.5 mm²	0.5 – 4 mm²	500 V/6 kV/3	0.5 – 2.5 mm²	0.5 – 4 mm²	500 V/6 kV/3
UL-ratings	field/factory wiring	No. 22-12 AWG		600 V	No. 22-12 AWG		600 V
CSA ratings		No. 24-12 AWG		600 V	No. 24-12 AWG		600 V
Width	Wire strip length	5 mm			5 mm		
Approvals		*					

		Type	Part no.	Std. pack	Type	Part no.	Std. pack
Multi-tier feed-through block	Color: gray	WKN 2,5 E/U	57.403.7055.0	100			
uper and lower feed-through tier	Color: black				WKN 2,5 E/U/VB	57.403.6955.1	100
connected							
Accessories							
1. Mounting rail TS 35, DIN rail 7.5mm high	L = 2 m	35 x 27 x 7,5 EN 60715	98.300.0000.0	1	35 x 27 x 7,5 EN 60715	98.300.0000.0	1
Mounting rail TS 35, DIN rail 1.5mm high	L = 2 m	35 x 24 x 15 EN 60715	98.360.0000.0	1	35 x 24 x 15 EN 60715	98.360.0000.0	1
Mounting rail TS 32, G rail	L = 2 m	9006 EN 60715 G-32	98.190.0000.0	1	9006 EN 60715 G-32	98.190.0000.0	1
2. End clamp with U-foot	10 mm wide	WE 1/U	Z5.523.5753.0	100	WE 1/U	Z5.523.5753.0	100
End clamp TS 35, with screw	8 mm wide	9708/2 S 35	Z5.522.8553.0	100	9708/2 S 35	Z5.522.8553.0	100
End clamp TS 32, with screw	7.5 mm wide	9708	Z5.522.7053.0	100	9708	Z5.522.7053.0	100
3. End plate	1.5 mm thick	APN 2,5 E	07.312.1755.0	10	APN 2,5 E	07.312.1755.0	10
4. Partition	1.5 mm thick	TWN 2,5 E	07.312.1855.0	10	TWN 2,5 E	07.312.1855.0	10
5. Cross connector with screws for upper and lower							
feed-through tier, insulated	2pole	IVB WK 2,5 - 2	Z7.280.2227.0	10	IVB WK 2,5 - 2	Z7.280.2227.0	10
	3pole	IVB WK 2,5 - 3	Z7.280.2327.0	10	IVB WK 2,5 - 3	Z7.280.2327.0	10
	to 12pole	IVB WK 2,5 - 12	Z7.280.3227.0	10	IVB WK 2,5 - 12	Z7.280.3227.0	10
6. Single cover f. cross conn. with marking facility		AD VB 2,5 GELB	04.326.2053.8	10	AD VB 2,5 GELB	04.326.2053.8	10
7. Cover strip for cross conn. over 10 blocks		AD VB 5/10 GELB	04.342.0556.8	10	AD VB 5/10 GELB	04.342.0556.8	10
8. Cover strip with warning symbol over 4 blocks			04.343.4756.8	10		04.343.4756.8	10
9. Sanp-in partition plate		TS 2,5 GELB	07.311.2053.8	10	TS 2,5 GELB	07.311.2053.8	10
For marking systems see pages178-183		* CL I, ZN1, AExe II pending					

selos

Sensor/actuator blocks 250 V with LED for 24 V

selos

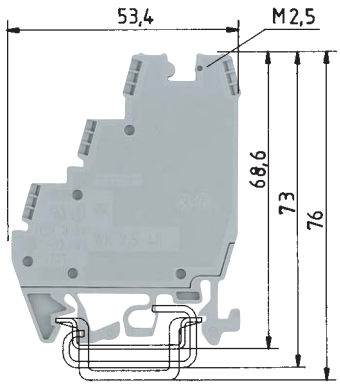

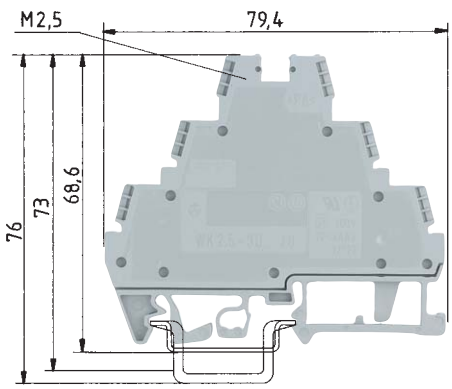

- Compact design for sensor/actuator wiring
- Insulated jumpers eliminate redundant wiring
- The blocks are also available with integrated LED for NPN or PNP sensors
- The use of cross connectors (jumper combs), requires partitions in order to maintain the air and creepage distances.

Indicator: R = 2.2 K; 0.35 W
Lamp color: green: 24 V DC

*) 24 V⎓ with LED

WK 2,5 - 4 KI/U-NGN

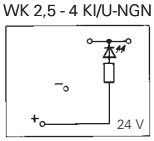

WK 2.5 - 4 KI/U-PGN

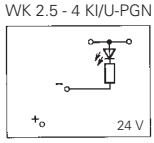

WK 2.5 - 3 D/U-NGN

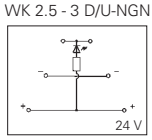

WK 2.5 - 3 D/U-PGN

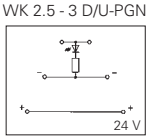

		WK 2,5-4 KI/U			WK 2,5-3 D/U		
		fine stranded	solid	V	fine stranded	solid	V
EN 60 947-7-1/DIN VDE 0611 T1		0.5 – 2.5 mm²	0.5 – 4 mm²	250 V/4 kV/3*)	0.5 – 2.5 mm²	0.5 – 4 mm²	400 V/6 kV/3*)
UL-ratings	field/factory wiring	No. 22-12 AWG		300 V*)	No. 22-12 AWG		300 V*)
CSA ratings		No. 22-12 AWG		300 V*)	No. 22-12 AWG		300 V*)
Width	Wire strip length	6 mm			6 mm		
Approvals		EPM					

		Type	Part no.	Std. pack	Type	Part no.	Std. pack
Sensor/actuator block	Color: gray	WK 2,5 - 4 KI/U	57.503.7855.0	100			
with LED (green) for NPN	Color: gray	WK 2,5 - 4 KI/U-NGN	57.503.7955.0	100			
with LED (green) for PNP	Color: gray	WK 2,5 - 4 KI/U-PGN	57.503.8055.0	100			
with LED (red) for PNP	Color: gray						
Three-tier feed through block	Color: gray				WK 2,5 - 3 D/U	57.503.8855.0	50
with LED for NPN	Color: gray				WK 2,5 - 3 D/U-NGN	57.503.8955.0	50
with LED for PNP	Color: gray				WK 2,5 - 3 D/U-PGN	57.503.9055.0	50
Accessories							
1. Mounting rail TS 35, DIN rail, 7.5 mm high	L = 2 m	35 x 27 x 7,5 EN 60715	98.300.0000.0	1	35 x 27 x 7,5 EN 60715	98.300.0000.0	1
Mounting rail TS 35, DIN rail 15 mm high	L = 2 m	35 x 24 x 15 EN 60715	98.360.0000.0	1	35 x 24 x 15 EN 60715	98.360.0000.0	1
Mounting rail TS 32, G rail	L = 2 m	9006 EN 60715 G-32	98.190.0000.0	1	9006 EN 60715 G-32	98.190.0000.0	1
2. End clamp with U-foot	10 mm wide	WE 2/U	Z5.523.5653.0	100	WE 2/U	Z5.523.5653.0	100
End clamp TS 35, with screw	8 mm wide	9708/2 S 35	Z5.522.8553.0	100	9708/2 S 35	Z5.522.8553.0	100
End clamp TS 32, with screw	7.5 mm wide	9708	Z5.522.7053.0	100	9708	Z5.522.7053.0	100
3. Partition, 2 mm thick	Color: gray	TW 2,5 - 3 K/U	07.312.0555.0	10	TW 2,5 - 3 D/U	07.312.1255.0	50
4. Cross connector with screws, E-Cu							
insulated (jumpers)	2pole, yellow				IVB WK/3D-02	Z7.270.0227.0	10
	3pole, yellow				IVB WK/3D-03	Z7.270.0327.0	10
	to 12pole, yellow				IVB WK/3D-12	Z7.270.1227.0	10
5. Jumper comb, angled (middle & lower tier)							
insulated	2pole, red	IVB WK 2,5-K-2 ROT	Z7.267.0227.5	10	IVB WK 2,5-K-2 ROT	Z7.267.0227.5	10
	to 12pole, red	IVB WK 2,5-K-12 ROT	Z7.267.1227.5	10	IVB WK 2,5-K-12 ROT	Z7.267.1227.5	10
insulated	2pole blue	IVB WK 2,5-K-2 BLAU	Z7.267.0227.6	10	IVB WK 2,5-K-2 BLAU	Z7.267.0227.6	10
	to 12pole blue	IVB WK 2,5-K-12 BLAU	Z7.267.1227.6	10	IVB WK 2,5-K-12 BLAU	Z7.267.1227.6	10

For more accessories see pages 160-177
For marking systems see pages 178-179 and 200-202

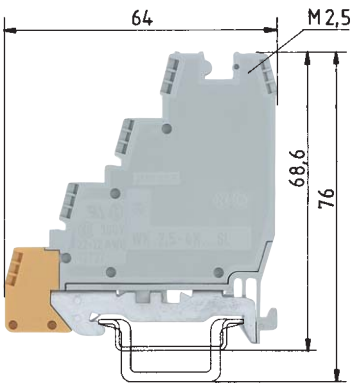

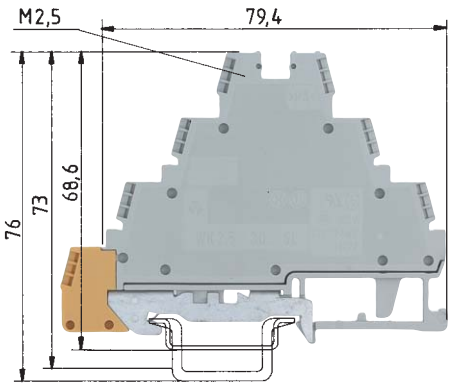

WK 2.5 - 4 KI SL-NGN

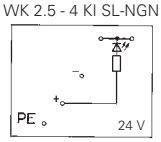

WK 2.5 - 4 KI SL-PGN
WK 2.5 - 4 KI SL-PRT

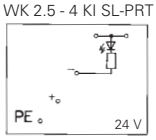

WK 2.5 - 3 D SL-NGN

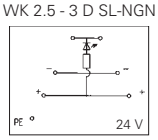

WK 2.5 - 3 D SL-PGN

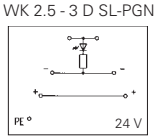

- The four tier terminals (signal, plus, minus, and shiedl/ground) are fully enclosed, clam shell with the ground connection snapped on the lower tier.
- These versions are designed only for TS 35 mounting rails due to the integrated ground foot.
- The rated voltage for the adjacent terminal also apply to the ground terminal.

Indicator: R = 2.2 K; 0.35 W
Lamp color: green: 24 V DC
red: 24 V DC

WK 2,5-4 KI/SL

fine stranded	solid	V	A
0.5 – 2.5 mm²	0.5 – 4 mm²	250 V/4 kV/3*)	24
No. 22-12	AWG	300 V*)	25
No. 22-12	AWG	300 V*)	25
6 mm			7 mm

EPM

WK 2,5-3 D/SL

fine stranded	solid	V	A
0.5 – 2.5 mm²	0.5 – 4 mm²	400 V/6 kV/3*)	24
No. 22-12	AWG	300 V*)	25
No. 22-12	AWG	300 V*)	25
6 mm			7 mm

Type	Part no.	Std. pack	Type	Part no.	Std. pack
WK 2,5 - 4 KI SL	56.503.7355.0	100			
WK 2,5 - 4 KI SL-NGN	56.503.7455.0	100			
WK 2,5 - 4 KI SL-PGN	56.503.7555.0	100			
WK 2,5 - 4 KI SL-PRT	56.503.7655.0	100			
			WK 2,5 - 3 D SL	56.503.8355.0	50
			WK 2,5 - 3 D SL-NGN	56.503.8455.0	50
			WK 2,5 - 3 D SL-PGN	56.503.8555.0	50
35 x 27 x 7,5 EN 60715	98.300.0000.0	1	35 x 27 x 7,5 EN 60715	98.300.0000.0	1
35 x 24 x 15 EN 60715	98.360.0000.0	1	35 x 24 x 15 EN 60715	98.360.0000.0	1
WE 2/U	Z5.523.5653.0	100	WE 2/U	Z5.523.5653.0	100
9708/2 S 35	Z5.522.8553.0	100	9708/2 S 35	Z5.522.8553.0	100
TW 2,5 - 3 K/U	07.312.0555.0	10	TW 2,5 - 3 D/U	07.312.1255.0	50
			IVB WK/3D-02	Z7.270.0227.0	10
			IVB WK/3D-03	Z7.270.0327.0	10
			IVB WK/3D-12	Z7.270.1227.0	10
IVB WK 2,5-K-2 ROT	Z7.267.0227.5	10	IVB WK 2,5-K-2 ROT	Z7.267.0227.5	10
IVB WK 2,5-K-12 ROT	Z7.267.1227.5	10	IVB WK 2,5-K-12 ROT	Z7.267.1227.5	10
IVB WK 2,5-K-2 BLAU	Z7.267.0227.6	10	IVB WK 2,5-K-2 BLAU	Z7.267.0227.6	10
IVB WK 2,5-K-12 BLAU	Z7.267.1227.6	10	IVB WK 2,5-K-12 BLAU	Z7.267.1227.6	10

Sensor/actuator terminals with top entry system

selos

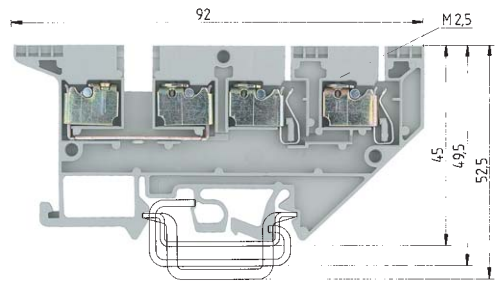

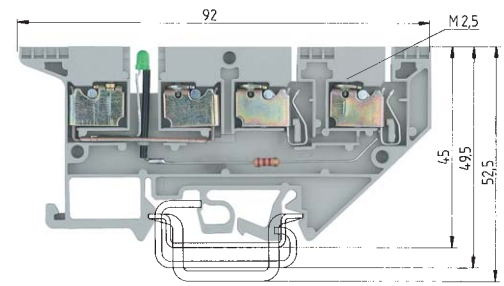

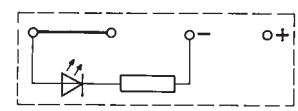

Indicator: R = 2.2 K; 0.35 W
Lamp color: green

		WK 2,5-4 KOI/U				WK 2,5-4 KOI/U-NGN			
		fine stranded	solid	V	A	fine stranded	solid	V	A
EN 60 947-7-1/DIN VDE 0611 T1		0.5 - 2,5 mm²	0.5 - 4 mm²	400 V/6 kV/3	16*)	0.5 - 2.5 mm²	0.5 - 4 mm²	24 DC	16*)
UL-ratings	field/factory wiring	No. 22-12	AWG	300 V	20/30	No. 22-12	AWG	24 V	20/30
CSA ratings		No. 22-12	AWG	300 V	25	No. 22-12	AWG	24 V	25
Width	Wire strip length	5 mm			10 mm	5 mm			10 mm
Approvals									

		Type	Part no.	Std. pack	Type	Part no.	Std. pack
Sensor/actuator terminal	Color: gray	WK 2,5-4 KOI/U	57.503.7055.0	50			
Sensor/actuator terminal W/ LED (NPN)	Color: gray				WK 2,5-4 KOI/U-NGN	57.503.7155.0	50
Accessories							
1. Mounting rail TS 35, DIN rail 7.5mm high	L = 2 m	35 x 27 x 7,5 EN 60715	98.300.0000.0	1	35 x 27 x 7,5 EN 60715	98.300.0000.0	1
Mounting rail TS 35, DIN rail 1.5mm high	L = 2 m	35 x 24 x 15 EN 60715	98.360.0000.0	1	35 x 24 x 15 EN 60715	98.360.0000.0	1
Mounting rail TS 32, G rail	L = 2 m	9006 EN 60715 G-32	98.190.0000.0	1	9006 EN 60715 G-32	98.190.0000.0	1
2. End clamp with U-foot	10 mm wide	WE 1/U	Z5.523.5753.0	100	WE 1/U	Z5.523.5753.0	100
End clamp TS 35, with screw	8 mm wide	9708/2 S 35	Z5.522.8553.0	100	9708/2 S 35	Z5.522.8553.0	100
End clamp TS 32, with screw	7.5 mm wide	9708	Z5.522.7053.0	100	9708	Z5.522.7053.0	100
3. End plate	1.5 mm thick	AP 2,5-4 KO	07.310.9355.0	50	AP 2,5-4 KO	07.310.9355.0	50
4. Partition plate	1.5 mm thick	TW 2,5-4 KO	07.310.9455.0	50	TW 2,5-4 KO	07.310.9455.0	50
5. Cross connector for voltage supply							
uninsulated	2pole	VB WK 2,5 KO-2	07.257.0227.0	100	VB WK 2,5 KO-2	07.257.0227.0	100
	3pole	VB WK 2,5 KO-3	07.257.0327.0	100	VB WK 2,5 KO-3	07.257.0327.0	100
	to 20pole	VB WK 2,5 KO-20	07.257.2027.0	50	VB WK 2,5 KO-20	07.257.2027.0	50
6. Jumper bar for signal,							
uninsulated	2pole	VB WK 2,5-2	Z7.280.0227.0	10	VB WK 2,5-2	Z7.280.0227.0	10
	3pole	VB WK 2,5-3	Z7.280.0327.0	10	VB WK 2,5 3	Z7.280.0327.0	10
	to 6pole	VB WK 2,5-6	Z7.280.0627.0	10	VB WK 2,5-6	Z7.280.0627.0	10
7. Single cover f. cross conn. with marking facility		AD VB 2,5 GELB	04.326.2053.8	10	AD VB 2,5 GELB	04.326.2053.8	10
8. Cover strip with test hole over 10 blocks		AD VB 5/10 P GELB	04.342.3556.8	10	AD VB 5/10 P GELB	04.342.3556.8	10
9. Cover strip for cross connectors over 10 blocks		AD VB 5/10	04.342.0556.0	10	AD VB 5/10	04.342.0556.0	10
10. Partition plate		TS 2,5 GELB	07.311.2053.8	10	TS 2,5 GELB	07.311.2053.8	10
11. Tear-off marking strip, red, marked "+"		9705 A/5/10 B + ROT	04.855.0253.5	25	9705 A/5/10 B + ROT	04.855.0253.5	25
12. Tear-off marking strip, blue, marked "-"		9705 A/5/10 B - BLAU	04.855.0353.6	25	9705 A/5/10 B - BLAU	04.855.0353.6	25
For marking systems see pages 178-179 and 200-202							
*) feed-through 16 A							

selos

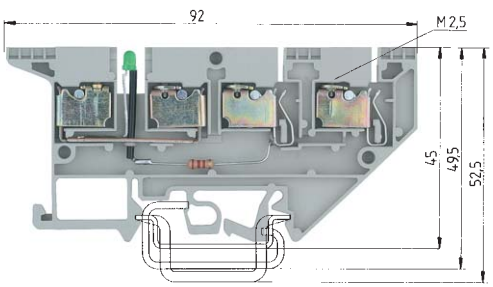

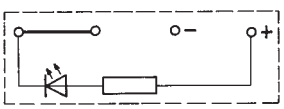

Indicator: R = 2.2 K; 0.35 W
Lamp color: green

Sensor/actuator blocks with TOP connection and universal foot for the connection of three wire sensors.
Space-saving design which distributes the plus-minus lines via pluggable, multi-pole jumpers.
You have to consider the maximum current carrying load of the cross connector of 32A: for the initiator blocks per infeed block, and for the current load per initiator.
Benefits:
- Plus-minus distribution via jumpering saves space and wiring material
- Only one feed-through block is required for the signal which guarantees a clear wiring
- One block per initiator guarantees a clear assignment of the power circuits
- Blocks with TOP connection guarantee clear wire connections
- The blocks of only 5mm width save mounting space
- Trouble shooting is easy as the switching status is indicated via LEDs
- Ample marking space

WK 2,5-4 KOI/U-PGN

fine stranded	solid	V	A
0.5 - 2.5 mm²	0.5 - 4 mm²	24 DC	16*)
No. 22-12 AWG		24 V	20/30
No. 22-12 AWG		24 V	25
5 mm			10 mm

Type	Part no.	Std. pack
WK 2,5-4 KOI/U-PGN	57.503.7255.0	50
AP 2,5-4 KO	07.310.9355.0	50
TW 2,5-4 KO	07.310.9455.0	50
VB WK 2,5 KO-2	07.257.0227.0	100
VB WK 2,5 KO-3	07.257.0327.0	100
VB WK 2,5 KO-20	07.257.2027.0	50
VB WK 2,5-2	Z7.280.0227.0	10
VB WK 2,5 3	Z7.280.0327.0	10
VB WK 2,5-6	Z7.280.0627.0	10
AD VB 2,5 GELB	04.326.2053.8	10
AD VB 5/10 P GELB	04.342.3556.8	10
AD VB 5/10	04.342.0556.0	10
TS 2,5 GELB	07.311.2053.8	10
9705 A/5/10 B + ROT	04.855.0253.5	25
9705 A/5/10 B - BLAU	04.855.0353.6	25

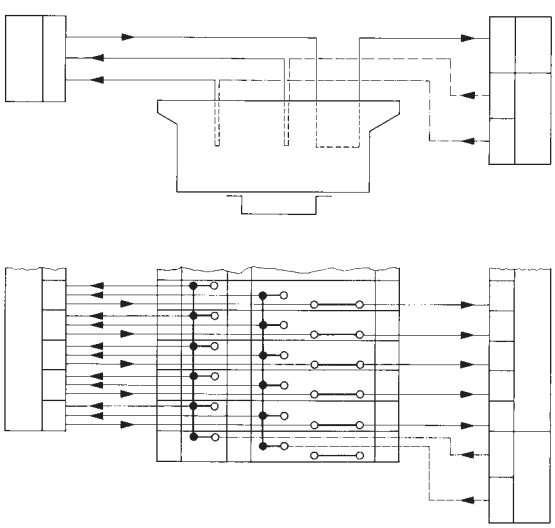

Disconnect blocks with U-foot, type *WK*

selos

Fuse plug:
Nominal voltage: 250 V ~
Nominal current accord. to: VDE 0820 T2/IEC 257 at a power loss of 1.5 W.
– 6.3 A for single blocks
– 4 A for blocks mounted adjacent to each other

Indicator (24 V): Lamp color: red
Current consumed 10.3 mA
Indicator (110-220 V): Lamp color: red
Current input: 0.3 mA

*) Voltage and current are determined by the built-in LED and the fuse inserted into the fuse holder

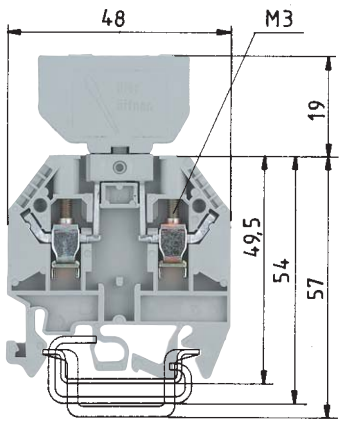

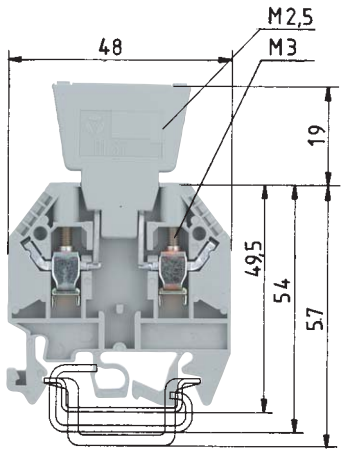

The current carrying load depends on the built-in component.
Temporary peak voltage 1000 V.

Pole assignment of the diode:	Anode Cathode	Cathode [1] Anode[2]

		WK 4 TKG... SIST				WK 4 TKG... DIST			
EN 60 947-7-1/DIN VDE 0611 Teil 1		fine stranded	solid	V	A	fine stranded	solid	V	A
EN 60 127-6/DIN VDE 0820 T6		0.5 – 4 mm²	0.5 – 6 mm²	800 V/8 kV/3*)	6.3*)	0.5 – 4 mm²	0.5 – 6 mm²	800 V/8 kV/3	
UL-ratings	field/factory wiring	No. 22-10 AWG		300 V*)	10	No. 22-10 AWG		300 V	10
CSA ratings		No. 20-10 AWG		250 V*)	6.3	No. 20-10 AWG		250 V	6.3
Width	Wire strip length	6 mm			9 mm	6 mm			9 mm
Approvals									

		Type	Part no.	Std. pack	Type	Part no.	Std. pack
Disconnect block	Color: gray	WK 4 TKG/U	57.504.4055.0	100	WK 4 TKG/U	57.504.4055.0	100
Fuse holder for 5 x 20 fuse	Color: blue	Si ST	Z1.299.4055.0	10			
Fuse holder with indicator (24 V)	Color: gray	Si ST LED	Z1.299.4155.0	10			
Fuse holder with indicator (110-220 V)	Color: gray	Si ST GL	Z1.299.4255.0	10			
Diode plug, without contacts J_{max} = 10 A	Color: gray				DIST ...	Z1.299.3055.0	10
Diode plug - diode J_{max} = 11 A	Color: gray				DIST-1 N 4007-1[1]	Z1.299.3155.0	10
Diode plug - diode J_{max} = 11 A	Color: gray				DIST-1 N 4007-2[2]	Z1.299.3355.0	10
Diode plug with jumper J_{max} = 10 A	Color: gray				DIST-D	Z1.299.3255.0	10
Knife edge disconnect block	Color: gray						
	Color: blue						
– with 2 test bolts	Color: gray						
Invertible plug disconnect block							
m. Inver. plug w/o test bolt	Color: gray						
– with test bolts left and right	Color: gray						
Feed through block	Color: gray						
Accessories							
1. Mounting rail TS 35, DIN rail, 7.5 mm high	L = 2 m	35 x 27 x 7,5 EN 60715	98.300.0000.0	1	35 x 27 x 7,5 EN 60715	98.300.0000.0	1
Mounting rail TS 35, DIN rail 15 mm high	L = 2 m	35 x 24 x 15 EN 60715	98.360.0000.0	1	35 x 24 x 15 EN 60715	98.360.0000.0	1
Mounting rail TS 32, G rail	L = 2 m	9006 EN 60715 G-32	98.190.0000.0	1	9006 EN 60715 G-32	98.190.0000.0	1
2. End clamp with U-foot	10 mm wide	WE 2/U	Z5.523.5653.0	100	WE 2/U	Z5.523.5653.0	100
End clamp TS 35, with screw	8 mm wide	9708/2 S 35	Z5.522.8553.0	100	9708/2 S 35	Z5.522.8553.0	100
End clamp TS 32, with screw	7.5 mm wide	9708	Z5.522.7053.0	100	9708	Z5.522.7053.0	100
3. End plate, 1.5 mm thick	Color: gray	AP 4 TK	07.311.6155.0	10	AP 4 TK	07.311.6155.0	10
	Color: blue						
4. Partition, 1.5 mm thick	Color: gray	TW 4 TK	07.311.8155.0	10	TW 4 TK	07.311.8155.0	10
	Color: blue						
5. Jumper comb	insulated 2pole	IVB 1 WK 4..-2	Z7.255.4227.0	10	IVB 1 WK 4..-2	Z7.255.4227.0	10
	to 6pole	IVB 1 WK 4..-6	Z7.255.4627.0	10	IVB 1 WK 4..-6	Z7.255.4627.0	10
6. Cover f. cross conn. with marking facility							
7. Snap-in partition plate with marking facility							
For marking systems see pages 178-179 and 200-202							

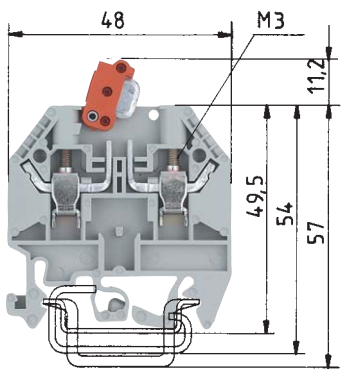

The disconnecting knife in these WK versions swing in and out on a pivot point. The distinctive color of the disconnecting lever signals the open state. The terminals can be connected with the lever open or closed. Designs with a different number and arrangement of test sockets permit safe measurements using the test plug.

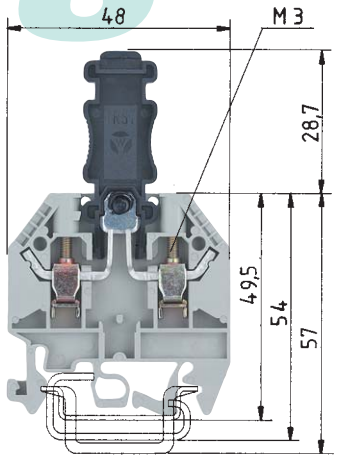

The plug in disconnect terminal has the same profile as the modular terminal WK4. The isolating connector is detachable and can be fitted as a dummy plug. This signals the open state. Designs with different numbers of test sockets permit safe measurements using the test plug.

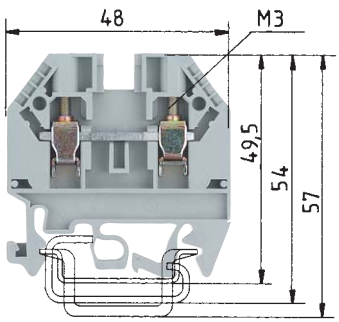

same dimensions as types
WK 4 TKG/U and WK 4/TKM/U
for symetry across the rail

WK 4/TKM

fine stranded	solid	V	A
0.5 – 4 mm²	0.5 – 6 mm²	800 V/8 kV/3*)	20
No. 22-10 AWG		600 V	20
No. 22-10 AWG		600 V*)	20
6 mm			9 mm

Type	Part no.	Std. pack
WK 4/TKM/U	57.504.2055.0	100
WK 4/TKM/U BLAU	57.504.2055.6	100
WK 4/TKM/P3/U	57.504.2355.0	100
35 x 27 x 7,5 EN 60715	98.300.0000.0	1
35 x 24 x 15 EN 60715	98.360.0000.0	1
9006 EN 60715 G-32	98.190.0000.0	1
WE 2/U	Z5.523.5653.0	100
9708/2 S 35	Z5.522.8553.0	100
9708	Z5.522.7053.0	100
AP 4 TK	07.311.6155.0	10
AP 4 TK BLAU	07.311.6155.6	10
TW 4 TK	07.311.8155.0	10
TW 4 TK BLAU	07.311.8155.6	
IVB 1 WK 4..-2	Z7.255.4227.0	10
IVB 1 WK 4..-6	Z7.255.4627.0	10

*) **Version with test bolt:** CSA: 300 V
EN 60 947-7-1/DIN VDE 0611 T1 – 690 V/6 kV/3
Test bolt can be loaded with 1 A

WK 4 TKG-TRST/U

fine stranded	solid	V	A
0.5 – 4 mm²	0.5 – 6 mm²	800 V/8 kV/3*)	20
No. 22-10 AWG		300 V	10
No. 22-10 AWG		600 V*)	20
6 mm			9 mm

Type	Part no.	Std. pack
WK 4 TKG-TRST/U	57.504.4555.0	100
WK 4 TKG-TRST P3/U	57.504.4855.0	100
35 x 27 x 7,5 EN 60715	98.300.0000.0	1
35 x 24 x 15 EN 60715	98.360.0000.0	1
9006 EN 60715 G-32	98.190.0000.0	1
WE 2/U	Z5.523.5653.0	100
9708/2 S 35	Z5.522.8553.0	100
9708	Z5.522.7053.0	100
AP 4 TK	07.311.6155.0	10
TW 4 TK	07.311.8155.0	10
IVB 1 WK 4..-2	Z7.255.4227.0	10
IVB 1 WK 4..-6	Z7.255.4627.0	10

*) **Version with test bolt:** CSA: 300 V
EN 60 947-7-1/DIN VDE 0611 T1 – 690 V/6 kV/3
Test bolt can be loaded with 1 A

WK 4 TKS D/U

fine stranded	solid	V	A
0.5 – 4 mm²	0.5 – 6 mm²	800 V/8 kV/3	32
No. 22-10 AWG		300 V	25
No. 20-10 AWG		600 V	20
6 mm			9 mm

Type	Part no.	Std. pack
WK 4 TKS D/U	57.504.4455.0	100
35 x 27 x 7,5 EN 60715	98.300.0000.0	1
35 x 24 x 15 EN 60715	98.360.0000.0	1
9006 EN 60715 G-32	98.190.0000.0	1
WE 2/U	Z5.523.5653.0	100
9708/2 S 35	Z5.522.8553.0	100
9708	Z5.522.7053.0	100
AP 4 TK	07.311.6155.0	10
TW 4 TK	07.311.8155.0	10
IVB 1 WK 4..-2	Z7.255.4227.0	10
IVB 1 WK 4..-6	Z7.255.4627.0	10
AD VB 4 GELB	04.326.2153.8	10
TS 4 GELB	07.311.2153.8	10

Fuse blocks with U-foot, type *WK*

selos

Fuse terminals of this type have a hinged fuse carrier. This takes the mini 5 x 20, 5 x 25, and 5 x 30 mm (width of terminal 8mm) or 6.3 x 32 mm (width 10 mm). The swivel carrier has locking points both when open and closed and can be sealed. All terminals are available in two versions – with or without red LED indicator

Rated current in accordance with VDE 0820 T2/IEC 257

1) up to a power loss of 1.5 W
2) up to a power loss of 2.5 W
*) Voltage and current are determined by the LED installed and fuse used.

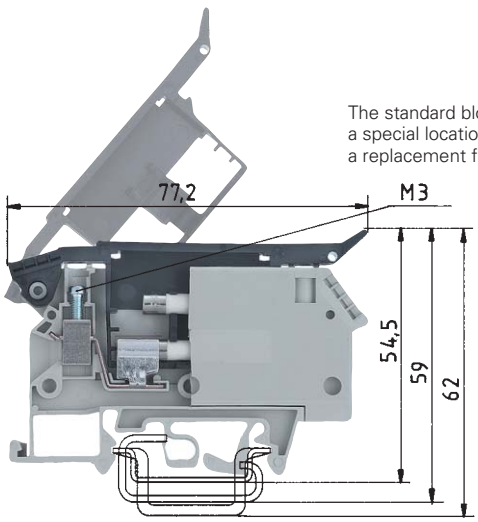

for 5 mm fuses

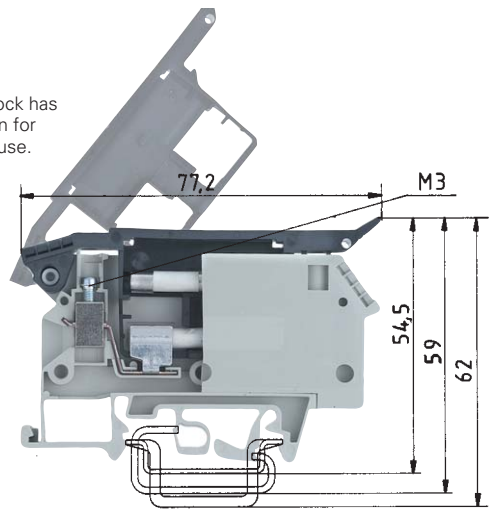

for 1/4 x 1 1/4 fuses

		WK 4 THSI 5... /U				WK 4 THSI 6,3... /U			
		fine stranded	solid	V	A	fine stranded	solid	V	A
EN 60 947-7-1, EN 60 127-6		0.5 – 4 mm²	0.5 – 6 mm²	800 V/8 kV/3*)	6,3 1)	0.5 – 4 mm²	0.5 – 6 mm²	800 V/8 kV/3*)	10 2)
UL-ratings		No. 22-10	AWG	600 V*)	15	No. 22-10	AWG	600 V*)	15
CSA ratings		No. 22-10	AWG	600 V*)	6,3	No. 22-10	AWG	600 V*)	10
Width	Wire strip length	8 mm			8 mm	10 mm			8 mm
Approvals									

		Type	Part no.	Std. pack	Type	Part no.	Std. pack
Fuse block	Color: gray	WK 4/THSi 5 ... U	57.904.5355.0	50	WK 4/THSi 6,3 ... U	57.904.6355.0	50
– with LED	5 - 12 V ~/⎓ current consumed. 2.3-7 mA	WK 4/THSi 5 LED 12 U	57.904.5455.0	50	WK 4/THSi 6,3 LED 12 U	57.904.6455.0	50
– with LED	12 - 24 V ~/⎓ current consumed. 2.8-6.2 mA	WK 4/THSi 5 LED 24 U	57.904.5555.0	50	WK 4/THSi 6,3 LED 24 U	57.904.6555.0	50
– with LED	24 - 60 V ~/⎓ current consumed. 1.5-4 mA	WK 4/THSi 5 LED 60 U	57.904.5655.0	50	WK 4/THSi 6,3 LED 60 U	57.904.6655.0	50
– with lamp	110 -250 V ~/⎓ current consumed. 0.13 – 0.55 mA	WK 4/THSi 5 GL 250 U	57.904.5755.0	50	WK 4/THSi 6,3 GL 250 U	57.904.6755.0	50
– with lamp	380 -500 V ~/⎓ current consumed. 0.2-0.3 mA	WK 4/THSi 5 GL 500 U	57.904.5855.0	50	WK 4/THSi 6,3 GL 500 U	57.904.6855.0	50
Fuse block	Color: gray						
– with screw cap A DIN 41674 for G-fuses DIN 41571, 250 V, 5 x 20 mm							
– with screw cap B DIN 41674 for G fuses DIN 41576, 250 V, 5 x 25 mm							
– with screw cap A DIN 41674 for G-fuses , 500 V, 5 x 30 mm							
– with screw cap for G-fuses, 500 V, ¼ x 1¼" (6.3 x 32 mm)							
Feed-through block, same dimensions as fuse block	Color: gray						
Accessories							
1. Mounting rail TS 35, DIN rail, 7.5 mm high	L = 2 m	35 x 27 x 7,5 EN 60715	98.300.0000.0	1	35 x 27 x 7,5 EN 60715	98.300.0000.0	1
Mounting rail TS 35, DIN rail 15mm high	L = 2 m	35 x 24 x15 EN 60715	98.360.0000.0	1	35 x 24 x 15 EN 60715	98.360.0000.0	1
Mounting rail TS 32, G rail	L = 2 m	9006 EN 60715 G-32	98.190.0000.0	1	9006 EN 60715 G-32	98.190.0000.0	1
2. End clamp with U-foot	10 mm wide	WE 1/U	Z5.523.5753.0	100	WE 1/U	Z5.523.5753.0	100
End clamp TS 35, with screw	8 mm wide	9708/2 S 35	Z5.522.8553.0	100	9708/2 S 35	Z5.522.8553.0	100
End clamp TS 32, with screw	7.5 mm wide	9708	Z5.522.7053.0	100	9708	Z5.522.7053.0	100
3. End plate, 1.5 mm thick	Color: gray						
4. Cross connector with screws, E-Cu					Jumper combs available on request		
uninsulated	2pole						
	3pole						
	to 6pole						
5. Transparent cover (for 1 block)							
6. Connecting strip for ganging levers together	red	VST WK4 THSI	05.563.8053.0	50	VST WK4 THSI	05.563.8053.0	50
For marking systems see pages 178-179 and 200-202					Jumper combs available upon request		

selos

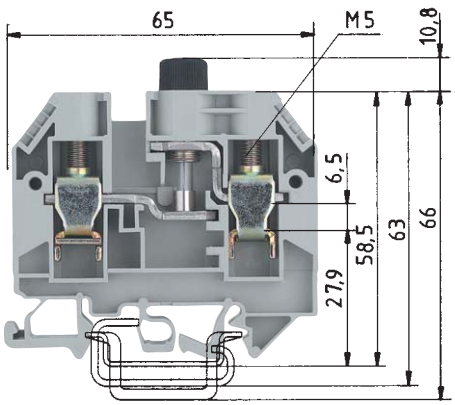

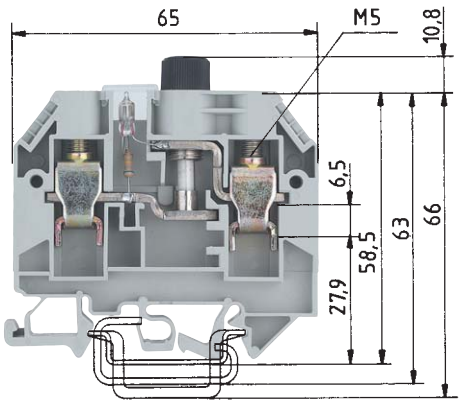

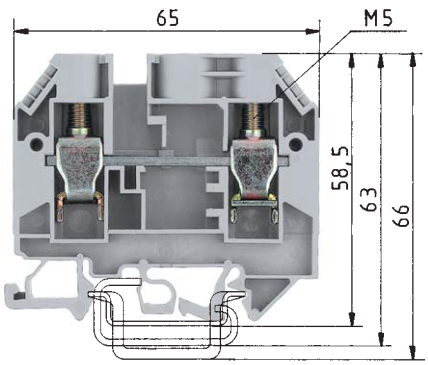

*) Voltage and current are determined by the built-in LED and the inserted G-fuse.
9) 6.3 A up to a power loss of 1.6 W
10) 10 A up to a power loss of 2.5 W

*) Voltage and current are determined by the built-in indicator and the inserted G-fuse.
7) 6.3 A up to a power loss of 1.6 W
8) 10 A up to a power loss of 2.5 W

WK 10/SI ... /U

fine stranded	solid/stranded	V	A
1 – 10 mm²	1 – 16 mm²	500 V/6 kV/3*)	10*)
No. 22-6 AWG		600 V*)	15
No. 16-6 AWG		600 V*)	max. 15
12 mm			13 mm

1) 2) 3) 4) LR 5) 6) 7) 8)

WK 10/SI ... /U with indicator

fine stranded	solid/stranded	V	A
1 – 10 mm²	1 – 16 mm²	500 V/6 kV/3*)	max. 10*)
No. 22-6 AWG		600 V*)	15
No. 16-6 AWG		600 V*)	max. 15
12 mm			13 mm

1) 2) 3) 4) 5) 6)

WK 10/SI U D

fine stranded	solid/stranded	V	A
1 – 10 mm²	1 – 16 mm²	500 V/6 kV/3	57
No. 22-6 AWG		600 V	50
No. 16-6 AWG		600 V	65
12 mm			13 mm

Type	Part no.	Std. pack
WK 10/Si U 5 x 20 2) - 8) 9) 10)	57.910.5055.0	50
WK 10/Si U 5 x 25 2) - 8) 9) 10)	57.910.5155.0	50
WK 10/Si U 5 x 30 2) - 8) 10)	57.910.5255.0	50
WK 10/Si U 6,3 x 32 1) - 8) 10)	57.910.5355.0	50
35 x 27 x 7,5 EN 60715	98.300.0000.0	1
35 x 24 x 15 EN 60715	98.360.0000.0	1
9006 EN 60715 G-32	98.190.0000.0	1
WE 1/U	Z5.523.5753.0	100
9708/2 S 35	Z5.522.8553.0	100
9708	Z5.522.7053.0	100
AP 10/Si	07.311.4155.0	10
VB WK 10/Si-2	Z7.287.0227.0	10
VB WK 10/Si-3	Z7.287.0327.0	10
VB WK 10/Si-6	Z7.287.0627.0	10
	04.312.2056.0	100

Screw cap made from thermoset type 131 and silver-plated brass

Type	Part no.	Std. pack
WK 10/Si U 5 x 20M, NGL 2) - 6) 7) 8)	57.910.5455.0	50
WK 10/Si U 5 x 20M, GLB 2) - 6) 7) 8)	57.910.5855.0	50
WK 10/Si U 6,3 x 32M, NGL 1) - 6) 8)	57.910.5755.0	50
WK 10/Si U 6,3 x 32M, GLB 1) - 6) 8)	57.910.6155.0	50
35 x 27 x 7,5 EN 60715	98.300.0000.0	1
35 x 24 x 15 EN 60715	98.360.0000.0	1
9006 EN 60715 G-32	98.190.0000.0	1
WE 1/U	Z5.523.5753.0	100
9708/2 S 35	Z5.522.8553.0	100
9708	Z5.522.7053.0	100
AP 10/Si	07.311.4155.0	10
VB WK 10/Si-2	Z7.287.0227.0	10
VB WK 10/Si-3	Z7.287.0327.0	10
VB WK 10/Si-6	Z7.287.0627.0	10
	04.312.2056.0	100

	VDE	CSA	UL
57.910.5453.0 Indicator Current consumed: 0.16 – 0.8 mA 9)	110 - 250 V ~	500 V	150 V
57.910.5853.0 Indicator Current consumed: 24 mA 10)	28 V ~	28 V	28 V
57.910.5753.0 Indicator Current consumed: 0.16 – 0.8 mA 9)	110 - 500 V ~	500 V	150 V
57.910.6153.0 Indicator Current consumed: 24 mA 10)	28 V ~	28 V	28 V

Lamp color of the indicator: 9) red, 10) yellow

Type	Part no.	Std. pack
WK 10/Si U D	57.910.4955.0	50
35 x 27 x 7,5 EN 60715	98.300.0000.0	1
35 x 24 x 15 EN 60715	98.360.0000.0	1
9006 EN 60715 G-32	98.190.0000.0	1
WE 1/U	Z5.523.5753.0	100
9708/2 S 35	Z5.522.8553.0	100
9708	Z5.522.7053.0	100
AP 10/Si	07.311.4155.0	10
VB WK 10/Si-2	Z7.287.0227.0	10
VB WK 10/Si-3	Z7.287.0327.0	10
VB WK 10/Si-6	Z7.287.0627.0	10
	04.312.2056.0	100

Fuse blocks
with U-foot, type *WK*

selos

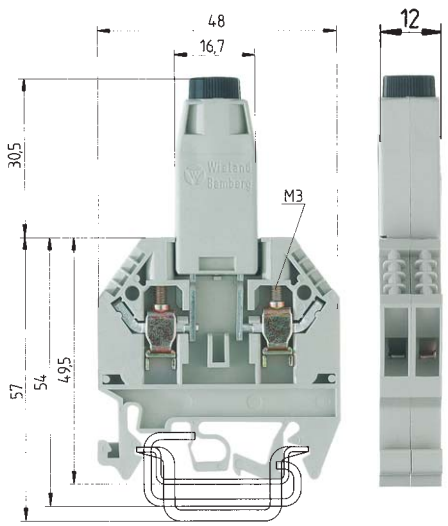

*) Voltage and current are determined by the fuse used.

Rated current in accordance to VDE 0820 T2/EN 60 127-2, up to a power loss of 1.6 W

WK 4/Si-D/U 5 x 25

		fine stranded	solid	V	A
EN 60 947-7-1, EN 60 127-6		0.5 – 4 mm²	0.5 – 6 mm²	800 V/8 kV/3*)	6.3*)
UL-ratings					
CSA ratings		No. 20-10	AWG	250 V	10
Width	Wire strip length	12 mm			9 mm
Approvals					

		Type	Part no.	Std. pack
Fuse block	Color: gray			
– Fused feed through terminal block				
(G-screw cap B DIN 41674, 5 x 25 mm – 250 V/6.3 A)		WK 4/Si-D/U 5 x 25	57.504.1655.0	50
– Fused feed through terminal block				
(G-screw cap A DIN 41674, 5 x 20 mm – 250 V/6.3 A)		WK 4/Si-D/U 5 x 20	57.504.1755.0	50
Accessories				
1. Mounting rail TS 35, DIN rail, 7.5 mm high	L = 2 m	35 x 27 x 7,5 EN 60715	98.300.0000.0	1
Mounting rail TS 35, DIN rail 1.5mm high	L = 2 m	35 x 24 x 15 EN 60715	98.360.0000.0	1
Mounting rail TS 32, G rail		9006 EN 60715 G-32	98.190.0000.0	1
2. End clamp with U-foot	10 mm wide	WE 1/U	Z5.523.5753.0	100
End clamp TS 35, with screw	8 mm wide	9708/2 S 35	Z5.522.8553.0	100
End clamp TS 32, with screw	7.5 mm wide	9780	Z5.522.7053.0	100
3. End plate	1.5 mm wide	AP 4 TK	07.311.6155.0	10

For marking systems see pages 178-179 and 200-202

selos

Fuse block for NEOZED® mounting on TS 35 and TS 32 rail

selos

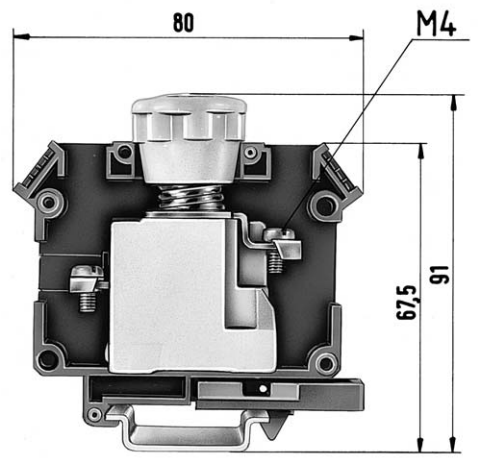

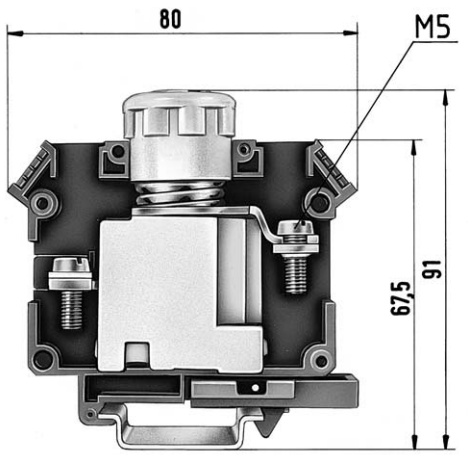

*) Current and voltage are determined by the fuse

		9700 B/30 Si E 14/S 35			2–16 A	9700 B/30 Si E 18/S 35			2–63 A
		fine stranded	solid	V	A	fine stranded	solid/stranded	V	A
DIN VDE 0636		1.5 – 4 mm²	1.5 – 4 mm²	400 V ~*)	16*)	1.5 – 25 mm²	1.5 – 25 mm²	400 V ~*)	63*)
UL-ratings									
CSA ratings									
Width	Wire strip length	30 mm			10 mm	30 mm			12 mm
Approvals									

		Type	Part no.	Std. pack	Type	Part no.	Std. pack
Fuse block	Color: gray						
complete with closed insulating housing		9700 B/30 Si E 14/S 35	56.904.4055.0	20	9700 B/30 Si E 18/S 35	56.925.4055.0	20
Accessories							
1. Mounting rail TS 35, DIN rail, 7.5 mm high	L = 2 m	35 x 27 x 7,5 EN 60715	98.300.0000.0	1	35 x 27 x 7,5 EN 60715	98.300.0000.0	1
Mounting rail TS 35, DIN rail 1.5mm high	L = 2 m	35 x 24 x 15 EN 60715	98.360.0000.0	1	35 x 24 x 15 EN 60715	98.360.0000.0	1
Mounting rail TS 32, G rail							
2. End clamp with U-foot	10 mm wide	WE 1/U	Z5.523.5753.0	100	WE 1/U	Z5.523.5753.0	100
End clamp TS 35, with screw	8 mm wide	9708/2 S 35	Z5.522.8553.0	100	9708/2 S 35	Z5.522.8553.0	100
End clamp TS 32, with screw	7.5 mm wide						
3. NEOZED® adapter sleeve	2 A – pink		05.595.9200.0	50		05.595.5900.0	50
	4 A – brown		05.595.9300.0	50		05.595.6000.0	50
	6 A – green		05.595.9400.0	50		05.595.6100.0	50
	10 A – red		05.595.9500.0	50		05.595.6200.0	50
	16 A – gray					05.595.6300.0	50
	20 A – blue					05.595.6400.0	50
	25 A – yellow					05.595.6500.0	50
	35 A – black					05.595.6600.0	50
	50 A – white					05.595.6700.0	50
4. Cover cap			04.326.1053.0	100		04.326.1053.0	100
5. Jumper comb							
	6pole					07.250.3027.0	25
	uninsulated10pole					07.250.3127.0	10
6. Special retaining clip						05.549.0500.0	
For marking systems see pages 178-179 and 200-202							
NEOZED® = registered trademark of Siemens AG							

selos

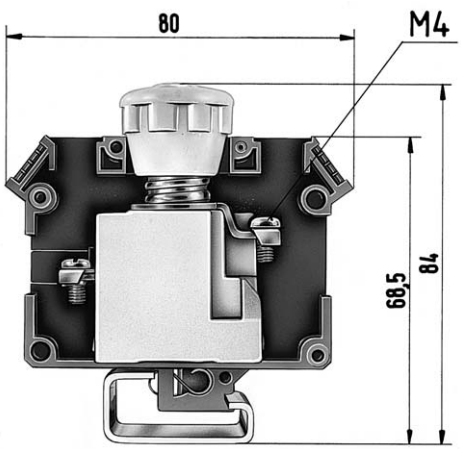

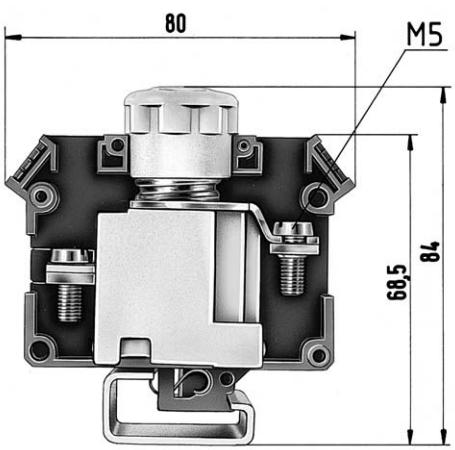

9700 B/30 Si E 14/S 32 — 2–16 A

fine stranded	solid	V	A
1.5 – 4 mm²	1.5 – 4 mm²	400 V ~*)	16*)

30 mm — 10 mm

Type	Part no.	Std. pack
9700 B/30 Si E 14/S 35	54.904.4055.0	20
9006 EN 60715 G-32	98.190.0000.0	1
WE 1/U	Z5.523.5753.0	100
9780	Z5.522.7053.0	100
	05.595.9200.0	50
	05.595.9300.0	50
	05.595.9400.0	50
	05.595.9500.0	50
	04.326.1053.0	100

9700 B/30 Si E 18/S 32 — 2–63 A

fine stranded	solid/stranded	V	A
1.5 – 25 mm²	1.5 – 25 mm²	400 V ~*)	63*)

30 mm — 12 mm

Type	Part no.	Std. pack
9700 B/30 Si E 18/S 32	54.925.4055.0	20
9006 EN 60715 G-32	98.360.0000.0	1
WE 1/U	Z5.523.5753.0	100
9780	Z5.522.7053.0	100
	05.595.5900.0	50
	05.595.6000.0	50
	05.595.6100.0	50
	05.595.6200.0	50
	05.595.6300.0	50
	05.595.6400.0	50
	05.595.6500.0	50
	05.595.6600.0	50
	05.595.6700.0	50
	04.326.1053.0	100
	07.250.3027.0	25
	07.250.3127.0	10
	05.549.0500.0	

Compensating terminals with trimming potentiometer and as a potential divider / U-foot

selos

The compensating terminal is available from10 to 50 Ohms. The 12 mm width has two clamping points for connectring the adjustable resistance and two clamping points for connecting the return conductor. A marking facility is provided for each clamping point. Switch symbols on the insulating housing identify the connections and the direction of rotation for the adjustable resistance. The device operates with a linear characteristic. The fine spread of the main spindle enables the desired resistance value to be set accurately. Insulating housing with snap on end section.

Electrical specifications for the compensating terminal.

Resistor range:	0.25 Ω to 100 Ω
Resistor tolerance:	± 10%
Resistor range:	100 Ω to 50 kΩ
Resistor tolerance	± 20%
Limited continuous resistance value:	0.75 W to 70 °C
Max. load:	100 mA
Temperature coefficient:	0 to +500 ppm/°C
Max. operating voltage:	300 V

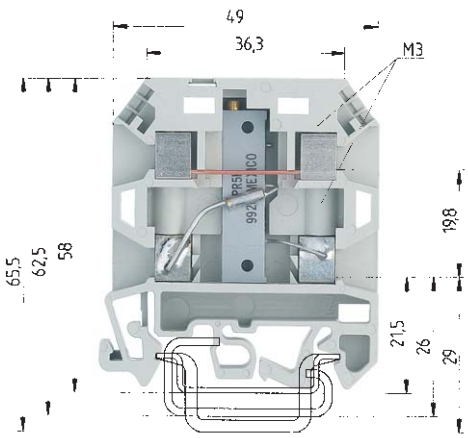

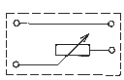

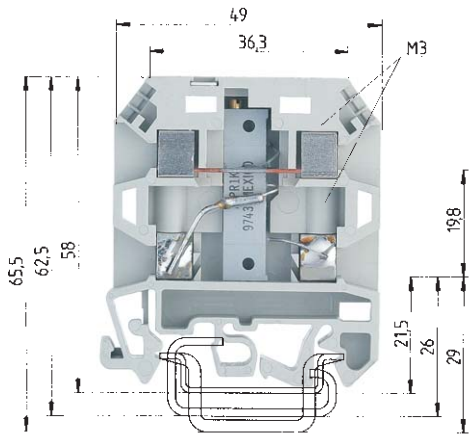

as voltage divider

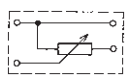

	9785 U/...				9785 U/... - SPT			
	fine stranded	solid	V	A	fine stranded	solid	V	A
EN 60 947-7-1/DIN VDE 0611 T1	0.5 – 2.5 mm²	0.5 – 2.5 mm²	see the description		0.5 – 2,5 mm²	0.5 – 2.5 mm²	see the description	
UL ratings								
CSA ratings								
Width	12 mm				12 mm			
Wire strip length				9 mm				9 mm
Approvals								

			Type	Part no.	Std. pack	Type	Part no.	Std. pack
Compensating terminal	Color: gray	10 Ω	9785 U/10 Ω	57.904.0055.0	50	9785 U/10 Ω-SPT	57.904.3955.0	50
with potentiometer		20 Ω	9785 U/20 Ω	57.904.0155.0	50	9785 U/20 Ω-SPT	57.904.4155.0	50
		50 Ω	9785 U/50 Ω	57.904.0255.0	50	9785 U/50 Ω-SPT	57.904.4255.0	50
		100 Ω	9785 U/100 Ω	57.904.0355.0	50	9785 U/100 Ω-SPT	57.904.4355.0	50
		200 Ω	9785 U/200 Ω	57.904.0455.0	50	9785 U/200 Ω-SPT	57.904.4455.0	50
		510 Ω	9785 U/500 Ω	57.904.0555.0	50	9785 U/500 Ω-SPT	57.904.4555.0	50
		1 kΩ	9785 U/1 kΩ	57.904.0655.0	50	9785 U/1 kΩ-SPT	57.904.4655.0	50
		2 kΩ	9785 U/2 kΩ	57.904.0755.0	50	9785 U/2 kΩ-SPT	57.904.4755.0	50
		5 kΩ	9785 U/5 kΩ	57.904.0855.0	50	9785 U/5 kΩ-SPT	57.904.4855.0	50
		10 kΩ	9785 U/10 kΩ	57.904.0955.0	50	9785 U/10 kΩ-SPT	57.904.4955.0	50
		20 kΩ	9785 U/20 kΩ	57.904.1055.0	50	9785 U/20 kΩ-SPT	57.904.5055.0	50
		50 kΩ	9785 U/50 kΩ	57.904.1155.0	50	9785 U/50 kΩ-SPT	57.904.5155.0	50
Diode terminal								
Accessories								
1. Mounting rail TS 35, DIN rail 7.5mm high		L = 2 m	35 x 27 x 7,5 EN 60715	98.300.0000.0	1	35 x 27 x 7,5 EN 60715	98.300.0000.0	1
Mounting rail TS 35, DIN rail 1.5mm high		L = 2 m	35 x 24 x 15 EN 60715	98.360.0000.0	1	35 x 24 x 15 EN 60715	98.360.0000.0	1
Mounting rail TS 32	G rail	L = 2 m	9006 EN 60715 G-32	98.190.0000.0	1	9006 EN 60715 G-32	98.190.0000.0	1
2. End clamp with U-foot		10 mm wide	WE 1/U	Z5.523.5753.0	100	WE 1/U	Z5.523.5753.0	100
End clamp TS 35, with screw		8 mm wide	9708/2 S 35	Z5.522.8553.0	100	9708/2 S 35	Z5.522.8553.0	100
End clamp TS 32, with screw		7.5 mm wide	9708	Z5.522.7053.0	100	9708	Z5.522.7053.0	100
3. Jumper comb								
uninsulated		2pole	VB 9786-2	07.253.0227.0	50	VB 9786-2	07.253.0227.0	50
		3pole	VB 9786-3	07.253.0327.0	50	VB 9786-3	07.253.0327.0	50
		to 6pole	VB 9786-6	07.253.0627.0	50	VB 9786-6	07.253.0627.0	50

For more accessories see pages 160-177
For marking systems see pages 178-179 and 200-202

Diode block

selos

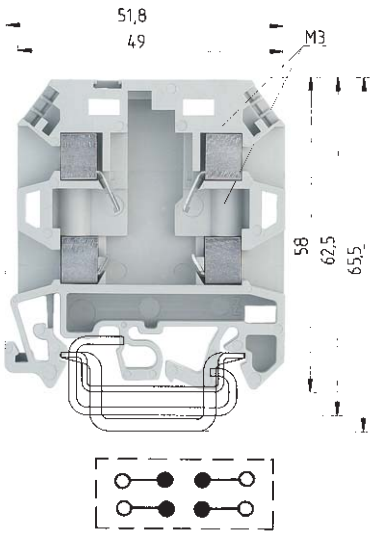

The diode terminal consists of an insulating housing with snap-on end section. It has four screw terminals with four marking points. Solder tabs inside the screw terminals are available to connect diodes or other components.

*) Current and voltage are determined by the electronic component.

Material:
Insulating housing: Polyamide 66/6, tracking resistant
Clamping body and screws: Nickel-plated copper alloy

9786 U/12

fine stranded	solid	V	A
0.5 –2.5 mm²	0.5 – 2.5 mm²	800 V/8 kV/3*)	24**
No. 22-14 AWG		300 V	6
12 mm			9 mm

Type	Part no.	Std. pack
9786 U/12	57.904.2055.0	50
VB 9786-2	07.253.0227.0	50
VB 9786-3	07.253.0327.0	50
VB 9786-6	07.253.0627.0	50

selos

Field of application:
In thermocouple measurement circuits, thermocouples are extended using compensating lines. Compensating lines are made of materials which have the same thermal emf values as the thermocouples up to 200 °C. In the thermocouple terminals, the combined metals are made up of the same materials as the compensating lines in accordance with DIN 43713 and DIN 43714 in order to ensure that no corrupting thermal electromotice forces are produced and the basic values in accordance with DIN IED 584 are maintained at the compensating line.

The thermocouple terminal consists of an insulating housing and a snap-in end section.

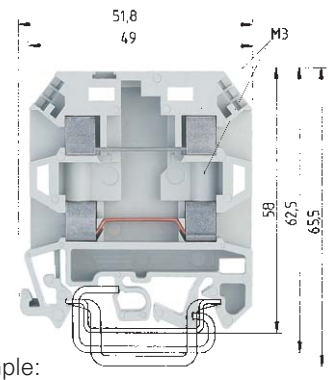

Example:
Fe/constantan Fe/CuNi 44

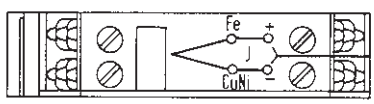

fully enclosed design
*) to the adjacent terminal block type 9786 U/...

9786 U/TSK...

		fine stranded	solid	V	A
EN 60 947-7-1/DIN VDE 0611 T1		0.5 - 2,5 mm²	0.5 - 2.5 mm²	800 V/8 kV/3*)	
UL-ratings					
CSA ratings					
Width	Wire strip length	12 mm			9 mm
Approvals					

		Type	Part no.	Std. pack
Thermocouple terminal	Typ T-Cu/CuNi 44	9786 U/TSK Cu-CuNi	57.904.7355.0	50
Thermocouple terminal	Typ E-NiCr/CuNi 44	9786 U/TSK NiCr-CuNi	57.904.7055.0	50
Thermocouple terminal	Typ J-Fe/CuNi 44	9786 U/TSK Fe-CuNi	57.904.7155.0	50
Thermocouple terminal	Typ K-NiCr/Ni	9786 U/TSK NiCr-Ni	57.904.7255.0	50
Thermocouple terminal	Typ R-PtRh 13/Pt	9786 U/TSK E-Cu-A-Cu	57.904.7455.0	50
Earth disconnect 24 - 48 V≃ with LED	Typ S-PtRh 10/Pt			
Earth disconnect 110 - 220 V ≃ with indicator lamp				
Accessories				
1. Mounting rail TS 35, DIN rail 7.5 mm high	L = 2 m	35 x 27 x 7,5 EN 60715	98.300.0000.0	1
Mounting rail TS 35, DIN rail 1.5mm high	L = 2 m	35 x 24 x 15 EN 60715	98.360.0000.0	1
Mounting rail TS 32, G rail	L = 2 m	9006 EN 60715 G-32	98.190.0000.0	1
2. End clamp with U-foot	10 mm wide	WE 1/U	Z5.523.5753.0	100
End clamp TS 35, with screw	8 mm wide	9708/2 S 35	Z5.522.8553.0	100
End clamp TS 32, with screw	7.5 mm wide	9708	Z5.522.7053.0	100
For more accessories see pages 160-177				
For marking systems see pages 178-179 and 200-202				

Ground disconnect blocks

selos

EN 60 204 part 1 / DIN VDE 0113 part 1 "Fitting industrial machines with electrical equipment".

9.4.3.1. Protection against unintentional start-up caused by earth faults.
Earth faults in control circuits may not cause an unintentional start-up, dangerous movements by the machine, or prevent the machine from stopping.

During normal operation the auxiliary circuit is connected to the funcational earth and the green (24 - 48 V) or yellow (110 - 220 V) status display is illuminated.

If a low resistance earth fault occurs, the line fuse will blow.

Once the contact separator is open, you can replace the fuse.

The illumination of the red lamp alone indicates an earth fault.

After the fault had been rectified, the green (24-48V) or yellow (110-220V) display will light up. The contacts should now be moved to the "on" position as a result of which the red lamp will go out.

The illumination of the yellow or green lamp and external display indicates that the auxiliary circuit had been reconnected to the functional earth.

selos

9760 U/8 TKE...

fine stranded	solid/stranded	V	A
1 – 10 mm²	1 – 10 mm²	24-48 V/110-220 V	30
No. 18-8 AWG		48 V/220 V	25
No. 18-8 AWG		48 V/220 V	25
17.5 mm			9 mm

Type	Part no.	Std. pack
9760 U/8 TKE 48	57.110.1655.0	25
9760 U/8 TKE 220	57.110.1555.0	25
35 x 27 x 7,5 EN 60715	98.300.0000.0	1
35 x 24 x 15 EN 60715	98.360.0000.0	1
9006 EN 60715 G-32	98.190.0000.0	1
WE 1/U	Z5.523.5753.0	100
9708/2 S 35	Z5.522.8553.0	100
9708	Z5.522.7053.0	100

Earth Disconnect terminal with LED 24 - 48 V≃

Normal operation

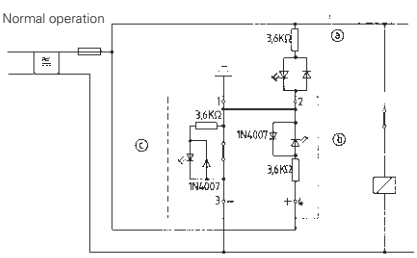

ⓐ external status display lights up
ⓑ green status display lights up
ⓒ red earth-fault indicator lights up

Ground fault

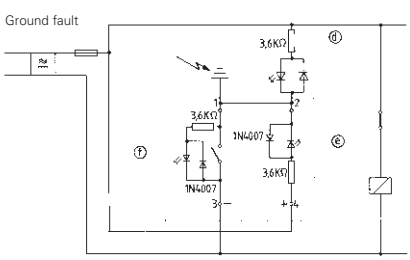

ⓓ external status display lights up
ⓔ green status display lights up
ⓕ red earth-fault indicator lights up

Earth Disconnect terminal with Neon Lamp

Normal operation

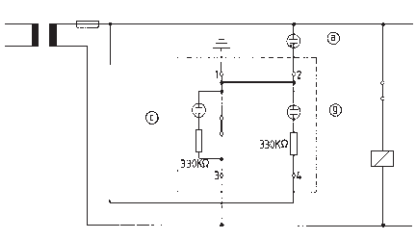

ⓖ yellow status display lights up

Ground fault

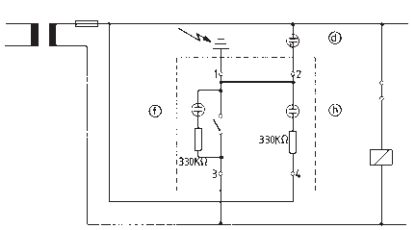

ⓗ yellow indicator light not flashing

Modular terminal block with socket for PCB pluggable connector

selos PLUG

for PC board terminal type:

Type 8113 B
Type 8313 B
Type 8113 B/VL
Type 8113 B/VR
Type 8113 B/Top

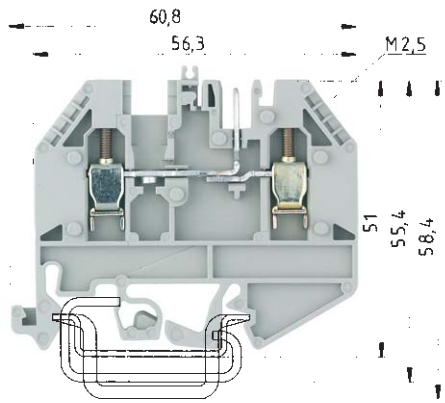

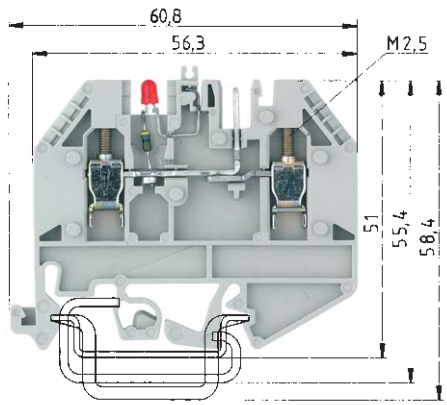

Indicator: R = 4.7 K; 0.5 W
Lamp color: red

[1] voltage rating determinted by lamp / LED

		WK 2,5 U/D/8113 S/V			WK 2,5 U/D/8113 S/V/LED 25		
		fine stranded	solid	V	fine stranded	solid	V
EN 60 947-7-1/DIN VDE 0611 T1		0.5 – 2.5 mm²	0.5 – 4 mm²	250 V/4 kV/3	0.5 – 2.5 mm²	0.5 – 4 mm²	[1]
UL-ratings	field/factory wiring	No. 22-12 AWG		300 V[1]	No. 22-12 AWG		300 V[1]
CSA ratings		No. 24-12 AWG		300 V [1]	No. 24-12 AWG		25 V due to LED/300 V[1]
Width	Wire strip length	5 mm		9 mm	5 mm		9 mm
Approvals							

		Type	Part no.	Std. pack	Type	Part no.	Std. pack
Pluggable terminal	Color: gray	WK 2,5 U/D/8113 S/V...	57.503.2155.0	50			
Pluggable terminal with LED 25 V[1]	Color: gray				WK 2,5 U/D/8113 S/V/LED 25	57.503.2255.0	50
Pluggable terminal with LED 50 V[1]	Color: gray						
Supply terminal	Color: blue						
PCB Pluggable connector type 8113							
(in ***wiecon*** section)							
Accessories							
1. Mounting rail TS 35, DIN rail, 7.5 mm high	L = 2 m	35 x 27 x 7,5 EN 60715	98.300.0000.0	1	35 x 27 x 7,5 EN 60715	98.300.0000.0	1
Mounting rail TS 35, DIN rail 15mm high	L = 2 m	35 x 24 x 15 EN 60715	98.360.0000.0	1	35 x 24 x 15 EN 60715	98.360.0000.0	1
Mounting rail TS 35, G rail	L = 2 m	9006 EN 60715 G-32	98.190.0000.0	1	9006 EN 60715 G-32	98.190.0000.0	1
2. End clamp with U-foot	10 mm wide	2/U	Z5.523.5653.0	100	WE 2/U	Z5.523.5653.0	100
End clamp TS 35 with screw	8 mm wide	9708/2 S 35	Z5.522.8553.0	100	9708/2 S 35	Z5.522.8553.0	100
End clamp TS 32 with screw	7.5 mm wide	9708	Z5.522.7053.0	100	9708	Z5.522.7053.0	100
3. End plate 2.5 mm thick	Color: gray	AP 2,5 U/D/8113 S/V	07.311.9055.0	10	AP 2,5 U/D/8113 S/V	07.311.9055.0	10
End plate 2.5 mm thick	Color: blue						
4. Spacer 2.5 mm thick	Color: gray	ZP 2,5 U/D/8113 S/V	07.311.9155.0	10	ZP 2,5 U/D/8113 S/V	07.311.9155.0	10
Spacer 2.5 mm thick	Color: blue						
use for 7.5 mm pitch pluggable connectors							
5. Cross connector with screws,	2pole	IVB WK 2,5-2	Z7.280.2227.0	10	IVB WK 2,5-2	Z7.280.2227.0	10
E-Cu, insulated	3pole	IVB WK 2,5-3	Z7.280.2327.0	10	IVB WK 2,5-3	Z7.280.2327.0	10
	12pole	IVB WK 2,5-12	Z7.280.3227.0	10	IVB WK 2,5-12	Z7.280.3227.0	10
6. LED bus bar, tin-plated brass	L = 0.4 m					05.561.4125.0	1
7. Cover strip for LED (transparent)		AD VB 5/10 P	04.342.3556.8	10	AD VB 5/10 P	04.342.3556.8	10
8. Single cover f. cross conn. with mark.facility		AD VB 2,5 GELB	04.326.2053.8	10	AD VB 2,5 GELB	04.326.2053.8	10
9. Cover stripfor PCB terminal	24pole		04.343.9056.8	10		04.343.9056.8	10
with warning symbol	24pole		04.343.9156.8	10		04.343.9156.8	10
10. Snap-in partition		TS 2,5 GELB	07.311.2053.8	10	TS 2,5 GELB	07.311.2053.8	10
11. Coding strip			05.561.0053.0	100		05.561.0053.0	100
12. Locking piece	10pole						
For marking systems see pages 178-179 and 200-202							

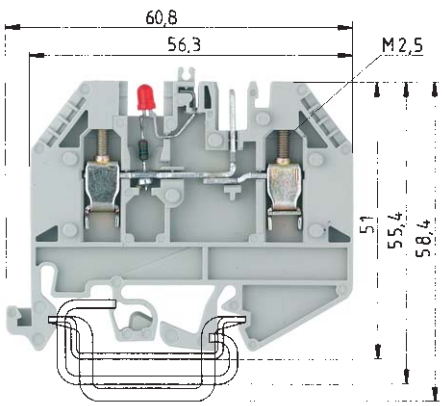

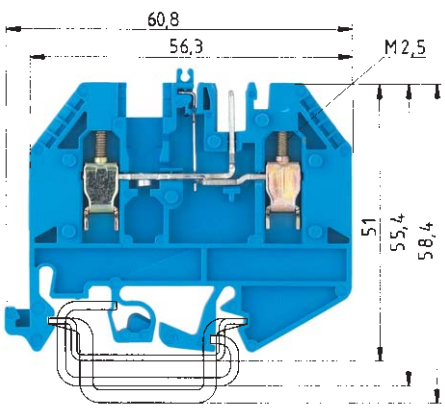

Indicator: R = 10 K; 0.5 W
Lamp color: red

[1] voltage rating determinted by lamp / LED

WK 2,5 U/D/8113 S/V/LED 50

fine stranded	solid	V	A
0.5 – 2.5 mm²	0.5 – 4 mm²	[1]	12
No. 22-12 AWG		300 V[1]	15
No. 24-12 AWG		50 V due to LED/300 V[1]	15
5 mm			9 mm

WK 2,5 U/D/8113 S/V/VK

fine stranded	solid	V	A
0.5 – 2.5 mm²	0.5 – 4 mm²	250 V/4 kV/3	12
No. 22-12 AWG		300 V	15
No. 24-12 AWG		300 V	15
5 mm			9 mm

Type	Part no.	Std. pack	Type	Part no.	Std. pack
WK 2,5 U/D/8113 S/V/LED 50	57.503.2355.0	50			
			WK 2,5 U/D/8113 S/V/VK	57.503.2555.6	50
35 x 27 x 7,5 EN 60715	98.300.0000.0	1	35 x 27 x 7,5 EN 60715	98.300.0000.0	1
35 x 24 x 15 EN 60715	98.360.0000.0	1	35 x 24 x 15 EN 60715	98.360.0000.0	1
9006 EN 60715 G-32	98.190.0000.0	1	9006 EN 60715 G-32	98.190.0000.0	1
WE 2/U	Z5.523.5653.0	100	WE 2/U	Z5.523.5653.0	100
9708/2 S 35	Z5.522.8553.0	100	9708/2 S 35	Z5.522.8553.0	100
9708	Z5.522.7053.0	100	9708	Z5.522.7053.0	100
AP 2,5 U/D/8113 S/V	07.311.9055.0	10	AP 2,5 U/D/8113 S/V	07.311.9055.0	10
ZP 2,5 U/D/8113 S/V	07.311.9155.0	10	ZP 2,5 U/D/8113 S/V	07.311.9155.0	10
IVB WK 2,5-2	Z7.280.2227.0	10	IVB WK 2,5-2	Z7.280.2227.0	10
IVB WK 2,5-3	Z7.280.2327.0	10	IVB WK 2,5-3	Z7.280.2327.0	10
IVB WK 2,5-12	Z7.280.3227.0	10	IVB WK 2,5-12	Z7.280.3227.0	10
	05.561.4125.0	1		05.561.4125.0	1
AD VB 5/10 P	04.342.3556.8	10	AD VB 5/10 P	04.342.3556.8	10
AD VB 2,5 GELB	04.326.2053.8	10	AD VB 2,5 GELB	04.326.2053.8	10
	04.343.9056.8	10		04.343.9056.8	10
	04.343.9156.8	10		04.343.9156.8	10
TS 2,5 GELB	07.311.2053.8	10	TS 2,5 GELB	07.311.2053.8	10
	05.561.0053.0	100		05.561.0053.0	100

Modular terminal block with socket for PCB pluggable connector

selos PLUG

for PCB terminal types:

Type 8113 B
Type 8313 B
Type 8113 B/VL
Type 8113 B/VR
Type 8113 B/Top

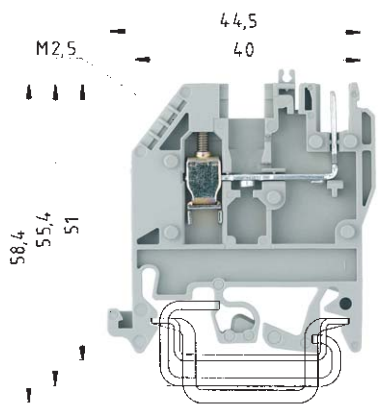

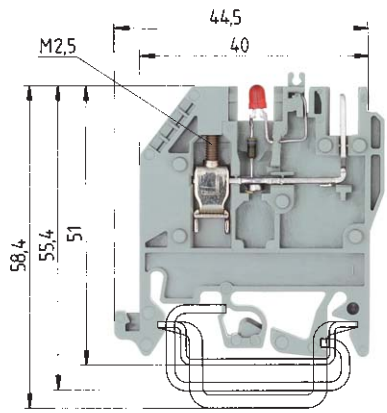

Indicator: R = 4.7 K; 0.5 W
Lamp color: red

[1] voltage rating determinted by lamp / LED

		WK 2,5 U/8113 S/V			WK 2,5 U/8113 S/V/LED 25		
		fine stranded	solid	V	A	fine stranded	solid	V	A
DIN VDE 0110		0.5 – 2.5 mm²	0.5 – 4 mm²	250 V/4 kV/3	12	0.5 – 2.5 mm²	0.5 – 4 mm²	[1]	12
UL-ratings	field/factory wiring	No. 22-12 AWG		300 V	15	No. 22-12 AWG		300 V[1]	15
CSA ratings		No. 24-12 AWG		300 V	15	No. 24-12 AWG		25 V due to LED/300 V[1]	15
Width	Wire strip length	5 mm			9 mm	5 mm			9 mm
Approvals									

		Type	Part no.	Std. pack	Type	Part no.	Std. pack
Pluggable terminal	Color: gray	WK 2,5 U/8113 S/V...	57.503.2655.0	50			
Pluggable terminal with LED 25 V[1]	Color: gray				WK 2,5 U/8113 S/V/LED 25	57.503.2755.0	50
Pluggable terminal with LED 50 V[1]	Color: gray						
Supply terminal	Color: blue						
Pluggable terminal with pluggable connection for PCB							
PCB Pluggable connector type 8113							
(in **wiecon** section)							
Accessories							
1. Mounting rail TS 35, DIN rail, 7.5 mm high	L = 2 m	35 x 27 x 7,5 EN 60715	98.300.0000.0	1	35 x 27 x 7,5 EN 60715	98.300.0000.0	1
Mounting rail TS 35, DIN rail 15mm high	L = 2 m	35 x 24 x 15 EN 60715	98.360.0000.0	1	35 x 24 x 15 EN 60715	98.360.0000.0	1
Mounting rail TS 35, G rail	L = 2 m	9006 EN 60715 G-32	98.190.0000.0	1	9006 EN 60715 G-32	98.190.0000.0	1
2. End clamp with U-foot	10 mm wide	2/U	Z5.523.5653.0	100	WE 2/U	Z5.523.5653.0	100
End clamp TS 35 with screw	8 mm wide	9708/2 S 35	Z5.522.8553.0	100	9708/2 S 35	Z5.522.8553.0	100
End clamp TS 32 with screw	7.5 mm wide	9708	Z5.522.7053.0	100	9708	Z5.522.7053.0	100
3. End plate for right side, 2.5 mm thick	Color: gray	AP 2,5 U/8113 S/V	07.312.1555.0	10	AP 2,5 U/8113 S/V	07.312.1555.0	10
End plate for left side, 2.5 mm thick	Color: gray	AP 2,5 U/8113	07.312.4655.0	10	AP 2,5 U/8113	07.312.4655.0	10
End plate 2.5 mm thick	Color: blue						
4. Spacer, right side, 2.5 mm thick	Color: gray	ZP 2,5 U/8113 S/V	07.312.1655.0	10	ZP 2,5 U/8113 S/V	07.312.1655.0	10
Spacer 2.5 mm thick	Color: blue						
use for 7.5 mm pitch pluggable connectors							
5. Cross connector with screws,	2pole	IVB WK 2,5-2	Z7.280.2227.0	10			
E-Cu, insulated	3pole	IVB WK 2,5-3	Z7.280.2327.0	10			
	12pole	IVB WK 2,5-12	Z7.280.3227.0	10			
6. LED bus bar, tin-plated brass	L = 0.4 m					05.561.4125.0	1
7. Cover strip for LED (transparent)							
8. Single cover f. cross conn. with marking facility		AD VB 2,5 GELB	04.326.2053.8	10	AD VB 2,5 GELB	04.326.2053.8	10
9. Cover strip for PCB terminal	24pole		04.343.9056.8	10		04.343.9056.8	10
with warning symbol	24pole		04.343.9156.8	10		04.343.9156.8	10
10. Snap-in partition plate		TS 2,5 GELB	07.311.2053.8	10	TS 2,5 GELB	07.311.2053.8	10
11. Coding strip			05.561.0053.0	100		05.561.0053.0	100
12. Locking piece	10pole						

For marking systems see pages 178-179 and 200-202

selos

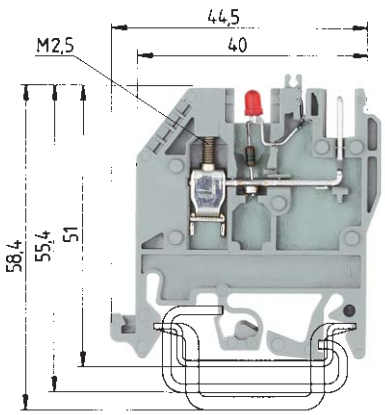

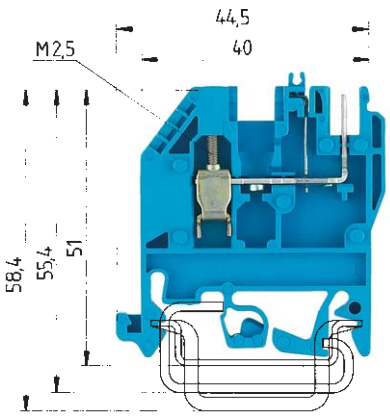

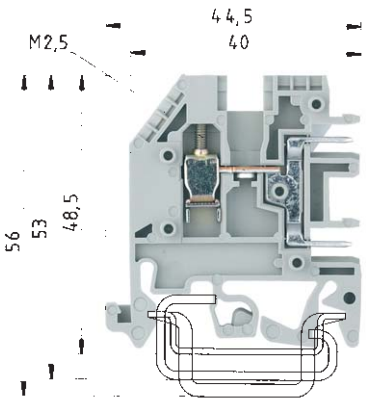

Indicator: R = 10 K; 0.5 W
Lamp color: red

[1] voltage rating determinted by lamp / LED

WK 2,5 U/8113 S/V/LED 50

fine stranded	solid	V	A
0.5 – 2.5 mm²	0.5 – 4 mm²	[1]	12
No. 22-12 AWG		300 V[1]	15
No. 24-12 AWG		50 V due to LED/300 V[1]	15
5 mm			9 mm

WK 2,5 U/8113 S/V/VK

fine stranded	solid	V	A
0.5 – 2.5 mm²	0.5 – 4 mm²	250 V/4 kV/3	12
No. 22-12 AWG		300 V	15
No. 24-12 AWG		300 V	15
5 mm			9 mm

WK 2,5 U/D/8113 S/V/VK

fine stranded	solid	V	A
0,5 – 2,5 mm²	0,5 – 4 mm²	250 V/4 kV/3	12
No. 22-12 AWG		300 V	20
No. 24-12 AWG		300 V	15
5 mm			9 mm

Type	Part no.	Std. pack	Type	Part no.	Std. pack	Type	Part no.	Std. pack
WK 2,5 U/8113 S/V/LED 50	57.503.2855.0	50						
			WK 2,5 U/8113 S/V/VK	57.503.3055.6	50			
						WK 2,5 U/8113 S/H	57.503.2055.0	100
35 x 27 x 7,5 EN 60715	98.300.0000.0	1	35 x 27 x 7,5 EN 60715	98.300.0000.0	1	35 x 27 x 7,5 EN 60715	98.300.0000.0	1
35 x 24 x 15 EN 60715	98.360.0000.0	1	35 x 24 x 15 EN 60715	98.360.0000.0	1	35 x 24 x 15 EN 60715	98.360.0000.0	1
9006 EN 60715 G-32	98.190.0000.0	1	9006 EN 60715 G-32	98.190.0000.0	1	9006 EN 60715 G-32	98.190.0000.0	1
WE 2/U	Z5.523.5653.0	100	WE 2/U	Z5.523.5653.0	100	WE 2/U	Z5.523.5653.0	100
9708/2 S 35	Z5.522.8553.0	100	9708/2 S 35	Z5.522.8553.0	100	9708/2 S 35	Z5.522.8553.0	100
9708	Z5.522.7053.0	100	9708	Z5.522.7053.0	100	9708	Z5.522.7053.0	100
AP 2,5 U/8113 S/V	07.312.1555.0	10						
AP 2,5 U/8113	07.312.4655.0	10	AP 2,5 U/8113	07.312.4655.0	10			
			AP 2,5 U/8113 S/V BL	07.312.1555.6	10	AP 2,5 U/8113 S/H***[)]	07.311.9853.0	
ZP 2,5 U/8113 S/V	07.312.1655.0	10	ZP 2,5 U/8113 S/V	07.312.1655.0	10			
			ZP 2,5 U/8113 S/V BL	07.312.1655.6	10			
			IVB WK 2,5-2	Z7.280.2227.0	10	IVB WK 2,5-2	Z7.280.2227.0	10
			IVB WK 2,5-3	Z7.280.2327.0	10	IVB WK 2,5-3	Z7.280.2327.0	10
			IVB WK 2,5-12	Z7.280.3227.0	10	IVB WK 2,5-12	Z7.280.3227.0	10
	05.561.4125.0	1						
AD VB 2,5 GELB	04.326.2053.8	10	AD VB 2,5 GELB	04.326.2053.8	10	AD VB 2,5 GELB	04.326.2053.8	10
	04.343.9056.8	10		04.343.9056.8	10			
	04.343.9156.8	10		04.343.9156.8	10			
TS 2,5 GELB	07.311.2053.8	10	TS 2,5 GELB	07.311.2053.8	10	TS 2,5 GELB	07.311.2053.8	10
	05.561.0053.0	100		05.561.0053.0	100		05.584.0053.0	100
							05.576.5853.0	25

Feed-through terminal blocks with screw/push-on connection

selos PLUG

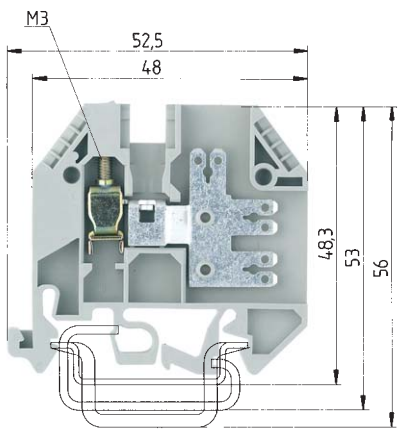

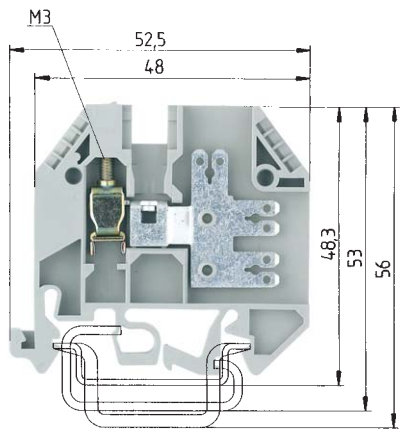

Push-on connectors 2.8 x 0.8 accord. to DIN 46247
Push-on connectors 6.3 x 0.8 accord. to DIN 46247

Push-on connectors 2.8 x 0.8 accord. to DIN 46247

		WK 4 3-6 S 1 K/U				WK 4 5 S 2,8 1 K/U			
Nominal data when using insulating housing		fine stranded	solid	V	A	fine stranded	solid	V	A
EN 60 947-7-1, EN 61 210		0.5 – 4 mm²	0.5 – 6 mm²	800 V/8 kV/3	20*)	0.5 – 4 mm²	0.5 – 6 mm²	800 V/8 kV/3	20*)
UL-ratings	field/factory wiring	No. 22-12 AWG		300 V	10	No. 22-12 AWG		300 V	10
CSA ratings		No. 22-12 AWG		300 V	10	No. 22-12 AWG		300 V	10
Width	Wire strip length	6 mm			9 mm	6 mm			9 mm
Approvals									

		Type	Part no.	Std. pack	Type	Part no.	Std. pack
Terminal block with screw and							
push-on connectors	Color: gray						
Push-on with 6 connectors 2.8 x 0.8		WK 4 3-6 S 1 K/U	57.504.3755.0	100			
Push-on with 5 connectors 2.8 x 0.8					WK 4 5 S 2,8 1 K/U	57.504.3855.0	100
Distribution terminal	Color: gray						
Push-on with 10 connectors							
Accessories							
1. Mounting rail TS 35, DIN rail, 7.5 mm high	L = 2 m	35 x 27 x 7,5 EN 60715	98.300.0000.0	1	35 x 27 x 7,5 EN 60715	98.300.0000.0	1
Mounting rail TS 35, DIN rail 15mm high	L = 2 m	35 x 24 x 15 EN 60715	98.360.0000.0	1	35 x 24 x 15 EN 60715	98.360.0000.0	1
Mounting rail TS 35, G rail	L = 2 m	9006 EN 60715 G-32	98.190.0000.0	1	9006 EN 60715 G-32	98.190.0000.0	1
2. End clamp with U-foot	10 mm wide	2/U	Z5.523.5653.0	100	WE 2/U	Z5.523.5653.0	100
End clamp TS 35 with screw	8 mm wide	9708/2 S 35	Z5.522.8553.0	100	9708/2 S 35	Z5.522.8553.0	100
End clamp TS 32 with screw	7.5 mm wide	9708	Z5.522.7053.0	100	9708	Z5.522.7053.0	100
3. End plate, 1.5 mm thick	Color: gray	AP4 3 S 1 K	07.311.3855.0	10	AP4 3 S 1 K	07.311.3855.0	10
	Color: blue						
4. Insulating housing for push-on connector	yellow						
for H0. V-K 1.5 mm²			05.592.7553.0	2000		05.592.7553.0	2000
for H0. V-K 2.5 mm²			05.592.7653.0	2000		05.592.7653.0	2000
5. Cross connector with screws, E-Cu,							
insulated	2pole	IVB WK 4-2	Z7.281.1227.0	10	IVB WK 4-2	Z7.281.1227.0	10
	3pole	IVB WK 4-3	Z7.281.1327.0	10	IVB WK 4-3	Z7.281.1327.0	10
	to 12pole	IVB WK 4-12	Z7.281.2227.0	10	IVB WK 4-12	Z7.281.2227.0	10
6. Jumper rail, tin-plated brass	L = 0.4 m						
7. Cover strip for LED (transparent)							
8. Single cover f. cross conn. with marking facility		AD VB 4 GELB	04.326.2153.8	10	AD VB 4 GELB	04.326.2153.8	10
9. Cover strip for cross conn. over 10 blocks		AD VB 6/10 GELB	04.342.0656.8	10	AD VB 6/10 GELB	04.342.0656.8	10
10. Partition plate		TS 4 GELB	07.311.2153.8	10	TS 4 GELB	07.311.2153.8	10
11. Coding strip							
For marking systems see pages 178-179 and 200-202					*) Current carrying capability accord. to DIN 46249		

selos

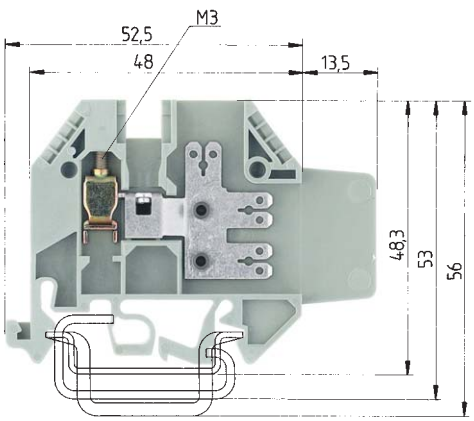

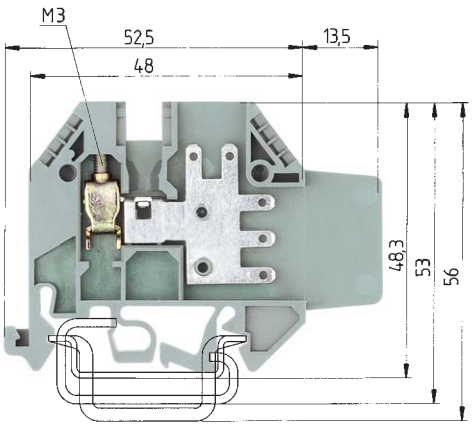

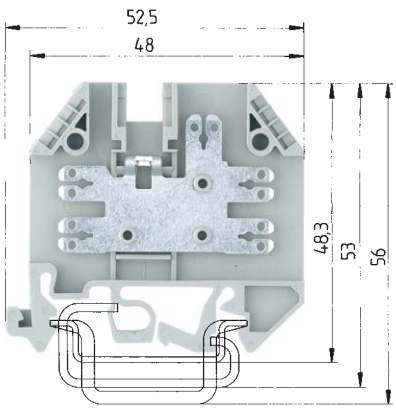

Push-on connectors 2.8 x 0.8 accord. to DIN 46247
Push-on connectors 6.3 x 0.8 accord. to DIN 46247

WK 4-3-6 S 1 K/IW/U

fine stranded	solid	V	A
0.5 – 4 mm²	0.5 – 6 mm²	800 V/8 kV/3	20*)
No. 22-12 AWG		600 V	10
No. 22-12 AWG		300 V	10
6 mm			9 mm

Type	Part no.	Std. pack
WK 4 3-6 S 1 K/IW/U	57.504.2755.0	100
35 x 27 x 7,5 EN 60715	98.300.0000.0	1
35 x 24 x 15 EN 60715	98.360.0000.0	1
9006 EN 60715 G-32	98.190.0000.0	1
WE 2/U	Z5.523.5653.0	100
9708/2 S 35	Z5.522.8553.0	100
9708	Z5.522.7053.0	100
AP4 3 S 1 K	07.311.3855.0	10
	05.592.7553.0	2000
	05.592.7653.0	2000
IVB WK 4-2	Z7.281.1227.0	10
IVB WK 4-3	Z7.281.1327.0	10
IVB WK 4-12	Z7.281.2227.0	10
AD VB 4 GELB	04.326.2153.8	10
AD VB 6/10 GELB	04.342.0656.8	10
TS 4 GELB	07.311.2153.8	10

Push-on connectors 2.8 x 0.8 accord. to DIN 46247

WK 4-5 S 2,8 1 K/IW/U

fine stranded	solid	V	A
0.5 – 4 mm²	0.5 – 6 mm²	800 V/8 kV/3	20*)
No. 22-12 AWG		600 V	10
No. 22-12 AWG		300 V	10
6 mm			9 mm

Type	Part no.	Std. pack
WK 4 5 S 2,8 1 K/IW/U	57.504.2855.0	100
35 x 27 x 7,5 EN 60715	98.300.0000.0	1
35 x 24 x 15 EN 60715	98.360.0000.0	1
9006 EN 60715 G-32	98.190.0000.0	1
WE 2/U	Z5.523.5653.0	100
9708/2 S 35	Z5.522.8553.0	100
9708	Z5.522.7053.0	100
AP4 3 S 1 K	07.311.3855.0	10
	05.592.7553.0	2000
	05.592.7653.0	2000
IVB WK 4-2	Z7.281.1227.0	10
IVB WK 4-3	Z7.281.1327.0	10
IVB WK 4-12	Z7.281.2227.0	10
AD VB 4 GELB	04.326.2153.8	10
AD VB 6/10 GELB	04.342.0656.8	10
TS 4 GELB	07.311.2153.8	10

Push-on connectors 2.8 x 0.8 accord. to DIN 46247
Push-on connectors 6.3 x 0.8 accord. to DIN 46247

WK/5-10 S/U

fine stranded	solid	V	A
		800 V/8 kV/3	20*)
		300 V	10
No. 22-12 AWG		300 V	10
6 mm			

Type	Part no.	Std. pack
WK/5-10 S/U	57.504.3655.0	100
35 x 27 x 7,5 EN 60715	98.300.0000.0	1
35 x 24 x 15 EN 60715	98.360.0000.0	1
9006 EN 60715 G-32	98.190.0000.0	1
WE 2/U	Z5.523.5653.0	100
9708/2 S 35	Z5.522.8553.0	100
9708	Z5.522.7053.0	100
AP 5 S	07.311.4655.0	10
	05.592.7553.0	2000
	05.592.7653.0	2000
IVB WKI 4-2	Z7.271.4227.0	10
IVB WKI 4-3	Z7.271.4327.0	10
IVB WKI 4-12	Z7.271.5227.0	10
AD VB 4 GELB	04.326.2153.8	10
AD VB 6/10 GELB	04.342.0656.8	10
TS 4 GELB	07.311.2153.8	10

Distribution terminals for push-on connectors

selos PLUG

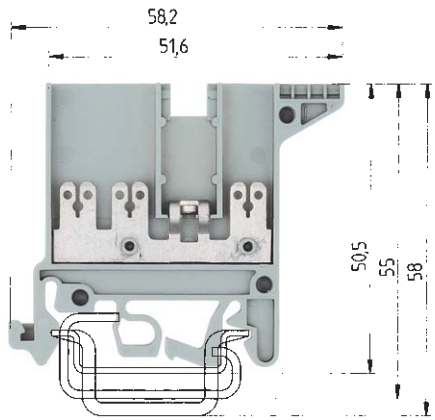

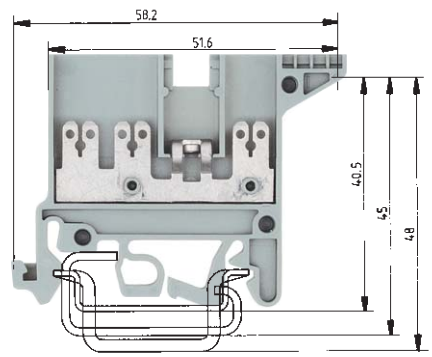

Current carrying capability in accordance with DIN 46249
Push-on connector
2.8 10 A
6.3 20 A

Current carrying capability in accordance with EN 60 947-7-1, EN 61 210
UL-ratings field/factory wiring
CSA ratings
Width Wire strip length
Approvals

Push-on connectors 2.8 x 0.8 accord. to DIN 46247
Push-on connectors 6.3 x 0.8 accord. to DIN 46247

WK/3-6 S/IW/U

fine stranded	solid	V	A
0.5 – 4 mm²	0.5 – 6 mm²	800 V/8 kV/3	20
		600 V	10
No. 22-12 AWG		300 V	10
6 mm			

Push-on connectors 2.8 x 0.8 accord. to DIN 46247
Push-on connectors 6.3 x 0.8 accord. to DIN 46247

WK/3-6 S/U

fine stranded	solid	V	A
		800 V/8 kV/3	20
		300 V	10
No. 24-12 AWG		300 V	10
6 mm			

		Type	Part no.	Std. pack	Type	Part no.	Std. pack
Distribution terminals							
with 6 push-on connectors 2.8 x 0.8	Color: gray	WK/3-6 S/IW/U	57.504.6755.0	100	WK/3-6 S/U	57.504.6655.0	100
Rapid mounting feed-through block							
Accessories							
1. Mounting rail TS 35, DIN rail, 7.5 mm high	L = 2 m	35 x 27 x 7,5 EN 60715	98.300.0000.0	1	35 x 27 x 7,5 EN 60715	98.300.0000.0	1
Mounting rail TS 35, DIN rail 15mm high	L = 2 m	35 x 24 x 15 EN 60715	98.360.0000.0	1	35 x 24 x 15 EN 60715	98.360.0000.0	1
Mounting rail TS 35, G rail	L = 2 m	9006 EN 60715 G-32	98.190.0000.0	1	9006 EN 60715 G-32	98.190.0000.0	1
2. End clamp with U-foot	10 mm wide	2/U	Z5.523.5653.0	100	WE 2/U	Z5.523.5653.0	100
End clamp TS 35 with screw	8 mm wide	9708/2 S 35	Z5.522.8553.0	100	9708/2 S 35	Z5.522.8553.0	100
End clamp TS 32 with screw	7.5 mm wide	9708	Z5.522.7053.0	100	9708	Z5.522.7053.0	100
3. End plate, 2.5 mm thick	Color: gray	AP 3 S/IW	07.311.4555.0	50	AP 3 S	07.311.4455.0	50
End plate 2.5 mm thick	Color: blue						
4. Insulating sleeve for tab connector	yellow						
for H0. V-K 1.5 mm²			05.592.7553.0	2000		05.592.7553.0	2000
for H0. V-K 2.5 mm²			05.592.7653.0	2000		05.592.7653.0	2000
5. Cross connector with screws, E-Cu,							
uninsulated	2pole	VB WK/...S/IW/U-2	Z7.281.3227.0	10	9703/6-2	Z7.211.0227.0	50
	3pole	VB WK/...S/IW/U-3	Z7.281.3327.0	10	9703/6-3	Z7.211.0327.0	50
	to 6pole	VB WK/...S/IW/U-6	Z7.281.3627.0	10	9703/6-6	Z7.211.0627.0	50
6. Jumper rail, tin-plated brass	L = 0.4 m						
7. Cover strip for LED (transparent)							
8. Single cover f. cross conn. with marking facility		AD VB 4 GELB	04.326.2153.8	10	AD VB 4 GELB	04.326.2153.8	10
9. Cover strip for cross conn. over 10 blocks		AD VB 6-10 GELB	04.342.0653.8		AD VB 6-10 GELB	04.342.0653.8	
Cover strip with warning symbol over 4 blocks							
10. Snap-on partition plate		TS 4 GELB	07.311.2153.8	10	TS 4 GELB	07.311.2153.8	10
11. Coding piece							
For marking systems see pages 178-179 and 200-202							

selos

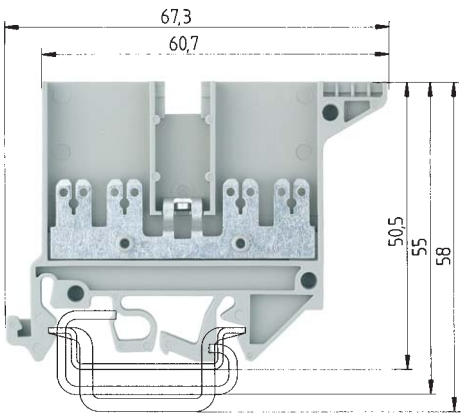

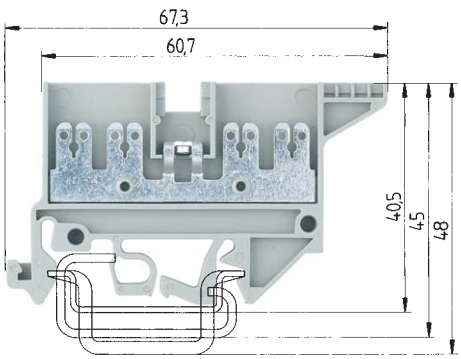

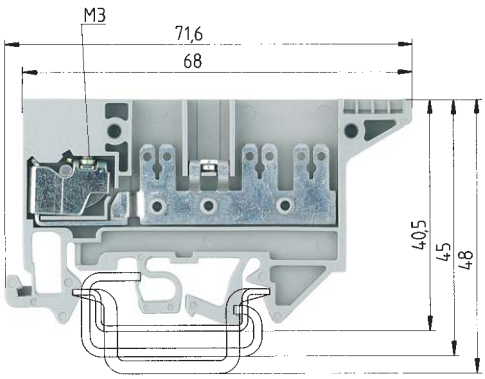

Push-on connectors 2.8 x 0.8 accord. to DIN 46247
Push-on connectors 6.3 x 0.8 accord. to DIN 46247

WK/4-8 S/IW/U

		V	A
fine stranded	solid		
		800 V/8 kV/3	20
		600 V	10
No. 22-12 AWG		300 V	10
6 mm			

Type	Part no.	Std. pack
WK/4-8 S/IW/U	57.504.6355.0	100
35 x 27 x 7,5 EN 60715	98.300.0000.0	1
35 x 24 x 15 EN 60715	98.360.0000.0	1
9006 EN 60715 G-32	98.190.0000.0	1
WE 2/U	Z5.523.5653.0	100
9708/2 S 35	Z5.522.8553.0	100
9708	Z5.522.7053.0	100
AP 4 S/IW	07.311.4355.0	50
	05.592.7553.0	2000
	05.592.7653.0	2000
VB WK/...S/IW/U-2	Z7.281.3227.0	10
VB WK/...S/IW/U-3	Z7.281.3327.0	10
VB WK/...S/IW/U-6	Z7.281.3627.0	10
AD VB 4 GELB	04.326.2153.8	10
AD VB 6-10 GELB	04.342.0653.8	
TS 4 GELB	07.311.2153.8	10

Push-on connectors 2.8 x 0.8 accord. to DIN 46247
Push-on connectors 6.3 x 0.8 accord. to DIN 46247

WK/4-8 S/U

		V	A
fine stranded	solid		
		800 V/8 kV/3	20
No. 22-12 AWG		300 V	10
6 mm			

Type	Part no.	Std. pack
WK/4-8 S/U	57.504.6255.0	100
35 x 27 x 7,5 EN 60715	98.300.0000.0	1
35 x 24 x 15 EN 60715	98.360.0000.0	1
9006 EN 60715 G-32	98.190.0000.0	1
WE 2/U	Z5.523.5653.0	100
9708/2 S 35	Z5.522.8553.0	100
9708	Z5.522.7053.0	100
AP 4 S	07.311.4255.0	10
	05.592.7553.0	2000
	05.592.7653.0	2000
9703/6-2	Z7.211.0227.0	50
9703/6-3	Z7.211.0327.0	50
9703/6-6	Z7.211.0627.0	50
AD VB 4 GELB	04.326.2153.8	10
AD VB 6-10 GELB	04.342.0653.8	
TS 4 GELB	07.311.2153.8	10

Push-on connectors 2.8 x 0.8 accord. to DIN 46247
Push-on connectors 6.3 x 0.8 accord. to DIN 46247

WK/3-6 S KO/U

		V	A
fine stranded	solid		
0.5 – 4 mm^2		690 V/8 kV/3	20
No. 22-12 AWG		300 V	10
No. 22-12 AWG		300 V	10
6 mm			9 mm

Type	Part no.	Std. pack
WK/3-6 S KO/U	57.504.7355.0	
35 x 27 x 7,5 EN 60715	98.300.0000.0	1
35 x 24 x 15 EN 60715	98.360.0000.0	1
9006 EN 60715 G-32	98.190.0000.0	1
WE 2/U	Z5.523.5653.0	100
9708/2 S 35	Z5.522.8553.0	100
9708	Z5.522.7053.0	100
9701 A/6 1 S KO TP 2	07.310.5855.0	50
	05.592.7553.0	2000
	05.592.7653.0	2000
2072/2	Z7.220.0227.0	50
2072/2	Z7.220.0227.0	50
2072/6	Z7.220.0627.0	50

Feed-through blocks with solder connection

selos

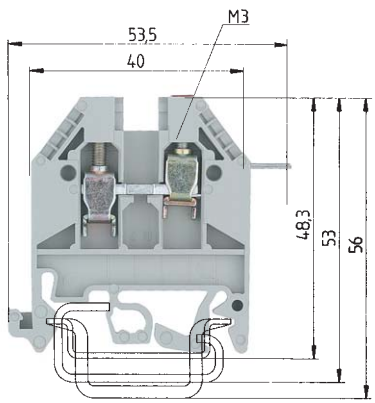

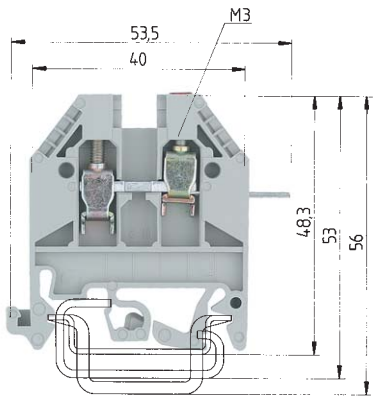

terminals WK 4/UF1 and WK 4/UF2 should be mounted alternately in order to observe the creepages and clearances required for the specific rated voltages.

		WK 4/U F1				WK 4/U F2			
		fine stranded	solid	V	A	fine stranded	solid	V	A
EN 60 947-7-1/DIN VDE 0611 T1		0.5 - 4 mm²	0.5 - 6 mm²	400 V/6 kV/3	32	0.5 - 4 mm²	0.5 - 6 mm²	400 V/6 kV/3	32
UL-ratings		No. 22-10	AWG	300 V	30	No. 22-10	AWG	300 V	30
CSA ratings		No. 22-10	AWG	300 V	20	No. 22-10	AWG	300 V	20
Width	Wire strip length	6 mm			9 mm	6 mm			9 mm
Approvals									

		Type	Part no.	Std. pack	Type	Part no.	Std. pack
Feed through terminal		WK 4/U F1	57.504.1055.0	100	WK 4/U F2	57.504.1155.0	100
Color: gray							
same dimensions as WK4							
Accessories		35 x 27 x 7,5 EN 60715	98.300.0000.0	1	35 x 27 x 7,5 EN 60715	98.300.0000.0	1
1. Mounting rail TS 35, DIN rail 7.5mm high	L = 2 m	35 x 24 x 15 EN 60715	98.360.0000.0	1	35 x 24 x 15 EN 60715	98.360.0000.0	1
Mounting rail TS 35, DIN rail 1.5mm high	L = 2 m	9006 EN 60715 G-32	98.190.0000.0	1	9006 EN 60715 G-32	98.190.0000.0	1
Mounting rail TS 32 G rail	L = 2 m	WE 1/U	Z5.523.5753.0	100	WE 1/U	Z5.523.5753.0	100
2. End clamp with U-foot	10 mm wide	9708/2 S 35	Z5.522.8553.0	100	9708/2 S 35	Z5.522.8553.0	100
End clamp TS 35, with screw	8 mm wide	9708	Z5.522.7053.0	100	9708	Z5.522.7053.0	100
End clamp TS 32, with screw	7.5 mm wide	AP 2,5-4	07.311.0155.0	10	AP 2,5-4	07.311.0155.0	10
3. End plate, 1.5 mm thick	Color: gray						
		TW 2,5-4	07.311.1155.0	10	TW 2,5-4	07.311.1155.0	10
4. Partition, 1.5 mm thick							
5. Cross connector with screws, E-Cu		IVB WK 4-2	Z7.281.1227.0	10	IVB WK 4-2	Z7.281.1227.0	10
insulated	2pole	IVB WK 4-3	Z7.281.1327.0	10	IVB WK 4-3	Z7.281.1327.0	10
	3pole	IVB WK 4-12	Z7.281.2227.0	10	IVB WK 4-12	Z7.281.2227.0	10
	to 12pole						
6. Cover for jumper bar with marking capability		AD VB 4 GELB	04.326.2153.8	10	AD VB 4 GELB	04.326.2153.8	10
7. Partition plate		TS 4 GELB	07.311.2153.8	10	TS 4 GELB	07.311.2153.8	10
For marking systems see pages 178-179 and 200-202							

selos

Micro modular feed through blocks type *WKM*

selos MINI

The terminal blocks of series WKM 2,5 F1/15 and WKM 2,5 F2/15 must be mounted alternately in order to maintain the required air and creepage distances for the indicated rated voltage.

*) Ratings to adjacent feed-through block of same series and size

) For the current carrying capability of the mounting rail see section ***facts* & DATA

When using switchable connecting links you have to insert a partition which reduces the rated voltage to 400 V/6 kV/3

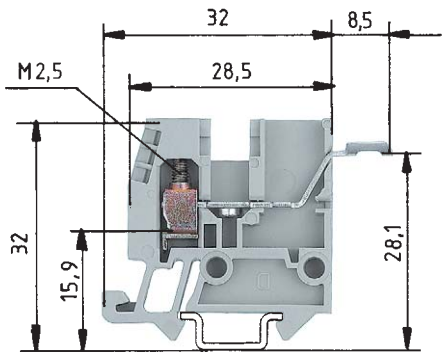

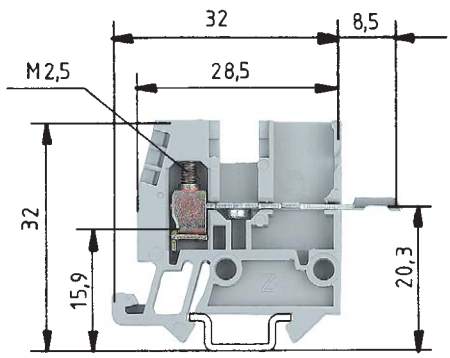

	WKM 2,5 F1/15				WKM 2,5 F2/15			
	fine stranded	solid	V	A	fine stranded	solid	V	A
EN 60 947-7-2/DIN VDE 0611 T3	0.5 – 2.5 mm²	0.5 – 4 mm²	500 V/6 kV/3	24	0.5 – 2.5 mm²	0.5 – 4 mm²	500 V/6 kV/3	24
UL-ratings	field/factory wiring							
CSA ratings								
Width	Wire strip length		5 mm	9 mm			5 mm	9 mm
Approvals								

	Type	Part no.	Std. pack	Type	Part no.	Std. pack
Feed-through blocks with solder connection Color: gray	WKM 2,5 F1/15	55.503.1253.0	100	WKM 2,5 F2/15	55.503.1353.0	100
Feed-through block Color: gray						
Feed-through block Color: blue						
Ground block Color: green/yellow						
Accessories						
1. Mounting rail 15, DIN rail 5.5 mm high L = 2 m	9021/15 x 5,5 EN 60715	98.090.0015.0	10	9021/15 x 5,5 EN 60715	98.090.0015.0	10
2. End clamp, Polyamide 7.5 mm wide	9208 S 15	Z5.522.7553.0	100	9208 S 15	Z5.522.7553.0	100
3. End plate 1,5 mm thick Color: gray	APM 2,5 F./15	07.311.0653.0	10	APM 2,5 F./15	07.311.0653.0	10
Color: blue						
4. Partition 1.5 mm thick Color: gray						
Color: blue						
5. Cross connector with screws, E-Cu						
insulated (jumper) 2pole						
3pole						
to 12pole						
6. Single cover f. cross conn. with marking facility	AD VB 2,5/15 GELB	04.326.3053.8	10	AD VB 2,5/15 GELB	04.326.3053.8	10
7. Partition plate with marking facility	TSM 2,5/15	07.311.2853.8	10	TSM 2,5/15	07.311.2853.8	10

For more accessories see pages 160-177
For marking systems see pages 178-179 and 200-202

selos

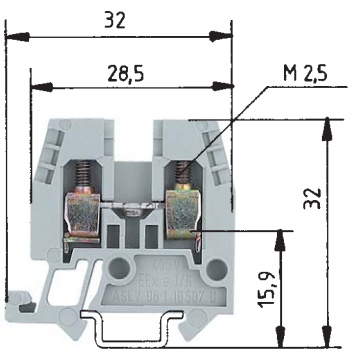

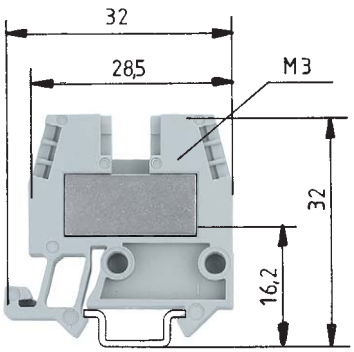

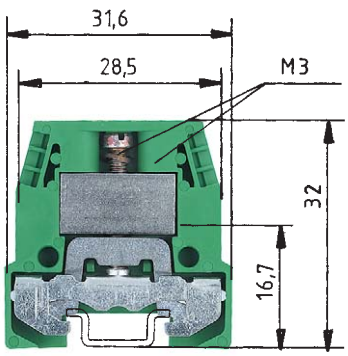

WKM 2,5/15

fine stranded	solid	V	A
0.5 – 2.5 mm²	0.5 – 4 mm²	500 V/6 kV/3	24
No. 22-14 AWG		300 V	10
No. 22-12 AWG		600 V	25
5 mm			9 mm

SEV-EEX LR * ** BKI-EEx

Type	Part no.	Std. pack
WKM 2,5/15	55.503.1053.0	100
WKM 2,5/15 BLAU	55.503.1053.6	100
9021/15 x 5,5 EN 60715	98.090.0015.0	10
9208 S 15	Z5.522.7553.0	100
APM 2,5 - 4/15	07.311.0853.0	10
APM 2,5 - 4/15 BLAU	07.311.0853.6	10
TWM 2,5 - 4/15	07.311.1853.0	10
TWM 2,5 - 4/15 BLAU	07.311.1853.6	10
AD VB 2,5/15 GELB	04.326.3053.8	10
TSM 2,5/15	07.311.2853.8	10

*CL I, ZN1, AExe II / **CL I, ZN1, Exe II pending

WKM 4/15

fine stranded	solid	V	A
0.5 – 4 mm²	0.5 – 6 mm²	500 V/6 kV/3	32
No. 22-10 AWG		600 V	30
No. 20-10 AWG		600 V	37
6 mm			9 mm

LR * **

Type	Part no.	Std. pack
WKM 4/15	55.504.1053.0	100
WKM 4/15 BLAU	55.504.1053.6	100
9021/15 x 5,5 EN 60715	98.090.0015.0	10
9208 S 15	Z5.522.7553.0	100
APM 2,5 - 4/15	07.311.0853.0	10
APM 2,5 - 4/15 BLAU	07.311.0853.6	10
TWM 2,5 - 4/15	07.311.1853.0	10
TWM 2,5 - 4/15 BLAU	07.311.1853.6	10
IVB WK 4 E/U-2	Z7.271.2227.0	10
IVB WK 4 E/U-3	Z7.271.2327.0	10
IVB WK 4 E/U-12	Z7.271.3227.0	10
AD VB 4/15 GELB	04.326.2953.8	10
TSM 4/15	07.311.2953.8	10

*CL I, ZN1, AExe II / **CL I, ZN1, Exe II pending

WKM 4 SL/15

fine stranded	solid	V	A
0.5 – 4 mm²	0.5 – 6 mm²	500 V/6 kV/3*)	
No. 22-14 AWG		300 V*)	10
No. 22-10 AWG			
6 mm			9 mm

SEV-EEX LR * ** BKI-EEx

Type	Part no.	Std. pack
WKM 4 SL/15	55.504.9153.0	100
9021/15 x 5,5 EN 60715**)	98.090.0015.0	10
9208 S 15	Z5.522.7553.0	100
APM 4 SL/15	07.311.0753.0	10

*CL I, ZN1, AExe II / **CL I, ZN1, Exe II pending

Current transformer disconnect terminals

selos

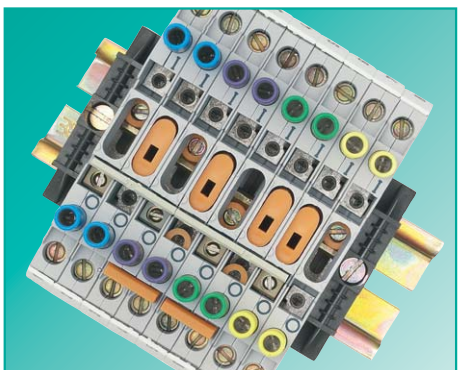

Current transformer circuits must always have a closed secondary circuit. This rule applies even when changing measuring instruments or electric meters and when carrying out reference measurements with external measuring instruments.

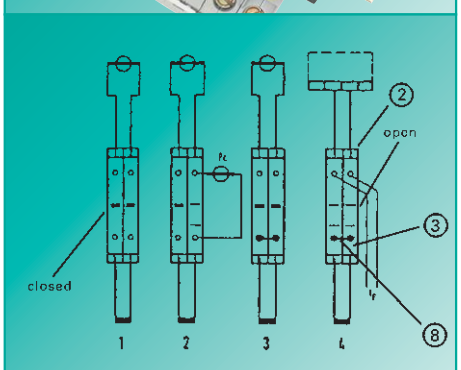

❒ The WKT-Terminal Block Series meets all circuit applications with the addition of a few accessories.

→ This modular concept reduces inventory and component costs.

❒ All components including the terminal block and accessories are insulated.

→ Test points are touch safe to the standard VGB4

→ Sliding link and jumper bars are touch safe.

❒ **Compact design:**

→ Easy to operate Sliding-Link

→ Jumper Bars

→ Siding Shorting Bars

→ Test plug socket

→ The insulated housing on the Sliding-Link provides a guide for the screwdriver blade. This prevents the blade from accidentally slipping off the screw head. The insulated housing also provides visual indication of the circuit status (open or closed).

→ Accessories are easily installed with a screwdriver, even the test plugs.

❒ Safe operation of the sliding shorting bar: The sliding shorting bar is touch safe.

→ The sliding shorting bar is designed such that the test plug socket remains available for testing.

selos

Insulated Jumpering System

Distribution of the K - potential is possible due to the open slots for both the sliding shorting bar and the stationary jumper bar. Commoning every other terminal is possible by removing every other pole from the stationary jumper bar (see drawing on page 149).

Insulated **Test sockets**

The test sockets accept Wieland standard plugs or commercially available safety plugs with a diameter of 4mm.

This allows current tests without shut-down.

The sliding disconnect locking device prevents tampering of the disconnect screw. The locking device can lock the screw in open or closed position. This device is easily installed into the top of the terminal block. Removing the locking device requires a standard screwdriver.

Marking capability with the standard Wieland marking system.

- ❒ Single marking tags in the same pitch as the terminal block
- ❒ Snap-on marking strips (10 individual marking tags per strip) for rapid marking
- ❒ Tear-off marking strips for marking up to 3-digits per terminal block

DQS certificates for all product families

- ❒ Quality standard as per DIN ISO 9001
- ❒ in Development, Production, Assembly
- ❒ Continued control of the quality standard by means of regular internal and external quality audits
- ❒ Compatible with certificates of other countries:
  - – BSI Certificate, Great Britain
  - – SQS Certificate, Switzerland
  - – Aib-Vincotte Certificate, Belgium
  - – ÖQS Certificate, Austria

Material

- ❒ Special alloys and surface treatments
- ❒ Low contact resistance
- ❒ High corrosion Resistance

❒ Metal parts

Clamping body/clamping screws: steel, zinc-plated and dichromated

Current carrying bar: Tin plated copper alloy

❒ Insulation material

Polyamide 66/6 for its excellent electrical, chemical and mechanical characteristics
(see section ***facts*** & DATA)
Material accord. to US standard UL 94-V0

You can use our **wieplan** software to configure your own terminal block assemblies
(see page 10/11).

Note:

The information regarding cross sectional area and connection types pertains to unprepared wires without ferrules.

The voltage ratings apply to the terminals in their intended application. When different products are mounted adjacent to each other, the proper isolation distances must be adhered to. For this purpose, **Wieland** offers a large selection of appropriate accessories.

A detailed description of technical data, the standards' requirements, and the application conditions can be found in part ***facts*** & DATA.

Current transformer disconnect terminal block

selos

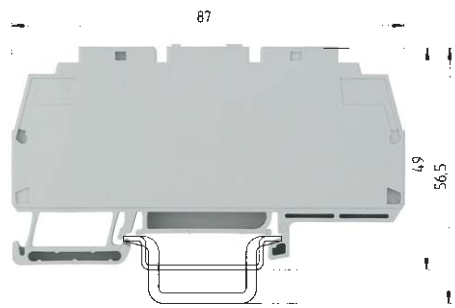

available from 02/02

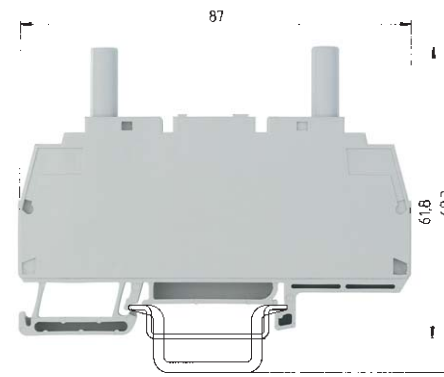

available from 02/02

		WK6 TK/35			WK6 TK P3/35		
		fine stranded	solid	V	fine stranded	solid	V
EN 60 947-7-1/DIN VDE 0611 T1		0.5 – 6 mm²	0.5 – 10 mm²	400 V/6 kV/3	0.5 – 6 mm²	0.5 – 10 mm²	400 V/6 kV/3
UL-ratings	field/factory wiring	No. 20-8 AWG		600 V	No. 20-8 AWG		600 V
CSA ratings		No. 20-8 AWG		300 V	No. 20-8 AWG		300 V
Width	Wire strip length	8 mm			8 mm		
Approvals		pending			pending		

		Type	Part no.	Std. pack	Type	Part no.	Std. pack
Current transformer disconnect terminal		WK6 TK/35	56.106.0553.0		WK6 TK P3/35	56.106.0653.0	
Accessories							
1. Mounting rail TS 35, DIN rail 7.5mm high	L = 2 m	35 x 27 x 7,5 EN 60715	98.300.0000.0	1	35 x 27 x 7,5 EN 60715	98.300.0000.0	1
Mounting rail TS 35, DIN rail, 15mm high	L = 2 m	35 x 24 x 15 EN 60715	98.360.0000.0	1	35 x 24 x 15 EN 60715	98.360.0000.0	1
Mounting rail TS 32, G rail	L = 2 m						
2. End clamp with U-foot	10 mm wide	WE 1/U	Z5.523.5753.0	100	WE 1/U	Z5.523.5753.0	100
End clamp TS 35 with screw	8 mm wide	9708/2 S 35	Z5.522.8553.0	100	9708/2 S 35	Z5.522.8553.0	100
End clamp TS32 with screw	7.5 mm wide						
3. Disconnect locking device		SP WK6 TK	05.563.5453.0		SP WK6 TK	05.563.5453.0	
4. Sliding short-circuit slide							
insulated	2pole	IVS WK6 TK-2	Z7.212.2227.0		IVS WK6 TK-2	Z7.212.2227.0	
	3pole	IVS WK6 TK-3	Z7.212.2327.0		IVS WK6 TK-3	Z7.212.2327.0	
	4pole	IVS WK6 TK-4	Z7.212.2427.0		IVS WK6 TK-4	Z7.212.2427.0	
5. Jumper bar with screws, E-Cu							
insulated	2pole	IVB WK6 TK-2	Z7.212.1227.0		IVB WK6 TK-2	Z7.212.1227.0	
	3pole	IVB WK6 TK-3	Z7.212.1327.0		IVB WK6 TK-3	Z7.212.1327.0	
	4pole	IVB WK6 TK-4	Z7.212.1427.0		IVB WK6 TK-4	Z7.212.1427.0	
	5pole	IVB WK6 TK-5	Z7.212.1527.0		IVB WK6 TK-5	Z7.212.1527.0	
	10pole	IVB WK6 TK-10	Z7.212.2027.0		IVB WK6 TK-10	Z7.212.2027.0	
6. Test socket	Color: gray	SB 4 GRAU	05.511.2953.0		SB 4 GRAU	05.511.2953.0	
	Color: violet	SB 4 VIOLETT	05.511.2953.9		SB 4 VIOLETT	05.511.2953.9	
	Color: green	SB 4 GRÜN	05.511.2953.7		SB 4 GRÜN	05.511.2953.7	
	Color: yellow	SB 4 GELB	05.511.2953.8		SB 4 GELB	05.511.2953.8	
For more accessories see pages 160-177							
For marking systems see pages 178-179 and 200-202							

selos

Application example:

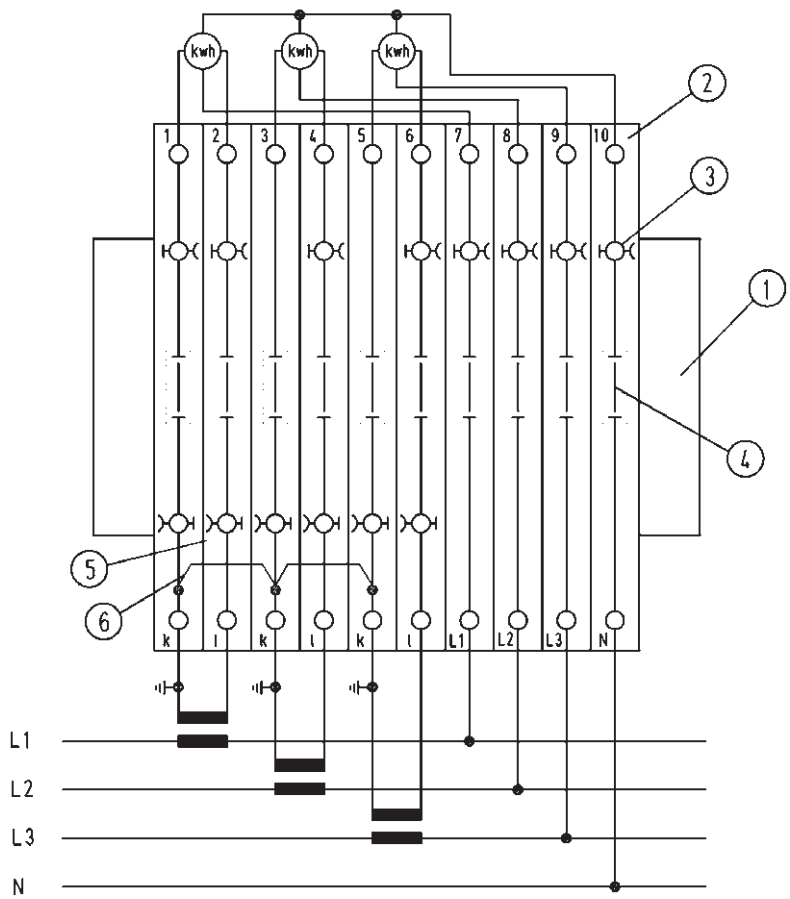

Pos.	Type	Part no.	Std. pack
1.	WE 1/4	Z5.523.5753.0	100
2.	WK6 TK/35	56.106.0053.0	
3.	SB 4 GRAU	Z5.523.5753.0	100
4.	SB WK6 TK	05.563.5453.0	
5.	IVS WK6 TK-2	Z7.212.2227.0	
	for a common K-potential		
6.	IVB WK6 TK-5	Z7.212.1527.0	

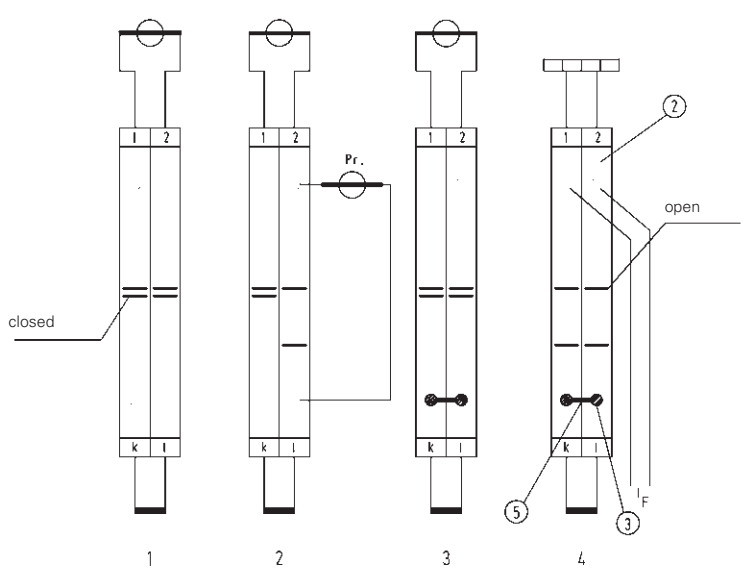

Simple current transformer circuits

1 = normal operation
2 = measured value testing
3 = transformer short circuit
4 = relay testing

selos POWER LINE

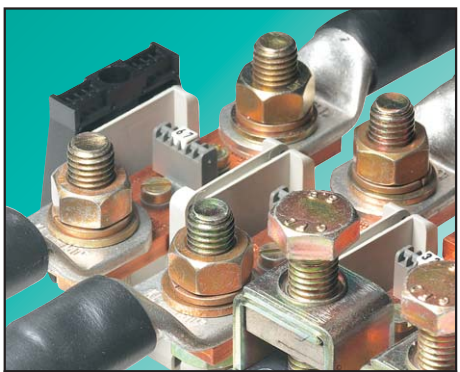

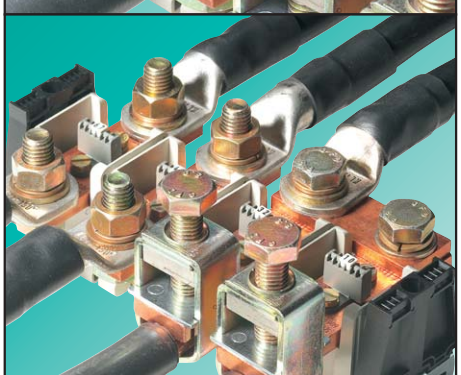

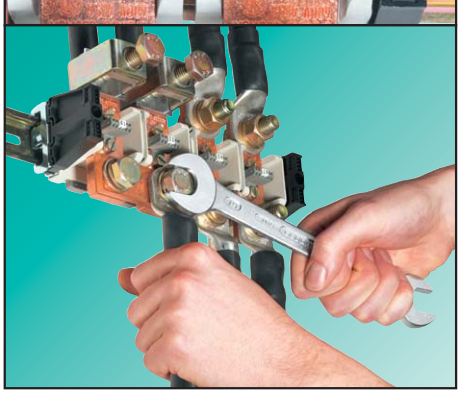

RFK offers ...

❒ **Rising Cage Connection Technology**

Application advantages

→ A stripped wire can be connected without ferules/unprepared

→ Secure connection due to the elastic design of the clamping body

❒ **Rising Cage and Ring Terminal Connection**

❒ **Ring Terminal** connections in two styles:
– Screw (bolt) with nut
– Screw (bolt) with threaded current bar

→ Connection requires ring lug terminal

→ Secure connection with use of lock washers

❒ **Rated cross section:** 95 – 240 mm^2

❒ **Connection Range:** 2/0 AWG - 500 MCM

❒ **Material:**
– Insulating housing, partition, cover: Polyamide 66/6
– Current carrying bar and jumper rail: E-Cu
– Screws, nuts, washers, clamping bodies: galvanically zinc-plated steel

→ Due to its excellent electrical, chemical and mechanical properties

→ Low contact resistance

❒ **Touch Safe Covers**

→ Touch safe covers can be installed after connections have been made and do not increase the pitch of the assembly.

→ Partition plates provide both visual and electrical separation of adjacent terminals. They do not increase the pitch of the assembly and can be marked with the Wieland standard marking system.

❒ **Partition Plates** with marking capability

❒ **Jumper bar:**
Available in 2, 3, or 4 pole versions.

→ Jumper bars are used to common the potential of RFK terminals with ring connection.

Installation instructions:
When tightening the terminal screw, it is recommended that you hold it against the conductor in order to prevent deformation of the mounting rail and to keep the foot of the terminal free from torsional forces.

The threaded hole in the foot of the terminal type RFK 1/...PA enables the terminals to be screwed to the mounting rail. Perforated rails are available for the purpose and the mounting rail is pre-drill accordingly on site or at the factory.

Caution: Make sure that the recommended stripped length for the conductor of 27 mm is observed!

selos

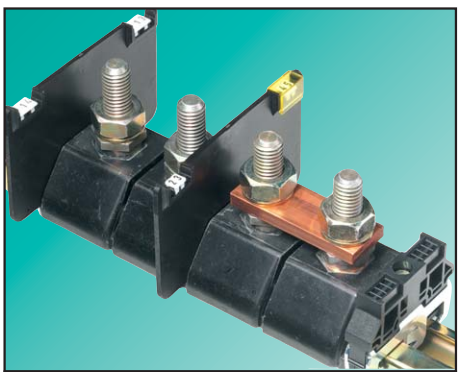

BK offers ...

- ❒ **Stud bolt connection**
- ❒ **Torque values to stud bolt diameter standard up to 10 Nm**

  Connection range per stud bolt diameter standard DIN 46 234 from 2.5 to 240 mm

Application advantages

→ No loose wires

→ High contact force ensures a secure connection with the use of a lock washer

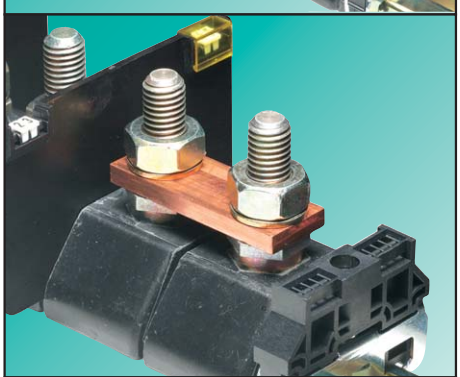

❒ **Material:**
- – Insulated housing: epoxy resin
- – Stud Bolt, nut and lock washer: galvanized steel, zinc plated
- – Jumper Bar: E-Cu
- – Locking slide, marking tag, and marking tag holder: Polyamide

→ Constant operating temperature; 150 °C

→ Nuts, washer, lock washer are included but are packaged separately

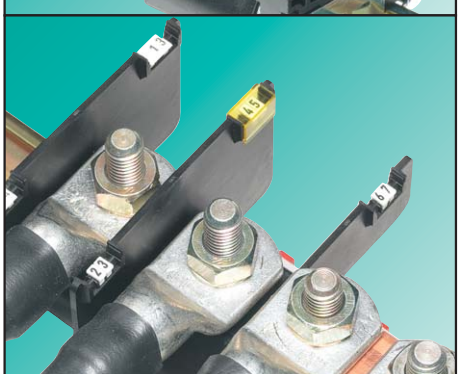

❒ **End plates / partition plate** with marking capability

→ End plates/partition plates provide both visual and electrical separation of adjacent terminals. They do not increase the pitch of the assembly and can be marked with the Wieland standard marking system.

❒ **Marking tag cover**

→ The marking tag cover is a translucent yellow material which protects the marking tag against dust and other industrial elements.

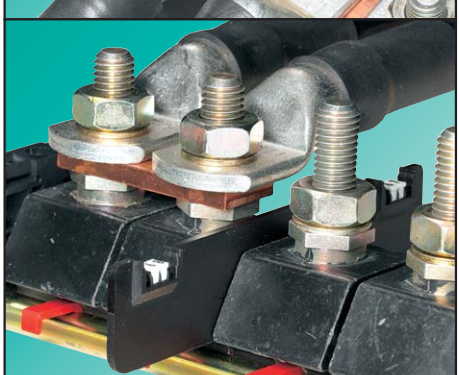

❒ **Jumper bar:**
Available in 2, 3, 4 pole versions

❒ **Locking slides**
allows the BK series to be locked onto the DIN rail

→ With the BK terminal series fot ting connection, it is possible to common the potential of adjacent terminals with a jumper bar.

→ The locking slide ensures secure mounting of the BK terminal on the DIN rail. This is important due to larger conductor sizes and higher torque values of the BK series.

DQS certificates for all company divisions

- ❒ Quality standard as per DIN ISO 9001
- ❒ in Development, Production, Assembly
- ❒ Continued control of the quality standard by means of regular internal and external quality audits
- ❒ Compatible with certificates of other countries:
- – BSI Certificate, Great Britain
- – SQS Certificate, Switzerland
- – Aib-Vincotte Certificate, Belgium
- – ÖQS Certificate, Austria

You can use our **wieplan** software to configure your own terminal block assemblies (see page 10/11).

A detailed description of technical data, the standards' requirements, and the application conditions can be found in part ***facts*** & DATA.

Stud bolt terminal for 32 mm DIN rail

selos POWER LINE

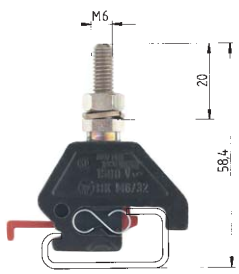

The wire size is dependent on the hole diameter of the ring terminal of 6.5 mm and the max. ring terminal width of 15 mm

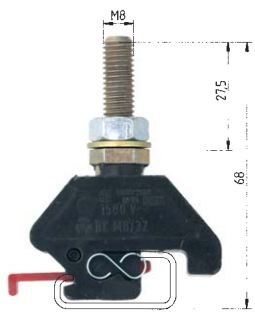

The wire size is dependent on the hole diameter of the ring terminal of 6.5 mm and the max. ring terminal width of 15 mm

		BK M 6/32				BK M 8/32			
DIN VDE 0110				V	A			V	A
UL-ratings	field/factory wiring	1500 V~	1800 V ⎓	Gr. C		1500 V~	1800 V ⎓	Gr. C	
CSA ratings		2 AWG		600 V	115	3/0 AWG		1000 V	200
Width	Wire strip length	18 mm				26 mm			
Approvals		SEV, CSA, CE				SEV, CSA, CE			

	Type	Part no.	Std. pack	Type	Part no.	Std. pack
Stud bolt terminal	BK M 6/32	32.630.0042.0	50	BK M 8/32	32.640.0042.0	50
Accessories						
1. Mounting rail TS 35, DIN rail, 7.5 mm high L = 2 m						
Mounting rail TS 35, DIN rail 15 mm high L = 2 m						
Mounting rail TS 35, G rail L = 2 m	9006 EN 60715 G-32	98.190.0000.0	1	9006 EN 60715 G-32	98.190.0000.0	1
2. End clamp with U-foot 10 mm wide	WE 1/U	Z5.523.5753.0	100	WE 1/U	Z5.523.5753.0	100
End clamp TS32 with screw 8 mm wide						
End clamp TS32 with screw 7.5 mm wide	9708	Z5.522.7053.0	100	9708	Z5.522.7053.0	100
3. End plate with marking capability		07.340.4153.0	50		07.340.4153.0	50
				or	07.340.4353.0 *)	50
4. Partition with marking capability		07.340.1153.0	50		07.340.1153.0	50
				or	07.340.1353.0 *)	50
5. Jumper bar from E-Cu						
for 2 blocks						
for 3 blocks						
for 4 blocks						
6. Marking tag cover (see page 151) Color: yellow		04.326.0056.0	100		04.326.0056.0	100
7. Marking plate		07.340.2153.0	50		07.340.2153.0	50
				or	07.340.2353.0 *)	50

*) When selecting the partition you have to consider the air and creepage distances.

For marking systems see pages 178-179 and 200-202

selos

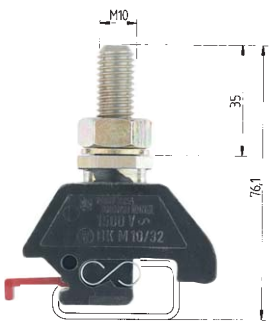

The cross sectional area is determined by the bore hole diameter of the ring terminal of 10.5 mm and the max. ring terminal width of 30 mm

BK M 10/32

		V	A
1500 V~	1800 V ⎓	Gr. C	
300 MCM		1000 V	285
32 mm			

Type	Part no.	Std. pack
BK M 10/32	32.650.0042.0	50
9006 EN 60715 G-32	98.190.0000.0	1
WE 1/U	Z5.523.5753.0	100
9708	Z5.522.7053.0	100
	07.340.4353.0	50
	07.340.1353.0	50
VB RFK 1/95/2/32	07.205.1227.0	20
VB RFK 1/95/3/32	07.205.1327.0	10
VB RFK 1/95/4/32	07.205.1427.0	10
	04.326.0056.0	100
	07.340.2353.0	50

Part no.	B	H_1	H_2
07.340.2153.0	80	22	
07.340.2353.0	115	25	
07.340.4153.0	80		50
07.340.4353.0	115		62
07.340.1153.0	80		50
07.340.1353.0	115		62

Standard to DIN 46 234

Stud Bolt Diameter	Wire gauge mm^2	AWG/MCM	Hole diameter of the ring terminal	Width of ring terminal
6	2.5	14	6.5	11
6	6	10	6.5	11
6	10	8	6.5	11
6	16	6	6.5	11
6	25	4	6.5	12
6	35	2	6.5	15
8	2,5	14	8.4	14
8	6	10	8.4	14
8	10	8	8.4	14
8	16	6	8.4	14
8	25	4	8.4	16
8	35	2	8.4	16
8	50	0	8.4	18
8	70	2/0	8.4	22
8	95	3/0	8.4	24
8	120	250	8.4	24
10	6	10	10.5	18
10	10	8	10.5	
10	16	6	10.5	18
10	25	4	10.5	18
10	35	2	10.5	18
10	50	0	10.5	18
10	70	2/0	10.5	22
10	95	3/0	10.5	24
10	120	250	10.5	24
10	150	300	10.5	30

Stud bolt terminal for TS 35 mm DIN rail

selos POWER LINE

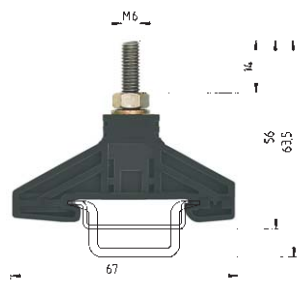

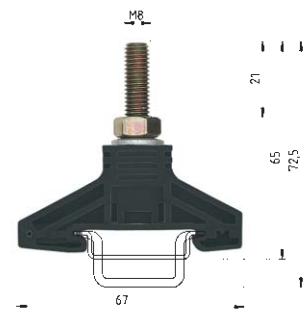

		BK M 6/35	BK M 8/35
		V A	V A
DIN VDE 0110		250 V/4 kV/6[1)]	250 V/4 kV/6[1)]
UL-ratings	field/factory wiring		
CSA ratings			
Width		19.6 mm	24.6 mm
Approvals			

		Type	Part no.	Std. pack	Type	Part no.	Std. pack
Stud bolt terminal		BK M 6/35	32.530.0053.0		BK M 8/35	32.540.0053.0	
Accessories							
1. Mounting rail TS 35, DIN rail, 7.5 mm high	L = 2 m	35 x 27 x 7,5 EN 60715	98.300.0000.0	1	35 x 27 x 7,5 EN 60715	98.300.0000.0	1
Mounting rail TS 35, DIN rail 15 mm high	L = 2 m	35 x 24 x 15 EN 60715	98.360.0000.0	1	35 x 24 x 15 EN 60715	98.360.0000.0	1
Mounting rail TS 35, G rail	L = 2 m						
2. End clamp with U-foot	10 mm wide	WE 1/U	Z5.523.5753.0	100	WE 1/U	Z5.523.5753.0	100
End clamp TS35 with screw	8 mm wide	9708/2 S 35	Z5.522.8553.0	100	9708/2 S 35	Z5.522.8553.0	100
End clamp TS32 with screw	7.5 mm wide						
3. Partition plate		TW BK M 6/35	07.340.3553.0		TW BK M 8/35	07.340.3653.0	
4. Jumper bar:	from E-Cu						
	for 2 pole	VB BK M 6/35-2	07.205.5227.0		VB BK M 8/35-2	07.205.7227.0	
	for 3 pole	VB BK M 6/35-3	07.205.5327.0		VB BK M 8/35-3	07.205.7327.0	
6. Marking tag							
For marking systems see pages 178-179 and 200-202		available for delivery from 04/2002			available for delivery from 04/2002		

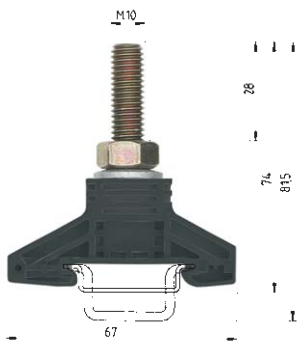

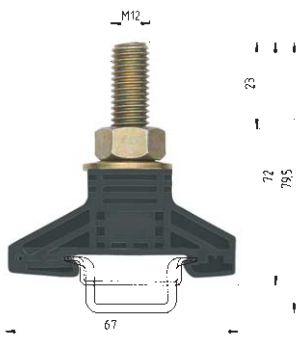

BK M 10/35

V A
250 V/4 kV/6[1)]

35.6 mm

BK M 12/35

V A
250 V/4 kV/6[1)]

[1)] Without partition plate
800V / 8K V/3 with partion plate TWBK

35.6 mm

Type	Part no.	Std. pack	Type	Part no.	Std. pack
BK M 10/35	32.550.0053.0		BK M 12/35	32.560.0053.0	
35 x 27 x 7,5 EN 60715	98.300.0000.0	1	35 x 27 x 7,5 EN 60715	98.300.0000.0	1
35 x 24 x 15 EN 60715	98.360.0000.0	1	35 x 24 x 15 EN 60715	98.360.0000.0	1
WE 1/U	Z5.523.5753.0	100	WE 1/U	Z5.523.5753.0	100
9708/2 S 35	Z5.522.8553.0	100	9708/2 S 35	Z5.522.8553.0	100
TW BK M 10-12/35	07.340.3753.0		TW BK M 10-12/35	07.340.3753.0	
VB BK M 10/35-2	07.205.8227.0		VB BK M 10/35-2	07.205.9227.0	
VB BK M 10/35-3	07.205.8327.0		VB BK M 10/35-3	07.205.9327.0	
available for delivery from 04/2002			available for delivery from 04/2002		

Terminal blocks for up to 240 mm² (500 MCM)

selos POWER LINE

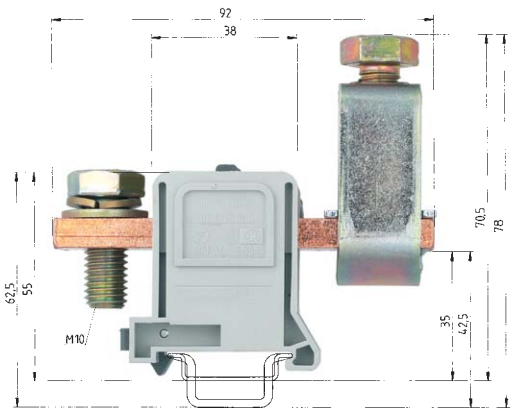

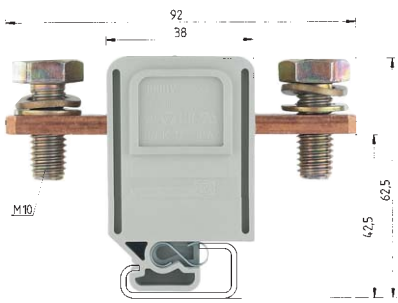

		RFK 1/95... S35			RFK 1/95... PA		
		fine stranded	V	A	fine stranded	V	A
DIN VDE 0611 Teil 1/EN 60947-7-1		16-95 mm²	1000 V	250	16-95 mm²	1000 V	250
UL-ratings	field/factory wiring	6-3/0 AWG	600 V	200	6-3/0 AWG	600 V	200
CSA ratings		6-3/0 AWG	600 V	200	6-3/0 AWG	600 V	200
Width	Wire strip length	32 mm		27 mm	32 mm		27 mm
Approvals		GL SEV N NV KEMA LR UL CSA B CE			GL SEV N NV KEMA LR UL CSA B CE		

			Type	Part no.	Std. pack	Type	Part no.	Std. pack
Configurations	Color: gray	**F**	RFK 1/95 F S 35	56.395.0055.0	10	RFK 1/95 F PA	59.195.0055.0	10
	Color: gray	**K**	RFK 1/95 K S 35	56.395.0155.0	10	RFK 1/95 K PA	59.195.0155.0	10
	Color: gray	**FK**	RFK 1/95 FK S 35	56.395.0255.0	10	RFK 1/95 FK PA	59.195.0255.0	10
	Color: gray	**FM**	RFK 1/95 FM S 35	56.395.1055.0	10	RFK 1/95 FM PA	59.195.1055.0	10
	Color: gray	**FMK**	RFK 1/95 FMK S 35	56.395.1255.0	10	RFK 1/95 FMK PA	59.195.1255.0	10
Accessories								
1. Mounting rail TS 35, DIN rail, 7.5 mm high		L = 2 m	35 x 27 x 7,5 EN 60715	98.300.0000.0	1			
Mounting rail TS 35, DIN rail 15 mm high		L = 2 m	35 x 24 x 15 EN 60715	98.360.0000.0	1			
Mounting rail TS 35, G rail		L = 2 m				9006 EN 60715 G-32	98.190.0000.0	1
2. End clamp with U-foot		10 mm wide	WE 2/U	Z5.523.5653.0	100	WE 2/U	Z5.523.5653.0	100
End clamp TS35 with screw		8 mm wide	9708/2 S35	Z5.522.8553.0	100	9708/2 S35	Z5.522.8553.0	100
End clamp TS32 with screw		7.5 mm wide	9708	Z5.522.7053.0	100	9708	Z5.522.7053.0	100
3. Cover for RFK 1/...		Color: yellow		Z7.409.5753.0	10		Z7.409.5753.0	10
4. Partition/end plate PA 66/6		2.8 mm thick	TE/RFK 1/95	07.340.0353.0	50	TE/RFK 1/95	07.340.0353.0	50
5. Screws for fixation on the mounting rail						AM 5 x 12 DIN 933	06.065.0021.0	100
6. Jumper bar for tab connection blocks		from E-Cu						
		for 2 blocks	VB RFK 1/95/2/32	07.205.1227.0	20	VB RFK 1/95/2/32	07.205.1227.0	20
		for 3 blocks	VB RFK 1/95/3/32	07.205.1327.0	10	VB RFK 1/95/3/32	07.205.1327.0	10
		for 4 blocks	VB RFK 1/95/4/32	07.205.1427.0	10	VB RFK 1/95/4/32	07.205.1427.0	10

For marking systems see pages 178-179 and 200-202

selos

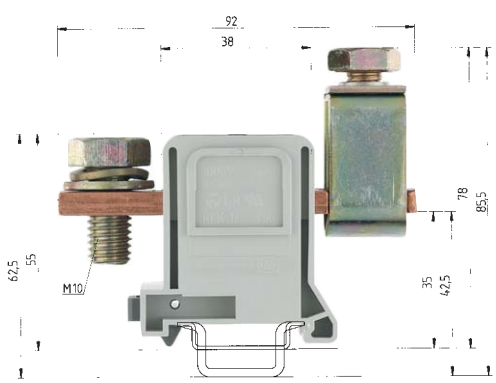

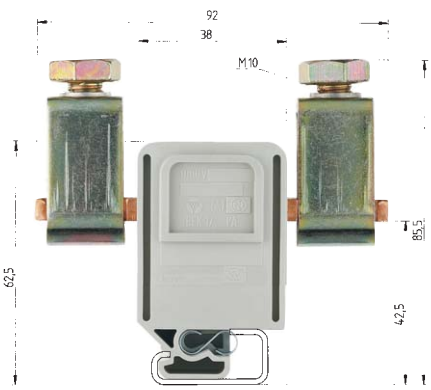

RFK 1/150... S35

fine stranded	V	A
70-240 mm² 70-240 mm²	1000 V	335
0 AWG - 300 MCM	600 V	275
0 AWG - 300 MCM	600 V	300
42 mm		27 mm

RFK 1/150... PA

fine stranded	V	A
70-240 mm² 70-240 mm²	1000 V	335
0 AWG - 300 MCM	600 V	275
0 AWG - 300 MCM	600 V	300
42 mm		27 mm

mm²	Type	a x b	M I	M II	H	L	F	E
95	F, K, FK, FM, FMK	5 x 18	M 10	M 8	78	180	92	46
150	K, FK, FMK	6 x 26	M 12	M 10	85.5	200	92	46

Type	Part no.	Std. pack	Type	Part no.	Std. pack
RFK 1/150 K S35	56.397.0155.0		RFK 1/150 K PA	59.197.0155.0	10
RFK 1/150 FK S35	56.397.0255.0		RFK 1/150 FK PA	59.197.0255.0	10
RFK 1/150 FMK S35	56.397.1255.0		RFK 1/150 FMK PA	59.197.1255.0	10
35 x 27 x 7,5 EN 60715	98.300.0000.0	1			
35 x 24 x 15 EN 60715	98.360.0000.0	1			
			9006 EN 60715 G-32	98.190.0000.0	1
WE 2/U	Z5.523.5653.0	100	WE 2/U	Z5.523.5653.0	100
9708/2 S35	Z5.522.8553.0	100	9708/2 S 35	Z5.522.8553.0	100
9708	Z5.522.7053.0	100	9708	Z5.522.7053.0	100
	Z7.409.5753.0	10		Z7.409.5753.0	10
TE/RFK 1/150 - 240 PA	07.340.1053.0	50	TE/RFK 1/150 - 240 PA	07.340.1053.0	50
			AM 5 x 12 DIN 933	06.065.0021.0	100
VB RFK 1/185/2	07.201.4227.0	10	VB RFK 1/185/2	07.201.4227.0	10
VB RFK 1/185/3	07.201.4327.0	10	VB RFK 1/185/3	07.201.4327.0	10
VB RFK 1/185/4	07.201.4427.0	10	VB RFK 1/185/4	07.201.4427.0	10

Configurations:

F

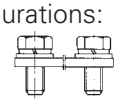

K

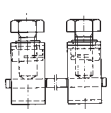

FK

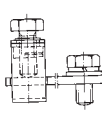

FM

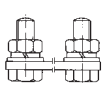

FMK

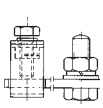

Terminal blocks for up to 240 mm² (500 MCM)

selos POWER LINE

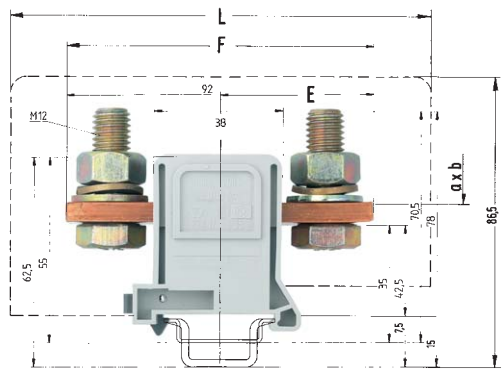

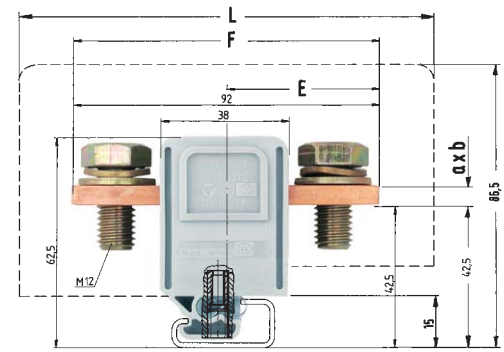

		RFK 1/185... S35				RFK 1/185... PA			
				V	A			V	A
EN 60 947-7-1/DIN VDE 0611 T1				1000 V/8 kV/3	353			1000 V/8 kV/3	353
UL-ratings	field/factory wiring	0 AWG - 400 kcmil		600 V	375	0 AWG - 400 kcmil		600 V	375
CSA ratings		0 AWG - 400 MCM		600 V	375	0 AWG - 400 MCM		600 V	375
Width	Wire strip length	42 mm			27 mm	42 mm			27 mm
Approvals									

			Type	Part no.	Std. pack	Type	Part no.	Std. pack
Configuration	Color: gray	**F**	RFK 1/185 F S 35	56.398.0055.0	10	RFK 1/185 F PA	59.198.0055.0	10
	Color: gray	**K**						
	Color: gray	**FK**						
	Color: gray	**FM**	RFK 1/185 FM S 35	56.398.1055.0	10	RFK 1/185 FM PA	59.198.1055.0	10
	Color: gray	**FMK**						
Accessories								
1. Mounting rail TS 35, DIN rail, 7.5 mm high		L = 2 m	35 x 27 x 7,5 EN 60715	98.300.0000.0	1			
Mounting rail TS 35, DIN rail 15 mm high		L = 2 m	35 x 24 x 15 EN 60715	98.360.0000.0	1			
Mounting rail TS 35, G rail		L = 2 m				9006 EN 60715 G-32	98.190.0000.0	1
2. End clamp with U-foot		10 mm wide	WE 2/U	Z5.523.5653.0	100	WE 2/U	Z5.523.5653.0	100
End clamp TS32 with screw		8 mm wide	9708/2 S35	Z5.522.8553.0	100			
End clamp TS32 with screw		7.5 mm wide				9708	Z5.522.7053.0	100
3. Cover for RFK 1/...		Color: yellow		Z7.409.5853.0	10		Z7.409.5853.0	10
4. Partition/end plate PA 66/6		2.8 mm thick	TE/RFK 1/150 - 240 PA	07.340.1053.0	50	TE/RFK 1/150 - 240 PA	07.340.1053.0	50
5. Screws for fixation on the mounting rail						AM 5 x 12 DIN 933	06.065.0021.0	100
6. Jumper bar for tab connection blocks		from E-Cu						
		for 2 blocks	VB RFK 1/185/2	07.201.4227.0	10	VB RFK 1/185/2	07.201.4227.0	10
		for 3 blocks	VB RFK 1/185/3	07.201.4327.0	10	VB RFK 1/185/3	07.201.4327.0	10
		for 4 blocks	VB RFK 1/185/4	07.201.4427.0	10	VB RFK 1/185/4	07.201.4427.0	10

For marking systems see pages 178-179 and 200-202

selos

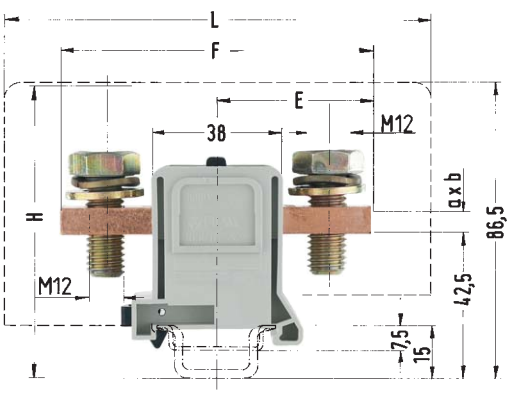

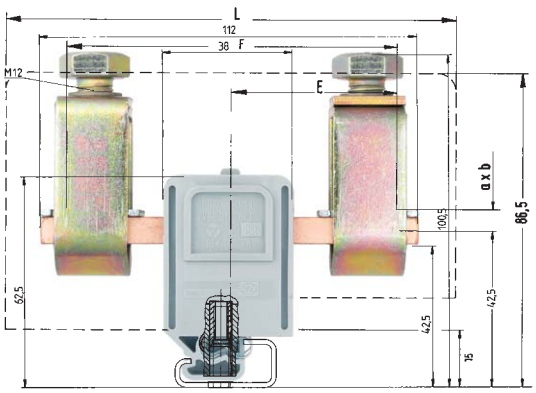

RFK 1/240... S35

fine stranded	stranded	V	A
70-240 mm²	70-240 mm²	1000 V/8 kV/3	415
0 AWG - 500 kcmil		600 V	375
3/0 AWG - 500 MCM		600 V	425
42 mm			27 mm

RFK 1/240... PA

fine stranded	stranded	V	A
70-240 mm²	70-240 mm²	1000 V/8 kV/3	415
0 AWG - 500 kcmil		600 V	375
3/0 AWG - 500 MCM		600 V	425
42 mm			27 mm

mm²	Type	a x b	M I	M II	H	L	F	E
185	F, FM	6 x 26	M 12	–	–	200	92	46
240	F, FM	8 x 26	M 12	–	–	200	92	46
	FK, FMK	8 x 26	M 12	M 12	100.5	200	102	46
	K	8 x 26	–	M 12	100.5	200	112	56

Type	Part no.	Std. pack	Type	Part no.	Std. pack
RFK 1/240 F S 35*)	56.399.0055.0	10	RFK 1/240 F PA*)	59.199.0055.0	10
RFK 1/240 K S 35	56.399.0155.0	10	RFK 1/240 K PA	59.199.0155.0	10
RFK 1/240 FK S 35*)	56.399.0255.0	10	RFK 1/240 FK PA*)	59.199.0255.0	10
RFK 1/240 FM S 35*)	56.399.1055.0	10	RFK 1/240 FM PA*)	59.199.1055.0	10
RFK 1/240 FMK S 35*)	56.399.1255.0	10	RFK 1/240 FMK PA*)	59.199.1255.0	10
35 x 27 x 7,5 EN 60715	98.300.0000.0	1			
35 x 24 x 15 EN 60715	98.360.0000.0	1			
			9006 EN 60715 G-32	98.190.0000.0	1
WE 2/U	Z5.523.5653.0	100	WE 2/U	Z5.523.5653.0	100
9708/2 S 35	Z5.522.8553.0	100			
			9708	Z5.522.7053.0	100
	Z7.409.5853.0	10		Z7.409.5853.0	10
TE/RFK 1/150 - 240 PA	07.340.1053.0	50	TE/RFK 1/150 - 240 PA	07.340.1053.0	50
			AM 5 x 12 DIN 933	06.065.0021.0	100
VB RFK 1/240/2	07.201.8227.0	10	VB RFK 1/240/2	07.201.8227.0	10
VB RFK 1/240/3	07.201.8327.0	10	VB RFK 1/240/3	07.201.8327.0	10
VB RFK 1/240/4	07.201.8427.0	10	VB RFK 1/240/4	07.201.8427.0	10

*) Only use ring terminals accord. to DIN 46234

Configurations:

F

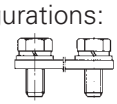

K

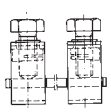

FK

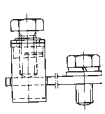

FM

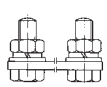

FMK

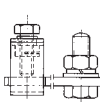

Accessories
for DIN rail terminal blocks

selos

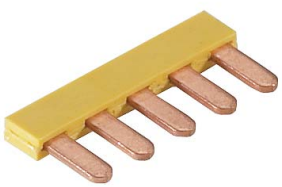

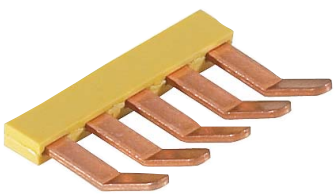

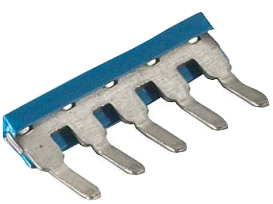

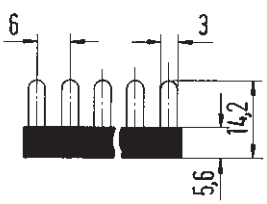

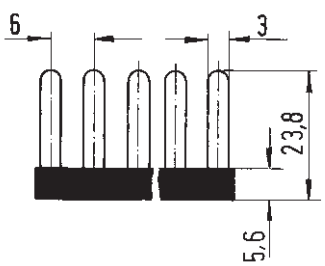

Jumper comb, insulated

Type	Part no.	Std. pack
for terminal blocks type		
WK 2,5-4 KI/U		
WK 2,5-4 KI/U-NGN		
WK 2,5-4 KI/U-PGN		
WK 2,5-4 KI SL		
WK 2,5-4 KI SL-NGN		
WK 2,5-4 KI SL-PGN		
WK 2,5-3 D/U		
WK 2,5-3 D/U-NGN		
WK 2,5-3 D/U-PGN		
WK 2,5-3 D SL		
WK 2,5-3 D SL-NGN		
WK 2,5-3 D SL-PGN		
0.8 mm thick, angled		
2pole VB WK 2,5-K-2 red	Z7.267.0227.5	10
3pole IVB WK 2,5-K-3 red	Z7.267.0327.5	10
4pole IVB WK 2,5-K-4 red	Z7.267.0427.5	10
5pole IVB WK 2,5-K-5 red	Z7.267.0527.5	10
6pole IVB WK 2,5-K-6 red	Z7.267.0627.5	10
7pole IVB WK 2,5-K-7 red	Z7.267.0727.5	10
8pole IVB WK 2,5-K-8 red	Z7.267.0827.5	10
9pole IVB WK 2,5-K-9 red	Z7.267.0927.5	10
10pole IVB WK 2,5-K-10 red	Z7.267.1027.5	10
11pole IVB WK 2,5-K-11 red	Z7.267.1127.5	10
12pole IVB WK 2,5-K-12 red	Z7.267.1227.5	10
70pole IVB WK 2,5-K M-70 red	Z7.267.0027.5	10
0.8 mm thick, angled		
2pole IVB WK 2,5-K-2 blue	Z7.267.0227.6	10
3pole IVB WK 2,5-K-3 blue	Z7.267.0327.6	10
4pole IVB WK 2,5-K-4 blue	Z7.267.0427.6	10
5pole IVB WK 2,5-K-5 blue	Z7.267.0527.6	10
6pole IVB WK 2,5-K-6 blue	Z7.267.0627.6	10
7pole IVB WK 2,5-K-7 blue	Z7.267.0727.6	10
8pole IVB WK 2,5-K-8 blue	Z7.267.0827.6	10
9pole IVB WK 2,5-K-9 blue	Z7.267.0927.6	10
10pole VB WK 2,5-K-10 blue	Z7.267.1027.6	10
11pole IVB WK 2,5-K-11 blue	Z7.267.1127.6	10
12pole IVB WK 2,5-K-12 blue	Z7.267.1227.6	10
70pole VB WK 2,5-K M-70 blue	Z7.267.0027.6	10

Type	Part no.	Std. pack
WK 4 E/U		
1 mm thick		
2pole IVB WK 4 E-2	Z7.255.2227.0	10
3pole IVB WK 4 E-3	Z7.255.2327.0	10
4pole IVB WK 4 E-4	Z7.255.2427.0	10
5pole IVB WK 4 E-5	Z7.255.2527.0	10
6pole IVB WK 4 E-6	Z7.255.2627.0	10
7pole IVB WK 4 E-7	Z7.255.2727.0	10
8pole IVB WK 4 E-8	Z7.255.2827.0	10
9pole IVB WK 4 E-9	Z7.255.2927.0	10
10pole IVB WK 4 E-10	Z7.255.3027.0	10
11pole IVB WK 4 E-11	Z7.255.3127.0	10
12pole IVB WK 4 E-12	Z7.255.3227.0	10
for lower tier blocks only		

Type	Part no.	Std. pack
WK 4 E/U		
1 mm thick, angled		
2pole IVBS WK 4 E-2	Z7.256.4227.0	10
3pole IVBS WK 4 E-3	Z7.256.4327.0	10
4pole IVBS WK 4 E-4	Z7.256.4427.0	10
5pole IVBS WK 4 E-5	Z7.256.4527.0	10
6pole IVBS WK 4 E-6	Z7.256.4627.0	10
7pole IVBS WK 4 E-7	Z7.256.4727.0	10
8pole IVBS WK 4 E-8	Z7.256.4827.0	10
9pole IVBS WK 4 E-9	Z7.256.4927.0	10
10pole IVBS WK 4 E-10	Z7.256.5027.0	10
11pole IVBS WK 4 E-11	Z7.256.5127.0	10
12pole IVBS WK 4 E-12	Z7.256.5227.0	10
for lower tier blocks only		

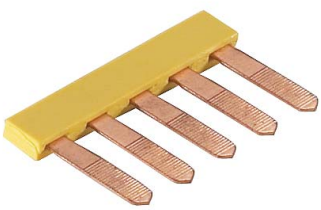

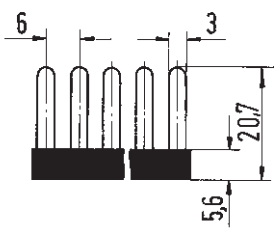

Switchable connecting link

Type	Part no.	Std. pack
WK 4 TKG/U		
WK 4 TKM/U		
WK 4/U		
WK 4 TKS D/U		
WK 4 TKG-TRST/U		
0.5 mm thick		
2pole IVB 0,5 WK 4..-2	Z7.255.0227.0	10
3pole IVB 0,5 WK 4..-3	Z7.255.0327.0	10
4pole IVB 0,5 WK 4..-4	Z7.255.0427.0	10
5pole IVB 0,5 WK 4..-5	Z7.255.0527.0	10
6pole IVB 0,5 WK 4..-6	Z7.255.0627.0	10
7pole IVB 0,5 WK 4..-7	Z7.255.0727.0	10
8pole IVB 0,5 WK 4..-8	Z7.255.0827.0	10
9pole IVB 0,5 WK 4..-9	Z7.255.0927.0	10
10pole IVB 0,5 WK 4..-10	Z7.255.1027.0	10
11pole IVB 0,5 WK 4..-11	Z7.255.1127.0	10
12pole IVB 0,5 WK 4..-12	Z7.255.1227.0	10
1 mm thick		
2pole IVB 1 WK 4..-2	Z7.255.4227.0	10
3pole IVB 1 WK 4..-3	Z7.255.4327.0	10
4pole IVB 1 WK 4..-4	Z7.255.4427.0	10
5pole IVB 1 WK 4..-5	Z7.255.4527.0	10
6pole IVB 1 WK 4..-6	Z7.255.4627.0	10
7pole IVB 1 WK 4..-7	Z7.255.4727.0	10
8pole IVB 1 WK 4..-8	Z7.255.4827.0	10
9pole IVB 1 WK 4..-9	Z7.255.4927.0	10
10pole IVB 1 WK 4..-10	Z7.255.5027.0	10
11pole IVB 1 WK 4..-11	Z7.255.5127.0	10
12pole IVB 1 WK 4..-12	Z7.255.5227.0	10

Type	Part no.	Std. pack
for terminal block type		
WK 2,5/U	Z7.269.4023.0	50
WK 4/U	Z7.269.4123.0	50
WK 6/U	Z7.269.4223.0	50
WK 4 E/..	Z7.269.2923.0	50
WKM 2,5	Z7.269.3623.0	50
WKM 4	Z7.269.0623.0	50

Switchable connecting links reduce the nominal voltage to 380 V!

Link:	nickel-plated brass
Bolt:	nickel-plated brass
Screw:	zinc-plated steel

Type	Part no.	Std. pack

Accessories
for DIN rail terminal blocks

selos

Cross connectors (jumper bars), insulated

Type	Part no.	Std. pack
for terminal blocks type		
WK 2,5 U	**5 mm spacing Screw: M 2.5**	
WK 2,5-4 KOI/U		
WK 2,5 U/8113 S/H		
2pole IVB WK 2,5-2	Z7.280.2227.0	10
3pole VB WK 2,5-3	Z7.280.2327.0	10
4pole IVB WK 2,5-4	Z7.280.2427.0	10
5pole IVB WK 2,5-5	Z7.280.2527.0	10
6pole IVB WK 2,5-6	Z7.280.2627.0	10
7pole IVB WK 2,5-7	Z7.280.2727.0	10
8pole IVB WK 2,5-8	Z7.280.2827.0	10
9pole IVB WK 2,5-9	Z7.280.2927.0	10
10pole IVB WK 2,5-10	Z7.280.3027.0	10
11pole IVB WK 2,5-11	Z7.280.3127.0	10
12pole IVB WK 2,5-12	Z7.280.3227.0	10
WK 2,5-3 D/U	**6 mm spacing Screw: M 2.5**	
WK 2,5-3 D SL		
2pole IVB WK 2,5-3 D-2	Z7.270.0227.0	10
3pole VB WK 2,5-3 D-3	Z7.270.0327.0	10
4pole IVB WK 2,5-3 D-4	Z7.270.0427.0	10
5pole IVB WK 2,5-3 D-5	Z7.270.0527.0	10
6pole IVB WK 2,5-3 D-6	Z7.270.0627.0	10
7pole IVB WK 2,5-3 D-7	Z7.270.0727.0	10
8pole IVB WK 2,5-3 D-8	Z7.270.0827.0	10
9pole IVB WK 2,5-3 D-9	Z7.270.0927.0	10
10pole IVB WK 2,5-3 D-10	Z7.270.1027.0	10
11pole IVB WK 2,5-3 D-11	Z7.270.1127.0	10
12pole IVB WK 2,5-3 D-12	Z7.270.1227.0	10
70pole IVB WK 2,5-3 D M-70	Z7.270.0027.0	10

Type	Part no.	Std. pack
WK 4 TKG/U	**6 mm spacing Screw: M 3**	
WK 4 TKM/U		
WK 4/U		
WK 4 TKS D/U		
WK 4 TKG-TRST/U		
12pole IVB WKI 4-12	Z7.271.5227.0	10
WK 4/U	**6 mm spacing Screw: M 3**	
WK 4 TKS D/U		
WK 4 3 S 1 K/U		
WK 4 3-6 S 1 K/U		
WK 4 5 S 2,8 1 K/U		
WK 4 3 S 1 K/W/U		
WK 4 3-6 S 1 K/W/U		
WK 4/U F1		
WK 4/U F2		
2pole IVB WK 4-2	Z7.281.1227.0	10
3pole IVB WK 4-3	Z7.281.1327.0	10
4pole IVB WK 4-4	Z7.281.1427.0	10
5pole IVB WK 4-5	Z7.281.1527.0	10
6pole IVB WK 4-6	Z7.281.1627.0	10
7pole IVB WK 4-7	Z7.281.1727.0	10
8pole IVB WK 4-8	Z7.281.1827.0	10
9pole IVB WK 4-9	Z7.281.1927.0	10
10pole IVB WK 4-10	Z7.281.2027.0	10
11pole IVB WK 4-11	Z7.281.2127.0	10
12pole IVB WK 4-12	Z7.281.2227.0	10

Type	Part no.	Std. pack
WK 4 E/U	**6 mm spacing Screw: M 3**	
WKM 4		
2pole IVB WK 4E/U-2	Z7.271.2227.0	10
3pole IVB WK 4E/U-3	Z7.271.2327.0	10
4pole IVB WK 4E/U-4	Z7.271.2427.0	10
5pole IVB WK 4E/U-5	Z7.271.2527.0	10
6pole IVB WK 4E/U-6	Z7.271.2627.0	10
7pole IVB WK 4E/U-7	Z7.271.2727.0	10
8pole IVB WK 4E/U-8	Z7.271.2827.0	10
9pole IVB WK 4E/U-9	Z7.271.2927.0	10
10pole IVB WK 4E/U-10	Z7.271.3027.0	10
11pole IVB WK 4E/U-11	Z7.271.3127.0	10
12pole IVB WK 4E/U-12	Z7.271.3227.0	10
WK 4/D 1/2 U	**6 mm spacing Screw: M 3**	
WK 4/D 2/2 U		
2pole IVB WK 4/D..-2	Z7.281.7227.0	10
3pole IVB WK 4/D..-3	Z7.281.7327.0	10
4pole IVB WK 4/D..-4	Z7.281.7427.0	10
5pole IVB WK 4/D..-5	Z7.281.7527.0	10
6pole IVB WK 4/D..-6	Z7.281.7627.0	10
7pole IVB WK 4/D..-7	Z7.281.7727.0	10
8pole IVB WK 4/D..-8	Z7.281.7827.0	10
9pole IVB WK 4/D..-9	Z7.281.7927.0	10
10pole IVB WK 4/D..-10	Z7.281.8027.0	10
11pole IVB WK 4/D..-11	Z7.281.8127.0	10
12pole IVB WK 4/D..-12	Z7.281.8227.0	10
WK 4/DEU	**6 mm spacing Screw: M 3**	
2pole IVB WK 4/DEU-2	Z7.271.0227.0	10
3pole IVB WK 4/DEU-3	Z7.271.0327.0	10
4pole IVB WK 4/DEU-4	Z7.271.0427.0	10
5pole IVB WK 4/DEU-5	Z7.271.0527.0	10
6pole IVB WK 4/DEU-6	Z7.271.0627.0	10
7pole IVB WK 4/DEU-7	Z7.271.0727.0	10
8pole IVB WK 4/DEU-8	Z7.271.0827.0	10
9pole IVB WK 4/DEU-9	Z7.271.0927.0	10
10pole IVB WK 4/DEU-10	Z7.271.1027.0	10
11pole IVB WK 4/DEU-11	Z7.271.1127.0	10
12pole IVB WK 4/DEU-12	Z7.271.1227.0	10

Type	Part no.	Std. pack
WK 6/U	**8 mm spacing Screw: M 3**	
2pole IVB WK 6-2	Z7.282.2227.0	10
3pole IVB WK 6-3	Z7.282.2327.0	10
4pole IVB WK 6-4	Z7.282.2427.0	10
5pole IVB WK 6-5	Z7.282.2527.0	10
6pole IVB WK 6-6	Z7.282.2627.0	10
7pole IVB WK 6-7	Z7.282.2727.0	10
8pole IVB WK 6-8	Z7.282.2827.0	10
9pole IVB WK 6-9	Z7.282.2927.0	10
10pole IVB WK 6-10	Z7.282.3027.0	10
11pole IVB WK 6-11	Z7.282.3127.0	10
12pole IVB WK 6-12	Z7.282.3227.0	10
WKN 10/U	**10 mm spacing Screw: M 3.5**	
2pole IVB WKN 10-2	Z7.283.2227.0	10
3pole IVB WKN 10-3	Z7.283.2327.0	10
4pole IVB WKN 10-4	Z7.283.2427.0	10
5pole IVB WKN 10-5	Z7.283.2527.0	10
6pole IVB WKN 10-6	Z7.283.2627.0	10
7pole IVB WKN 10-7	Z7.283.2727.0	10
8pole IVB WKN 10-8	Z7.283.2827.0	10
9pole IVB WKN 10-9	Z7.283.2927.0	10
10pole IVB WKN 10-10	Z7.283.3027.0	10
11pole IVB WKN 10-11	Z7.283.3127.0	10
12pole IVB WKN 10-12	Z7.283.3227.0	10

Type	Part no.	Std. pack
WKN 16/U	**12 mm spacing Screw: M 4**	
2pole IVB WKN 16-2	Z7.284.2227.0	10
3pole IVB WKN 16-3	Z7.284.2327.0	10
4pole IVB WKN 16-4	Z7.284.2427.0	10
5pole IVB WKN 16-5	Z7.284.2527.0	10
6pole IVB WKN 16-6	Z7.284.2627.0	10
7pole IVB WKN 16-7	Z7.284.2727.0	10
8pole IVB WKN 16-8	Z7.284.2827.0	10
9pole IVB WKN 16-9	Z7.284.2927.0	10
10pole IVB WKN 16-10	Z7.284.3027.0	10
11pole IVB WKN 16-11	Z7.284.3127.0	10
12pole IVB WKN 16-12	Z7.284.3227.0	10
30pole IVB WKN 16 M-30	Z7.284.2027.0	10
WKN 35/U	**16 mm spacing Screw: M 5**	
2pole IVB WKN 35-2	Z7.285.2227.0	5
3pole IVB WKN 35-3	Z7.285.2327.0	5
4pole IVB WKN 35-4	Z7.285.2427.0	5
5pole IVB WKN 35-5	Z7.285.2527.0	5
6pole IVB WKN 35-6	Z7.285.2627.0	5
7pole IVB WKN 35-7	Z7.285.2727.0	5
8pole IVB WKN 35-8	Z7.285.2827.0	5
9pole IVB WKN 35-9	Z7.285.2927.0	5
10pole IVB WKN 35-10	Z7.285.3027.0	5
11pole IVB WKN 35-11	Z7.285.3127.0	5
12pole IVB WKN 35-12	Z7.285.3227.0	5
20pole IVB WKN 35 M-20	Z7.285.2027.0	10

Accessories for DIN rail terminal blocks

selos

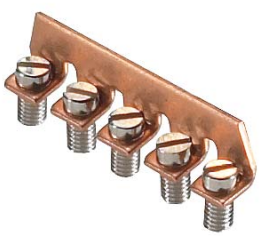

Cross connectors, (jumper bars) uninsulated

Type		Part no.	Std. pack
for terminal blocks type			
WK 2,5/U		**5 mm spacing Screw: M 2.5**	
WK 2,5 - 4 KOI/U			
WK 2,5 U/8113 S/H			
WKN 2,5 E/U			
2pole	VB WK 2,5-2	Z7.280.0227.0	10
3pole	VB WK 2,5-3	Z7.280.0327.0	10
4pole	VB WK 2,5-4	Z7.280.0427.0	10
5pole	VB WK 2,5-5	Z7.280.0527.0	10
6pole	VB WK 2,5-6	Z7.280.0627.0	10
80pole	VB WK 2,5 M-80	Z7.280.0027.0	10
WKM 2,5/15		**5 mm spacing Screw: M 2.5**	
WKM 2,5 F1/15			
WKM 2,5 F2/15			
WKM 2,5/2 S 2,8 1 K/15			
WKM 2,5 TP1 O/15			
WKM 2,5 TP2 O/15			
2pole	VB WKM 2,5/15-2	Z7.215.4227.0	50
3pole	VB WKM 2,5/15-3	Z7.215.4327.0	50
4pole	VB WKM 2,5/15-4	Z7.215.4427.0	50
5pole	VB WKM 2,5/15-5	Z7.215.4527.0	50
6pole	VB WKM 2,5/15-6	Z7.215.4627.0	50
60pole	VB WKM 2,5/15 M-60	Z7.215.4027.0	10
WK/3 S/IW/U		**6 mm spacing Screw: M 3**	
WK/3 - 6 S/IW/U			
WK/4 S/IW/U			
WK/4-8 S/IW/U			
2pole	VB WK/...S/IW/U-2	Z7.281.3227.0	10
3pole	VB WK/...S/IW/U-3	Z7.281.3327.0	10
4pole	VB WK/...S/IW/U-4	Z7.281.3427.0	10
5pole	VB WK/...S/IW/U-5	Z7.281.3527.0	10
6pole	VB WK/...S/IW/U-6	Z7.281.3627.0	10
20pole	VB WK/...S/IW/U-20	Z7.281.3027.0	10

Type		Part no.	Std. pack
WK 4/U		**6 mm spacing Screw: M 3**	
WK 4TKS D/U			
WK 4 3 S 1 K/U			
WK 4 3-6 S 1 K/U			
WK 4 5 S 2,8 1 K/U			
WK 4 3 S 1 K/IW/U			
WK 4 3-6 S 1 K/IW/U			
WK 4/U F1			
WK 4/U F2			
2pole	VB WK 4-2	Z7.281.0227.0	10
3pole	VB WK 4-3	Z7.281.0327.0	10
4pole	VB WK 4-4	Z7.281.0427.0	10
5pole	VB WK 4-5	Z7.281.0527.0	10
6pole	VB WK 4-6	Z7.281.0627.0	10
70pole	VB WK 4 M-70	Z7.281.0027.0	10
WK 4/D 1/2 U		**6 mm spacing Screw: M 3**	
WK 4/D 2/2 U			
2pole	VB WK 4 D..-2	Z7.281.6227.0	10
3pole	VB WK 4 D..-3	Z7.281.6327.0	10
4pole	VB WK 4 D..-4	Z7.281.6427.0	10
5pole	VB WK 4 D..-5	Z7.281.6527.0	10
6pole	VB WK 4 D..-6	Z7.281.6627.0	10
70pole	VB WK 4 D.. M-70	Z7.281.6027.0	10
WKM 4/15		**6 mm spacing Screw: M 3**	
WK 4/D EU			
WK 4 E/U for upper tier block			
WK 4 E/U GU ORANGE			
WK 4 E/U GO			
WK 4 E/U G2			
WK 4 E/U G1 ORANGE			
WK 4 E/U G-URL			
WK 4 E/U G-ULR			
WK 4 E/U VB SCHWARZ			
2pole	9215 - 2	Z7.210.3227.0	50
3pole	9215 - 3	Z7.210.3327.0	50
4pole	9215 - 4	Z7.210.3427.0	50
5pole	9215 - 5	Z7.210.3527.0	50
6pole	9215 - 6	Z7.210.3627.0	50
70pole	9215 M-70	Z7.210.3027.0	10

Type		Part no.	Std. pack
WK 4/3-6 SKO		**6 mm spacing Screw: M 3**	
2pole	2072/2	Z7.220.0227.0	50
3pole	2072/3	Z7.220.0327.0	50
4pole	2072/4	Z7.220.0427.0	50
5pole	2072/5	Z7.220.0527.0	50
6pole	2072/6	Z7.220.0627.0	50
70pole	2072/M	Z7.210.1027.0	10
WK/5 S/U		**6 mm spacing Screw: M 3**	
WK/5-10 S/U			
WK/3-6 S/U			
WK/4 S/U			
WK/4-8 S/U			
2pole	9703/6-2	Z7.211.0227.0	50
3pole	9703/6-3	Z7.211.0327.0	50
4pole	9703/6-4	Z7.211.0427.0	50
5pole	9703/6-5	Z7.211.0527.0	50
6pole	9703/6-6	Z7.211.0627.0	50
70pole	9703/6 M-70	Z7.211.0027.0	10

selos

Type	Part no.	Std. pack
WK 6/U	**8 mm spacing Screw: M 3.5**	
2pole VB WK 6-2	Z7.282.0227.0	10
3pole VB WK 6-3	Z7.282.0327.0	10
4pole VB WK 6-4	Z7.282.0427.0	10
5pole VB WK 6-5	Z7.282.0527.0	10
6pole VB WK 6-6	Z7.282.0627.0	10
40pole VB WK 6 M-40	Z7.282.0027.0	10
WK 10/Si U 5 x 20	**Spacing: 8 mm Screw: M 3**	
WK 10/Si U 5 x 25		
WK 10/Si U 5 x 30		
WK 10/Si U 6,3 x 32		
WK 10/Si UD		
2pole VB WK 10/Si-2	Z7.287.0227.0	10
3pole VB WK 10/Si-3	Z7.287.0327.0	10
4pole VB WK 10/Si-4	Z7.287.0427.0	10
5pole VB WK 10/Si-5	Z7.287.0527.0	10
6pole VB WK 10/Si-6	Z7.287.0627.0	10
30pole VB WK 10/Si M-30	Z7.287.0027.0	10
WKN 10/U	**10 mm spacing Screw: M 3.5**	
2pole VB WKN 10-2	Z7.283.6227.0	10
3pole VB WKN 10-3	Z7.283.6327.0	10
4pole VB WKN 10-4	Z7.283.6427.0	10
5pole VB WKN 10-5	Z7.283.6527.0	10
6pole VB WKN 10-6	Z7.283.6627.0	10
40pole VB WKN 10 M-40	Z7.283.6027.0	10
WKN 70/U	**Spacing: 24 mm Screw: M 6**	
2pole VB WKN 70-2	Z7.286.3227.0	5
3pole VB WKN 70-3	Z7.286.3327.0	5
4pole VB WKN 70-4	Z7.286.3427.0	5
5pole VB WKN 70-5	Z7.286.3527.0	5
6pole VB WKN 70-6	Z7.286.3627.0	5
WKN 150/U	**28 mm spacing Screw: M 8**	
2pole VB WKN 150-2	Z7.287.1227.0	5
3pole VB WKN 150-3	Z7.287.1327.0	5

Accessories
for DIN rail terminal blocks

selos

Single cover

for cross connector (jumper bar)

Type	Part no.	Std. pack	Type	Part no.	Std. pack
for terminal block type			**WK 4 E/U**		
			WKM 4/15		
WK 2,5/U			AD VB 4/15 GELB	04.326.2953.8	10
WK 2,5-4 KOI/U					
WK 2,5 E/U					
AD VB 2,5 GELB	04.326.2053.8	10	**WK6/U**		
			WK 6 ETK/U		
			AD VB 6 GELB	04.326.2253.8	10
WKM 2,5 F..					
WKM 2,5/15					
AD VB 2,5/15 GELB	04.326.3053.8	10	**WKN 10/U**		
			WKN 10 ETK/35		
			AD VB 10 GELB	04.326.2353.8	10
WK/3 S/..					
WK 4/U					
WK 4/U F..			**WK 10/Si U without marking facilities**		
WK 4 SL/35				04.312.2056.10	
WK 4 ETK/U					
WK 4/D..					
WK 4 TKS D/U			**WKN 35/U**		
WK/4 S/..			AD VB 35 GELB	04.326.2553.8	10
WK 4 3..					
WK 4 5..					
WK 5..			**WKN 70/U**		
AD VB 4 GELB	04.326.2153.8	10	AD VB 70 GELB	04.326.2653.8	10

selos

Partition plate

with marking facilities

Type	Part no.	Std. pack
for terminal block type		
WK 2,5/U		
TS 2,5 GELB	07.311.2053.8	10
WK/3...		
WK 4/U		
WK 4/...		
WK 4 3 ...		
WK 4 5 S		
WK 5		
TS 4 GELB	07.311.2153.8	10
WK 6/U		
TS 6 GELB	07.311.2253.8	10
WKM 2,5 F...		
TSM 2,5/15	07.311.2853.8	10
WKM 4/15		
TS 4/15 GELB	07.311.2953.8	10
Partition plate with cover		
WKN 16/U		
TSN AD 16 GELB	07.311.8553.8	10

Partition

with marking facilities

Type	Part no.	Std. pack
for TS 32 + 35	Z7.311.1753.0	
for TS 15	Z7.311.2753.0	10

Accessories for DIN rail terminal blocks

selos

Jumper combs, uninsulated

(for rated voltages of up to 50 V)

Type		Part no.	Std. pack
for terminal block type			
9785 U/10Ω bis 50 kΩ			
9785 U/10Ω-SPT bis 50 kΩ-SPT			
9786 U/12			
9786 U/12 D			
9786 U/12 D-G1			
9786 U/12 G 2-4 K			
9786 U/12 G 2-3 K			
1 mm thick			
2pole	VB 9786-2	07.253.0227.0	50
3pole	VB 9786-3	07.253.0327.0	50
4pole	VB 9786-4	07.253.0427.0	50

Type		Part no.	Std. pack
WK 4 E/U			
1 mm thick			
2pole	VB WK 4 E-2	07.255.2227.0	10
3pole	VB WK 4 E-3	07.255.2327.0	10
4pole	VB WK 4 E-4	07.255.2427.0	10
5pole	VB WK 4 E-5	07.255.2527.0	10
6pole	VB WK 4 E-6	07.255.2627.0	10
7pole	VB WK 4 E-7	07.255.2727.0	10
8pole	VB WK 4 E-8	07.255.2827.0	10
9pole	VB WK 4 E-9	07.255.2927.0	10
10pole	VB WK 4 E-10	07.255.3027.0	10
11pole	VB WK 4 E-11	07.255.3127.0	10
12pole	VB WK 4 E-12	07.255.3227.0	10
70pole	VB WK 4 EM-70	07.255.2027.0	10
1 mm thick, angled			
2pole	VBS WK 4 E-2	07.256.4227.0	10
3pole	VBS WK 4 E-3	07.256.4327.0	10
4pole	VBS WK 4 E-4	07.256.4427.0	10
5pole	VVBS WK 4 E-5	07.256.4527.0	10
6pole	VBS WK 4 E-6	07.256.4627.0	10
7pole	VBS WK 4 E-7	07.256.4727.0	10
8pole	VBS WK 4 E-8	07.256.4827.0	10
9pole	VBS WK 4 E-9	07.256.4927.0	10
10pole	VBS WK 4 E-10	07.256.5027.0	10
11pole	VBS WK 4 E-11	07.256.5127.0	10
12pole	VBS WK 4 E-12	07.256.5227.0	10

Type		Part no.	Std. pack
WK 4 TKM/U			
WK 4/U			
WK 4 TKS D/U			
WK 4 TKG-TRST/U			
0.5 mm thick			
2pole	VB 0,5 WK 4..-2	07.255.0227.0	50
3pole	VB 0,5 WK 4..-3	07.255.0327.0	50
4pole	VB 0,5 WK 4..-4	07.255.0427.0	50
5pole	VB 0,5 WK 4..-5	07.255.0527.0	10
6pole	VB 0,5 WK 4..-6	07.255.0627.0	10
7pole	VB 0,5 WK 4..-7	07.255.0727.0	50
8pole	VB 0,5 WK 4..-8	07.255.0827.0	10
9pole	VB 0,5 WK 4..-9	07.255.0927.0	50
10pole	VB 0,5 WK 4..-10	07.255.1027.0	50
11pole	VB 0,5 WK 4..-11	07.255.1127.0	50
12pole	VB 0,5 WK 4..-12	07.255.1227.0	10
70pole	VB 0,5 WK 4.. M-70	07.255.0027.0	10
1 mm thick			
2pole	VB 1 WK 4..-2	07.255.4227.0	10
3pole	VB 1 WK 4..-3	07.255.4327.0	10
4pole	VB 1 WK 4..-4	07.255.4427.0	10
5pole	VB 1 WK 4..-5	07.255.4527.0	10
6pole	VB 1 WK 4..-6	07.255.4627.0	10
7pole	VB 1 WK 4..-7	07.255.4727.0	10
8pole	VB 1 WK 4..-8	07.255.4827.0	10
9pole	VB 1 WK 4..-9	07.255.4927.0	10
10pole	VB 1 WK 4..-10	07.255.5027.0	10
11pole	VB 1 WK 4..-11	07.255.5127.0	10
12pole	VB 1 WK 4..-12	07.255.5227.0	10
70pole	VB 1 WK 4.. M-70	07.255.4027.0	10

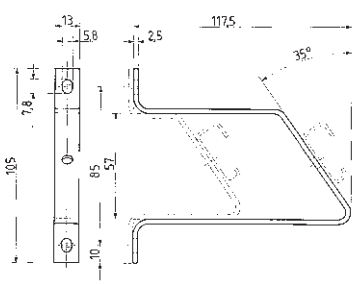

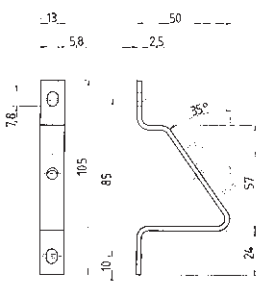

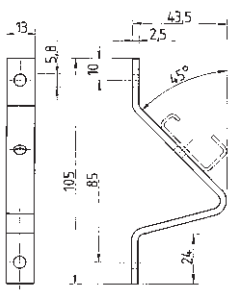

Angled support bracket

Type	Part no.	Std. pack	Type	Part no.	Std. pack	Type	Part no.	Std. pack
9018 D	Z5.516.2511.0	50	9018 H	Z5.516.2711.0	50	9018 N	Z5.516.2811.0	50

Included with these angled support brackets are oval head screws for panel mounting AM 5 x 8 DIN 85, nuts BM 5 DIN 439 and screws 5.3 DIN 433 for DIN rail mounting.

Material:
Brackets: flat steel, galvanically zinc-plated
Screws, nuts and washers
Steel, galvanically zinc-plated and dichromated

Accessories for DIN rail terminal blocks

selos

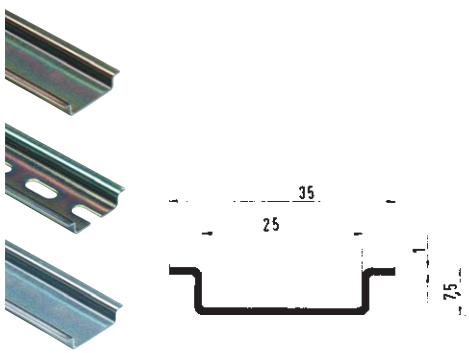

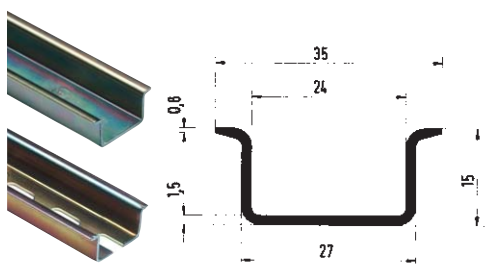

	Mounting rail 35 x 7.5 accord. to DIN EN 60715			Mounting rail 35 x 15 accord. to DIN EN 60715		
	Type	Part no.	Std. pack	Type	Part no.	Std. pack
Mounting rail						
1. Steel, galv. zinc-plated and dichromated,unslottedL = 2 m	35 x 27 x 7,5 EN 60715	98.300.0000.0	1	35 x 27 x 15 EN 60715	98.370.0000.0	1
Steel, galv. zinc-plated and dichromated,slotted L = 2 m	35 x 27 x 7,5 EN 60715 slotted	98.300.1000.0	1	35 x 27 x 15 EN 60715	98.370.1000.0	1
Steel,galv. zinc-plated and dichromated, slotted L = 1 m	35 x 27 x 7.5 EN 60715 slotted	98.300.1000.0M		35 x 27 x 15 EN 60715	98.375.1000.0	1
Steel,galv. zinc-plated and dichromated, slotted L = 2 m	35 x 27 x 7.5 EN 60715 slotted	98.300.1000.0L				
2. Steel, unplated unslotted L = 2 m	35 x 27 x 7,5 EN 60715 unplated	98.300.0010.0				
Steel, unplated slotted L = 2 m						
3. Steel, hot-galvanized unslotted L = 2 m						
Steel, hot-galvanized slotted L = 2 m						
4. E copper unslotted L = 2 m						
E copper slotted L = 2 m						
5. Aluminum unslotted L = 2 m	35 x 27 x 7.5 EN 60715	98.750.0000.0				
Aluminum slottted L = 1 m	35 x 27 x 7.5 EN 60715	98.800.1000.0				
6. Stainless Steel unslotted L = 2 m	35 x 27 x 7.5 EN 60715	98.330.0000.0		35 x 27 x 15 EN 60715	98.370.1001.0	1

selos

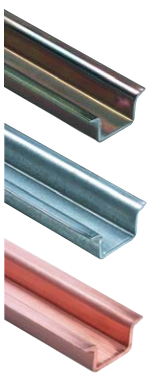

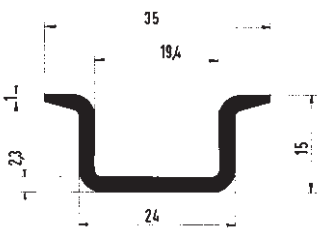

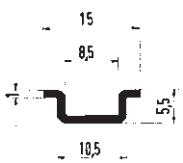

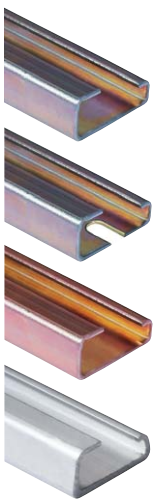

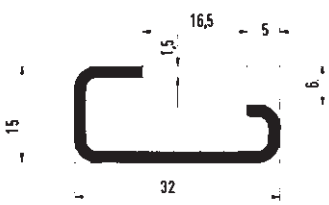

Mounting rail 35 x 15
accord. to DIN EN 60715

Type	Part no.	Std. pack
35 x 27 x 15 EN 60715	98.360.0000.0	1
35 x 24 x 15 EN 60715 ZN	98.360.0004.0	1
35 x 24 x 15 EN 60715 CU	98.380.0000.0	10

Mounting rail 15 x 5.5
accord. to DIN EN 60715

Type	Part no.	Std. pack
9021/15 x 5,5 EN 60715	98.090.0000.0	1
9021/15 x 5,5 EN 60715	98.090.0015.0	10

Mounting rail TS 32
accord. to DIN EN 60715

Type	Part no.	Std. pack
9006 EN 60715 G-32	98.190.0000.0	1
9006 EN 60715 G-32	98.190.1000.0	1
9006 E-CU	98.220.0000.0	10
9006 AL	98.210.0000.0	1

Accessories for DIN rail terminal blocks

selos

End clamp for TS 35
fixation with screws

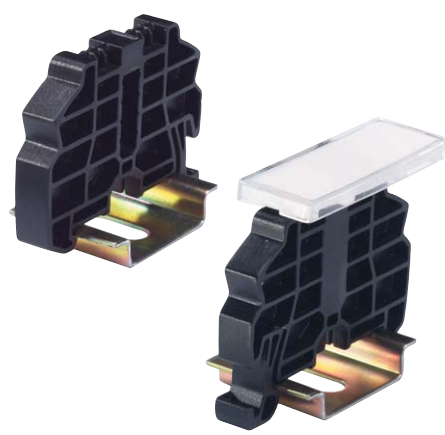

End clamp for TS 35
fixation without screws

		Type	Part no.	Std. pack	Type	Part no.	Std. pack
End clamp							
1. End clamp TS 35, with screw	8 mm wide	9708/2 S 35	Z5.522.8553.0	100			
2. End clamp TS 35, with screw with marking facilities for block assemblies	8/17.5 mm wide	9708/2 BS/35	69.920.0553.0	100			
3. End clamp for TS 35, screwless	8 mm wide				WEF 1/35	Z5.523.9353.0	100
4. End clamp for TS 35, screwless with marking facilities for terminal block assemblies	8/17.5 mm wide				WEF 1 BS/35	69.920.1053.0	100
5. End clamp TS 35	7.5 mm wide						
6. End clamp with U-foot	10 mm wide						

selos

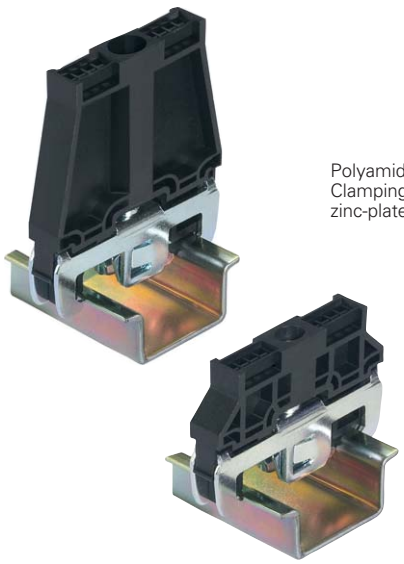

Polyamide 66/6
Clamping spring
zinc-plated steel

Polyamide 66/6
Clamping spring
zinc-plated steel

End clamp for TS 35

Type	Part no.	Std. pack
9708/3 S 35	Z5.523.5153.0	100

End clamp with U-foot

Type	Part no.	Std. pack
WE 2/U	Z5.523.5653.0	100
WE 1/U	Z5.523.5753.0	100

End clamp for TS 15

Type	Part no.	Std. pack
9208/S15	Z5.522.7553.0	100

Accessories
for DIN rail terminal blocks
selos

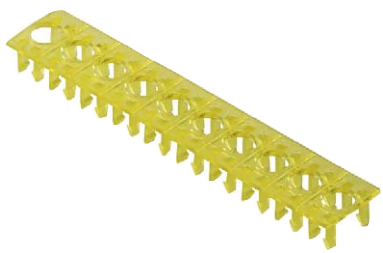

Cover over 10 blocks			Cover over 10 blocks Hole for test pin			Cover strip with warning symbol over 4 blocks		
			Type	Part no.	Std. pack	Type	Part no.	Std. pack
WK 2,5/U			**WK 2,5/U**			**WK 2,5/U**	04.343.4756.8	10
WK 2,5-4 KOI/U...			**WK 2,5-4 KO I/4**					
AD VB 5/10 E GELB	04.342.0556.8	10	AD VB 5/10 P GELB	04.342.3556.8	10			
						WK 4/U	04.343.4856.8	10
WK 4/U			**WK 4**					
AD VB 6/10	04.342.0656.8	10	AD VB 6/10 P GELB	04.342.3656.8	10	**WK 6/U**	04.343.4956.8	10
WK 10/U			**WK 4 E/U**			**WKN 10/U**	04.343.5056.8	10
AD VB 10/10 GELB	04.342.1056.8	10	AD VB 6/10 EP GELB	04.342.5656.8	10			
						WKN 16/U	04.343.5156.8	10
WK 4 E/U			**WK 6/U**					
AD VB 6/10 E GELB	04.342.2656.8	10	AD VB 8/10 P GELB	04.342.3856.8	10			
						WKN 35/U	04.343.5256.8	10
			WK 10/U					
			AD VB 10/10 P GELB	04.342.4056.8	10	**WKN 70/U**	04.343.5356.8	10
			WK 5... S/U			**WKN 150/U**	04.343.5456.8	10
			WK/3 S/..					
			WK/4 S/..					
			WK 4 3..					
			AD VB 6/10 P GELB	04.342.3656.8	10			

selos

Cover

for terminals from 95 - 240 mm²

Type	Part no.	Std. pack
for terminal block type		
RFK 1/185	Z7.409.5853.0	10
RFK 1/240	Z7.409.5853.0	10

Rapid mounting tool

for terminals up to 6 mm²

Type	Part no.	Std. pack
for terminal block type		
WK 2,5	05.594.5853.0	10
WK 4	05.594.5953.0	10
WK 6	05.594.6053.0	10
WK 4 E/U	05.582.8153.0	10
Tool picks up and mounts 10 terminals at a time.		
Mount 100 terminals in 90 seconds.		

Insulating housing for push-on connector

6.3 x 0.8 mm

Type	Part no.	Std. pack
Insulating housing for push-on connectors, color: yellow		
with marking field		
for 1.5 mm²	05.592.7553.0	2000
for 2.5 mm²	05.592.7653.0	2000
Insulating housing for push-on connectors, color: yellow		
for 2.5 mm² (can be inserted on the plug side)		
unmarked	05.582.8653.0	1
marked	05.582.8753.0	
(please indicate the marking)		

Accessories
for DIN rail terminal blocks

selos

Test plug stud bolt

Test socket			
WK 2,5			
WKN 2,5 E/U			
WK 2,5-3 D/U			
WK 4 TKMP 3/U			
WK 4 TKG-TRST P3/U			
WK 4 TKS D/U			
WK 2,5 U/8113 S/H			
WK 4/U F1			
WK 4/U F2			
WK 4			
WK 4/D1/2 U			
WK 4/D2/2 U			
WK 4/DEU			
WK 4 E.../U			
9290...	ST 2/2,3	Z5.553.2921.0	10
WK6	ST 2/4	Z5.553.3021.0	10
Test socket			
WK 2,5			
WKN 2,5 E/U			
WK 2,5-3 D/U			
WK 2,5-3 D SL			
WK 2,5 U/8113 S/H		05.509.6021.0	10
WK 4			
WK 4 TKS D/U			
WK 4/U F1			
WK 4/U F2		05.508.8921.0	10
WK 4/D1/2 U			
WK 4/D2/2 U			
WK 4/DEU			
WK 4 E.../U		05.508.8821.0	10

Shorting plug

Type	Part no.	Std. pack
Shorting plug		
WK 4 TKG-TRST P3/U		
WK 4/TKM.../U		
WK 4 TKS D/U		
WK 4/U F1		
WK 4/U F2		
9290...	Z5.553.9400.0	100

Test plug (tests off the current bar)

Type	Part no.	Std. pack
snap-on with		
locking lever		
for terminal block type		
WK 4	Z1.299.6153.0	10
WK 4 E/U	Z1.299.9053.0	10
Test plug without locking lever		
snap-on		
	Z1.299.8153.0	10

For marking systems see pages 178-179 and 200-202

selos

Test plug (test off the screw)

for WK 4 terminal blocks

with locking device and strain relief I

I_{min} = 10 mA
I_{max} = 3,5 A
U_{min} = 10 V
U_{max} = 250 V ~ 300 V⎓

Test plug with spring clamp connection

for WKF/WKC terminal blocks

PSWKC/F

		V	A
Solid 0,13 - 1,5 mm²	fine stranded 0,13 - 1,5 mm²	400 V	2,5

Type	Part no.	Std. pack
1pole		
without contact pin	Z1.299.9253.0	10
1pole		
without contact pin		
snap-on	Z1.299.9453.0	10
10pole without contact pins		
with locking device and strain relief		
marked 1 - 10		
PST 10 WK 4	Z1.299.9553.0	10
Contact pin	05.549.1200.0	1
For marking systems see pages 178-179 and 200-202		

Type	Part no.	Std. pack
1pole		
5mm pitch		
PSWKC/F	Z1.299.9753.0	
Blank for staggering terminals		
blocks	01.299.9753.0	
End plate and		
partition for 6 mm pitch		
ZP/AP PS	07.312.6053.0	10
One end plate per module is required for 6 mm pitch		
jumpered with		
at RM5	Z7.280.6227.0	
	to	
	Z7.280.7027.0	..
at RM6	Z7.261.1227.0	
	to	
	Z7.261.2027.0	
Screwdriver,		
uninsulated	06.502.4000.0	

Marking accessories for DIN rail terminal blocks

selos

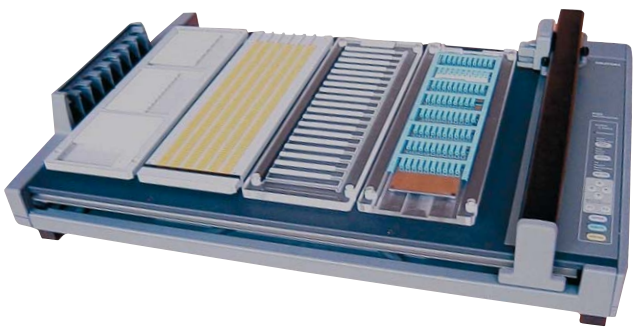

wiemarc

Type	Part no.	Std. pack
wiemarc CD	95.502.0501.0	

Discription

wiemarc is a Windows® based plotter software (Windows 95/98/ME/NT/XP) that is able to drive the following plotter systems:

– ***wieplot*** MUT (Mutoh system)
– Roland system
for custom printing on standard Wieland marking tags.

wiemarc makes preparing data for custom printing easier and faster than ever.
Intuitive handling allows printing of marking tag cards in single, multipole and series marking jobs.
Import of marking data from Excel files, text files and CAD/CAE programs is possible.
wiemarc data file management is user-friendly as printing data can be stored and found very easily in the file library.
wiemarc knows several special characters for electrical marking.
wiemarc is able to mark tags with upward or downward series, series steps can be chosen as well as leading or following characters. Multipole line printing is possible depending on tag size, number of digits and type size. Automatic adaptation of type size according to tag size and number of digits.

Requirements:
Pentium II PC or compatible, min. 200 MHz or higher, 64 MByte RAM, CD-ROM Drive, VGA Grafic Adaptor and Monitor

wiemarc supports Windows 95®, Windows 98®, Windows 2000®, Windows NT®, Windows ME® and Windows XP® Professional.

wieplot MUT

Description

wieplot MUT is a plotter system that uses ***wiemarc*** to interface with a PC, allowing custom printing on standard Wieland marking tags. These standard marking tags provide circuit identification for Wieland DIN rail mount terminal blocks, rectangular multipole connectors and WEB/WEG electronic housings.

Resolution:	0.025 mm
Accuracy:	+/- 0.1 mm
Power supply:	50/60 Hz, 180 – 264 V, 90 – 132 V Automatic switch over from 110 V to 230 V
Power rating:	About 0.3 A for 220 V
Approvals:	UL-UL478 (REV .4) CSA-22.2 No. 220 and VDE EN 60 950
Interference:	FCC Class B FCC Part 15 and VDE Class B
Dimensions:	620 mm x 425 mm x 106.5 mm
Weight:	6.4 kg
Interfaces:	RS-232 C and parallel (Centronics)

Type	Part no.	Std. pack
wieplot MUT	95.502.0601.0	
Standard template for all Wieland tags	95.502.0621.0	

selos

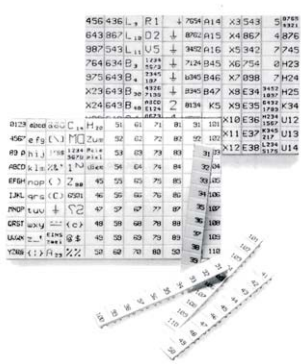

Accessories

	Type	Part no.	Std. pack
Accessory kit consists of plotter pen 0.25 mm,			
Ink-cartridge, permanent plotter pen 0.3 mm and			
cleaning set.			
Accessory kit (pen basic equipment)		95.502.0602.0	
Plotter pens for ROLAND and *wieplot* MUT			
systems:			
Plotter pen 0.18 mm		95.502.0118.0	
Plotter pen 0.25 mm		95.502.0125.0	
Plotter pen 0.35 mm		95.502.0135.0	
Plotter pen 0.50 mm		95.502.0150.0	
Plotter pen 0.70 mm		95.502.0170.0	
Plotter pen 1.00 mm		95.502.0100.0	
Permanent Plotter pen			
0.30 mm black		95.502.0230.0	
0.70 mm black		95.502.0270.0	
Permanent Plotter pen set			
consisting of black, red, blue, green pen.			
set 0.30 mm		95.502.0234.0	
set 0.70 mm		95.502.0274.0	
Hand pens			
Hand pen 0.25 mm		95.502.0425.0	
Hand pen 0.35 mm		95.502.0435.0	
Hand pen 0.50 mm		95.502.0450.0	
Hand pen 0.70 mm		95.502.0470.0	
Ink cartridge P1.0 5 x 1 ml		95.502.0199.0	
Cleaning set		95.502.0198.0	
Pen cleaner		95.502.0197.0	
***wiemarc*-Templates for Wieland cards:**			
for updating existing plotter systems to ***wiemarc***			
for ***marcom* 2000** and Phoenix CMS-System		95.502.0621.0	
for Weidmueller M-Print (Mutoh IP 220)		95.502.0622.0	
for murrplastic ACS (Roland DXY1150A) set high		95.502.0623.0	
for Wago System and murrplastic ACS set low		95.502.0624.0	

Type	Part no.	Std. pack
Marker Cards:		
110 tags per card		
9075 A/5/10/11	Z4.242.5053.0	
60 tags per card		
9705 AL/5/10/6	Z4.242.5153.0	
110 tags per card		
9705 A/6/10/11	Z4.242.6053.0	
60 tags per card		
9705 AL/6/10/6	Z4.242.6153.0	
84 tags per card		
9705 A/6.7/12/7	Z4.242.6753.0*	
36 tags per card		
9705 AL/6.7/12/7	Z4.242.6853.0*	
*must use multi-card template		
9705 A/8/10/7	Z4.242.8053.0*	

	9075A/ 5/10/11	9075AL/ 5/10/6	9075A/ 6/10/11	9075AL/ 6/10/6	9075A/ 6.7/12/7	9075AL/ 6.7/12/7	9075A/ 8/10/7
fasis							
WKF 2.5 ...	X	X					
WKF 4 ...			X	X			
WKF 6 ...					X	X*	X
WKF 10 ...	X*	X*					
WKF 16 ...			X*	X*			
WKMF 2.5 ...	X	X					
taris							
WKC 1 ...	X	X					
WKC 2.5 ...			X	X			
selos							
WK 2.5 ...	X	X					
WK 4 ...			X	X			
WK 6 ...					X+	X+	X
WKN 10 ...	X*	X*					
WKN 16 ...			X*	X*			
WKN 35 ...					X+	X+	X*
WKN 70 ...					X+	X+	
WKM 2.5 ...	X	X					
WKM 4 ...			X	X			
9220 A/6			X	X			
9700 A/5	X	X					
9700 A/6			X	X			
9700 A/8					X+	X+	X
9700 A/10	X*	X*					
9700 A/12			X*	X*			
9700 A/16					X+	X+	

* 2 strips needed for 10 terminals
\+ markers must be mounted individually
Note: the AL-markers are 69% longer that the A-markers AL/6.7 is twice as long to allow more printing area

selos

2.5 mm²/5 mm Width

Type		Part no.	Std. pack
Marking strips, unmarked			
9705 A/5/10		04.242.5053.0	25
Marking strips, marked			
9705 A/5/9 B	1 - 9	04.842.4953.0	25
9705 A/5/10 B*		04.842.5053.0	25
9705 A/5/10 B	1 - 10	04.845.0153.0	25
	11 - 20	04.845.0253.0	25
	21 - 30	04.845.0353.0	25
	31 - 40	04.845.0453.0	25
	41 - 50	04.845.0553.0	25
	51 - 60	04.845.0653.0	25
	61 - 70	04.845.0753.0	25
	71 - 80	04.845.0853.0	25
	81 - 90	04.845.0953.0	25
	91 - 100	04.845.1053.0	25
	⏚ (10 x)	04.855.0053.0	25
	⏚ (10 x)	04.855.0153.0	25
	+ (10 x)	04.855.0253.0	25
	– (10 x)	04.855.0353.0	25
	L1 (10 x)	04.855.0453.0	25
	L2 (10 x)	04.855.0553.0	25
	L3 (10 x)	04.855.0653.0	25
	PE (10 x)	04.855.0753.0	25
	SL (10 x)	04.855.3153.0	25
	N (10 x)	04.855.3253.0	25
	F1 (10 x)	04.855.0953.0	25
	F2 (10 x)	04.855.1053.0	25
L1, L2, L3, N, PE	(2 x)	04.855.0853.0	25
with enlarged marking area			
9705 AL/5/10		04.242.5153.0	25
*Custom marking upon request			

4 mm²/6 mm Width

Type		Part no.	Std. pack
Marking strips, unmarked			
9705 A/6/10		04.242.6053.0	25
Marking strips, marked			
9705 A/6/9 B	1 - 9	04.842.5953.0	25
9705 A/6/10 B*		04.842.6053.0	25
9705 A/6/10 B	1 - 10	04.846.0153.0	25
	11 - 20	04.846.0253.0	25
	21 - 30	04.846.0353.0	25
	31 - 40	04.846.0453.0	25
	41 - 50	04.846.0553.0	25
	51 - 60	04.846.0653.0	25
	61 - 70	04.846.0753.0	25
	71 - 80	04.846.0853.0	25
	81 - 90	04.846.0953.0	25
	91 - 100	04.846.1053.0	25
	⏚ (10 x)	04.856.0053.0	25
	⏚ (10 x)	04.856.0153.0	25
	+ (10 x)	04.856.0253.0	25
	– (10 x)	04.856.0353.0	25
	L1 (10 x)	04.856.0453.0	25
	L2 (10 x)	04.856.0553.0	25
	L3 (10 x)	04.856.0653.0	25
	PE (10 x)	04.856.0753.0	25
	SL (10 x)	04.856.3153.0	25
	N (10 x)	04.856.3253.0	25
	F1 (10 x)	04.856.0953.0	25
	F2 (10 x)	04.856.1053.0	25
L1, L2, L3, N, PE	(2 x)	04.856.0853.0	25
with enlarged marking area			
9705 AL/6/10		04.242.6353.0	25
*Custom marking upon request			

10 mm²/10 mm Width

16 mm²/12 mm Width

35 mm²/16 mm Width

Type	Part no.	Std. pack
10 mm²/10 mm Width		
marked for 5 blocks (every 2nd tag) *		
9705 A/5/10/5 B	04.842.5553.0	25
16 mm²/12 mm Width		
marked for 5 blocks (every 2nd tag) *		
9705 A/6/10/5 B	04.842.6553.0	25
35 mm²/16 mm Width		
marked for 5 blocks (every 2nd tag) *		
9705 A/8/10/5 B	04.842.8553.0	25
* indicate required marking with part no.		

Marking accessories for DIN rail terminal blocks

selos

Tear-off marking strip with 10 marking tags

Material: Polyamide 66/6 white, marking in black Marking per strip		Type	Part no.	Stand. pack
unmarked		9704 A	04.241.1150.0	25
marked with the same number	1 1 1 1 1 1 1 1 1 1	9704 A/1 B	04.841.1150.0	25
	2 2 2 2 2 2 2 2 2 2	9704 A/2 B	04.841.1250.0	25
	3 3 3 3 3 3 3 3 3 3	9704 A/3 B	04.841.1350.0	25
	4 4 4 4 4 4 4 4 4 4	9704 A/4 B	04.841.1450.0	25
	5 5 5 5 5 5 5 5 5 5	9704 A/5 B	04.841.1550.0	25
	6 6 6 6 6 6 6 6 6 6	9704 A/6 B	04.841.1650.0	25
	7 7 7 7 7 7 7 7 7 7	9704 A/7 B	04.841.1750.0	25
	8 8 8 8 8 8 8 8 8 8	9704 A/8 B	04.841.1850.0	25
	9 9 9 9 9 9 9 9 9 9	9704 A/9 B	04.841.1950.0	25
	0 0 0 0 0 0 0 0 0 0	9704 A/0 B	04.841.2050.0	25
marked with consecutive numbers	1 2 3 4 5 6 7 8 9 0	9704 A/1-0 B	04.841.2150.0	25
marked with the same symbols	+ + + + + + + + + +	9704 A/+ B	04.841.7450.0	25
	– – – – – – – – – –	9704 A/– B	04.841.7550.0	25
	/ / / / / / / / / /	9704 A// B	04.841.7650.0	25
	. . . .	9704 A/. B	04.841.7750.0	25
1 set of the same numbers = 10 x 25 strips = 2500 numbers	1 1 1 ... 0 0 0	A to Z (capital letters)	04.841.9050.0	1
1 set of capital letters = 26 x 25 strips = 6500 letters	A A A ... Z Z Z	a to z (small letters)	04.841.9150.0	1
1 set of small letters = 26 x 25 strips = 6500 letters	a a a ... z z z		04.841.9250.0	1

Marking Accessories
for DIN rail terminal blocks

selos

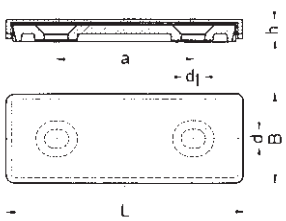

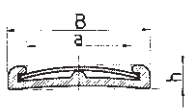

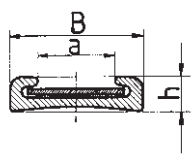

Marking tags

The marking tags are delivered unassembled!

Type	Part no.	Std. pack
Version N:		
Material:		
special photostable plastic,		
transparent, marking card in white		
300 B	90.100.1154.0	100
300	90.100.0554.0	100
301	90.100.0754.0	100
303	90.100.0854.0	100
305	90.100.1054.0	100
Version K:		
Marking cards in perforated		
sheets for marking on the		
type writer		
300 BK	90.100.1354.0	100
300 K	90.100.1254.0	100
301 K	90.100.1454.0	100
303 K	90.100.1554.0	100
305 K	90.100.1654.0	100

L	B	h	a	e	d	d_1	l_1	b
30	17,5	4	11	3,6	4,6	27	14,5	
45	17,5	4	26	3,6	4,6	42	14,5	
60	30	7	36,5	3,6	4,6	54,5	24,5	
90	40	8	55	3,6	4,6	84	34	
140	55	8	100	3,6	4,6	134	49	

Marking strip

Type	Part no.	Std. pack
Available in Polyvinylchlorid (PVC) black and ivory,		
1 m long		
with marking card (white) and plastic foil cover		
or with plastic foil, one side roughened, white opaque		
319/13,5 K elf.	90.800.1055.8	10
319/17,5 K elf.	90.800.2055.8	10
319/13,5 K schwarz	90.800.1055.1	10
319/17,5 K schwarz	90.800.2055.1	10

L	B	h	a	e	d	d_1	l_1	b
1000	20	4	13,5					
1000	24	4	17,5					
1000	30,5	4	23,5					
1000	20	4	13,5					
1000	24	4	17,5					
1000	30,5	4	23,5					

Marking strip

Type	Part no.	Std. pack
Available in Polyvinylchloride,		
1 m long		
with marking card and plastic foil cover		
315 GK	90.810.3055.0	10
315 GC	90.811.3055.0	10
End piece		
315 E	05.590.0052.0	100

L	B	h	a	e	d	d_1	l_1	b
1000	16	4	9					
1000	16	4	9					

selos

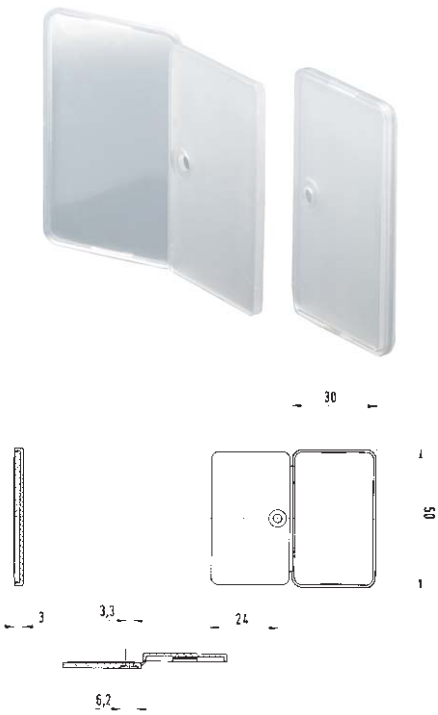

Marking tag

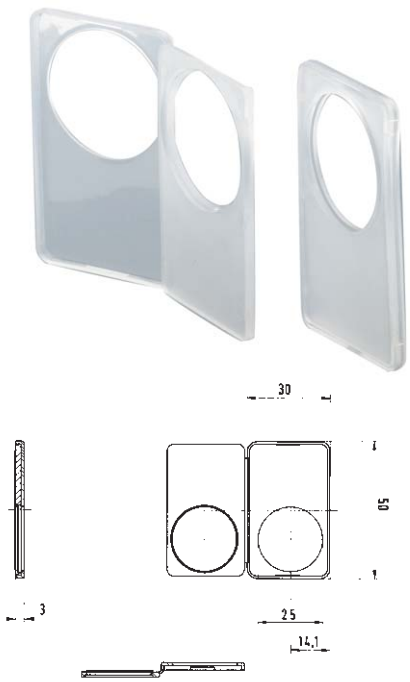

Marking tag

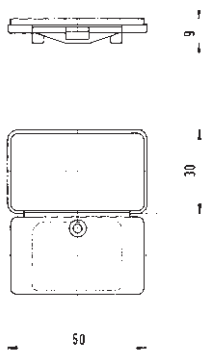

Marking tag

Design	Part no.	Std. pack
Marking tag	Z4.210.0652.0	100
with adhesive tape		
Marking tag	04.210.0652.0	100
without adhesive tape		
Marking card		
white for marking tags		
(1 sheet = 30 single tags)		
	04.019.0889.0	1
Aluminum		
tag, self-adhesive	05.584.9489.0	1

Type	Part no.	Std. pack
Push button tag	04.210.0752.0	100
Marking card		
white for marking tags		
(1 sheet = 30 single tags)		
	04.019.0889.0	1
Aluminum		
tag, self-adhesive	05.584.9489.0	1

Type	Part no.	Std. pack
Marking tag	Z4.210.1652.0	100
with carrier		
Marking card		
white for marking tags		
(1 sheet = 30 single tags)		
	04.019.0889.0	1
Aluminum		
tag, self-adhesive	05.584.9489.0	1

DIN rail terminal blocks with screw clamp technology, type *9700 A.. S35*

selos CLASSIC LINE

Standard terminal blocks

	2.5 mm² (12 AWG)	4 mm² (10 AWG)
Feed-through blocks		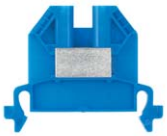
Neutral disconnect blocks		
Ground blocks		

10 mm² (8 AWG)	16 mm² (6 AWG)	25 mm² (4 AWG)	35 mm² (2 AWG)

PEN assembly block

35 mm²

DIN rail terminal blocks with screw clamp connection, type *9700 A.. S35*

selos CLASSIC LINE

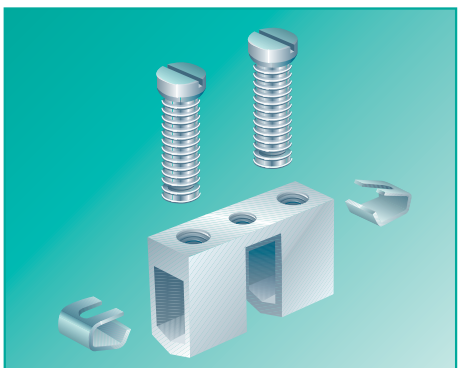

9700 A S35 offers...

❒ **Screw clamp technology**
made from nickel-plated copper alloy

Application advantages

→ Low contact resistance
– Clamping body has similar physical and chemical characteristics as the conductor
– One piece clamping body/current bar

→ **Connection of Aluminum Conductors**
– Clamping body is able to penetrate aluminium oxide

→ **Steel free Clamping Body**
– High corrosion resistance

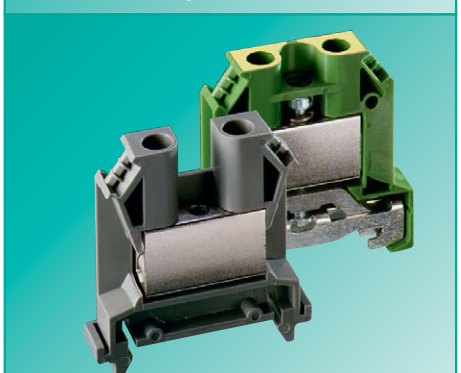

❒ Connection range
12-2 AWG

→ Wire gauge from 18-2 AWG solid, stranded and fine stranded conductors can be terminated without ferrules.

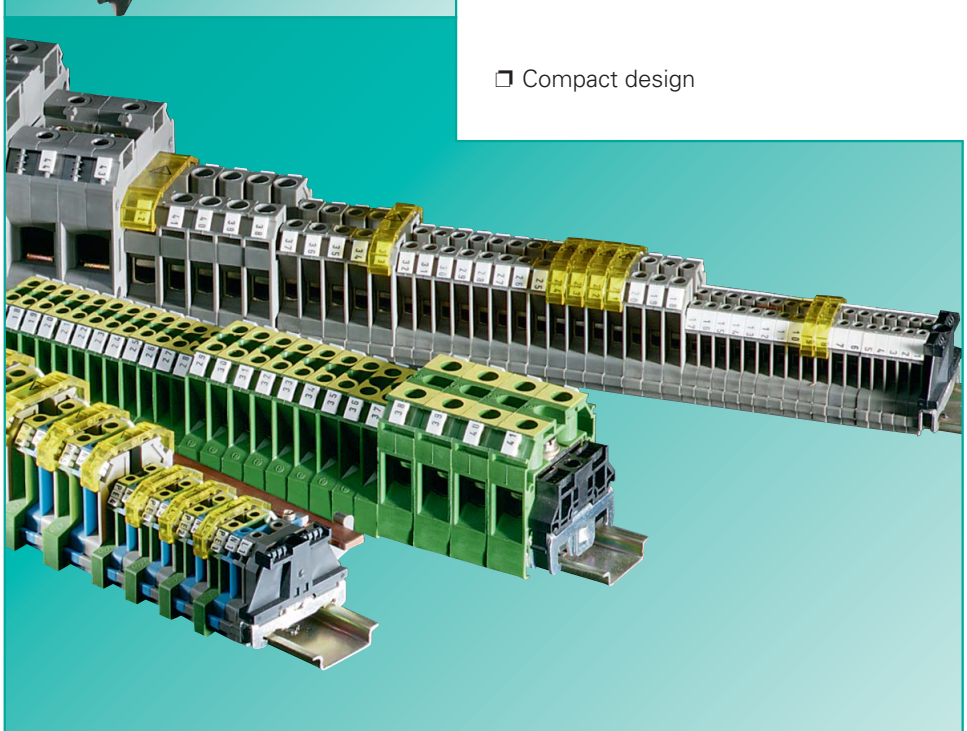

❒ Compact design

→ **Save space on the rail**
– ***selos*** Classic Line offers higher density due to the wire size and terminal block pitch.

Connection range	Pitch
12 AWG	5 mm
10 AWG	6 mm
8 AWG	8 mm
6 AWG	10 mm
4 AWG	12 mm
2 AWG	16 mm

→ ***selos*** CLASSIC LINE
– Mounting on TS 35 DIN Rail (DIN 60 715)
– Product range:
Feed-through terminals
Ground terminals
Neutral Bus terminals
PEN terminals

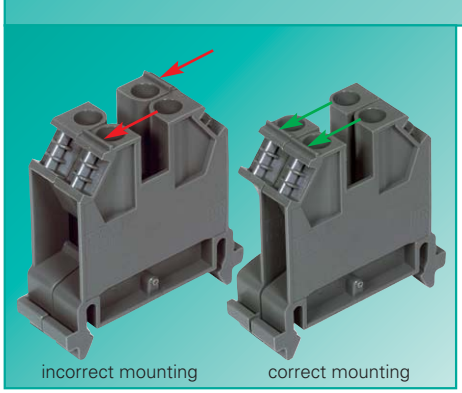

❒ **Function and Installation safety**

→ Incorrect mounting indicator on the top of terminal
– terminals mounted incorrectly are easily identified and fixed.

selos

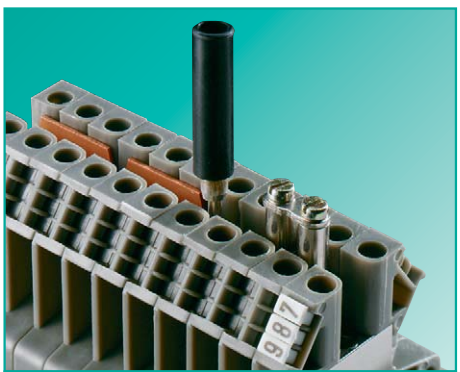

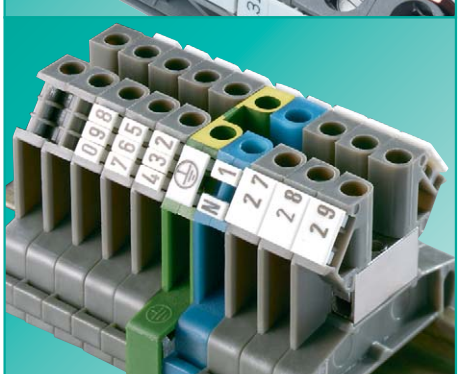

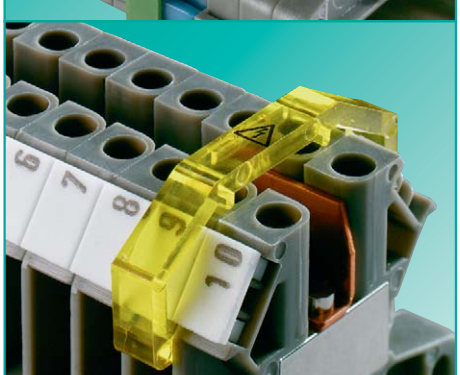

Test plugs and shorting plugs

- ❒ Test sockets which accept the test plugs and the shorting plugs are installed in the threaded slot on the carrying bar.
- ❒ Modular test plugs are available to create test plug modules greater than two poles.

Switchable connecting links (SCL)

- ❒ For easy commoning and disconnecting two terminals

Jumper bar

- ❒ Allow easy commoning of potential
- ❒ Available in pre-cut 2-6 pole versions
- ❒ Available in cut to length version in 50, 70, or 90 pole versions depending on the terminal block
- ❒ End plates and partitions are required to mantain creepage distances.

Marking systems

- ❒ Single marking tags in 5, 6, or 8mm pitch
- ❒ Marking strips (10 tags) to sanp on 10 terminals at the same time
- ❒ Tear-off marking strips for marking up to 3 digits per terminal block
- ❒ Custom marking available upon request

Cover with warning symbol

- ❒ For terminals that remain live after the mains have been switched off (VDE 0113)
- ❒ Can be removed with a screwdriver

DQS certificates for all company divisions

- ❒ Quality standard as per DIN ISO 9001 in Development, Production, Assembly
- ❒ Continued control of the quality standard by means of regular internal and external quality audits
- ❒ Compatible with certificates of other countries:
  - BSI Certificate, Great Britain
  - SQS Certificate, Switzerland
  - Aib-Vincotte Certificate, Belgium
  - ÖQS Certificate, Austria

Material

❒ Metal components

Special alloys and surface treatments offer low contact resistance and a gas tight connection

Clamping body:	nickel plated copper alloy
Screws:	nickel plated copper alloy
Jumper bar:	copper
Test socket:	copper alloy, plated
SCL:	copper alloy

❒ Insulation housing

Polyamide has excellent electrical, chemical and mechanical characteristics

Insulating housing:	Polyamide 66/6
Tracking current resistance:	CTI 600
Flammability class::	UL 94 V-2

(also see section ***facts*** & DATA)

You can use our **wieplan** software to configure your own terminal block assemblies
(see page 10/11).

Note:

The information regarding cross sectional area and connection types pertains to unprepared wires without ferrules.

The voltage ratings apply to the terminals in their intended application. When different products are mounted adjacent to each other, the proper isolation distances must be adhered to. **For this purpose, Wieland** offers a large selection of appropriate accessories.

A detailed description of technical data, the standards' requirements, and the application conditions can be found in part ***facts*** & DATA.

DIN rail terminal blocks with screw technology, type 9700 A.. S35

selos CLASSIC LINE

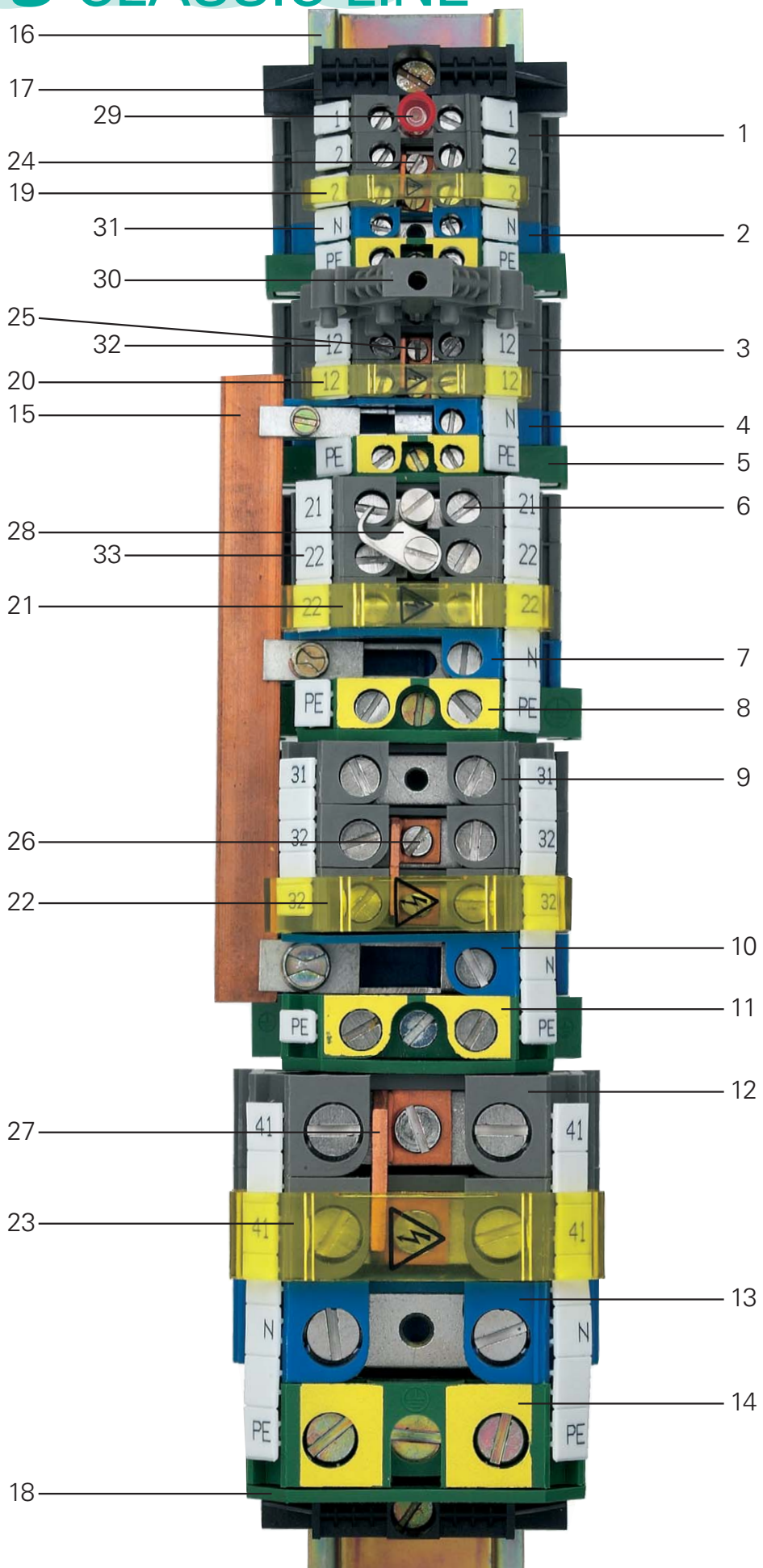

selos

Item	Description	Type	Part number
1	Feed through block	9700 A/5 S35	54.003.7553.0
2	Feed-through block, BLUE	9700 A/5 S35 BLAU	54.003.7553.6
3	Feed through block	9700 A/6 S35	54.004.7553.0
4	Neutral disconnect block	9700 A/6 ETK S35	54.004.7753.0
5	Ground block	9700 A/6 SL2 S35	56.004.9053.0
6	Feed through block	9700 A/8 S35	54.010.7553.0
7	Neutral disconnect block	9700 A/8 ETK S35	54.010.7753.0
8	Ground block	9700 A/8 SL2 S35	56.010.9053.0
9	Feed through block	9700 A/10 S35	54.016.7553.0
10	Neutral disconnect block	9700 A/10 ETK S35	54.016.7753.0
11	Ground block	9700 A/10 SL2 S35	56.016.9053.0
12	Feed through block	9700 A/16 S35	54.035.7553.0
13	Feed-through block, BLUE	9700 A/16 S35 BLAU	54.035.7553.6
14	Ground block	9700 A/16 SL2 S35	56.035.9053.0
15	Busbar 10 x 3	9813 M Sn	98.290.1000.0
16	Mounting rail	35 x 27 x 7,5	98.300.0000.0
17	End clamp for TS 35 with screw	9708/2 S35	Z5.522.8553.0
18	End plate, GREEN	9701/16 SL	07.312.0353.0
19	Warning cover	2,5 mm^2	04.325.1656.0
20	Warning cover	4 mm^2	04.325.1056.0
21	Warning cover	10 mm^2	04.325.1156.0
22	Warning cover	16 mm^2	04.325.1256.0
23	Warning cover	35 mm^2	04.325.1456.0
24	Cross connector with screws, uninsulated	9703/5-2	Z7.215.0227.0
25	Cross connector with screws, uninsulated	9703/6-2	Z7.211.0227.0
26	Cross connector with screws, uninsulated	9703/10-2	Z7.214.0227.0
27	Cross connector with screws, uninsulated	9703/16-2	Z7.216.0227.0
28	Switchable connecting link, complete	10 mm^2	Z7.269.3023.0
29	Test plug with insulated handle, Ø 2.3 mm	ST 2/2,3	Z5.553.2921.0
	Stud bolt	2,5 mm^2	05.508.8921.0
30	Test plug with locking lever		Z1.299.7153.0
31	Marking tag	9705 A	04.842.0850.0
32	Marking strip	9705 A/6/10 B	04.842.6053.0
33	Marking strip	9705 A/8/10 B	04.842.8053.0

Feed-through blocks
with screw connection, type *9700 A.. S35*

selos CLASSIC LINE

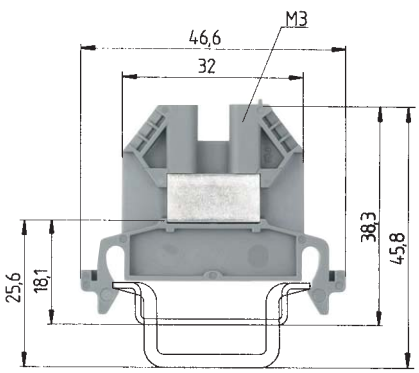

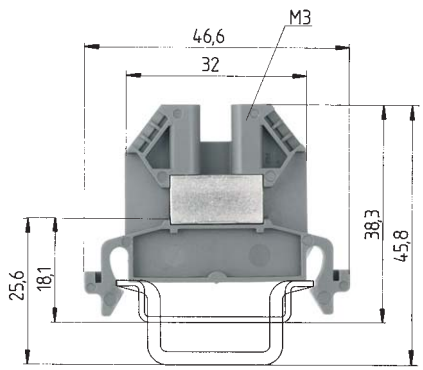

		9700 A/5 S35				9700 A/6 S35			
		fine stranded	solid	V	A	fine stranded	solid	V	A
DIN VDE 0611 Teil 3/11.98		0.5 – 2.5 mm²	0.5 – 4 mm²	800 V/8 kV/3	24	0.5 – 4 mm²	0.5 – 6 mm²	800 V/8 kV/3	32
UL-ratings	field/factory wiring	No. 18-12	AWG	600 V	20/30	No. 18-10	AWG	600 V	30/30
CSA ratings		No. 22-12	AWG	600 V	25	No. 22-10	AWG	600 V	35
Width	Wire strip length	5 mm			9 mm	6 mm			9 mm
Approvals									

		Type	Part no.	Std. pack	Type	Part no.	Std. pack
Feed-through terminal	Color: gray	9700 A/5 S35	54.003.7553.0	100	9700 A/6 S35	54.004.7553.0	100
Feed-through terminal, (Ex)i	Color: blue	9700 A/5 S35 BLAU	54.003.7553.6	100	9700 A/6 S35 BLAU	54.004.7553.6	100
Neutral disconnect block	Color: blue						
Ground block	Color: green-yellow						
PEN terminal	Color: green/yellow - blue						
Accessories							
1. Mounting rail TS 35, DIN rail, 7.5 mm high	L = 2 m	35 x 27 x 7,5 EN 60715	98.300.0000.0	1	35 x 27 x 7,5 EN 60715	98.300.0000.0	1
Mounting rail TS 35, DIN rail 15 mm high	L = 2 m	35 x 27 x 15 EN 60715	98.360.0000.0	1	35 x 27 x 15 EN 60715	98.360.0000.0	1
2. End clamp TS 35, with screw	8 mm wide	9708/2 S35	Z5.522.8553.0	100	9708/2 S35	Z5.522.8553.0	100
3. End plate	Color: gray	9701/6	07.310.3153.0	10	9701/6	07.310.3153.0	10
	Color: blue	9701/6 BLAU	07.310.3153.6	10	9701/6 BLAU	07.310.3153.6	10
	Color: green						
4. Partition plate	Color: gray	9702/6	07.310.3453.0	10	9702/6	07.310.3453.0	10
	Color: blue	9702/6 BLAU	07.310.3453.6	10	9702/6 BLAU	07.310.3453.6	10
5. Jumper bar with screws,	2pole	9703/5-2	Z7.215.0227.0	50	9703/6-2	Z7.211.0227.0	50
E-Cu, uninsulated	3pole	9703/5-3	Z7.215.0327.0	50	9703/6-3	Z7.211.0327.0	50
	4pole	9703/5-4	Z7.215.0427.0	50	9703/6-4	Z7.211.0427.0	50
	5pole	9703/5-5	Z7.215.0527.0	50	9703/6-5	Z7.211.0527.0	
	6pole	9703/5-6	Z7.215.0627.0	50	9703/6-6	Z7.211.0627.0	50
Cut-to-order strip	0.6 m long	9703/5-M	Z7.215.0027.0	10	9703/5-M	Z7.211.0027.0	10
6. Switchable connecting link			Z7.269.3523.0	50		Z7.269.2923.0	50
7. Stud bolt for test plug		9011 D	05.508.8921.0	10	9011 C	05.508.8821.0	10
8. Test plug		ST 2/2,3	Z5.553.2921.0	10	ST 2/2,3	Z5.553.2921.0	10
9. Cover with warn. symbol over 1 block	Color: yellow		04.325.1656.0	10		04.325.1056.0	10
10. Busbar							
E-Cu, 10 x 3 mm, tin-plated, I_N = 140 A	L = 1 m						
E-Cu, 10 x 3 mm, unplated, I_N = 140 A	L = 1 m						
11. Connector clamps for busbar							
25 mm²	11.1 mm wide						
35 mm² 14.3 mm wide							
12. Busbar support	6 mm wide						
13. Rapid mounting tool			05.593.5853.0	10		05.593.4153.0	
For marking accessories see pages 178-179 and 200/202		*CL I, ZN1, AExe II			*CL I, ZN1, AExe II		

selos

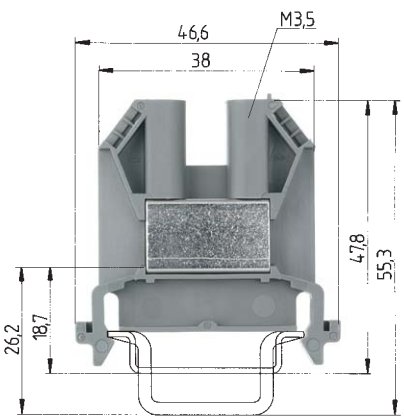

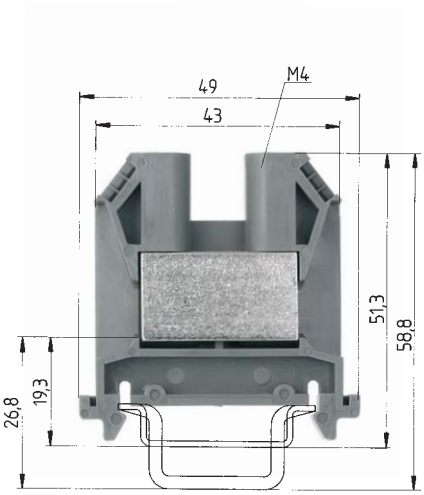

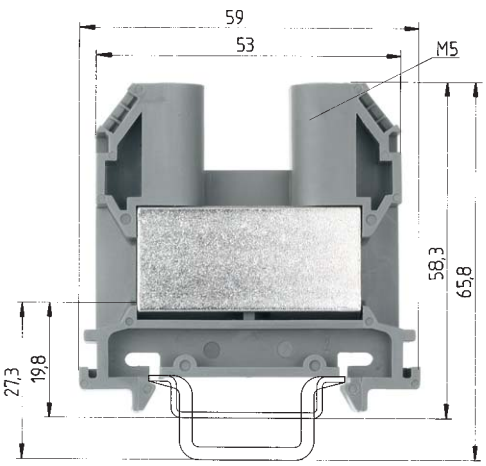

9700 A/8 S35

fine stranded	solid/stranded	V	A
1 – 10 mm²	1 – 10 mm²	800 V/8 kV/3	57
No. 18-8	AWG	600 V	50/50
No. 18-8	AWG	600 V	55
8 mm			12 mm

Type	Part no.	Std. pack
9700 A/8 S 35	54.010.7553.0	100
9700 A/8 S 35 BLAU	54.010.7553.6	100
35 x 27 x 7,5 EN 60715	98.300.0000.0	1
35 x 27 x 15 EN 60715	98.360.0000.0	1
9708/2 S 35	Z5.522.8553.0	100
9701/8	07.310.3253.0	10
9701/8 BLAU	07.310.3253.6	10
9702/8	07.310.3553.0	10
9702/8 BLAU	07.310.3553.6	10
9703/8-2	Z7.212.0227.0	50
9703/8-3	Z7.212.0327.0	50
9703/8-4	Z7.212.0427.0	50
9703/8-5	Z7.212.0527.0	50
9703/8-6	Z7.212.0627.0	50
	Z7.269.3023.0	50
9011 B	05.508.3221.0	10
ST 2/4	Z5.553.3021.0	10
	04.325.1156.0	10
	05.593.5953.0	10
*CL I, ZN1, AExe II		

9700 A/10 S35

fine stranded	solid/stranded	V	A
1.5 – 16 mm²	1.5 – 16 mm²	800 V/8 kV/3	76
No. 18-6	AWG	600 V	65/70
No. 16-6	AWG	600 V	70
10 mm			15 mm

Type	Part no.	Std. pack
9700 A/10 S 35	54.016.7553.0	100
9700 A/10 S 35 BLAU	54.016.7553.6	100
35 x 27 x 7,5 EN 60715	98.300.0000.0	1
35 x 27 x 15 EN 60715	98.360.0000.0	1
9708/2 S 35	Z5.522.8553.0	100
9701/10	07.310.3953.0	10
9701/10 BLAU	07.310.3953.6	10
9702/10	07.310.4053.0	10
9702/10 BLAU	07.310.4053.6	10
9703/10-2	Z7.214.0227.0	50
9703/10-3	Z7.214.0327.0	50
9703/10-4	Z7.214.0427.0	50
9703/10-5	Z7.214.0527.0	50
9703/10-6	Z7.214.0627.0	50
	Z7.269.3123.0	50
9011 A	05.508.3121.0	10
ST 2/4	Z5.553.3021.0	10
	04.325.1256.0	10
*CL I, ZN1, AExe II		

9700 A/12 S35

fine stranded	solid/stranded	V	A
2.5 – 25 mm²	2.5 – 35 mm²	800 V/8 kV/3	101
No. 14- 4	AWG	600 V	85/100
No. 14- 4	AWG	600 V	100
12 mm			20 mm

Type	Part no.	Std. pack
9700 A/12 S 35	54.025.7553.0	50
9700 A/12 S 35 BLAU	54.025.7553.6	50
35 x 27 x 7,5 EN 60715	98.300.0000.0	1
35 x 27 x 15 EN 60715	98.360.0000.0	1
9708/2 S 35	Z5.522.8553.0	100
9701/12	07.310.3353.0	10
9701/12 BLAU	07.310.3353.6	10
9702/12	07.310.3653.0	10
9702/12 BLAU	07.310.3653.6	10
9703/12-2	Z7.213.0227.0	50
9703/12-3	Z7.213.0327.0	50
9703/12-4	Z7.213.0427.0	50
9703/12-5	Z7.213.0527.0	50
9703/12-6	Z7.213.0627.0	50
	Z7.269.3223.0	50
	05.508.6521.0	10
ST 2/4	Z5.553.3021.0	10
	04.325.1356.0	10
*CL I, ZN1, AExe II		

Feed-through blocks
with screw connection, type *9700 A.. S35*

selos CLASSIC LINE

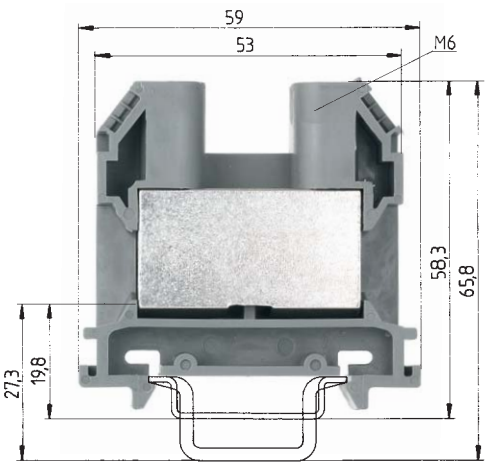

9700 A/16 S35

		fine stranded	solid/stranded	V	A
DIN VDE 0611 Teil 3/11.98		2.5 – 35 mm²	2.5 – 50 mm²	800 V/8 kV/3	125
UL-ratings	field/factory wiring	No. 12-2 AWG		600 V	115/130
CSA ratings		No. 12-2 AWG		600 V	125
Width	Wire strip length	16 mm			20 mm
Approvals					

		Type	Part no.	Std. pack
Feed-through block	Color: gray	9700 A/16 S 35	54.035.7553.0	50
Feed-through block, (Ex)i	Color: blue	9700 A/16 S 35 BLAU	54.035.7553.6	50
Neutral disconnect block	Color: blue			
Ground block	Color: green-yellow			
PEN terminal	Color: green/yellow - blue			
Accessories				
1. Mounting rail TS 35, DIN rail, 7.5 mm high	L = 2 m	35 x 27 x 7,5 EN 60715	98.300.0000.0	1
Mounting rail TS 35, DIN rail 15mm high	L = 2 m	35 x 24 x 15 EN 60715	98.360.0000.0	1
2. End clamp for TS 35, with screw	8 mm wide	9708/2 S35	Z5.522.8553.0	100
3. End plate	Color: gray	9701/12	07.310.3353.0	10
	Color: blue	9701/12 BLAU	07.310.3353.6	10
	Color: green			
4. Partition plate	Color: gray	9702/12	07.310.3653.0	10
	Color: blue	9702/12 BLAU	07.310.3653.6	10
5. Jumper bar with screws,	2pole	9703/16-2	Z7.216.0227.0	50
E-Cu, uninsulated	3pole	9703/16-3	Z7.216.0327.0	50
	4pole	9703/16-4	Z7.216.0427.0	50
	5pole	9703/16-5	Z7.216.0527.0	50
	6pole	9703/16-6	Z7.216.0627.0	50
Cut-to-order strip	0.6 m long			
6. Switchable connecting link			Z7.269.3423.0	50
7. Stud bolt for test plug			05.508.6521.0	10
8. Test plug		ST 2/4	Z5.553.3021.0	10
9. Cover with warn. symbol over 1 block	Color: yellow		04.325.1456.0	10
10. Busbar				
E-Cu, 10 x 3 mm, tin-plated, I_N = 140 A	L = 1 m			
E-Cu, 10 x 3 mm, unplated, I_N = 140 A	L = 1 m			
11. Connector clamps for busbar				
25 mm²	11.1 mm wide			
35 mm²	14.3 mm wide			
12. Busbar support	6 mm wide			
13. Rapid mounting tool				
For marking accessories see pages 178-179 and 200/202		*CL I, ZN1, AExe II		

Neutral disconnect blocks with screw terminal, type *9700 A.. S35*

selos CLASSIC LINE

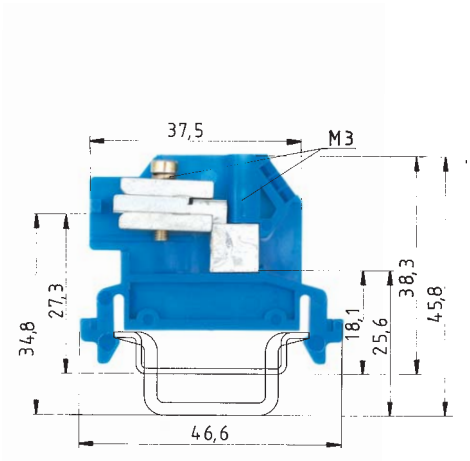

*)Install in grounded systems 690/400 V

9700 A/6 ETK S35

fine stranded	solid	V	A
0.5 – 4 mm²	0.5 – 6 mm²	400 V/6 kV/3*)	25

6 mm 9 mm

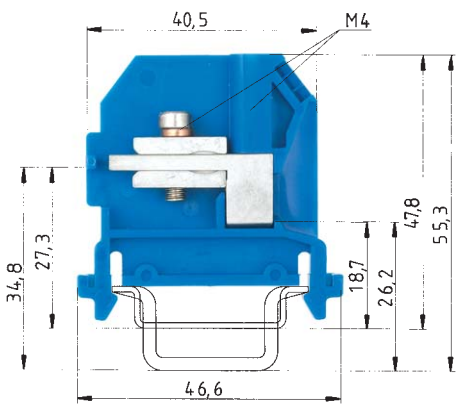

*)Install in grounded systems 690/400 V

9700 A/8 ETK S35

fine stranded	solid/stranded	V	A
1 – 10 mm²	1 – 10 mm²	400 V/6 kV/3*)	40

8 mm 12 mm

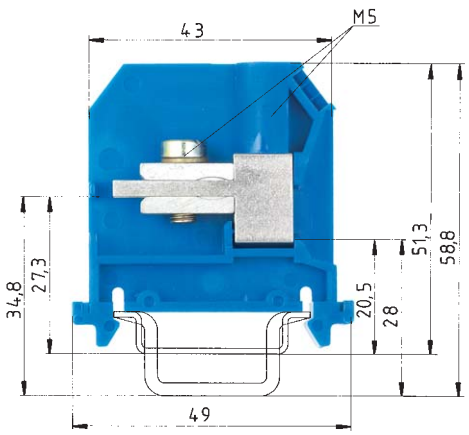

*)Install in grounded systems 690/400 V

9700 A/10 ETK S35

fine stranded	solid/stranded	V	A
1.5 – 16 mm²	1.5 – 16 mm²	400 V/6 kV/3*)	50

10 mm 15 mm

Type	Part no.	Std. pack	Type	Part no.	Std. pack	Type	Part no.	Std. pack
9700 A/6 ETK S 35	54.004.7753.0	100	9700 A/8 ETK S 35	54.010.7753.0	100	9700 A/10 ETK S 35	54.016.7753.0	100
35 x 27 x 7,5 EN 60715	98.300.0000.0	1	35 x 27 x 7,5 EN 60715	98.300.0000.0	1	35 x 27 x 7,5 EN 60715	98.300.0000.0	1
35 x 24 x 15 EN 60715	98.370.0000.0	1	35 x 24 x 15 EN 60715	98.370.0000.0	1	35 x 24 x 15 EN 60715	98.370.0000.0	1
9708/2 S 35	Z5.522.8553.0	100	9708/2 S 35	Z5.522.8553.0	100	9708/2 S 35	Z5.522.8553.0	100
9701/6 ETKL	07.310.4553.0	10						
			9701 B/8 ETK	07.310.5253.0	50	9701 B/10 ETK	07.310.5353.0	50
9813 M	98.290.0000.0	1	9813 M	98.290.0000.0	1	9813 M	98.290.0000.0	1
9813 M SN	98.290.1000.0	1	9813 M SN	98.290.1000.0	1	9813 M SN	98.290.1000.0	1
	30.494.1110.6	100		30.494.1110.6	100		30.494.1110.6	100
	30.494.2510.6	100		30.494.2510.6	100		30.494.2510.6	100
9701 ASH S 35	01.112.1453.0	100	9701 ASH S 35	01.112.1453.0	100	9701 ASH S 35	01.112.1453.0	100

Ground blocks
with screw technology, type *9700 A.. S35*

selos CLASSIC LINE

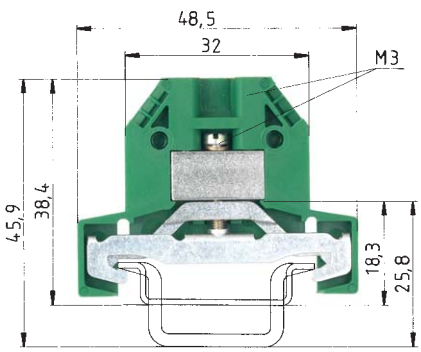

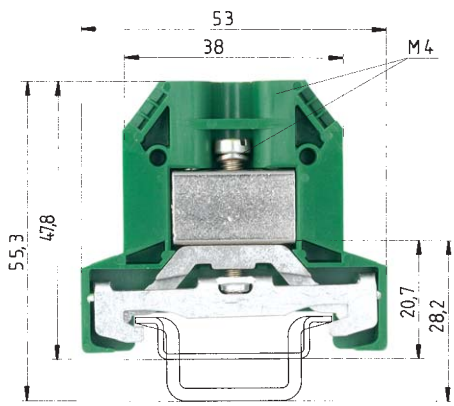

		9700 A/6 SL2 S35				9700 A/8 SL2 S35			
		fine stranded	solid	V	A	fine stranded	solid/stranded	V	A
DIN VDE 0611 Teil 3/11.98		0.5 – 4 mm²	0.5 – 6 mm²	800 V/8 kV/3*)	**)	0.5 – 10 mm²	0.5 – 10 mm²	800 V/8 kV/3*)	**)
UL-ratings	field/factory wiring	No. 18-10 AWG		600 V*)		No. 18-8 AWG		600 V*)	
CSA ratings		No. 22-10 AWG		600 V *)		No. 18-8 AWG		600 V*)	
Width	Wire strip length	6 mm			9 mm	8 mm			11 mm
Approvals									

		Type	Part no.	Std. pack	Type	Part no.	Std. pack
Feed-through terminal	Color: gray						
Feed-through block, (Ex)i	Color: blue						
Neutral disconnect block	Color: blue						
Ground block	Color: green-yellow	9700 A/6 SL 2 S 35	56.004.9053.0	100	9700 A/8 SL 2 S 35	56.010.9053.0	100
PEN terminal	Color: green/yellow - blue						
Accessories							
1. Mounting rail TS 35, DIN rail, 7.5 mm high	L = 2 m	35 x 27 x 7,5 EN 60715	98.300.0000.0	1	35 x 27 x 7,5 EN 60715	98.300.0000.0	1
Mounting rail TS 35, DIN rail 15 mm high	L = 2 m	35 x 24 x 15 EN 60715	98.360.0000.0	1	35 x 24 x 15 EN 60715	98.360.0000.0	1
2. End clamp TS 35, with screw	8 mm wide	9708/2 S35	Z5.522.8553.0	100	9708/2 S 35	Z5.522.8553.0	100
3. End plate	Color: gray	9701/6 SL	07.312.0053.0	10	9701/8 SL	07.312.0153.0	10
	Color: blue						
	Color: green						
4. Partition plate	Color: gray						
	Color: blue						
5. Jumper bar with screws,	2pole						
E-Cu, uninsulated	3pole						
	4pole						
	5pole						
	6pole						
Cut-to-order strip	0.6 m long						
6. Switchable connecting link							
7. Stud bolt for test plug							
8. Test plug							
9. Cover with warn. symbol over 1 block	Color: yellow						
10. Busbar							
E-Cu, 10 x 3 mm, tin-plated, I_N = 140 A	L = 1 m						
E-Cu, 10 x 3 mm, unplated, I_N = 140 A	L = 1 m						
11. Connector clamps for busbar							
25 mm²	11.1 mm wide						
35 mm² 14.3 mm wide							
12. Busbar support	6 mm wide						
13. Rapid mounting tool							
For marking accessories see pages 178-179 and 200/202		*CL I, ZN1, AExe II			*CL I, ZN1, AExe II		

selos

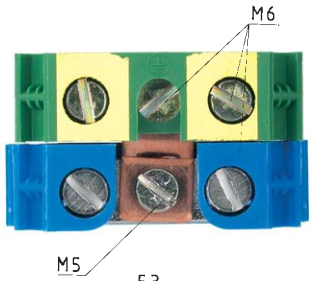

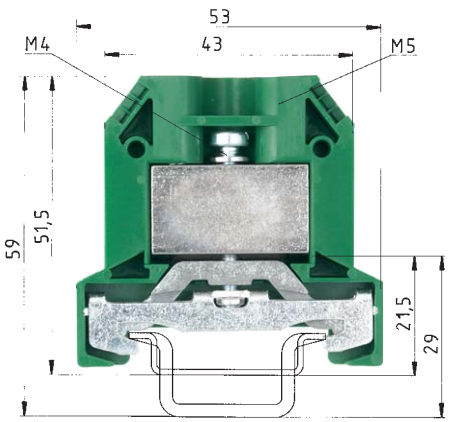

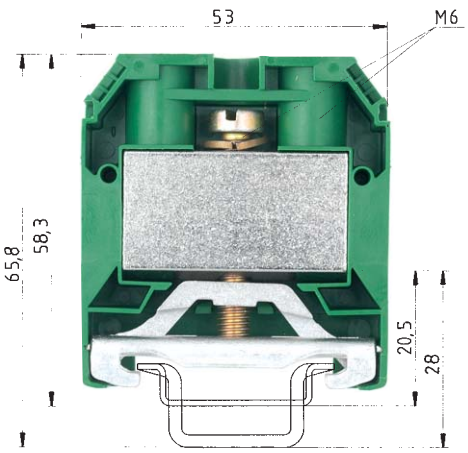

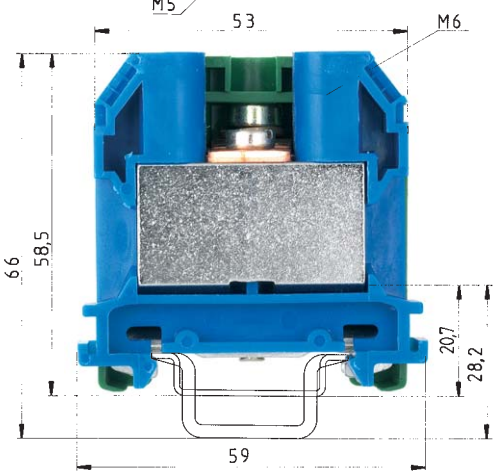

**)For the ratings to adjacent feed-through blocks of the same series and size

9700 A/10 SL2 S35

fine stranded	solid/stranded	V	A
1.5 – 16 mm²	1.5 – 16 mm²	800 V/8 kV/3*)	**)
No. 18-6 AWG			600 V*)
No. 16-6 AWG			600 V*)
10 mm			16 mm

9700 A/16 SL2 S35

fine stranded	solid/stranded	V	A
2.5 – 35 mm²	2.5 – 50 mm²	800 V/8 kV/3*)	**)
No. 12-2 AWG			
No. 12-2 AWG		600 V*)	
16 mm			18 mm

9700 A/16 PEN 2 S35

fine stranded	solid/stranded	V	A
2.5 – 35 mm²	2.5 – 50 mm²	500 V/6 kV/3**)	
32 mm			18 mm

Type	Part no.	Std. pack
9700 A/10 SL 2 S 35	56.016.9053.0	50
35 x 27 x 7,5 EN 60715	98.300.0000.0	1
35 x 24 x 15 EN 60715	98.360.0000.0	1
9708/2 S 35	Z5.522.8553.0	100
9701/10 SL	07.312.0253.0	10

*CL I, ZN1, AExe II

Type	Part no.	Std. pack
9700 A/16 SL 2 S 35	56.035.9053.0	50
35 x 27 x 7,5 EN 60715	98.300.0000.0	1
35 x 24 x 15 EN 60715	98.360.0000.0	1
9708/2 S 35	Z5.522.8553.0	100
9701/16 SL	07.312.0353.0	10

*CL I, ZN1, AExe II

Type	Part no.	Std. pack
9700 A/16 PEN 2, S 35	56.035.9453.0	20
35 x 27 x 7,5 EN 60715	98.300.0000.0	1
35 x 24 x 15 EN 60715	98.370.0000.0	1
9708/2 S 35	Z5.522.8553.0	100
9701/12 BLAU	07.310.3353.6	10
9702/12 BLAU	07.310.3653.6	10

Accessories for DIN rail mount terminal blocks with screw technology, type *9700 A.. S35*

selos CLASSIC LINE

Jumper bar with screws

Type	Part no.	Std. pack
2,5 mm²		
9700 A/5 S 35		
2pole 9703/5-2	Z7.215.0227.0	50
3pole 9703/5-3	Z7.215.0327.0	50
4pole 9703/5-4	Z7.215.0427.0	50
5pole 9703/5-5	Z7.215.0527.0	50
6pole 9703/5-6	Z7.215.0627.0	50
90pole 9703/5 M-90	Z7.215.0027.0	10
4 mm²		
9700 A/6 S 35		
2pole 9703/6-2	Z7.211.0227.0	50
3pole 9703/6-3	Z7.211.0327.0	50
4pole 9703/6-4	Z7.211.0427.0	50
5pole 9703/6-5	Z7.211.0527.0	50
6pole 9703/6-6	Z7.211.0627.0	50
70pole 9703/6 M-70	Z7.211.0027.0	10
10 mm²		
9700 A/8 S 35		
2pole 9703/8-2	Z7.212.0227.0	50
3pole 9703/8-3	Z7.212.0327.0	50
4pole 9703/8-4	Z7.212.0427.0	50
5pole 9703/8-5	Z7.212.0527.0	50
6pole 9703/8-6	Z7.212.0627.0	50
50pole 9703/8 M-50	Z7.212.0027.0	10

Type	Part no.	Std. pack
16 mm²		
9700 A/10 S 35		
2pole 9703/10-2	Z7.214.0227.0	50
3pole 9703/10-3	Z7.214.0327.0	50
4pole 9703/10-4	Z7.214.0427.0	50
5pole 9703/10-5	Z7.214.0527.0	50
6pole 9703/10-6	Z7.214.0627.0	50
40pole 9703/10 M-40	Z7.214.0027.0	10
25 mm²		
9700 A/12 S 35		
2pole 9703/12-2	Z7.213.0227.0	50
3pole 9703/12-3	Z7.213.0327.0	50
4pole 9703/12-4	Z7.213.0427.0	50
5pole 9703/12-5	Z7.213.0527.0	50
6pole 9703/12-6	Z7.213.0627.0	50
30pole 9703/12 M-30	Z7.213.0027.0	10
35 mm²		
9700 A/16 S 35		
2pole 9703/16-2	Z7.216.0227.0	50
3pole 9703/16-3	Z7.216.0327.0	50
4pole 9703/16-4	Z7.216.0427.0	50
5pole 9703/16-5	Z7.216.0527.0	50
6pole 9703/16-6	Z7.216.0627.0	50
20pole 9703/16 M-20	Z7.216.0027.0	10

Warning cover

Type	Part no.	Std. pack
for terminal block type 9700 A/.. S 35		
2,5 mm²	04.325.1656.0	10
4 mm²	04.325.1056.0	10
10 mm²	04.325.1156.0	10
16 mm²	04.325.1256.0	10
25 mm²	04.325.1356.0	10
35 mm²	04.325.1456.0	10

selos

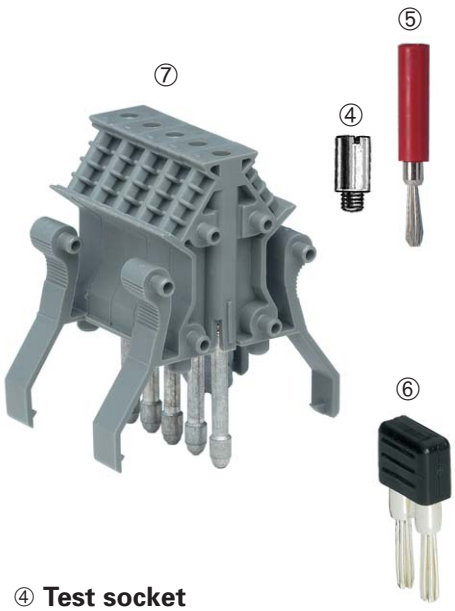

① **Switchable connecting link**
② **Screws with link**
③ **Screw spacer**

④ **Test socket**
⑤ **Test plug with insulated handle**
⑦ **Shorting plug**
⑥ **Modular test plug**

Rapid mounting tool

Type	Part no.	Std. pack
for terminal block type 9700 A/.. S 35		
Switchable connecting link		
2,5 mm²	Z7.269.3523.0	50
4 mm²	Z7.269.2923.0	50
10 mm²	Z7.269.3023.0	50
16 mm²	Z7.269.3123.0	50
25 mm²	Z7.269.3223.0	50
35 mm²	Z7.269.3423.0	50
Switchable connecting link with screws		
2,5 mm²	Z7.269.2823.0	50
4 mm²	Z7.269.0623.0	50
10 mm²	Z7.269.0523.0	50
16 mm²	Z7.269.0723.0	50
Threaded stud bolt (screw spacer)		
2,5 mm²	05.508.8621.0	50
4 mm²	05.508.8621.0	50
10 mm²	05.508.8721.0	50
16 mm²	05.508.9721.0	50

Type	Part no.	Std. pack
for terminal block type 9700 A/.. S 35		
Test socket		
2,5 mm²	05.508.8921.0	10
4 mm²	05.508.8821.0	10
10 mm²	05.508.3221.0	10
16 mm²	05.508.3121.0	10
25 mm²	05.508.6521.0	10
35 mm²	05.508.6521.0	10
Test plug with insulated handle		
Ø 2,3 mm 2,5/4 mm² red		
Ø 4 mm 10/16/25/35 mm² black		
2,5 mm²	Z5.553.2921.0	10
4 mm²	Z5.553.2921.0	10
10 mm²	Z5.553.3021.0	10
16 mm²	Z5.553.3021.0	10
25 mm²	Z5.553.3021.0	10
35 mm²	Z5.553.3021.0	10
Shorting plug		
	Z5.553.9400.0	100
For all 6 mm wide control cabinet terminal blocks, to		
be used together with stud bolts		
(part no. 05.508.8821)		
Modular test plug		
snap-on with locking lever for 9700 A 6/S 35		
	Z1.299.7153.0	10
Test plug		
snap-on	Z1.299.8153.0	10

Type	Part no.	Std. pack
for terminal block type 9700 A/.. S 35		
Rapid mounting tool		
2,5 mm²	05.593.5853.0	10
4 mm²	05.593.4153.0	
10 mm²	05.593.5953.0	10

Accessories for DIN rail terminal blocks with screw connection

selos CLASSIC LINE

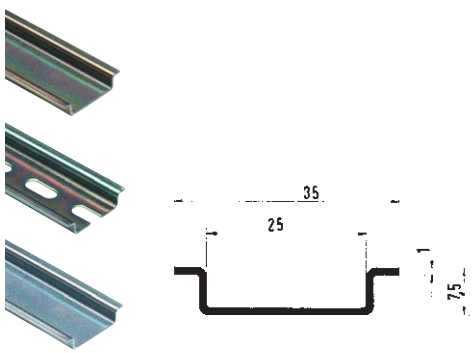

Mounting rail 35 x 7.5
accord. to DIN EN 60715

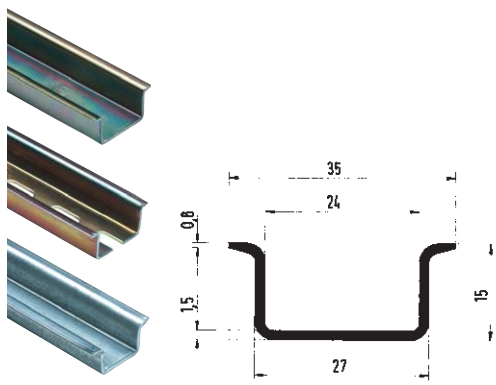

Mounting rail 35 x 15
accord. to DIN EN 60715

	Type	Part no.	Std. pack	Type	Part no.	Std. pack
Mounting rail						
1. Steel, galv. zinc-plated and dichromated, unslotted L = 2 m	35 x 27 x 7,5 EN 60715	98.300.0000.0	1	35 x 27 x 15 EN 60715	98.370.0000.0	1
Steel, galv. zinc-plated and dichromated, slotted L = 2 m	35 x 27 x 7,5 EN 60715 slotted	98.300.1000.0	1	35 x 27 x 15 EN 60715	98.370.1000.0	1
2. Steel, unplated unslotted L = 2 m	35 x 27 x 7,5 EN 60715 unplated	98.300.0010.0				
Steel, unplated slotted L = 2 m						
3. Steel, hot-galvanized unslotted L = 2 m						
Steel, hot-galvanized slotted L = 2 m						
4. E copper unslotted L = 2 m						
E copper slotted L = 2 m						
5. Aluminum unslotted L = 2m	35 x 27 x 7.5 EN 60715	98.750.0000.0				
slotted L = 1 m	35 x 27 x 7.5 EN 60715	98.800.1000.0				
6. Stainless steel unslotted L = 2m	35 x 27 x 7.5 EN 60715	98.330.0000.0				
End clamp						
7. End clamp with screw for 35 mm rail 8 mm wide						
8. End clamp with screw for 35 mm rail						
with marking plate 8/17.5 mm wide						
9. End clamp, screwless, for 35 mm rail 8 mm wide						
10. End clamp, screwless, for 35 mm rail						
with marking plate 8/17,5 mm wide						
for terminal rails						
11. Bus bar holder 8 mm wide						
Busbar support, with screw 8 mm						
12. Clamping screw for mounting rail						
13. Optional label carrier						
14. Paper Markers in perforated sheet form						
(1 sheet = 100 Marking tags)						

selos

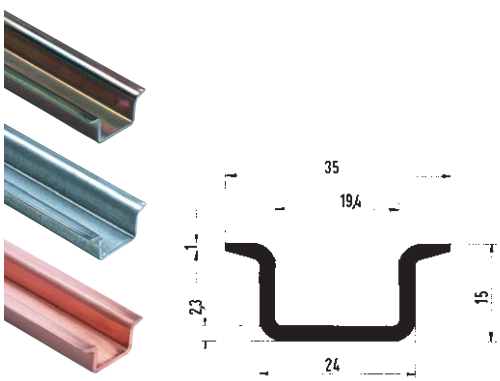

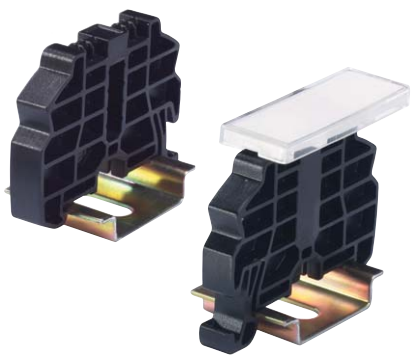

Mounting rail 35 x 15
accord. to DIN EN 60715

Type	Part no.	Std. pack
35 x 27 x 15 EN 60715	98.360.0000.0	1
35 x 27 x 15 EN 60715 ZN	98.360.0004.0	1
35 x 27 x 15 EN 60715 CU	98.380.0000.0	10

End clamp for TS 35
Screw Mounting

Type	Part no.	Std. pack
9708/2 S 35	Z5.522.8553.0	100
9708/2 BS/35	69.920.0553.0	100
	04.019.0289.0	10

End clamp for TS 35
Screwless Mounting

Type	Part no.	Std. pack
WEF 1/35	Z5.523.9353.0	100
WEF 1 BS/35	69.920.1053.0	100
WKIF SH/E/35	Z1.108.8453.0	10
	69.920.1153.0	
	05.091.0200.0	
BSIR	Z4.243.8453.0	
	04.019.0289.0	10

Marking accessories for DIN rail terminal blocks

selos CLASSIC LINE

Material:
Polyamide 66/6
Color: black figures on white background

DIN rail terminal blocks with screw connection of series 97.., can take in marking tags on both sides on top of the block in a 3-chamber slot. It can be either 3 single number tags from the tear-off marking strip, or single tags, or marking strips.

1. **Marking strips** marked and unmarked, made from Polyamide 66/6, suitable for10 blocks in a row.

   Marking 1-10, 11-20 etc. up to 991-999.
   Type 9705 A/5/10 (5 mm spacing) for 5mm wide terminal blocks
   Type 9705 A/6/10 (6 mm spacing) for 6 mm wide terminal blocks
   Typ 9705 A/8/10 (8 mm spacing) for 8 mm wide terminal blocks
   Type 9705 A/5/10/5 B (10 mm spacing) for 10 mm wide terminal blocks
   Type 9705 A/6/10/5 B (12 mm spacing) for 12 mm wide terminal blocks
   Typ 9705 A/8/10/5 B (16 mm spacing) for 16 mm wide terminal blocks
2. **Tear-off marking strip** with 10 marking tags, made from Polyamide 66/6, white, marked and unmarked.

   This marking system considerably reduces the time required for marking terminal block rows. For numerical marking of terminal block rows only 11 stock positions are required. As the time used for picking and attaching the tags is reduced, and as stockkeeping is low and the prices extremely favorable, enormous cost savings are the result from using these tear-off marking strips.

   Type 9704 A...
   (see page 180)
3. **Single marking tag** made from white Polyamide 66/6, marked and unmarked. Type 9705 A...

5 mm pitch

All terminal widths/pitch

Type	Part no.	Std. pack	Type	Part no.	Std. pack
Single marking tag, unmarked			**Marking strips, unmarked**		
9705 A	04.242.0850.0	500	9705 A/5/10	04.242.5053.0	25
Single marking tag, marked			**Marking strips, marked**		
9705 AB*	04.842.0850.0	500			
			9705 A/5/9 B 1 - 9	04.842.4953.0	25
			9705 A/5/10 B*	04.842.5053.0	25
			9705 A/5/10 B 1 - 10	04.845.0153.0	25
			11 - 20	04.845.0253.0	25
Single marking tag, unmarked			21 - 30	04.845.0353.0	25
with enlarged marking area			31 - 40	04.845.0453.0	25
9705 AL	04.242.1553.0	500	41 - 50	04.845.0553.0	25
			51 - 60	04.845.0653.0	25
Single marking tag, marked			61 - 70	04.845.0753.0	25
for enlarged marking area			71 - 80	04.845.0853.0	25
9705 ALB	04.842.1553.0	500	81 - 90	04.845.0953.0	25
			91 - 100	04.845.1053.0	25
			⏚ (10 x)	04.855.0053.0	25
			⏚ (10 x)	04.855.0153.0	25
			+ (10 x)	04.855.0253.0	25
			– (10 x)	04.855.0353.0	25
			L1 (10 x)	04.855.0453.0	25
			L2 (10 x)	04.855.0553.0	25
			L3 (10 x)	04.855.0653.0	25
			PE (10 x)	04.855.0753.0	25
			SL (10 x)	04.855.3153.0	25
			N (10 x)	04.855.3253.0	25
			F1 (10 x)	04.855.0953.0	25
			F2 (10 x)	04.855.1053.0	25
			L1, L2, L3, N, PE (2 x)	04.855.0853.0	25
			with enlarged marking area		
			9705 AL/5/10	04.242.5153.0	25
*Custom marking upon request			* Custom marking upon request		

selos

6 mm pitch

Type		Part no.	Std. pack
Marking strips, unmarked			
9705 A/6/10		04.242.6053.0	25
Marking strips, marked			
9705 A/6/9 B	1 - 9	04.842.5953.0	25
9705 A/6/10 B*		04.842.6053.0	25
9705 A/6/10 B	1 - 10	04.846.0153.0	25
	11 - 20	04.846.0253.0	25
	21 - 30	04.846.0353.0	25
	31 - 40	04.846.0453.0	25
	41 - 50	04.846.0553.0	25
	51 - 60	04.846.0653.0	25
	61 - 70	04.846.0753.0	25
	71 - 80	04.846.0853.0	25
	81 - 90	04.846.0953.0	25
	91 - 100	04.846.1053.0	25
⏚	(10 x)	04.856.0053.0	25
⏚	(10 x)	04.856.0153.0	25
+	(10 x)	04.856.0253.0	25
–	(10 x)	04.856.0353.0	25
L1	(10 x)	04.856.0453.0	25
L2	(10 x)	04.856.0553.0	25
L3	(10 x)	04.856.0653.0	25
PE	(10 x)	04.856.0753.0	25
SL	(10 x)	04.856.3153.0	25
N	(10 x)	04.856.3253.0	25
F1	(10 x)	04.856.0953.0	25
F2	(10 x)	04.856.1053.0	25
L1, L2, L3, N, PE	(2 x)	04.856.0853.0	25
with enlarged marking area			
9705 AL/6/10		04.242.6353.0	25
* Custom marking upon request			

8 mm pitch

Type		Part no.	Std. pack
Marking strips, unmarked			
9705 A/8/10		04.242.8053.0	25
Marking strips, marked			
9705 A/8/9 B	1 - 9	04.842.7953.0	25
9705 A/8/10 B*		04.842.8053.0	25
9705 A/8/10 B	1 - 10	04.848.0153.0	25
	11 - 20	04.848.0253.0	25
	21 - 30	04.848.0353.0	25
	31 - 40	04.848.0453.0	25
	41 - 50	04.848.0553.0	25
	51 - 60	04.848.0653.0	25
	61 - 70	04.848.0753.0	25
	71 - 80	04.848.0853.0	25
	81 - 90	04.848.0953.0	25
	91 - 100	04.848.1053.0	25
⏚	(10 x)	04.858.0053.0	25
⏚	(10 x)	04.858.0153.0	25
+	(10 x)	04.858.0253.0	25
–	(10 x)	04.858.0353.0	25
L1	(10 x)	04.858.0453.0	25
L2	(10 x)	04.858.0553.0	25
L3	(10 x)	04.858.0653.0	25
PE	(10 x)	04.858.0753.0	25
SL	(10 x)	04.858.3153.0	25
N	(10 x)	04.858.3253.0	25
F1	(10 x)	04.858.0953.0	25
F2	(10 x)	04.858.1053.0	25
L1, L2, L3, N, PE	(2 x)	04.858.0853.0	25
*Custom marking upon request			

10 mm pitch

12 mm pitch

16 mm pitch

Type		Part no.	Std. pack
16 mm²/10 mm pitch			
marked for 5 blocks (every 2nd tag) *			
9705 A/5/10/5 B		04.842.5553.0	25
25 mm²/12 mm pitch			
marked for 5 blocks (every 2nd tag) *			
9705 A/6/10/5 B		04.842.6553.0	25
35 mm²/16 mm pitch			
marked for 5 blocks (every 2nd tag) *			
9705 A/8/10/5 B		04.842.8553.0	25
* indicate required marking with part no.			

Marking accessories for DIN rail terminal blocks

selos

Tear-off marking strip with 10 marking tags

Material: Polyamide 66/6 white, marking in black Marking per strip		Type	Part no.	Stand. pack
unmarked		9704 A	04.241.1150.0	25
marked with the same number	1 1 1 1 1 1 1 1 1 1	9704 A/1 B	04.841.1150.0	25
	2 2 2 2 2 2 2 2 2 2	9704 A/2 B	04.841.1250.0	25
	3 3 3 3 3 3 3 3 3 3	9704 A/3 B	04.841.1350.0	25
	4 4 4 4 4 4 4 4 4 4	9704 A/4 B	04.841.1450.0	25
	5 5 5 5 5 5 5 5 5 5	9704 A/5 B	04.841.1550.0	25
	6 6 6 6 6 6 6 6 6 6	9704 A/6 B	04.841.1650.0	25
	7 7 7 7 7 7 7 7 7 7	9704 A/7 B	04.841.1750.0	25
	8 8 8 8 8 8 8 8 8 8	9704 A/8 B	04.841.1850.0	25
	9 9 9 9 9 9 9 9 9 9	9704 A/9 B	04.841.1950.0	25
	0 0 0 0 0 0 0 0 0 0	9704 A/0 B	04.841.2050.0	25
marked with consecutive numbers	1 2 3 4 5 6 7 8 9 0	9704 A/1-0 B	04.841.2150.0	25
marked with the same symbols	+ + + + + + + + + +	9704 A/+ B	04.841.7450.0	25
	– – – – – – – – – –	9704 A/– B	04.841.7550.0	25
	/ / / / / / / / / /	9704 A// B	04.841.7650.0	25
	. . . .	9704 A/. B	04.841.7750.0	25
1 set of the same numbers = 10 x 25 strips = 2500 numbers	1 1 1 ... 0 0 0	A to Z (capital letters)	04.841.9050.0	1
1 set of capital letters = 26 x 25 strips = 6500 letters	A A A ... Z Z Z	a to z (small letters)	04.841.9150.0	1
1 set of small letters = 26 x 25 strips = 6500 letters	a a a ... z z z		04.841.9250.0	1

TOP system

selos

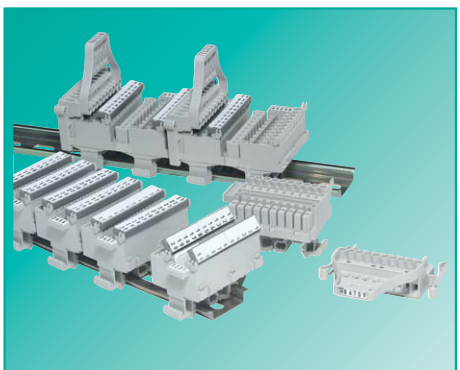

The TOP system offers

- ❒ Terminal block module based on narrow pitch of 5mm
- ❒ Top-System allows wire entry and screwdriver access in the same plane

Application advantages

- → Save space in the panel – up to 40%
- → Ease of inserting and terminating the conductor

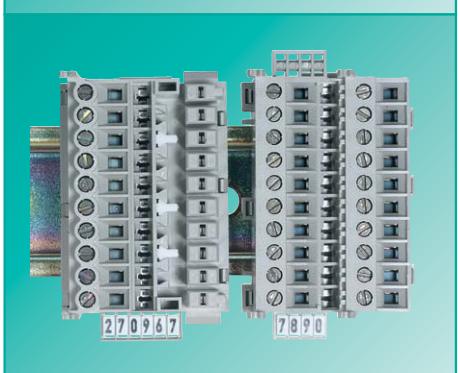

Universal mounting foot for
- ❒ TS 35 mm DIN rail to EN 60715
- ❒ TS 32 mm DIN rail to EN 60715

Feed-through terminals located in the center

→ Easy mounting, secure attachment on all types of DIN rail

Materials:
Insulating housing: Polyamide 66/6
Clamping body / clamping screws: steel, zinc-plated and dichromated
Current Carrying Bar: Tin-plated copper alloy

→ Due to its excellent electrical, chemical and mechanical properties

→ Low contact resistance

→ Each terminal can be marked individually

TOP plug system

Accepts 10 pole plug-able connector

Coding capability: 28 coding configurations

Plug-able connector with locking levers

Strain relief

Ease of use

Clean and neat wiring

Plug-able connector cannot be mismated

Plug-able connector provides a safe connection which locks in place

Strain relief with cable ties via holes on the marking late

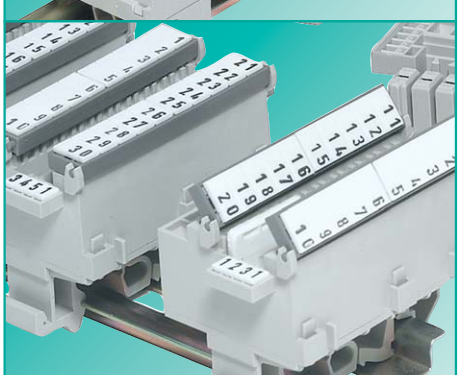

Top-system standard

10 pole feed through terminal block module

Orientation perpendicular to the mounting rail

Pitch/width is only 39 mm for 10 terminals

Screw technology

Ease of use

Clean and neat wiring

Secure connection

Marking tag system

- ❒ Snap in marking tag carrier
- ❒ Marking facility for module
- ❒ Marking system uses Wieland standard tags
- ❒ Module is molded with marking 1-10

→ Mark every termination point

→ Mark modules individually

→ Reduces Inventory

→ Quick and easy installation (no screws)

Potential commoning

- ❒ Insulated plug-in jumper bars (2-10 pole)

→ Increased safety due to tough safe design

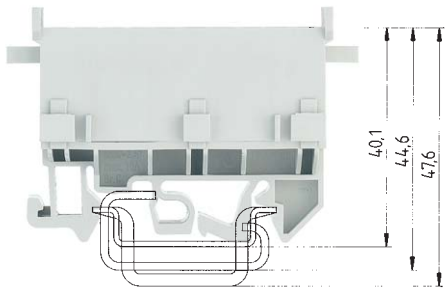

WKB 2,5/U

		fine stranded	solid	V	A
EN 60 947-7-1/DIN VDE 0611 T1		0.5 - 2.5 mm²	0.5 - 4 mm²	400 V/6 kV/3	20
UL-ratings		No. 22-12	AWG	300 V	10
CSA ratings		No. max. 12 AWG		300 V	10
Width	Wire strip length	39 mm			10 mm
Approvals					

	Type	Part no.	Std. pack
Terminal block assembly (screw)	WKB 2,5/U	57.603.0055.0	10
Terminal block assembly (screw/plug)			
TOP plug with coding and marking facilities			
Accessories			
1. Mounting rail TS 35, DIN rail, 7.5 mm high L = 2 m	35 x 27 x 7,5 EN 60715	98.300.0000.0	1
Mounting rail TS 35, DIN rail 1.5mm high L = 2 m	35 x 24 x 15 EN 60715	98.360.0000.0	1
Mounting rail TS 32 G rail L = 2 m	9006 EN 60715 G-32	98.190.0000.0	1
2. End clamp with U-foot 10 mm wide	WE 1/U	Z5.523.5753.0	100
End clamp TS 35, with screw 8 mm wide	9708/2 S 35	Z5.522.8553.0	100
End clamp TS 32, with screw 7.5 mm wide	9708	Z5.522.7053.0	100
3. Push-in jumper bar			
E-Cu insulated 2pole		Z7.258.0225.0	10
3pole		Z7.258.0325.0	10
to 10pole		Z7.258.1025.0	10
4. Mounting adapter for mounting right		05.523.1610.0	10
parallel to the rail left		05.523.1710.0	10
Coding pins, 10 each per strip			
Marking tag carrier, snap-on		04.242.3253.0	
For marking systems see pages 178-183 and 250-251			

*) When two cross connectors are mounted adjacent to each other, the rated voltage is reduced to 250 V/4 kV/3

selos

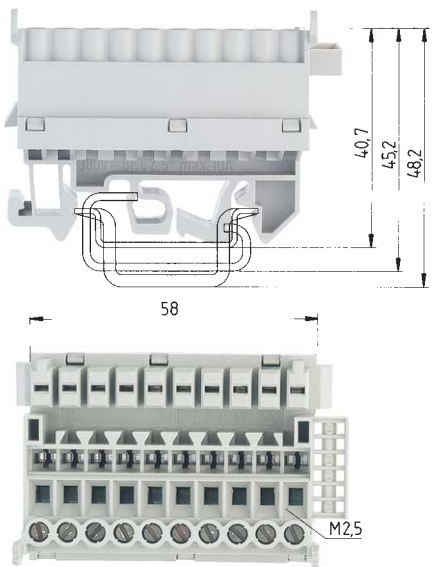

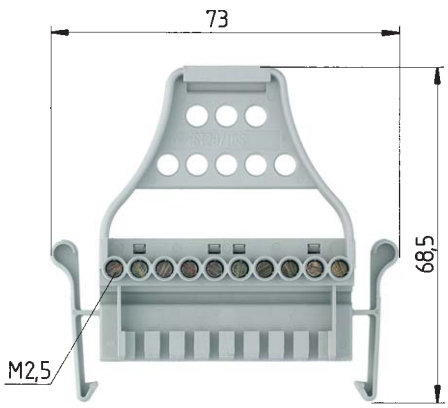

WKB 2,5/B/U

fine stranded	solid	V	A
0.5 - 2.5 mm²	0.5 - 4 mm²	400 V/6 kV/3	10
No. 22-12	AWG	300 V	5
No. 22-12	AWG	300 V	5
38 mm			10 mm

ST 29/10 S

fine stranded	solid	V	A
0.5 - 2.5 mm²	0.5 - 4 mm²	400 V/6 kV/3	10
No. 22-14	AWG	300 V	5
No. 22-14	AWG	300 V	5
			6 mm

Type	Part no.	Std. pack
WKB 2,5/B/U	57.603.3555.0	10
35 x 27 x 7,5 EN 60715	98.300.0000.0	1
35 x 24 x 15 EN 60715	98.360.0000.0	1
9006 EN 60715 G-32	98.190.0000.0	1
WE 1/U	Z5.523.5753.0	100
9708/2 S 35	Z5.522.8553.0	100
9708	Z5.522.7053.0	100
	Z7.258.0225.0	10
	Z7.258.0325.0	10
	Z7.258.1025.0	10
	05.599.8053.0	100

Type	Part no.	Std. pack
ST 29/10 S	93.102.0055.0	50
	Z7.258.0225.0	10
	Z7.258.0325.0	10
	Z7.258.1025.0	10
	05.599.8053.0	100

Coding

S	B	B	B	B	B	B	S	1. combination
S	B	B	B	B	B	S	B	2. combination
S	B	B	B	B	S	B	B	3. combination
S	B	B	B	S	B	B	B	4. combination
S	B	B	S	B	B	B	B	5. combination
S	B	S	B	B	B	B	B	6. combination
S	S	B	B	B	B	B	B	7. combination
B	S	B	B	B	B	B	S	8. combination
B	S	B	B	B	B	S	B	9. combination
B	S	B	B	B	S	B	B	10. combination
B	S	B	B	S	B	B	B	11. combination
B	S	B	S	B	B	B	B	12. combination
B	S	S	B	B	B	B	B	13. combination
B	B	S	B	B	B	B	S	14. combination
B	B	S	B	B	B	S	B	15. combination
B	B	S	B	B	S	B	B	16. combination
B	B	S	B	S	B	B	B	17. combination
B	B	S	S	B	B	B	B	18. combination
B	B	B	S	B	B	B	S	19. combination
B	B	B	S	B	B	S	B	20. combination

etc.

Distribution module, 32 pole
plug-able system with shield connection

selos

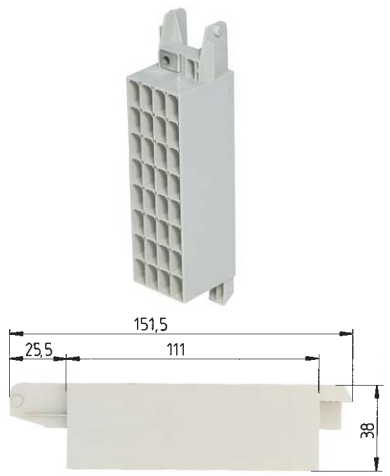

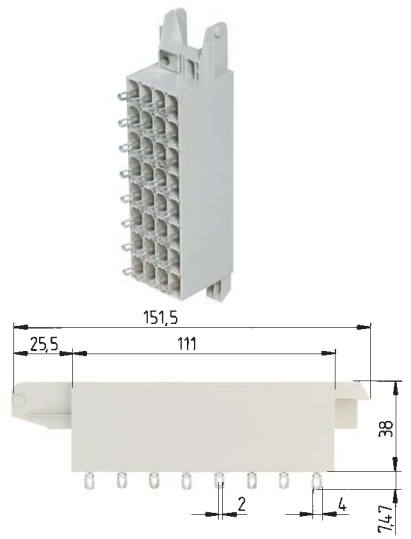

Material: Insulating part: Polyamide 66/6 gray, blue
Tab connector: tin-plated copper alloy
Spring contact: tin-plated bronze
Tab connector: 2.8 x 0.8 mm

*) Push-on connector 6.3 mm 20 A
Push-on connector 2.8 mm 10 A
TERMI-POINT 10 A

		RV2S/...				RV2S/...L			
		Front	Rear	V	A	Front	Rear	V	A
Voltage accord. to DIN VDE 0110				400 V/6 kV/3	*)			400 V/6 kV/3	*)
Distribution module	gray (per pole)	3 x 2,8 x 0,8	3 x 2,8 x 0,8			3 x 2,8 x 0,8	1 Lötanschluss		
	blue	2 x 2,8 x 0,8	2 x 2,8 x 0,8			2 x 2,8 x 0,8	1 Lötanschluss		

	Type	Part no.	Std. pack	Type	Part no.	Std. pack
Distribution module pluggable system Color: gray	RV2S/6	26.500.2053.0	10	RV2S/3L	26.500.2153.0	10
Color: blue	RV2S/4 blau	26.500.2353.0	10	RV2S/2L blau	26.500.2453.0	10
Plug-able connector Color: gray						
Color: blue						
Accessories						
1. Spring contact for 0.5 - 1 mm²						
Banded contacts						
Single contact						
4. Spring contact for 0.1 – 0.5 mm²						
Banded contacts						
Single contact						
7. Crimp Tool						
8. Contact removal tool						
9. Replacement latch						
For marking systems see pages 178-183 and 250-251						

selos

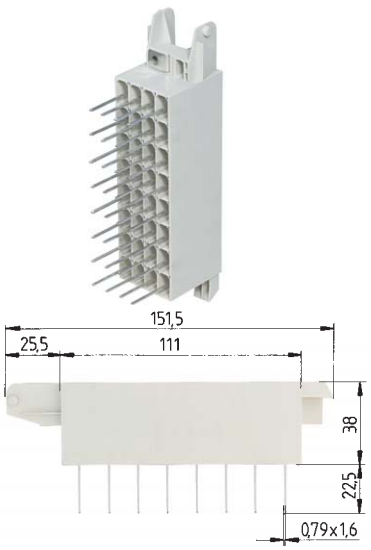

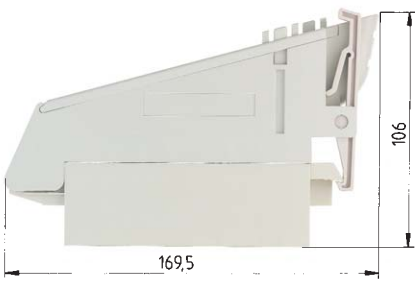

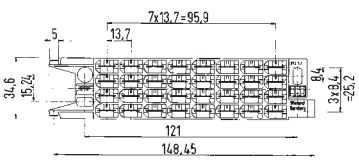

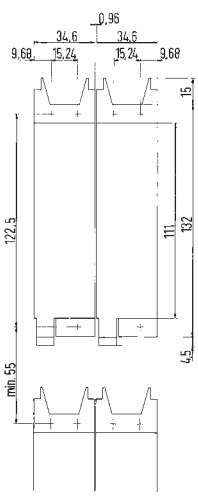

RV2S/...TP1

Front	Rear	V 400 V/6 kV/3	A *)	V 400 V/6 kV/3	A *)
3 x 2,8 x 0,8	2 x 2,8 x 0,8 1 x Termi-Point				
2 x 2,8 x 0,8	1 x Termi-Point				

Type	Part no.	Std. pack	Type	Part no.	Std. pack
RV2S/3TP1	26.500.2253.0	10			
RV2S/2TP1blau	26.500.2553.0	10			
				93.004.0056.0	10
				93.004.0056.6	10
				02.124.4000.0	4000
				02.124.4029.0	
				02.124.4100.0	4000
				02.124.4129.0	
				95.101.0612.0	1
				05.502.0200.0	1
				05.502.0500.0	1

The narrow design of the terminal block is only 35 mm wide, with 32 connections in four rows and, means that you can increase the packing density when using touch-on clamp type or solder connection methods. This sytem can be expanded using a 32 pole plug which enables simultaneous connection of 32 contacts.
Advantages:
- easy connection of all poles via a hinged lever on the group plug
- can be fixed securely by means of an easy-to-operate locking lever on the lower section
- cable strain relief
- a cover on the plug connector enables measurements to be taken when the group plug in connected
- leading earth contact which can be directly connected to the frame upon assembly
- marking facility – marker tag type 9705 AB and 9704 AB (see page 180)

Distribution Module 32pole

selos

Material: Insulating part: Polyamide 66/6 gray, blue
Tab connector: tin-plated brass
Tab connector: 2.8 x 0.8 mm

*) Push-on connector	6.3 mm	20 A
Push-on connector	2.8 mm	10 A
TERMI-POINT		10 A

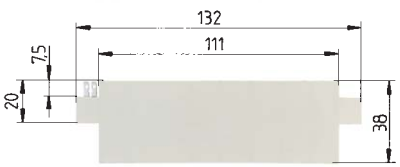

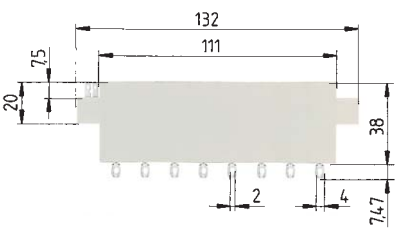

	RV2/A...				RV2A/...L			
	Front	Rear	V	A	Front	Rear	V	A
Voltage accord. to DIN VDE 0110			400 V/6 kV/3	*)			400 V/6 kV/3	*)
Stacking coordinate gray (per pole)	3 x 2.8 x 0.8	3 x 2.8 x 0.8			3 x 2.8 x 0.8	1		
blue	2 x 2.8 x 0.8	2 x 2.8 x 0.8			2 x 2.8 x 0.8	1		

		Type	Part no.	Std. pack	Type	Part no.	Std. pack
DIstribution module standard version	Color: gray	RV2A/6	26.500.4053.0	10	RV2A/3L	26.500.4153.0	10
	Color: blue	RV2A/4 blau	26.500.4353.0	10	RV2A/2L blau	26.500.4453.0	10

For marking systems see pages 178-183 and 250-251

selos

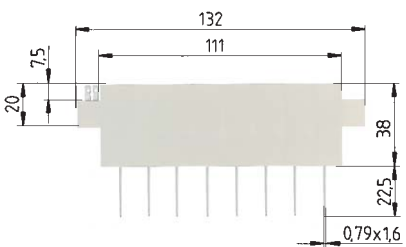

RV2A/...TP1

Front	Rear	V 400 V/6 kV/3	A *)
3 x 2.8 x 0.8	2 x 2,8 x 0,8 1 x Termi-Point		
2 x 2.8 x 0.8	1 x Termi-Point		

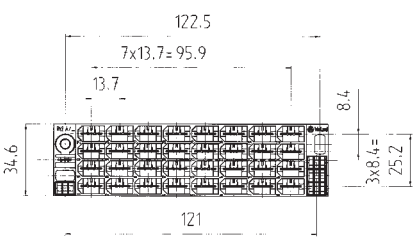

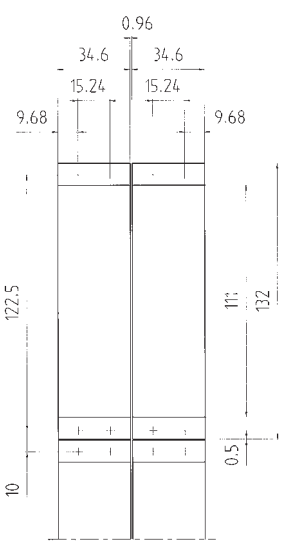

Type	Part no.	Std. pack
RV2A/3TP1	26.500.4253.0	10
RV2A/2TP blau	26.500.4553.0	10

Shielded cable terminals, type *SK*

selos

System advantages

- ❒ Easy and safe contacting without damage to the braided shield
- ❒ Stainless Steel pressure spring ensures excellent contact
- ❒ Corrosion resistant due to anticorodal contact material
- ❒ spring terminal available in three different sizes (5 – 34 mm diameter)
- ❒ Potential commoning via the mounting rail
- ❒ Insulated mounting of the rail via the plastic (duroplast) mounting feet

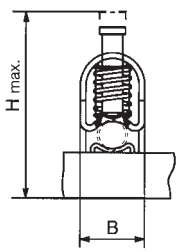

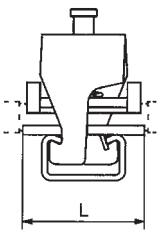

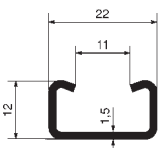

Material: Anticorodal

SK...

Type (shielded cable diameter)	Clamping Force	B	L	H_{max}
SK5-11	14-24 N	17 mm	32 mm	49 mm
SK9,5-13,5	20-35 N	22 mm	32 mm	54 mm
SK12,5-16,5	28-47 N	26 mm	32 mm	58,5 mm
SK15,5-20,5	70-95 N	32 mm	32 mm	66,5 mm
SK19-27	85-107 N	39 mm	32 mm	73 mm
SK26-34	105-130 N	48 mm	32 mm	84 mm

	Type	Part no.	Std. pack	Type	Part no.	Std. pack
Shielded cable terminals	SK 5-11	Z2.803.0228.0	10			
	SK 9,5-13,5	Z2.803.0328.0	10			
	SK 12,5-16,5	Z2.803.0428.0	10			
	SK 15,5-20,5	Z2.803.2228.0	10			
	SK 19-27	Z2.803.2328.0	10			
	SK 26-34	Z2.803.2428.0	10			
Accessories						
1. Mounting rail (galvanized steel) L = 2 m					98.400.0000.0	1
2. Mounting feet Color: light gray						
3. Ground terminal						

selos

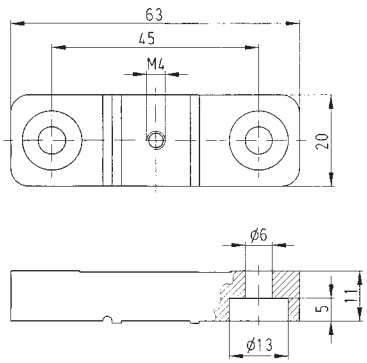

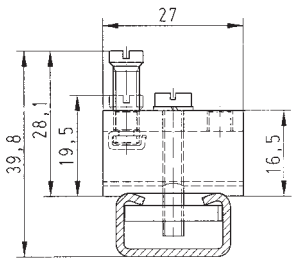

Ground terminal for mounting rail.
Clamping body: nickel plated copper alloy

Rated cross section: 16 mm²
rated wire guage
stranded: 10 – 16 mm² / 6 – 4 AWG
fine stranded: 1.5 – 16 mm² / 18 – 4 AWG

Wire strip length: 11 mm
Width: 8.4 mm

Base: Duroplast, light gray
Female part: brass
Thread: M4

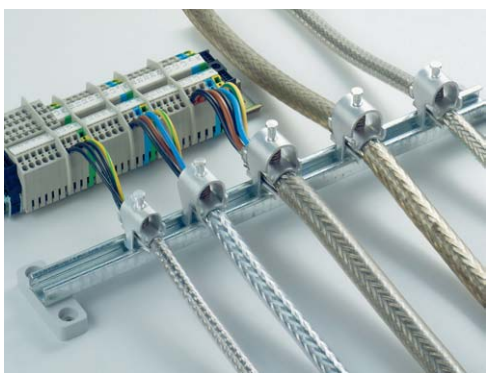

Type	Part no.	Std. pack	Type	Part no.	Std. pack
	Z1.980.0040.0	10			
			9700/10E/1	Z2.302.1321.0	10

Shielded cable terminals, type *SKN*

selos

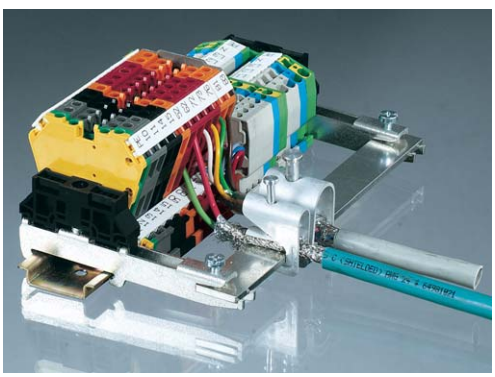

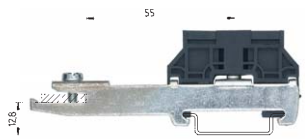

WE SH 1

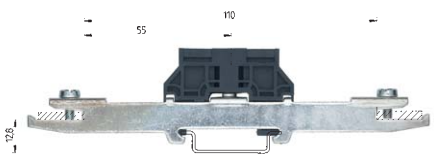

WE SH 2

Material: nickel-plated brass

SKN...

Type (shielded cable diameter)	Clamping force	B	L	H_{max}
SKN1,5-6,5	8-13 N	10 mm	25 mm	33,5 mm
SKN5-11	22-31 N	17 mm	25 mm	41 mm
SKN10-17	32-58 N	23 mm	25 mm	57 mm
SKN16-24	37-53 N	30 mm	25 mm	71 mm

	Type	Part no.	Std. pack	Type	Part no.	Std. pack
Shielded cable terminals	SKN1,5-6,5	Z2.803.1328.0	10			
	SKN5-11	Z2.803.1428.0	10			
	SKN10-17	Z2.803.1528.0	10			
	SKN16-24	Z2.803.1628.0	10			
Accessories						
1. Busbar support (one-sided), tin-plated steel				WE SH 1/35	Z5.515.3310.0	20
Busbar support (two-sided), tin-plated steel				WE SH 2/35	Z5.515.3410.0	20
Busbar support, plastic Color: black						
2. Ground terminal, tin-plated steel Color: green-yellow						
3. Busbar, Cu tin-plated 18x3 mm L = 1 m						

selos

WE SH3

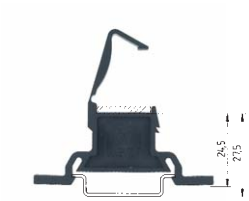

SKN SH/35

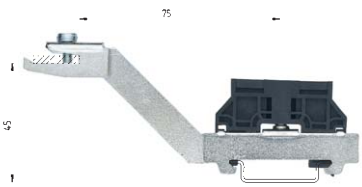

WE SH4

WAK 35/4

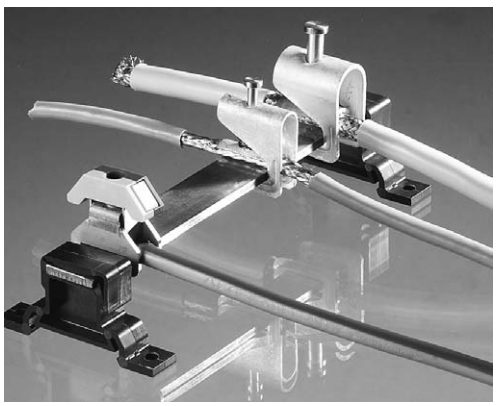

Type	Part no.	Std. pack	Type	Part no.	Std. pack
WESH4/35	Z5.519.0410.0	25			
WESH3/35	Z5.519.0310.0	25			
			SKNSH/35/F	Z1.980.0153.0	10
			WAK35/4GN	30.494.4210.0	
			18 x 3MSN	98.291.1000.0	10

Busbar components selos

Insulating housing: Polyamide 66/6 - tracking resistant
Clamping body: nickel-plated brass
Wire protection: phosphor bronze
Clamping screws: steel, zinc-plated and dichromated

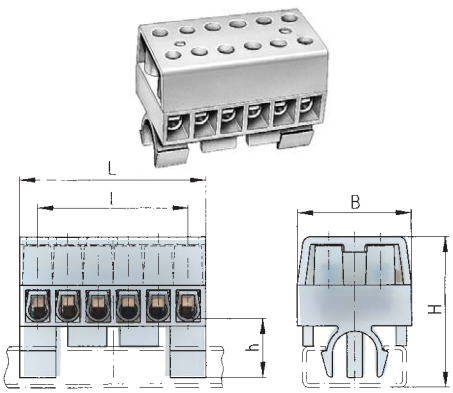

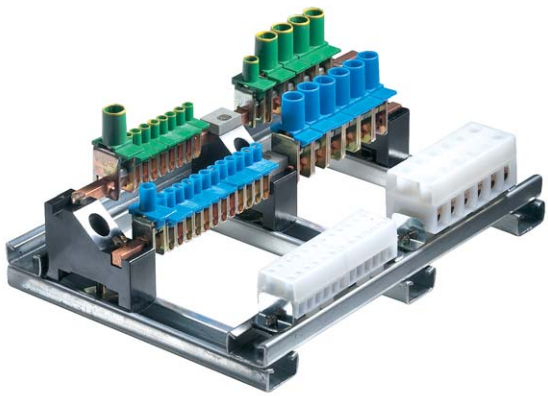

	L	l	H	h	B
4 mm²	35.9	5 x 5.8 = 29	29	14	20
16 mm²	64.5	5 x 10.5 = 52.5	36	14	27.5

Complete sheet-steel distribution systems in accordance with IEC 61 984 and VDE 0108 can be assembled using these components. The widths of the terminals are chosen so that it is easy to identify which terminal is allocated to each individual circuit and so that they match the spacing of the miniature circuit breakers. The PE and N busbar (E-Cu 6 x 6mm) are attached to the busbar mounting brackets. The bare supply and distribution board terminals are pushed onto 6 x 6mm busbars. The PE busbar is attached to the top connection of the bracket and N busbar to the bottom one. The insulate terminals for the phase connections are pushed into the perforated rail from the top. For identifying the individual poles of the
isolated terminals, marker strips are available in rolls numbered in sequences from 1 to 99 for AC circuits and from 101 for DC circuits.

	V	A
DIN VDE 0110	500 V/6 kV/3	

Approvals

		Type	Part no.	Std. pack
Terminal block (up to 10 AWG)		KL28/6DSPA	33.011.0653.0	50
Terminal block (up to 4 AWG)		KL29/6DSPA	33.041.0653.0	20
Accessories for N and PE distribution terminals				
1. PE and N rail carrier with sliding nut				
2. Spacer for separating busbars				
3. Slotted mounting rail				
4. End clamp, 9mm wide				
5. Sliding nut				
6. Jumper bar, insulated for KL28	2pole	IVBIK4-2	Z7.255.0227.0	10
	3pole	IVBIK4-3	Z7.255.0327.0	10
	to 6pole	IVBIK4-6	Z7.255.0627.0	10
7. Marking stip rolls, 60 m each				
for KL 28 and terminal blocks 1-99 Distance				
between figures: 6 mm			04.007.1080.0	1
for KL 29 and terminal block 1-55 Distance				
between figures: 10.8 mm			04.007.3080.0	1

selos

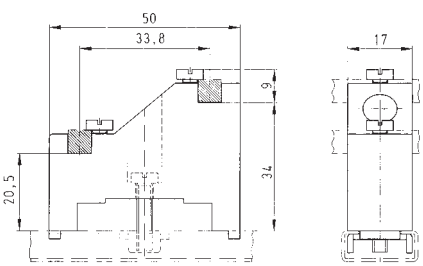

Type	Part no.	Std. pack	Type	Part no.	Std. pack	Type	Part no.	Std. pack
	Z1.990.2030.0	50						
				05.592.1953.0	100			
	98.310.0000.0	10						
						2163	Z5.522.1923.0	100
	05.516.9510.0	100						

Modular N and PE distributor terminals

selos

Material:
Insulated Housing:
Polyamide 66/6

Metal parts:
Steel, zinc plated
dichromated

Bus bar distribution terminals with plastic cover, screw turret, screw break point, and marking ledge.

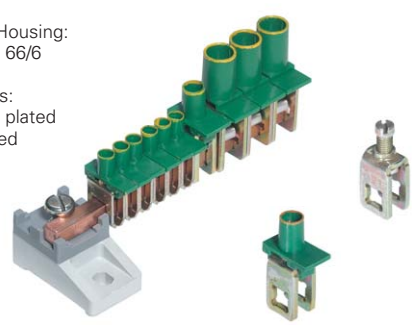

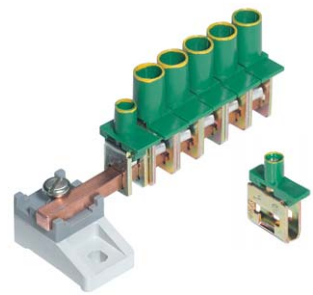

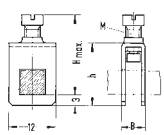

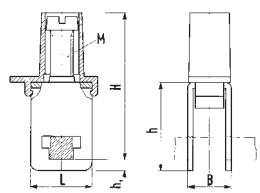

	H	h	M	B
4 mm²	23.6	16	M3.5	6.0
16 mm²	30.8	20.2	M5	9.5

	H	h	h_1	L	M	B
4 mm²	26	16	3	12	M3.5	6,0
16 mm²	33.5	20.2	3	12	M5	10.7
25 mm²	41.5	23.1	2.8	16	M6	11.5
35 mm²	44	25.2	2.8	16	M6	14.3

EN 60998-2-1

Approvals	CCA/CH			CCA/CH		
	Type	Part no.	Std. pack	Type	Part no.	Std. pack
Distribution terminal 4 mm²	WAK4/1	30.494.0010.0	250	WAK4/3	30.494.0110.0	250
Distribution N terminal 4 mm² Cap: blue	WAK4/1 bl	30.494.0010.6	500	WAK4/3 bl	30.494.0110.6	500
Distribution PE terminal 4 mm² Cap: green-yellow	WAK4/1 gr-gb	30.494.0010.7	500	WAK4/3 gr-gb	30.494.0110.7	500
Distribution terminal 16 mm²	WAK16/1	30.494.1010.0	250			
Distribution N terminal 16 mm² Cap: blue	WAK16/1 bl	30.494.1010.6	250			
Distribution PE terminal 16 mm² Cap: green-yellow	WAK16/1 gr-gb	30.494.1010.7	250			
Distribution terminal 25 mm²				WAK25/3	30.494.1110.0	100
Distribution N terminal 25 mm² Cap: blue				WAK25/3 bl	30.494.1110.6	100
Distribution PE terminal 25 mm² Cap: green-yellow				WAK25/3 gr-gb	30.494.1110.7	100
Distribution terminal 35 mm²				WAK35/3	30.494.2510.0	100
Distribution N terminal 35 mm² Cap: blue				WAK35/3 bl	30.494.2510.6	100
Distribution PE terminal 35 mm² Cap: green-yellow				WAK35/3 gr-gb	30.494.2510.7	100
Neutral conductor rail 15x3 mm I_N=140A L = 1 m						
with DIN 85 screws and lock washers						
without screws and washers						
Distributor with busbar 6 x 6 mm accord. to A802						
Accessories						
1. Rail carrier base	KS011/1ZKR	19.230.0040.0	65	KS011/1ZKR	19.230.0040.0	65
2. Busbar 6 x 6 mm E-Cu I_N=140A L = 2 m		98.320.0000.0	1		98.320.0000.0	1
3. Busbar 6 x 6 mm E-Cu I_N=140A L = 1 m		98.325.1000.0	1		98.325.1000.0	1
4. Busbar 10 x 3 mm E-Cu I_N=140A L = 1 m					98.290.0000.0	1
Marking stip rolls, 60 m each						
for KL 28 and terminal blocks 1-99 Distance between figures: 6 mm		04.007.1080.0	1			
for KL 29 and terminal blocks 1-55		04.007.3080.0	1		04.007.1080.0	1
Distance between figures: 10.8 mm						
					04.007.3080.0	1

selos

Bus Bar: brass
Scres and lock washer:
Steel, zinc plated
dichromated

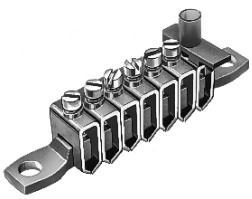

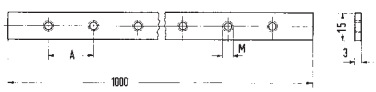

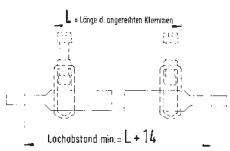

E-Cu
Metal parts:
steel, galv. zinc-plated
and dichromated
Plastic cap
Polyamide 66/6

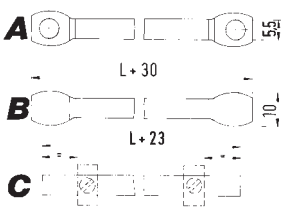

	measure in mm	
	A	M
FKK18/2...	9	4
FKK18/3...	11.4	5
FKK18/1...	20	5

Standard neutral conductor rail screws can be used to fasten the neutral conductor rail. Cross section of threaded holes to measure Ø 5.3 mm.

Type	Part no.	Std. pack	Type	Part no.	Std. pack
FFK18/2Z	Z2.220.0321.0	10			
FFK18/3Z	Z2.220.0421.0	10			
FFK18/1Z	Z2.220.0121.0	10			
FFK18/2	02.220.0321.0	1			
FFK18/3	02.220.0421.0	10			
FFK18/1	02.220.0121.0	1			
			upon request		
KS011/1ZKR	19.230.0040.0	65	KS011/1ZKR	19.230.0040.0	65

Plug-able rail mount terminal with screw technology

selos

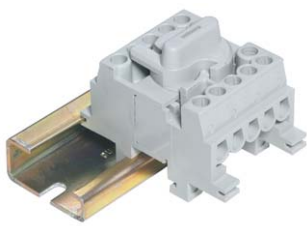

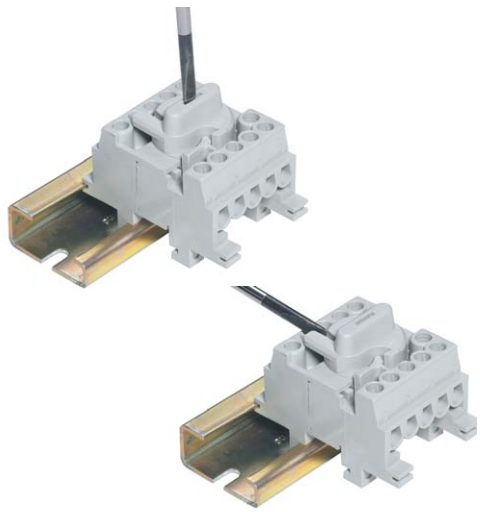

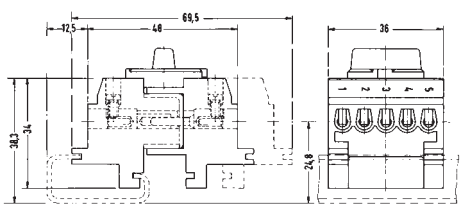

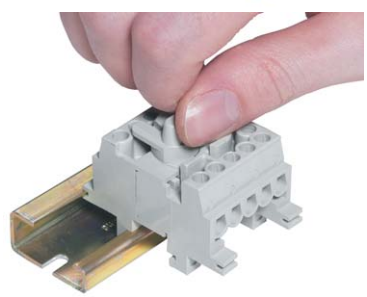

ST 25/5...

	fine stranded	solid	V	A
EN 60 998-2-1/VDE 0613 T2-1	2.5 mm²	2.5 mm²	250 V/4 kV/3	16
UL-ratings	No. 22-12	AWG	300 V	20
CSA ratings	No. 22-14	AWG	300 V	16
Wire strip length				5.5 mm

Approvals

		Type	Part no.	Std. pack
Plug-able connector		ST 25/5 B	93.031.2055.0	50
Rail mount socket				
Plug-able connector w/locking lever		ST 25/5 SV	93.032.2455.0	50
Plug-able connector without locking lever		ST 25/5 S	93.032.2055.0	50
Plug-able connector and rail mount socket				
Accessories				
1. Mounting rail TS 35, DIN rail 7.5mm high	L = 2 m	35 x 27 x 7,5 EN 60715	98.300.0000.0	1
Mounting rail TS 35, DIN rail 1.5mm high	L = 2 m	35 x 24 x 15 EN 60715	98.360.0000.0	1
Mounting rail TS 32 G rail	L = 2 m	9006 EN 60715 G-32	98.190.0000.0	1
2. End clamp with U-foot	10 mm wide	WE 1/U	Z5.523.5753.0	100
End clamp TS 35, with screw	8 mm wide	9708/2 S 35	Z5.522.8553.0	100
End clamp TS 32, with screw	7.5 mm wide	9708	Z5.522.7053.0	100
3. Jumper comb for 5 poles (E-Cu)		VB 11/2	07.250.2527.0	50
Mounting bracket for C rail	M4 and M6			
Mounting base for DIN rail	M3 thread			
	M4 thread			
	M5 thread			
	M6 thread			
Tear-off coding pieces with 10 coding pieces each				
Marking peg (white Polyamide) unmarked		BZ 12	04.232.0051.0	5000
Marking peg (white Polyamide) marked		BZ 12 B	04.832.0051.0	5000
For marking accessories see pages 178-183				

Material:

Insulating housing: fibreglass reinforced Polyamide – tracking resistant

Plug and socket contact: brass, surface treated

Clamping screws: steel, zinc-plated and dichromated

Locking device screws: thermoplastic

The terminal connections have a friction lock to prevent the screws from becoming loose as well as wire protection.

This plug-in connector is available with or without locking levers which operate automatically when connection is made. The connector can be separated either using a screwdriver held in a verticle or horizontal position or by hand.

When operating the connector, the interlocking device acts as a control curve, which separates the two halves of the connector. The individual parts of the connector are identified by embossed consecutive numbers (1 to 5). Each 5 pole block can be identified using a marking plug.

Compact plug-able connector with coding capability

selos

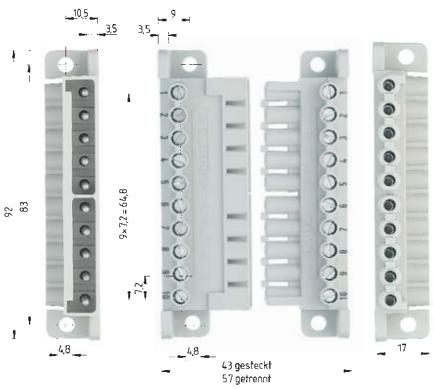

Mounting options: dis-connected
Panel mount or rail mount

Coding diagram for Wieland compact connector type ST 28/10

The plug and socket sections of the compact plug connector each have 8 slots for the coding bar. To do this, a coding piece is inserted in the socket section at the points marked with "B". Likewise, a coding piece is inserted in the plug section at the points marked "S". The best way to code the parts is to separate the plug and socket sections and push the coding bars into the coding slots now facing each other as shown in the diagram.

Then reconnect the socket sections.

The coding bars are supplied in batched of 10 which are connected together to facilitate insertion.

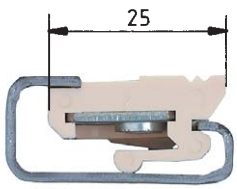

Width 11.5 mm TS M 4/M 6-32

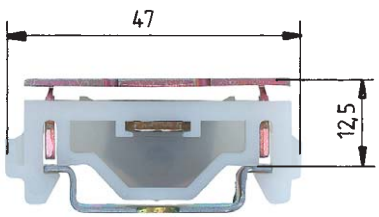

Width 12 mm TS M ... S 35

fine stranded	solid	V	A
2.5 mm²		400 V/6 kV/3	16
No. 22-12	AWG	300 V	20
No. 22-14	AWG	300 V	16
			5.5 mm

VDE-PB

Type	Part no.	Std. pack
ST 28/10 B	93.001.1055.0	10
ST 28/10 S	93.002.1055.0	10
ST 28/10 BS	93.003.1055.0	10
35 x 27 x 7,5 EN 60715	98.300.0000.0	1
35 x 24 x 15 EN 60715	98.360.0000.0	1
WE 1/U	Z5.523.5753.0	100
	Z5.522.8553.0	
	05.594.5153.0	100

Coding:

S B B B	B B B S	1. configuration
S B B B	B B S B	2. configuration
S B B B	B S B B	3. configuration
S B B B	S B B B	4. configuration
S B B S	B B B B	5. configuration
S B S B	B B B B	6. configuration
S S B B	B B B B	7. configuration
B S B B	B B B S	8. configuration
B S B B	B B S B	9. configuration
B S B B	B S B B	10. configuration
B S B B	S B B B	11. configuration
B S B S	B B B B	12. configuration
B S S B	B B B B	13. configuration
B B S B	B B B S	14. configuration
		etc.

Type	Part no.	Std. pack
TS M 4/M 6-32	69.332.0000.0	100
TS M 3 S 35	69.335.0253.0	100
TS M 4 S 35	69.335.0453.0	100
TS M 5 S 35	69.335.0553.0	100
TS M 6 S 35	69.335.0653.0	100

Modular panel mount terminals with solder/push-on connectors

selos

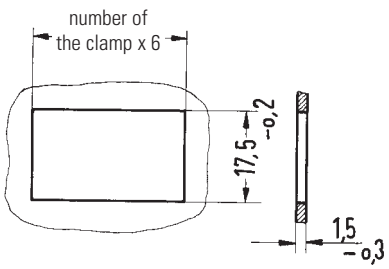

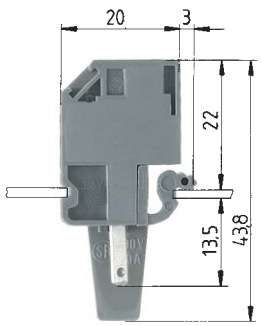

Solder tab connector 2.8 x 0.8 mm for push-on connector B 2.8 x 1 accord. to DIN 46247 Bl. 1

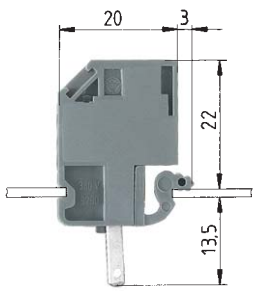

Solder tab connector 2.8 x 0.8 mm for push-on connector B 2.8 x 1 accord. to DIN 46247 Bl. 1

		fine stranded	solid	V	A	fine stranded	solid	V	A
EN 60 947-7-1/DIN VDE 0611 T1		0.5 - 2.5 mm²	0.5 - 2.5 mm²	400 V/4 kV/3	10	0.5 - 2.5 mm²	0.5 - 2.5 mm²	400 V/4 kV/3	10
UL-ratings		No. 22-12 AWG		150 V	20	No. 22-12 AWG		150 V	20
CSA ratings		No. 22-14 AWG		300 V	10				
Width	Wire strip length	6 mm			8 mm	6 mm			8 mm
Approvals									

		Type	Part no.	Std. pack	Type	Part no.	Std. pack
Panel mount terminal		9290 S	59.900.2552.0	200			
Panel mount terminal	without partition				9290 L	59.900.2052.0	200
- Color: blue -	for EEx i installations				9290 L BLAU	59.900.2053.6	200

For marking systems see pages 178-183 and 250-251

selos

IDC DIN rail terminal blocks, type *WKC*

taris

IDC connection for:

Standard DIN rail terminal blocks

Duo terminal blocks

Multi-tier terminal blocks

Disconnect blocks

taris connects copper wires **easily, fast** and **safely**

taris for TS 35

- no wire stripping, no ferrules
- no special tools - a screwdriver is all you need
- 60 % time savings = reduced costs
- low packing density (5 mm wide)
- optical control of the switching state
- cross sections up to 1.0 mm^2 and 2.5 mm^2

All Wieland Components which require CE general certification are CE certified, and identified with the CE logo.

taris

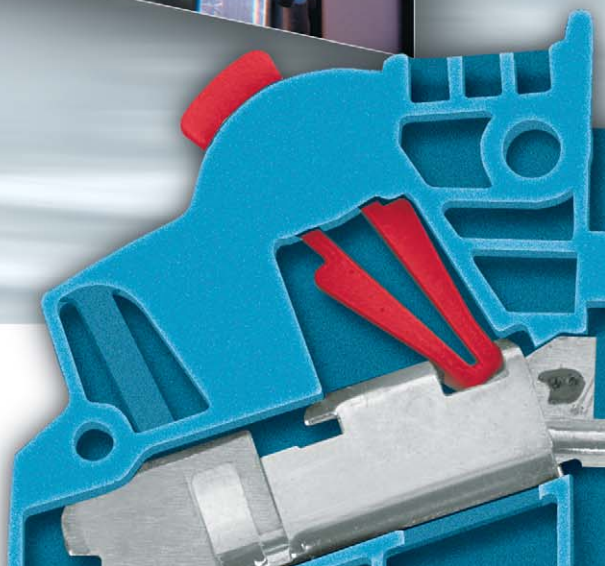

IDC DIN rail terminal blocks

type *WKC*

IDC DIN rail terminal blocks, type *WKC*

taris

	1.0 mm²	2.5 mm²
Feed-through blocks	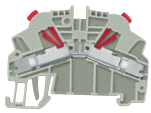	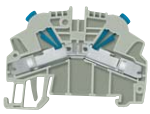
Neutral feed-through blocks	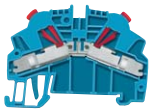	
Ground blocks	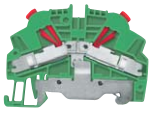	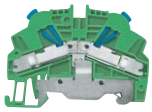

taris

Standard DIN rail terminal blocks

	1.0 mm²	2.5 mm²
Feed through blocks		
Ground blocks	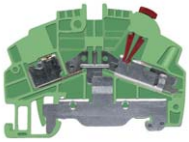	

taris

Hybrid DIN rail terminal blocks

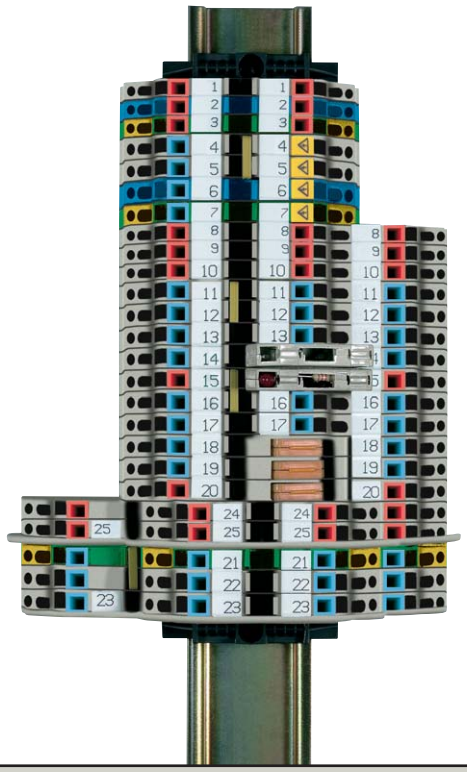

	1.0 mm²	2.5 mm²
Double-tier block	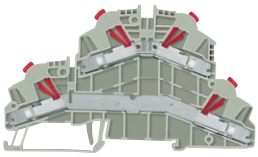	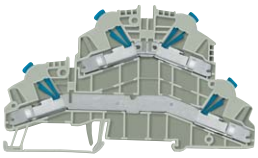
Double-tier blocks as function blocks, possible diode switches upon request		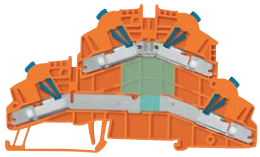 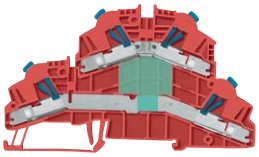

taris

Double-tier blocks

Duo 1/2

	1.0 mm²	2.5 mm²
Feed-through blocks	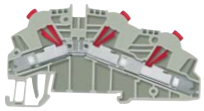	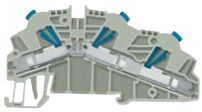
Neutral feed-through blocks	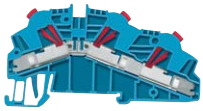	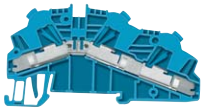
Ground blocks	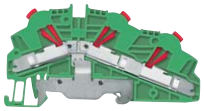	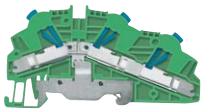

Duo 2/2

	1.0 mm²	2.5 mm²
Feed-through blocks	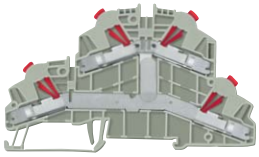	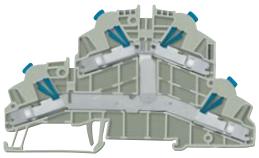
Neutral feed-through blocks	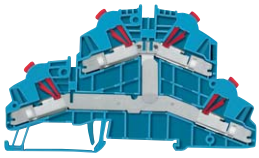	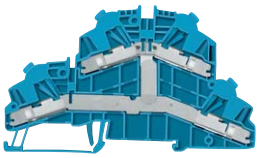
Ground blocks	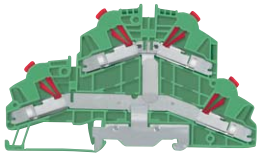	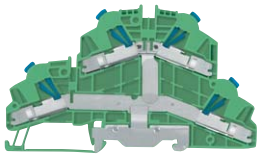

Duo DIN rail terminal blocks

Disconnect blocks

	1.0 mm²	2.5 mm²
Knife edge disconnect blocks		
Disconnect blocks with fuse plug		
Disconnect blocks with diode plug	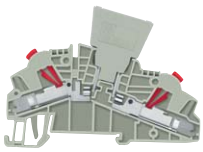	

IDC DIN rail terminal blocks
type *WKC*
taris

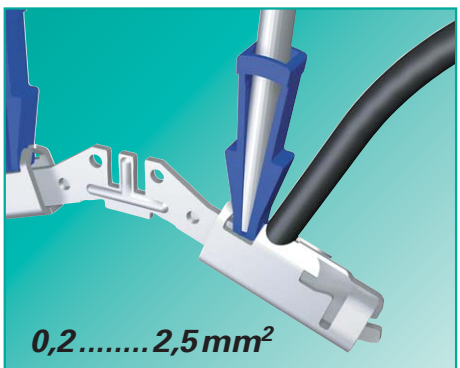

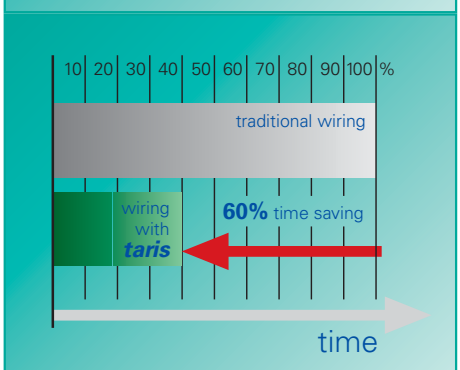

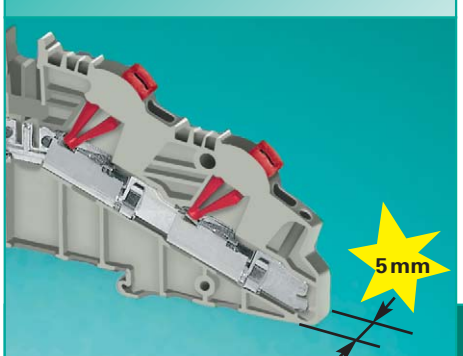

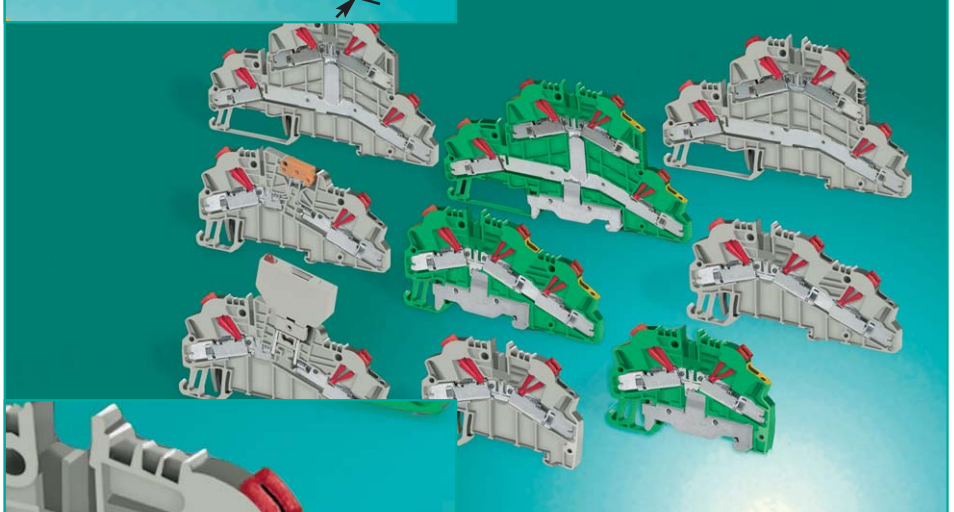

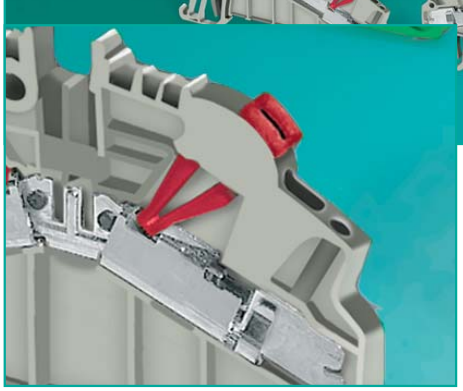

taris technology

❒ Wieland's ***taris*** (WKC) Series represents the industry's most comprehensive line of advanced IDC (insulation displacement contact) technology terminal blocks. The superior design of the ***taris*** IDC contact system reduces wiring installation time and labor, expecially in high volume wiring applications. ***taris*** IDC terminal blocks are suitable for applications in automated equipment and machine tools, packaging and material handling machinery, railway/mass transit sytems, petrochemical, and any applications requiring high-volume interconnects for low-voltage control and signal cicuitry where labor cost reduction and ease of assembly is a goal.

taris features

❒ The industry's narrowest blocks at just 5 mm and 6 mm wide

❒ Operates with a standard screwdriver

❒ Dual jumpering slots

❒ Built-In test points

❒ Contact design moves the clamp to engage the wire

❒ Top-entry system puts the wire entry and the screwdriver access in the same plane

❒ Tin-plated copper alloy contact material

❒ UL 94-VO non-flammability rating on the polyamide 66/6 insulation material

benefits ....

→ uses less space in the cabinet

→ No special tools required

→ Flexibility in commoning potentials of adjacent blocks

→ Provide true measurement reading without removing wires

→ Ensures secure, gas-tight and vibration-resistant connection even when the wire length is maxed out

→ Easy circuit identification and trouble-shooting

→ Corrosion resistant connection

→ Increased safety

→ Easy installation even in confined spaces

❒ ***taris*** is designed for long-term use under demanding conditions

WKC series terminal block versions

❒ Feed-through

❒ Ground

❒ Disconnect

❒ Fuse

❒ Arc suppression

❒ Reverse polarity protection

❒ 1-in, 2-out feed-through

❒ 1-in, 2-out ground

❒ Double-tier feed-through

❒ Double-tier ground

❒ Voltage indication

taris

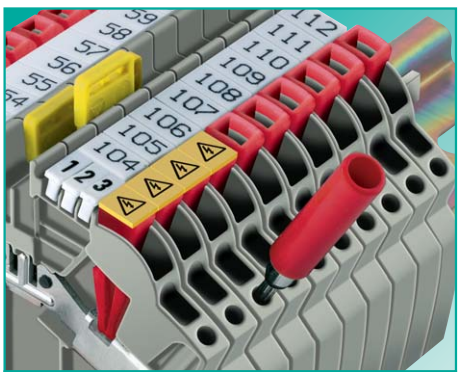

Test plug

- All ***taris*** IDC DIN rail terminal blocks feature built in test points so that measuring values can be taken without removing the wire.
- Entry guides on each side of the blocks permit measuring with standard 2.3 mm test probes and test plugs for easy maintenance and trouble-shooting

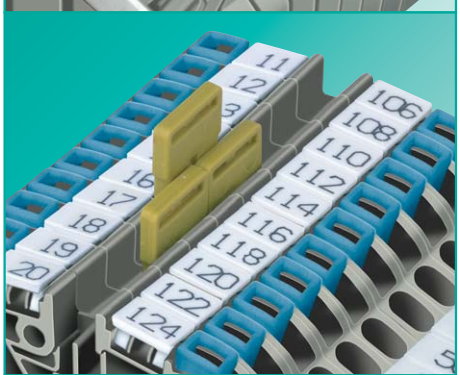

Cross connection

- IVB WKF insulated cross connectors offer complete protection from shock-hazard per EN 60352-3/4 and EN 60947-7-1.
- Partition plates between neighboring cross connections are not necessary to meet creepage requirements.
- IVB WKF cross connecotrs bear the same rated current as the terminal block

Marking facilities

- single marking tags
- Snap=On marking strips
- Tear-off marking stripsl
- Custom marking options

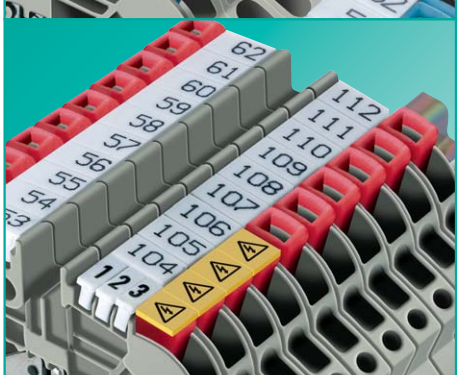

ADC warning cover

- ***taris*** offers a Sanp-On cover with the ADC warning symbol to prevent tampering of blocks which remain live after the system is switched off. A tool is required to remoce the cover for added safety.

DQS certificates for all products

- Quality standard as per DIN ISO 9001 in Development, Production, Assembly
- Continued control of the quality standard by means of regular internal and external quality audits
- Compatible with certificates of other countries:
  - BSI Certificate, Great Britain
  - SQS Certificate, Switzerland
  - Aib-Vincotte Certificate, Belgium
  - ÖQS Certificate, Austria

taris material

- taris utilizes special alloys and surface treatments to provide low contact resistance and a high degree of protection from corrosion. ***taris*** material composition makes it suitable for use under extreme conditions and guarantees a long-term stable connection.

taris metal compositions

- clamping body and current bar constructed of tin-plated copper
- ground foot is contructed of tin-plated brass

taris insulating housing compositions

- housings are constructed of polyamide 6.6 for its excellent mechanical, electrical and chemical properties
- UL 94-VO non-flammability rating, the best in the industry

(see also section ***facts*** & DATA)

Our ***wieplan*** software helps to plan your DIN rail terminal block assemblies (see page 10/11).

Note

The information regarding cross-sectional areas and connection types pertains to wires without ferrules. Ferrules are not neccessary for secure connection.

The voltage ratings apply to the terminals in their intended application. When different products are mounted adjacent to each other, the proper isolation distances must be adhered to. For this purpose, **Wieland** offers a large selection of appropiate accessories.

A detailed description of technical data, the standards requirements, and the application conditions can be found in catalog section ***facts*** & DATA.

Concept

taris

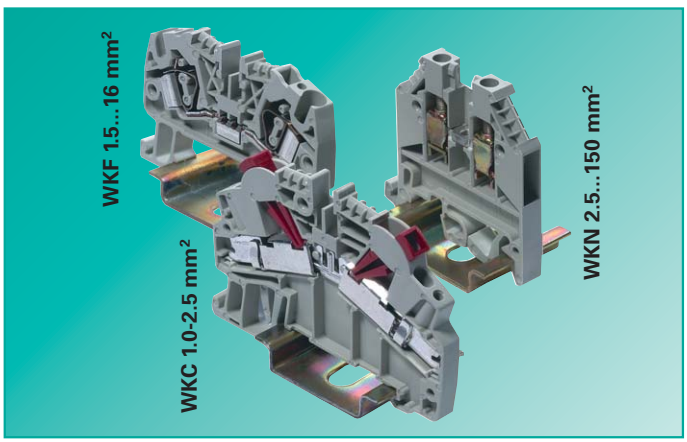

taris

With the addition of ***taris*** IDC terminal blocks, Wieland now offers the broadest range of screw clamp, spring clamp. and IDC technology, to provide the best possible connection for any control cabinet application. At just 5mm and 6mm wide, the ***taris*** series includes the industry's narrowest IDC block capable of accepting 14 AWG. Like other Wieland products, ***taris*** is designed with superior function and quality in mind, thereby offering the most features and benefits of any terminal block on the market. To lower production costs or reduce installation and maintenance time, Wieland's ***taris*** WKC series terminal blocks offer the connection technology you need.

The 2-second connection

Terminating copper wires is easy, fast and safe with *taris*.

- **Easy** – Cut the wire to length and insert into the wire entry guide. Move the clamping body into the wire by inserting and levering a standard flat screwdriver
- **Fast** – There is no prep time with ***taris*** - no wire stripping and no ferruling. ***taris*** reduces installation time by as much as 60%.
- **Safe** – the wire does not move during the operation - no risk of losing the wires. No live parts are able to be touched due to the design of the insulating housing. Jumpers are isulated as well.

***taris* makes disconnecting wires just as easy, fast and safe.**

- It is possible to re-use spliced wires with ***taris*** by cutting the end of the wire before each new/re-termination
- After connecting a larger wire, a smaller diameter wire can be connected to the same contact.

A color-coded screwdriver guide indicates the rated cross section of the terminal block:

- WKC 1 30-18 AWG red indicator
- WKC 2.5 18-14 AWG blue indicator

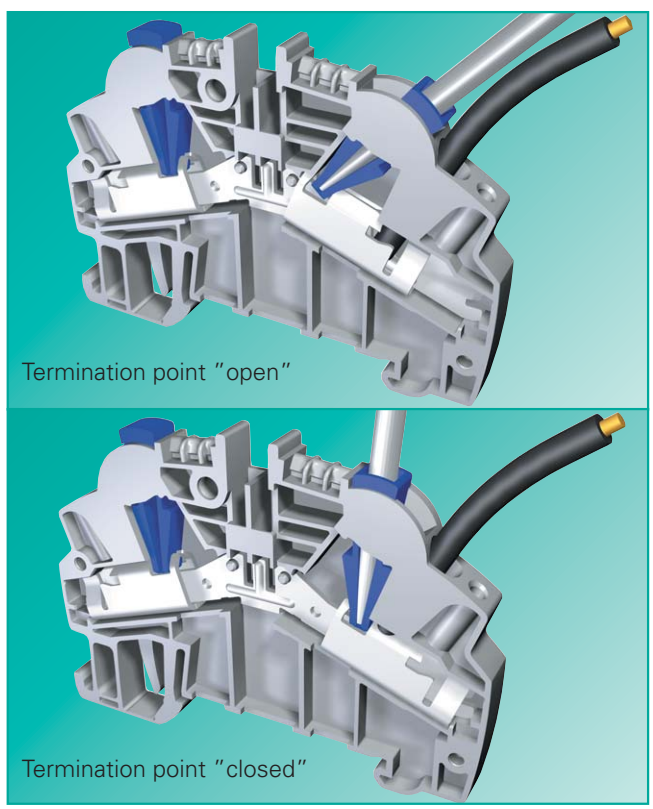

Wire specifications

taris terminates solid or fine stranded copper wires with AWG between 24 and 14 with two size of terminal blocks.

WKC ...1 : copper wire between AWG 24-18; 5mm wide terminal block
WKC ...2,5: copper wire between AWG 18-14; 6mm wide terminal block

Standard control wire with PVC- and PE- insulation can be terminated

Wire with other insulation material can also be terminated, please consult Wieland for recommendation

For fine stranded copper wires, the wire diameter must be a minimum of 0.2mm. the composition of conductors is based on DIN VDE 0295

K1, 1-5.

taris

Wire connection

Insert the wire into the clamping body through the wire entry guide.Insert a flat screwdriver into the colored screwdriver guide and push the screwdriver forward to move the clamping body into the wire. This action cuts into the insulation of the wire at two defined points with proper contact and no damage to the copper wire. The result is a gas tight, vibration and corrosion resistant contact.

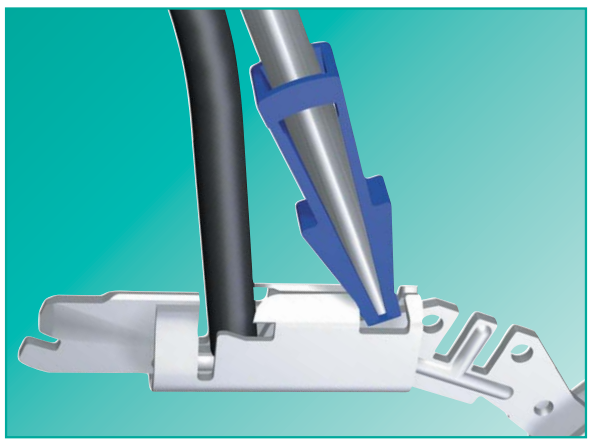

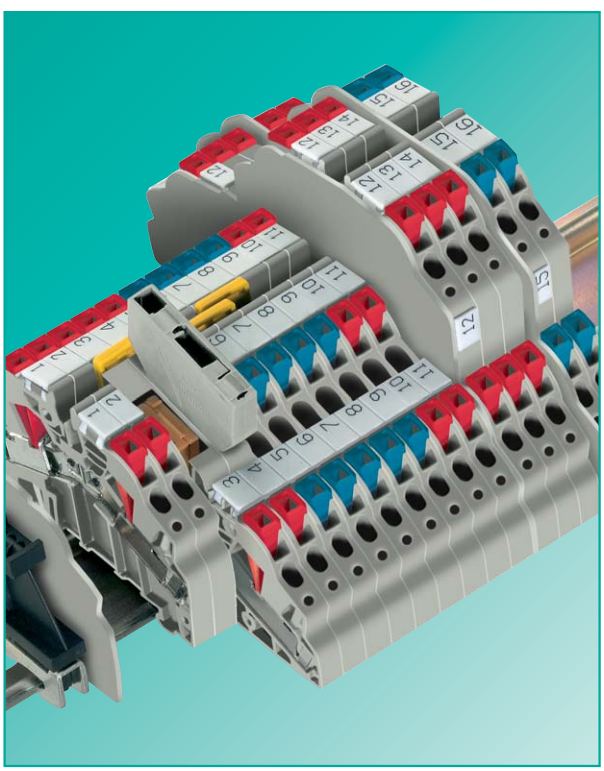

The *taris* series

For variuos application requirements, ***taris*** offers a variety of terminal blocks in two different ranges of AWG cross sections. Both cross sections have the same contour outside for a clean symmetrical look along the DIN rail.

Standard terminals

- DIN rail terminal blocks as feed-through and ground blocks with one termination point on each side of the terminal block
- DIN rail terminal blocks with two jumpering slots provide flexibility in commoning potentials
- DIN rail terminal blocks with marking facilities on every termination point
- DIN rail terminal blocks with test points for test probes on every termination point

Duo terminals

- Duo DIN rail terminal blocks with more than two termination points for one potential
- Duo DIN rail terminal blocks as feed-through and ground blocks in D 1/2 and D2/2 version
- Duo DIN rail terminal blocks D 1/2 can be jumpered with the standard DIN rail terminal blocks

Disconnect terminals

- as knife edge disconnect blocks or disconnect blocks for diode or fuse plugs
- can be jumpered with standard or Duo 1/2 DIN rail terminals.

Double-deck rail terminals

- double-tier blocks with same contour as Duo 2/2 blocks.
- double-tier blocks as function block for diode switchings

Accessories

- ***taris*** utilizes Wieland's standard marking system
- ***taris*** utilizes the same insulated cross connectors as Wieland's WKF series spring clamp connection technology for potential commoning.
- For more complex connections, ***taris*** uses the disconnect block with fuse plug SIST or diode plug DIST for WK or WKF series.
- For visual separation of termainl block groups, ***taris*** offers partitions and end plates, which also maintain shock-hazard protection.
- taris features built-in test points which accomodate Wieland test plugs or test probes from standaed meters for way maintenance and trouble-shooting.

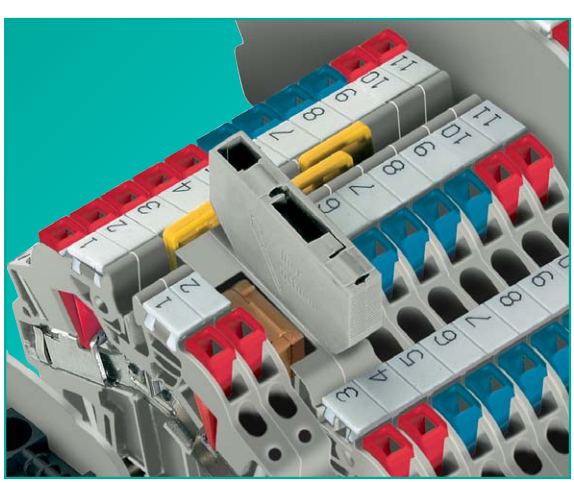

IDC DIN rail terminal blocks, type *WKC*

taris

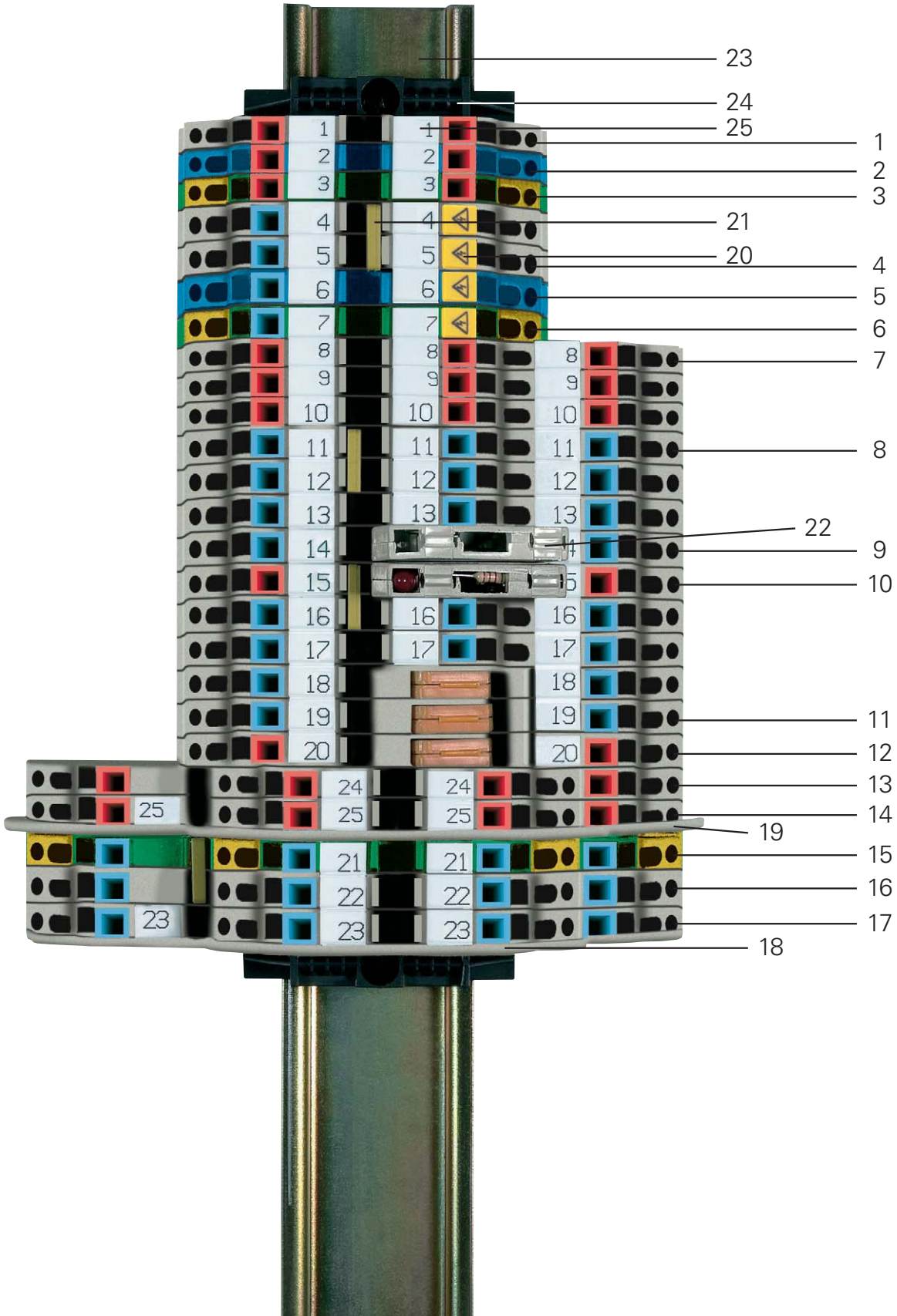

taris sample rail

taris

Pos.	Description	Type	Part no.
1	Feed-through block	WKC 1/35	56.301.0053.0
2	Feed-through block, blue	WKC 1/35 BLAU	56.301.0053.6
3	Ground block	WKC 1 SL/35	56.301.9053.0
4	Feed-through block	WKC 2,5/35	56.303.0053.0
5	Feed-through block, blue	WKC 2,5/35 BLAU	56.303.0053.6
6	Ground block	WKC 2,5 SL/35	56.303.9053.0
7	Duo feed-through block	WKC 1 D1/2/35	56.301.5053.0
8	Duo feed-through block	WKC 2,5 D1/2/35	56.303.5053.0
9	Disconnect block	WKC 2,5 TKG/35	56.303.4053.0
10	Disconnect block	WKC 1 TKG/35	56.301.4053.0
11	Knife edge disconnect block	WKC 2,5 TKM/35	56.303.2053.0
12	Knife edge disconnect block	WKC 1 TKM/35	56.301.2053.0
13	Duo feed-through block	WKC 1 D2/2/35	56.301.5153.0
14	Double-tier block	WKC 1 E/35	56.301.7053.0
15	Duo-ground block	WKC 2,5 D2/2/SL/35	56.303.9153.0
16	Duo-feed-through block	WKC 2,5 D2/2/35	56.303.5153.0
17	Double-tier block	WKC 2,5 E/35	56.303.7053.0
18	End plate	APC 1-2,5 D2./E.	07.312.5453.0
19	Partition plate	TWC 1-2,5 D2./E.	07.312.5553.0
20	Cover with warning symbol	ADC 2,5 GELB	04.344.0353.8
21	Jumper bar, insulated	IVB WKF 4-2	Z7.261.1227.0
22	Fuse plug (G 5x20)	SIST	Z1.299.4053.0
23	Mounting rail	35x27x7,5 EN 60715	98.300.0000.0
24	End clamp	9708/2 S35	Z5.522.8553.0
25	Marking strips	9705 A/5/10 B	04.842.5053.0

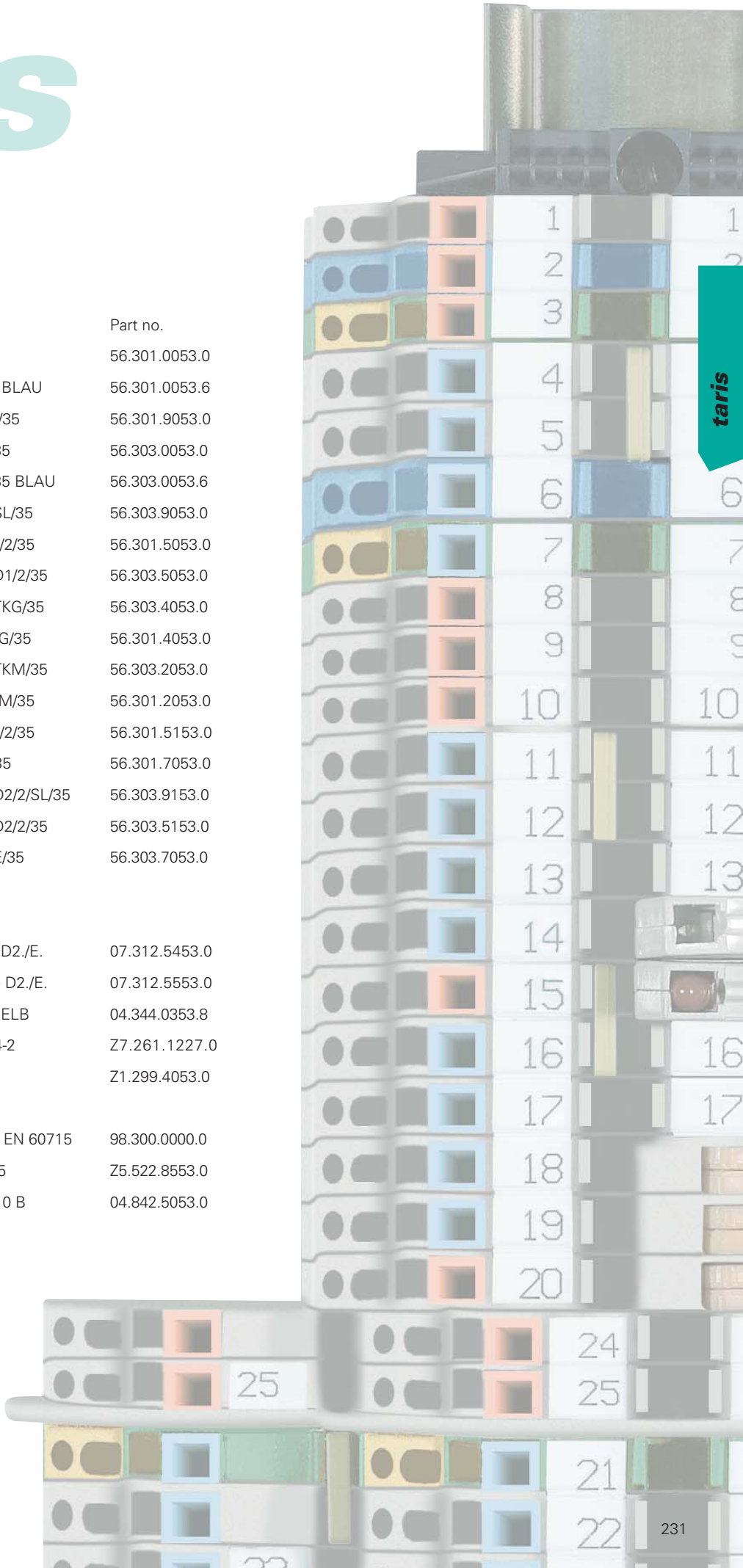

IDC feed-through blocks, type *WKC*

taris

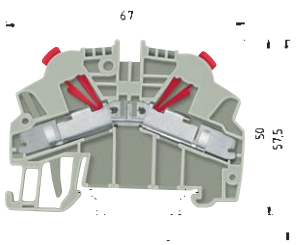

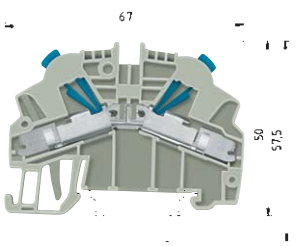

		WKC 1/35				WKC 2.5/35			
		fine stranded	solid	V	A	fine stranded	solid	V	A
EN 60 947-7-1		0.2 – 1 mm²	0.2 – 1 mm²	800 V/8 kV/3	13.5	1 – 2.5 mm²	1 – 2.5 mm²	800 V/8 kV/3	24
UL ratings		No. 30-18 AWG		600 V	13	No. 18-14 AWG		600 V	22
CSA ratings		No. 24-18 AWG		600 V	13	No. 16-14 AWG		600 V	20
Width	Rated cross section	5 mm			1 mm²	6 mm			2.5 mm²
Approvals		KEMA KEUR, UL, * CSA, **				KEMA KEUR, UL, * CSA, **			

		Type	Part no.	Std. pack	Type	Part no.	Std. pack
Feed-through block	Color: gray	WKC 1/35	56.301.0053.0	100	WKC 2,5/35	56.303.0053.0	100
Feed-through block	Color: blue	WKC 1/35 BLAU	56.301.0053.6	100	WKC 2,5/35 BLAU	56.303.0053.6	100
Accessories							
1. Mounting rail 35, 7.5 mm high	L = 2 m	35 x 27 x 7,5 EN 60715	98.300.0000.0	1	35 x 27 x 7,5 EN 60715	98.300.0000.0	1
Mounting rail 35, 15 mm high	L = 2 m	35 x 24 x 15 EN 60715	98.360.0000.0	1	35 x 24 x 15 EN 60715	98.360.0000.0	1
2. End clamp for TS 35	8 mm wide	9708/2 S 35	Z5.522.8553.0	100	9708/2 S 35	Z5.522.8553.0	100
End clamp for TS 35, screwless	8 mm wide	WEF 1/35	Z5.523.9353.0	100	WEF 1/35	Z5.523.9353.0	100
3. End plate	Color: gray	APC 1-2,5	07.312.5053.0	10	APC 1-2,5	07.312.5053.0	10
	Color: blue	APC 1-2,5 BLAU	07.312.5053.6	10	APC 1-2,5 BLAU	07.312.5053.6	10
	Color: green						
4. Partition plate	Color: gray	TWC 1-2,5	07.312.5153.0	10	TWC 1-2,5	07.312.5153.0	10
	Color: blue	TWC 1-2,5 BLAU	07.312.5153.6	10	TWC 1-2,5 BLAU	07.312.5153.6	10
5. Jumper bar,	2pole	IVB WKF 2,5-2	Z7.280.6227.0	10	IVB WKF 4-2	Z7.261.1227.0	10
insulated	3pole	IVB WKF 2,5-3	Z7.280.6327.0	10	IVB WKF 4-3	Z7.261.1327.0	10
	4pole	IVB WKF 2,5-4	Z7.280.6427.0	10	IVB WKF 4-4	Z7.261.1427.0	10
	5pole	IVB WKF 2,5-5	Z7.280.6527.0	10	IVB WKF 4-5	Z7.261.1527.0	10
	6pole	IVB WKF 2,5-6	Z7.280.6627.0	10	IVB WKF 4-6	Z7.261.1627.0	10
	7pole	IVB WKF 2,5-7	Z7.280.6727.0	20	IVB WKF 4-7	Z7.261.1727.0	20
	8pole	IVB WKF 2,5-8	Z7.280.6827.0	20	IVB WKF 4-8	Z7.261.1827.0	20
	9pole	IVB WKF 2,5-9	Z7.280.6927.0	20	IVB WKF 4-9	Z7.261.1927.0	20
	10pole*	IVB WKF 2,5-10	Z7.280.7027.0	20	IVB WKF 4-10	Z7.261.2027.0	20
6. Cover w. warning symbol over 4 blocks		ADC 1 GELB	04.344.0153.8	10	ADC 2,5 GELB	04.344.0353.8	10
7. Test plug		WK 2,5 ST 2/2,3	Z5.553.2921.0	10	WK 2,5 ST 2/2,3	Z5.553.2921.0	10
8. Screw driver, uninsulated		DIN 5264 B 0,6 x 3,5	06.502.4000.0	5	DIN 5264 B 0,6 x 3,5	06.502.4000.0	5
*Available up to 20 pole		* CL I, ZN1, AExe II			* CL I, ZN1, AExe II		
Marking accessories also see page 178-179 and 250-251		**CL I, ZN1, Exe II			**CL I, ZN1, Exe II		

IDC ground blocks, type *WKC*

taris

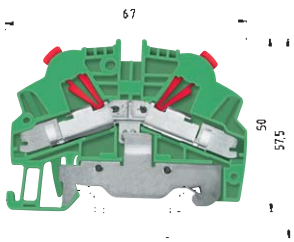

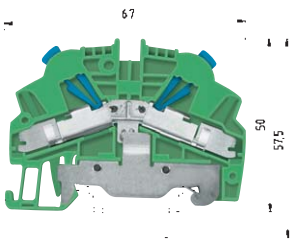

		WKC 1 SL/35				WKC 2,5 SL/35			
		fine stranded	solid	V	A	fine stranded	solid	V	A
EN 60 947-7-2		0.2 – 1 mm²	0.2 – 1 mm²	800 V/8 kV/3	13.5	1 – 2.5 mm²	1 – 2.5 mm²	800 V/8 kV/3	24
UL ratings		No. 30-18 AWG		600 V		No. 18-14 AWG		600 V	
CSA ratings		No. 24-18 AWG				No. 16-14 AWG			
Width	Rated cross section	5 mm			1 mm²	6 mm			2.5 mm²
Approvals		KEMA KEUR UL * CSA **				KEMA KEUR UL * CSA **			

		Type	Part no.	Std. pack	Type	Part no.	Std. pack
Ground block	Color: green/yellow	WKC 1 SL/35	56.301.9053.0	100	WKC 2,5 SL/35	56.303.9053.0	100
Accessories							
1. Mounting rail 35, 7.5 mm high	L = 2 m	35 x 27 x 7,5 EN 60715	98.300.0000.0	1	35 x 27 x 7,5 EN 60715	98.300.0000.0	1
Mounting rail 35, 15 mm high	L = 2 m	35 x 24 x 15 EN 60715	98.360.0000.0	1	35 x 24 x 15 EN 60715	98.360.0000.0	1
2. End clamp for TS 35	8 mm wide	9708/2 S 35	Z5.522.8553.0	100	9708/2 S 35	Z5.522.8553.0	100
End clamp for TS 35, screwless	8 mm wide	WEF 1/35	Z5.523.9353.0	100	WEF 1/35	Z5.523.9353.0	100
3. End plate	Color: gray						
	Color: blue						
	Color: green	APC 1-2,5 GRÜN	07.312.5053.7	10	APC 1-2,5 GRÜN	07.312.5053.7	10
4. Partition plate	Color: gray						
	Color: blue						
5. Jumper bar,	2pole						
insulated	3pole						
	4pole						
	5pole						
	6pole						
	7pole						
	8pole						
	9pole						
	10pole						
6. Cover w. warning symbol over 4 blocks		ADC 1 GELB	04.344.0153.8	10	ADC 2,5 GELB	04.344.0353.8	10
7. Test plug		WK 2,5 ST 2/2,3	Z5.553.2921.0	10	WK 2,5 ST 2/2,3	Z5.553.2921.0	10
8. Screw driver, unisoliert		DIN 5264 B 0,6 x 3,5	06.502.4000.0	5	DIN 5264 B 0,6 x 3,5	06.502.4000.0	5
		* CL I, ZN1, AExe II			* CL I, ZN1, AExe II		
		**CL I, ZN1, Exe II			**CL I, ZN1, Exe II		

IDC duo feed-through blocks, type *WKC*

taris

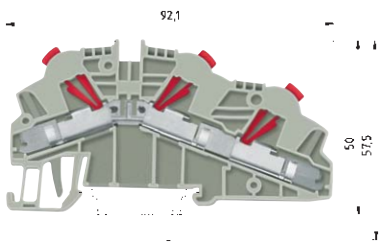

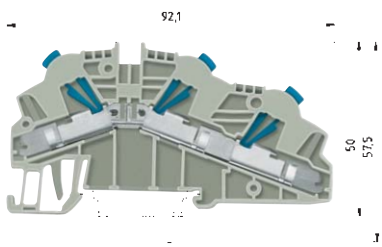

		WKC 1 D1/2/35				WKC 2.5 D1/2/35			
		fine stranded	solid	V	A	fine stranded	solid	V	A
EN 60 947-7-1		0.2 – 1 mm²	0.2 – 1 mm²	800 V/8 kV/3	13.5	1 – 2.5 mm²	1 – 2.5 mm²	800 V/8 kV/3	24
UL ratings		No. 30-18 AWG		600 V	13	No. 18-14 AWG		600 V	22
CSA ratings		No. 24-18 AWG		600 V	13	No. 16-14 AWG		600 V	20
Width	Rated cross section	5 mm			1 mm²	6 mm			2.5 mm²
Approvals		KEMA UL * CSA **				KEMA UL * CSA **			

		Type	Part no.	Std. pack	Type	Part no.	Std. pack
Duo feed-through block	Color: gray	WKC 1 D1/2/35	56.301.5053.0	50	WKC 2,5 D1/2/35	56.303.5053.0	50
Duo feed-through block	Color: blue	WKC 1 D1/2/35 BLAU	56.301.5053.6	50	WKC 2,5 D1/2/35 BLAU	56.303.5053.6	50
Accessories							
1. Mounting rail 35, 7.5 mm high	L = 2 m	35 x 27 x 7,5 EN 60715	98.300.0000.0	1	35 x 27 x 7,5 EN 60715	98.300.0000.0	1
Mounting rail 35, 15 mm high	L = 2 m	35 x 24 x 15 EN 60715	98.360.0000.0	1	35 x 24 x 15 EN 60715	98.360.0000.0	1
2. End clamp for TS 35	8 mm wide	9708/2 S 35	Z5.522.8553.0	100	9708/2 S 35	Z5.522.8553.0	100
End clamp for TS 35, screwless	8 mm wide	WEF 1/35	Z5.523.9353.0	100	WEF 1/35	Z5.523.9353.0	100
3. End plate	Color: gray	APC 1-2,5 D1./TK.	07.312.5253.0	10	APC 1-2,5 D1./TK.	07.312.5253.0	10
	Color: blue	APC 1-2,5 D1./TK.BLAU	07.312.5253.6	10	APC 1-2,5 D1./TK.BLAU	07.312.5253.6	10
	Color: green						
4. Partition plate	Color: gray	TWC 1-2,5 D1.	07.312.5353.0	10	TWC 1-2,5 D1.	07.312.5353.0	10
	Color: blue	TWC 1-2,5 D1. BLAU	07.312.5353.6	10	TWC 1-2,5 D1. BLAU	07.312.5353.6	10
5. Jumper bar,	2pole	IVB WKF 2,5-2	Z7.280.6227.0	10	IVB WKF 4-2	Z7.261.1227.0	10
insulated	3pole	IVB WKF 2,5-3	Z7.280.6327.0	10	IVB WKF 4-3	Z7.261.1327.0	10
	4pole	IVB WKF 2,5-4	Z7.280.6427.0	10	IVB WKF 4-4	Z7.261.1427.0	10
	5pole	IVB WKF 2,5-5	Z7.280.6527.0	10	IVB WKF 4-5	Z7.261.1527.0	10
	6pole	IVB WKF 2,5-6	Z7.280.6627.0	10	IVB WKF 4-6	Z7.261.1627.0	10
	7pole	IVB WKF 2,5-7	Z7.280.6727.0	20	IVB WKF 4-7	Z7.261.1727.0	20
	8pole	IVB WKF 2,5-8	Z7.280.6827.0	20	IVB WKF 4-8	Z7.261.1827.0	20
	9pole	IVB WKF 2,5-9	Z7.280.6927.0	20	IVB WKF 4-9	Z7.261.1927.0	20
	10pole	IVB WKF 2,5-10	Z7.280.7027.0	20	IVB WKF 4-10	Z7.261.2027.0	20
6. Cover w. warning symbol over 4 blocks		ADC 1 GELB	04.344.0153.8	10	ADC 2,5 GELB	04.344.0353.8	10
7. Test plug		WK 2,5 ST 2/2,3	Z5.553.2921.0	10	WK 2,5 ST 2/2,3	Z5.553.2921.0	10
8. Screw driver, uninsulated		DIN 5264 B 0,6 x 3,5	06.502.4000.0	5	DIN 5264 B 0,6 x 3,5	06.502.4000.0	5
10. Marking accessories		also see page 250/251			9705 A/5/10	04.242.5053.0	25
		* CL I, ZN1, AExe II			* CL I, ZN1, AExe II		
		**CL I, ZN1, Exe II			**CL I, ZN1, Exe II		

IDC duo ground blocks, type *WKC*

taris

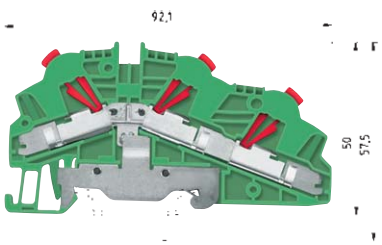

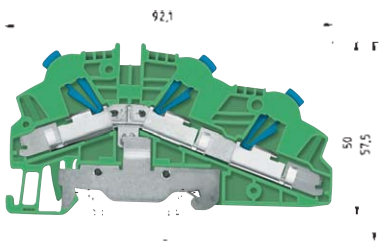

		WKC 1 D1/2/SL/35				WKC 2.5 D1/2/SL/35			
		fine stranded	solid	V	A	fine stranded	solid	V	A
EN 60 947-7-2		0.2 – 1 mm²	0.2 – 1 mm²	800 V/8 kV/3	13.5	1 – 2.5 mm²	1 – 2.5 mm²	800 V/8 kV/3	24
UL ratings		No. 30-18 AWG		600 V	13	No. 18-14 AWG		600 V	22
CSA ratings		No. 24-18 AWG				No. 16-14 AWG			
Width	Rated cross section	5 mm			1 mm²	6 mm			2.5 mm²
Approvals		KEMA KEUR UL * CSA **				KEMA KEUR UL * CSA **			

		Type	Part no.	Std. pack	Type	Part no.	Std. pack
Duo ground block	Color: green/yellow	WKC 1 D1/2/SL/35	56.301.9353.0	50	WKC 2,5 D1/2/SL/35	56.303.9353.0	50
Accessories							
1. Mounting rail 35, 7.5 mm high	L = 2 m	35 x 27 x 7,5 EN 60715	98.300.0000.0	1	35 x 27 x 7,5 EN 60715	98.300.0000.0	1
Mounting rail 35, 15 mm high	L = 2 m	35 x 24 x 15 EN 60715	98.360.0000.0	1	35 x 24 x 15 EN 60715	98.360.0000.0	1
2. End clamp for TS 35	8 mm wide	9708/2 S 35	Z5.522.8553.0	100	9708/2 S 35	Z5.522.8553.0	100
End clamp for TS 35, screwless	8 mm wide	WEF 1/35	Z5.523.9353.0	100	WEF 1/35	Z5.523.9353.0	100
3. End plate	Color: gray						
	Color: blue						
	Color: green	APC 1-2,5 D1./TK.GRÜN	07.312.5253.7	10	APC 1-2,5 D1./TK.GRÜN	07.312.5253.7	10
4. Partition plate	Color: gray						
	Color: blue						
5. Jumper bar,	2pole						
insulated	3pole						
	4pole						
	5pole						
	6pole						
	7pole						
	8pole						
	9pole						
	10pole						
6. Cover w. warning symbol over 4 blocks		ADC 1 GELB	04.344.0153.8	10	ADC 2,5 GELB	04.344.0353.8	10
7. Test plug		WK 2,5 ST 2/2,3	Z5.553.2921.0	10	WK 2,5 ST 2/2,3	Z5.553.2921.0	10
8. Screw driver, uninsulated		DIN 5264 B 0,6 x 3,5	06.502.4000.0	5	DIN 5264 B 0,6 x 3,5	06.502.4000.0	5
10. Marking accessories		also see page 250/251			9705 A/5/10	04.242.5053.0	25
		* CL I, ZN1, AExe II			* CL I, ZN1, AExe II		
		**CL I, ZN1, Exe II			**CL I, ZN1, Exe II		

IDC duo feed-through blocks, type *WKC*

taris

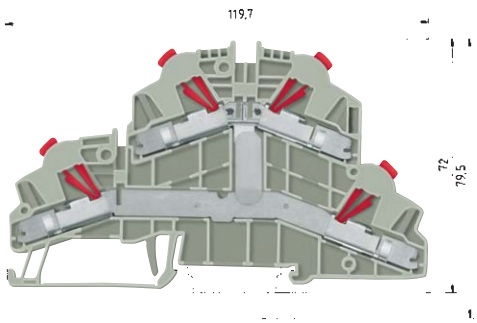

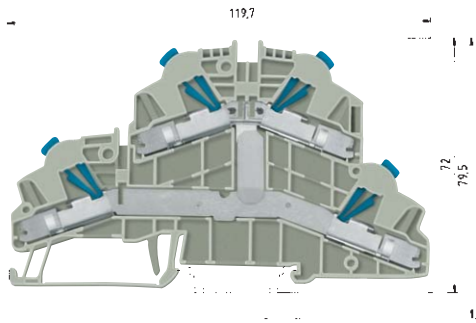

		WKC 1 D2/2/35				WKC 2.5 D2/2/35			
		fine stranded	solid	V	A	fine stranded	solid	V	A
EN 60 947-7-1		0.2 – 1 mm²	0.2 – 1 mm²	500 V/6 kV/3	13.5	1 – 2.5 mm²	1 – 2.5 mm²	500 V/6 kV/3	24
UL ratings		No. 30-18 AWG		600 V	13	No. 18-14 AWG		600 V	22
CSA ratings		No. 24-18 AWG		300/600 V*	13	No. 16-14 AWG		360/600 V*	20
Width	Rated cross section	5 mm			1 mm²	6 mm			2.5 mm²
Approvals		KEMA UL * CSA **				KEMA UL * CSA **			

		Type	Part no.	Std. pack	Type	Part no.	Std. pack
Duo feed-through block	Color: gray	WKC 1 D2/2/35	56.301.5153.0	50	WKC 2,5 D2/2/35	56.303.5153.0	50
Duo feed-through block	Color: blue	WKC 1 D2/2/35 BLAU	56.301.5153.6	50	WKC 2,5 D2/2/35 BLAU	56.303.5153.6	50
Accessories							
1. Mounting rail 35, 7.5 mm high	L = 2 m	35 x 27 x 7,5 EN 60715	98.300.0000.0	1	35 x 27 x 7,5 EN 60715	98.300.0000.0	1
Mounting rail 35, 15 mm high	L = 2 m	35 x 24 x 15 EN 60715	98.360.0000.0	1	35 x 24 x 15 EN 60715	98.360.0000.0	1
2. End clamp for TS 35	8 mm wide	9708/2 S 35	Z5.522.8553.0	100	9708/2 S 35	Z5.522.8553.0	100
End clamp for TS 35, screwless	8 mm wide	WEF 1/35	Z5.523.9353.0	100	WEF 1/35	Z5.523.9353.0	100
3. End plate	Color: gray	APC 1-2,5 D2./E.	07.312.5453.0	10	APC 1-2,5 D2./E.	07.312.5453.0	10
	Color: blue	APC 1-2,5 D2./E. BLAU	07.312.5453.6	10	APC 1-2,5 D2./E. BLAU	07.312.5453.6	10
	Color: green						
4. Partition plate	Color: gray	TWC 1-2,5 D2./E.	07.312.5553.0	10	TWC 1-2,5 D2./E.	07.312.5553.0	10
	Color: blue	TWC 1-2,5 D2./E. BLAU	07.312.5553.6	10	TWC 1-2,5 D2./E. BLAU	07.312.5553.6	10
5. Cross connector,	2pole	IVB WKF 2,5-2	Z7.280.6227.0	10	IVB WKF 4-2	Z7.261.1227.0	10
insulated	3pole	IVB WKF 2,5-3	Z7.280.6327.0	10	IVB WKF 4-3	Z7.261.1327.0	10
	4pole	IVB WKF 2,5-4	Z7.280.6427.0	10	IVB WKF 4-4	Z7.261.1427.0	10
	5pole	IVB WKF 2,5-5	Z7.280.6527.0	10	IVB WKF 4-5	Z7.261.1527.0	10
	6pole	IVB WKF 2,5-6	Z7.280.6627.0	10	IVB WKF 4-6	Z7.261.1627.0	10
	7pole	IVB WKF 2,5-7	Z7.280.6727.0	20	IVB WKF 4-7	Z7.261.1727.0	20
	8pole	IVB WKF 2,5-8	Z7.280.6827.0	20	IVB WKF 4-8	Z7.261.1827.0	20
	9pole	IVB WKF 2,5-9	Z7.280.6927.0	20	IVB WKF 4-9	Z7.261.1927.0	20
	10pole	IVB WKF 2,5-10	Z7.280.7027.0	20	IVB WKF 4-10	Z7.261.2027.0	20
6. Cover w. warning symbol over 4 blocks		ADC 1 GELB	04.344.0153.8	10	ADC 2,5 GELB	04.344.0353.8	10
7. Test plug		WK 2,5 ST 2/2,3	Z5.553.2921.0	10	WK 2,5 ST 2/2,3	Z5.553.2921.0	10
8. Screw driver, uninsulated		DIN 5264 B 0,6 x 3,5	06.502.4000.0	5	DIN 5264 B 0,6 x 3,5	06.502.4000.0	5
		*300 V for use group C			*300 V for use group C		
		600 V for use group D, E			*600 V for use group D, E		
		* CL I, ZN1, AExe II			* CL I, ZN1, AExe II		
Marking accessories also see page 178-179 and 250-251		**CL I, ZN1, Exe II			**CL I, ZN1, Exe II		

IDC duo ground blocks, type *WKC*

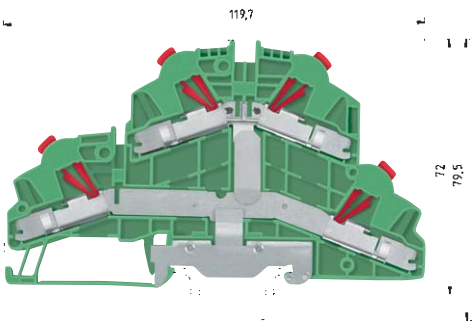

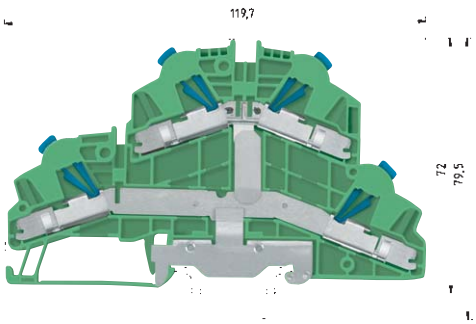

		WKC 1 D2/2/SL/35				WKC 2,5 D2/2/SL/35			
		fine stranded	solid	V	A	fine stranded	solid	V	A
EN 60 947-7-2		0.2 – 1 mm²	0.2 – 1 mm²	500 V/6 kV/3	13.5	1 – 2.5 mm²	1 – 2.5 mm²	500 V/6 kV/3	24
UL ratings		No. 30-18 AWG		600 V		No. 18-14 AWG		600 V	
CSA ratings		No. 24-18 AWG				No. 16-14 AWG			
Width	Rated cross section	5 mm			1 mm²	6 mm			2.5 mm²
Approvals		KEMA KEUR, UL, * CSA, **				KEMA KEUR, UL, * CSA, **			

		Type	Part no.	Std. pack	Type	Part no.	Std. pack
Duo ground block	Color: green/yellow	WKC 1 D2/2/SL/35	56.301.9153.0	50	WKC 2,5 D2/2/SL/35	56.303.9153.0	50
Accessories							
1. Mounting rail 35, 7.5 mm high	L = 2 m	35 x 27 x 7,5 EN 60715	98.300.0000.0	1	35 x 27 x 7,5 EN 60715	98.300.0000.0	1
Mounting rail 35, 15 mm high	L = 2 m	35 x 24 x 15 EN 60715	98.360.0000.0	1	35 x 24 x 15 EN 60715	98.360.0000.0	1
2. End clamp for TS 35	8 mm wide	9708/2 S 35	Z5.522.8553.0	100	9708/2 S 35	Z5.522.8553.0	100
End clamp for TS 35, screwless	8 mm wide	WEF 1/35	Z5.523.9353.0	100	WEF 1/35	Z5.523.9353.0	100
3. End plate	Color: gray						
	Color: blue						
	Color: green	APC 1-2,5 D2./E. GRÜN	07.312.5453.7	10	APC 1-2,5 D2./E. GRÜN	07.312.5453.7	10
4. Partition plate	Color: gray						
	Color: blue						
5. Jumper bar,	2pole						
insulated	3pole						
	4pole						
	5pole						
	6pole						
	7pole						
	8pole						
	9pole						
	10pole						
6. Cover w. warning symbol over 4 blocks		ADC 1 GELB	04.344.0153.8	10	ADC 2,5 GELB	04.344.0353.8	10
7. Test plug		WK 2,5 ST 2/2,3	Z5.553.2921.0	10	WK 2,5 ST 2/2,3	Z5.553.2921.0	10
8. Screw driver, uninsulated		DIN 5264 B 0,6 x 3,5	06.502.4000.0	5	DIN 5264 B 0,6 x 3,5	06.502.4000.0	5
		* CL I, ZN1, AExe II			* CL I, ZN1, AExe II		
		**CL I, ZN1, Exe II			**CL I, ZN1, Exe II		

IDC double-tier blocks, type *WKC*

taris

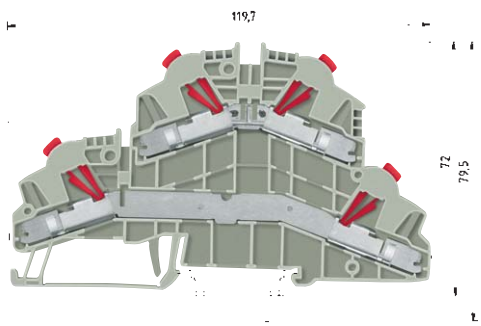

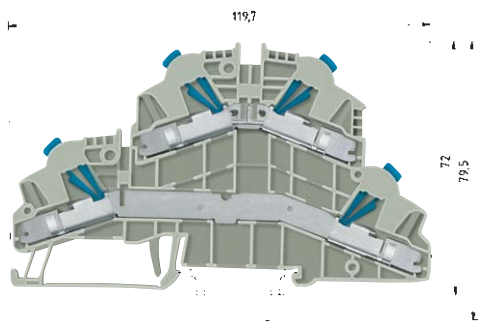

		WKC 1 E/35				WKC 2.5 E/35			
		fine stranded	solid	V	A	fine stranded	solid	V	A
EN 60 947-7-1		0.2 – 1 mm²	0.2 – 1 mm²	500 V/6 kV/3	13.5	1 – 2.5 mm²	1 – 2.5 mm²	500 V/6 kV/3	24
UL ratings		No. 30-18 AWG		600 V	13	No. 18-14 AWG		600 V	22
CSA ratings		No. 24-18 AWG		300/600 V**	13	No. 16-14 AWG		300/600 V**	20
Width	Rated cross section	5 mm			1 mm²	6 mm			2.5 mm²
Approvals		KEMA KEUR, UL, CSA *				KEMA KEUR, UL, CSA *			

		Type	Part no.	Std. pack	Type	Part no.	Std. pack
Double-tier block	Color: gray	WKC 1 E/35	56.301.7053.0	50	WKC 2,5 E/35	56.303.7053.0	50
Double-tier block	Color: blue	WKC 1 E/35	56.301.7053.6		WKC 2,5 E/35	56.303.7053.6	
Accessories							
1. Mounting rail 35, 7.5 mm high	L = 2 m	35 x 27 x 7,5 EN 60715	98.300.0000.0	1	35 x 27 x 7,5 EN 60715	98.300.0000.0	1
Mounting rail 35, 15 mm high	L = 2 m	35 x 24 x 15 EN 60715	98.360.0000.0	1	35 x 24 x 15 EN 60715	98.360.0000.0	1
2. End clamp for TS 35	8 mm wide	9708/2 S 35	Z5.522.8553.0	100	9708/2 S 35	Z5.522.8553.0	100
End clamp for TS 35, screwless	8 mm wide	WEF 1/35	Z5.523.9353.0	100	WEF 1/35	Z5.523.9353.0	100
3. End plate	Color: gray	APC 1-2,5 D2./E.	07.312.5453.0	10	APC 1-2,5 D2./E.	07.312.5453.0	10
	Color: blue	APC 1-2,5 D2./E. BLAU	07.312.5453.6	10	APC 1-2,5 D2./E. BLAU	07.312.5453.6	10
	Color: green						
4. Partition plate	Color: gray	TWC 1-2,5 D2./E.	07.312.5553.0	10	TWC 1-2,5 D2./E.	07.312.5553.0	10
	Color: blue	TWC 1-2,5 D2./E. BLAU	07.312.5553.6	10	TWC 1-2,5 D2./E. BLAU	07.312.5553.6	10
5. Jumper bar,	2pole	IVB WKF 2,5-2	Z7.280.6227.0	10	IVB WKF 4-2	Z7.261.1227.0	10
insulated	3pole	IVB WKF 2,5-3	Z7.280.6327.0	10	IVB WKF 4-3	Z7.261.1327.0	10
	4pole	IVB WKF 2,5-4	Z7.280.6427.0	10	IVB WKF 4-4	Z7.261.1427.0	10
	5pole	IVB WKF 2,5-5	Z7.280.6527.0	10	IVB WKF 4-5	Z7.261.1527.0	10
	6pole	IVB WKF 2,5-6	Z7.280.6627.0	10	IVB WKF 4-6	Z7.261.1627.0	10
	7pole	IVB WKF 2,5-7	Z7.280.6727.0	20	IVB WKF 4-7	Z7.261.1727.0	20
	8pole	IVB WKF 2,5-8	Z7.280.6827.0	20	IVB WKF 4-8	Z7.261.1827.0	20
	9pole	IVB WKF 2,5-9	Z7.280.6927.0	20	IVB WKF 4-9	Z7.261.1927.0	20
	10pole	IVB WKF 2,5-10	Z7.280.7027.0	20	IVB WKF 4-10	Z7.261.2027.0	20
6. Cover w. warning symbol over 4 blocks		ADC 1 GELB	04.344.0153.8	10	ADC 2,5 GELB	04.344.0353.8	10
7. Test plug		WK 2,5 ST 2/2,3	Z5.553.2921.0	10	WK 2,5 ST 2/2,3	Z5.553.2921.0	10
8. Screw driver, uninsulated		DIN 5264 B 0,6 x 3,5	06.502.4000.0	5	DIN 5264 B 0,6 x 3,5	06.502.4000.0	5
		**300 V for use group C			**300 V for use group C		
		600 V for use group D, E			600 V for use group D, E		
		* CL I, ZN1, AExe II			* CL I, ZN1, AExe II		
Marking accessories also see page 178-179 and 250-251		**CL I, ZN1, Exe II			**CL I, ZN1, Exe II		

IDC function blocks, type *WKC*

taris

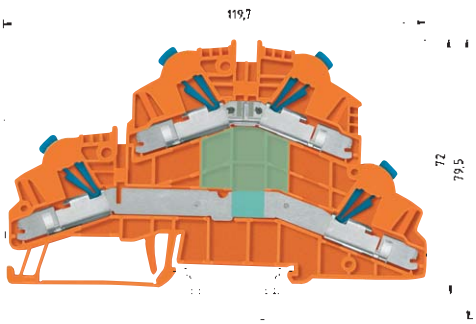

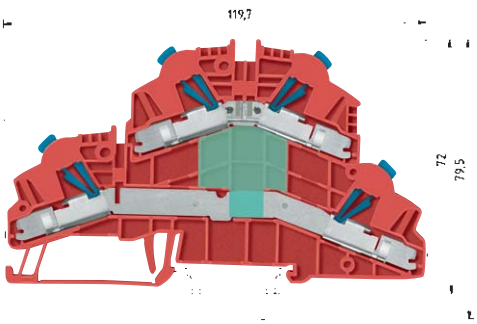

WKC 2,5 E/35...

		fine stranded	solid	V	A
EN 60 947-7-1		1 – 2.5 mm²	1 – 2.5 mm²		
UL ratings		No. 18-14 AWG			
CSA ratings		No. 16-14 AWG			
Width	Rated cross section	6 mm			2.5 mm²
Approvals					

The double-tier block is available upon request as function block for most different connection tasks.

		Type	Part no.	Std. pack
Double-tier block	Color: red	WKC 2,5 E/35...	56.303.xx53.5	
	Color: orange	WKC 2,5 E/35...	56.303.xx53.9	
Accessories				
1. Mounting rail 35, 7.5 mm high	L = 2 m	35 x 27 x 7,5 EN 60715	98.300.0000.0	1
Mounting rail 35, 15 mm high	L = 2 m	35 x 24 x 15 EN 60715	98.360.0000.0	1
2. End clamp for TS 35	8 mm wide	9708/2 S 35	Z5.522.8553.0	100
End clamp for TS 35, screwless	8 mm wide	WEF 1/35	Z5.523.9353.0	100
3. End plate	Color: gray	APC 1-2,5 D2./E.	07.312.5453.0	10
	Color: blue			
	Color: green			
4. Partition plate	Color: gray	TWC 1-2,5 D2./E.	07.312.5553.0	10
	Color: blue	TWC 1-2,5 D2./E. BLAU	07.312.5553.6	10
5. Jumper bar,	2pole	IVB WKF 4-2	Z7.261.1227.0	10
insulated	3pole	IVB WKF 4-3	Z7.261.1327.0	10
	4pole	IVB WKF 4-4	Z7.261.1427.0	10
	5pole	IVB WKF 4-5	Z7.261.1527.0	10
	6pole	IVB WKF 4-6	Z7.261.1627.0	10
	7pole	IVB WKF 4-7	Z7.261.1727.0	20
	8pole	IVB WKF 4-8	Z7.261.1827.0	20
	9pole	IVB WKF 4-9	Z7.261.1927.0	20
	10pole	IVB WKF 4-10	Z7.261.2027.0	20
6. Cover w. warning symbol over 4 blocks		ADC 2,5 GELB	04.344.0353.8	10
7. Test plug		WK 2,5 ST 2/2,3	Z5.553.2921.0	10
8. Screw driver, uninsulated		DIN 5264 B 0,6 x 3,5	06.502.4000.0	5

Examples of functions

56.303.7553.9
56.303.7553.5

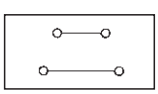

56.303.7153.5
56.303.7153.9

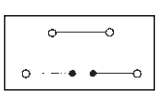

56.303.8053.9

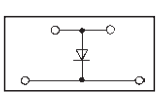

I = 1 A
U = 1000 V

56.303.8253.5

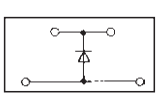

I = 1 A
U = 1000 V

56.303.7953.5

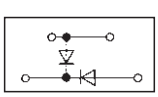

I = 1 A
U = 1000 V

56.303.8353.5

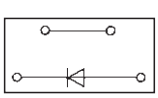

I = 1 A
U = 1000 V

56.303.7453.9
LED rot

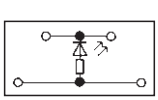

R = 4,7 KΩ
P = 0,5 W
U = 24 V DC

56.303.7253.5
LED rot

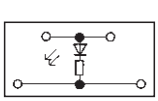

R = 4,7 KΩ
P = 0,5 W
U = 24 V DC

56.303.7353.5

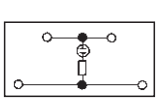

R = 680 KΩ
P = 0,25 W
U = 100-500 V

IDC knife edge disconnect block, type *WKC*

taris

The disconnect knife of the WKC TKM series swings in an out on a pivot. The distinctive color of the disconnect lever signals the open state. The conductor can be terminated with the lever in the open or closed position. Built-in test points are located on both sides of the terminal block.

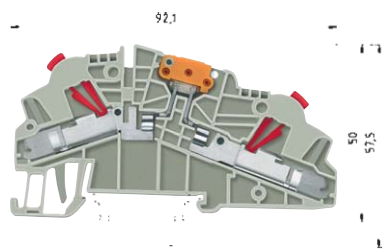

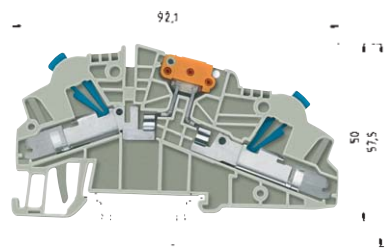

		WKC 1 TKM/35				WKC 2,5 TKM/35			
		fine stranded	solid	V	A	fine stranded	solid	V	A
EN 60 947-7-1		0.2 – 1 mm²	0.2 – 1 mm²	800 V/8 kV/3	13.5	1 – 2.5 mm²	1 – 2.5 mm²	800 V/8 kV/3	20
UL ratings		No. 30-18 AWG		600 V	13	No. 18-14 AWG		600 V	22
CSA ratings		No. 24-18 AWG		300/600 V*	13	No. 16-14 AWG		300/600 V*	20
Width	Rated cross section	6 mm			1 mm²	6 mm			2.5 mm²
Approvals									

		Type	Part no.	Std. pack	Type	Part no.	Std. pack
Knife edge disconnect block	Color: gray	WKC 1 TKM/35	56.301.2053.0	50	WKC 2,5 TKM/35	56.303.2053.0	50
Knife edge disconnect block	Color: blue	WKC 1 TKM/35 BLAU	56.301.2053.6	50	WKC 2,5 TKM/35 BLAU	56.303.2053.6	50
Accessories							
1. Mounting rail 35, 7.5 mm high	L = 2 m	35 x 27 x 7,5 EN 60715	98.300.0000.0	1	35 x 27 x 7,5 EN 60715	98.300.0000.0	1
Mounting rail 35, 15 mm high	L = 2 m	35 x 24 x 15 EN 60715	98.360.0000.0	1	35 x 24 x 15 EN 60715	98.360.0000.0	1
2. End clamp for TS 35	8 mm wide	9708/2 S 35	Z5.522.8553.0	100	9708/2 S 35	Z5.522.8553.0	100
End clamp for TS 35, screwless	8 mm wide	WEF 1/35	Z5.523.9353.0	100	WEF 1/35	Z5.523.9353.0	100
3. End plate	Color: gray	APC 1-2,5 D1./TK.	07.312.5253.0	10	APC 1-2,5 D1./TK.	07.312.5253.0	10
	Color: blue	APC 1-2,5 D1./TK.BLAU	07.312.5253.6	10	APC 1-2,5 D1./TK.BLAU	07.312.5253.6	10
	Color: green						
4. Partition plate	Color: gray	TWC 1-2,5 D1.	07.312.5353.0	10	TWC 1-2,5 D1.	07.312.5353.0	10
	Color: blue	TWC 1-2,5 D1. BLAU	07.312.5353.6	10	TWC 1-2,5 D1. BLAU	07.312.5353.6	10
5. Jumper bar,	2pole	IVB WKF 4-2	Z7.261.1227.0	10	IVB WKF 4-2	Z7.261.1227.0	10
insulated	3pole	IVB WKF 4-3	Z7.261.1327.0	10	IVB WKF 4-3	Z7.261.1327.0	10
	4pole	IVB WKF 4-4	Z7.261.1427.0	10	IVB WKF 4-4	Z7.261.1427.0	10
	5pole	IVB WKF 4-5	Z7.261.1527.0	10	IVB WKF 4-5	Z7.261.1527.0	10
	6pole	IVB WKF 4-6	Z7.261.1627.0	10	IVB WKF 4-6	Z7.261.1627.0	10
	7pole	IVB WKF 4-7	Z7.261.1727.0	20	IVB WKF 4-7	Z7.261.1727.0	20
	8pole	IVB WKF 4-8	Z7.261.1827.0	20	IVB WKF 4-8	Z7.261.1827.0	20
	9pole	IVB WKF 4-9	Z7.261.1927.0	20	IVB WKF 4-9	Z7.261.1927.0	20
	10pole	IVB WKF 4-10	Z7.261.2027.0	20	IVB WKF 4-10	Z7.261.2027.0	20
6. Cover w. warning symbol over 4 blocks		ADC 2,5 GELB	04.344.0353.8	10	ADC 2,5 GELB	04.344.0353.8	10
7. Test plug		WK 2,5 ST 2/2,3	Z5.553.2921.0	10	WK 2,5 ST 2/2,3	Z5.553.2921.0	10
8. Screw driver, uninsulated		DIN 5264 B 0,6 x 3,5	06.502.4000.0	5	DIN 5264 B 0,6 x 3,5	06.502.4000.0	5
		*300 V for use group C			*300 V for use group C		
		*600 V for use group D, E			*600 V for use group D, E		
Marking accessories also see page 178-179 and 250-251							

taris

IDC disconnect block, type *WKC*

taris

Fused plug:

Nominal voltage: 250 V

Nominal current: VDE 0820 T2/IEC 127-2 with a leakage loss of 1.6W.
– 6.3 A for single blocks
– 4 A for blocks directly side by side

Indicator (24 V): red light
Power consumption 10.3 mA

Indicator (220 V): red light
Power consumption: 0.3 mA

*) The power load is determined by the built-in fuse.
The voltage range is determined by the built-in LED.

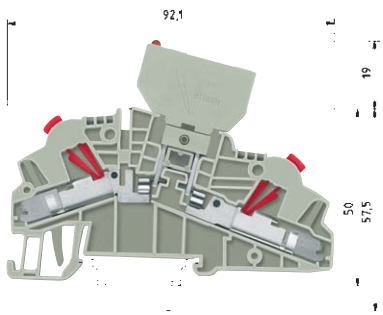

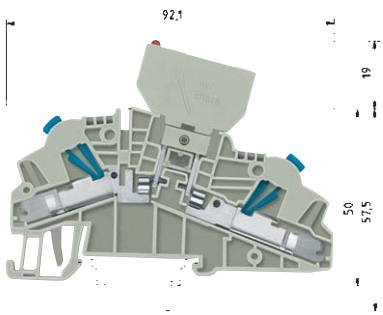

		WKC 1 TKG/35 with fuse holder				WKC 2.5 TKG/35 with fuse holder			
		fine stranded	solid	V	A	fine stranded	solid	V	A
EN 60 947-7-1		0.2 – 1 mm²	0.2 – 1 mm²	800 V/8 kV/3	*	1 – 2.5 mm²	1 – 2.5 mm²	800 V/8 kV/3	*
UL ratings		No. 30-18 AWG		600 V***	6.3***	No. 18-14 AWG		600 V***	6.3***
CSA ratings		No. 24-18 AWG		300 V	6.3	No. 16-14 AWG		300 V	6.3
Width	Rated cross section	6 mm			1 mm²	6 mm			2.5 mm²
Approvals									

		Type	Part no.	Std. pack	Type	Part no.	Std. pack
Disconnect block	Color: gray	WKC 1 TKG/35	56.301.4053.0	50	WKC 2,5 TKG/35	56.303.4053.0	50
Fuse holder for fuse 5 x 20	Color: gray	Si ST	Z1.299.4055.0	10	Si ST	Z1.299.4055.0	10
Fuse holder with indicator (24 V)	Color: gray	Si ST LED	Z1.299.4155.0	10	Si ST LED	Z1.299.4155.0	10
Fuse holder with indicator (220 V)	Color: gray	Si ST GL	Z1.299.4255.0	10	Si ST GL	Z1.299.4255.0	10
Accessories							
1. Mounting rail 35, 7.5 mm high	L = 2 m	35 x 27 x 7,5 EN 60715	98.300.0000.0	1	35 x 27 x 7,5 EN 60715	98.300.0000.0	1
Mounting rail 35, 15 mm high	L = 2 m	35 x 24 x 15 EN 60715	98.360.0000.0	1	35 x 24 x 15 EN 60715	98.360.0000.0	1
2. End clamp for TS 35	8 mm wide	9708/2 S 35	Z5.522.8553.0	100	9708/2 S 35	Z5.522.8553.0	100
End clamp for TS 35, screwless	8 mm wide	WEF 1/35	Z5.523.9353.0	100	WEF 1/35	Z5.523.9353.0	100
3. End plate	Color: gray	APC 1-2,5 D1./TK.	07.312.5253.0	10	APC 1-2,5 D1./TK.	07.312.5253.0	10
	Color: blue						
	Color: green						
4. Partition plate	Color: gray	TWC 1-2,5 D1.	07.312.5353.0	10	TWC 1-2,5 D1.	07.312.5353.0	10
	Color: blue						
5. Jumper bar,	2pole	IVB WKF 4-2	Z7.261.1227.0	10	IVB WKF 4-2	Z7.261.1227.0	10
insulated	3pole	IVB WKF 4-3	Z7.261.1327.0	10	IVB WKF 4-3	Z7.261.1327.0	10
	4pole	IVB WKF 4-4	Z7.261.1427.0	10	IVB WKF 4-4	Z7.261.1427.0	10
	5pole	IVB WKF 4-5	Z7.261.1527.0	10	IVB WKF 4-5	Z7.261.1527.0	10
	6pole	IVB WKF 4-6	Z7.261.1627.0	10	IVB WKF 4-6	Z7.261.1627.0	10
	7pole	IVB WKF 4-7	Z7.261.1727.0	20	IVB WKF 4-7	Z7.261.1727.0	20
	8pole	IVB WKF 4-8	Z7.261.1827.0	20	IVB WKF 4-8	Z7.261.1827.0	20
	9pole	IVB WKF 4-9	Z7.261.1927.0	20	IVB WKF 4-9	Z7.261.1927.0	20
	10pole	IVB WKF 4-10	Z7.261.2027.0	20	IVB WKF 4-10	Z7.261.2027.0	20
6. Cover w. warning symbol over 4 blocks		ADC 2,5 GELB	04.344.0353.8	10	ADC 2,5 GELB	04.344.0353.8	10
7. Test plug		WK 2,5 ST 2/2,3	Z5.553.2921.0	10	WK 2,5 ST 2/2,3	Z5.553.2921.0	10
8. Screw driver, uninsulated		DIN 5264 B 0,6 x 3,5	06.502.4000.0	5	DIN 5264 B 0,6 x 3,5	06.502.4000.0	5
Marking accessories also see page 178-179 and 250-251							

IDC disconnect block, type *WKC*

taris

***) 300 V for use Group C
600 V for use Group B, D per UL 1059
Group D, E per CSA C 22.2

**) The power load is determined by the installed component

Periodic peak voltage 1000 V

Direction of the diode:	Anode	Cathode[1)]
	Cathode	Anode [2)]

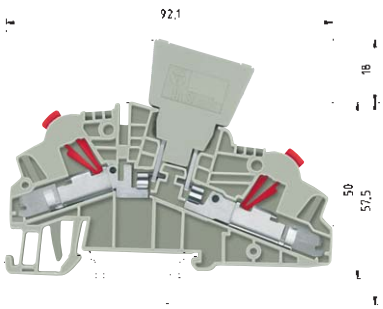

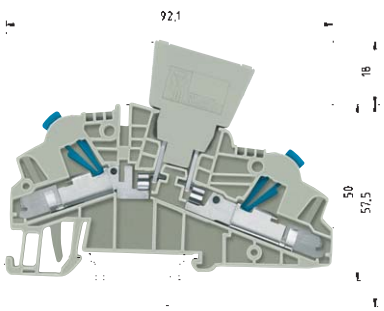

	WKC 1 TKG/35 with diode plug				WKC 2,5 TKG/35 with diode plug			
	fine stranded	solid	V	A	fine stranded	solid	V	A
EN 60 947-7-1	0.2 – 1 mm²	0.2 – 1 mm²	800 V/8 kV/3	**	1 – 2.5 mm²	1 – 2.5 mm²	800 V/8 kV/3	**
UL ratings	No. 30-18 AWG		300/600 V***	**	No. 18-14 AWG		300/600 V***	**
CSA ratings	No. 24-18 AWG		300/600 V	**	No. 16-14 AWG		300/600 V	**
Width	6 mm				6 mm			
Rated cross section				1 mm²				2.5 mm²
Approvals								

			Type	Part no.	Std. pack	Type	Part no.	Std. pack
Disconnect block		Color: gray	WKC 1 TKG/35	56.301.4053.0	50	WKC 2,5 TKG/35	56.303.4053.0	50
Diode plug – empty	J_{max} = 10 A	Color: gray	DIST ...	Z1.299.3053.0		DIST ...	Z1.299.3053.0	
Diode plug – diode	J_{max} = 1 A	Color: gray	DIST-1 N 4007-1[1)]	Z1.299.3155.0	10	DIST-1 N 4007-1[1)]	Z1.299.3155.0	10
Diode plug – diode	J_{max} = 1 A	Color: gray	DIST-1 N 4007-2[2)]	Z1.299.3355.0	10	DIST-1 N 4007-2[2)]	Z1.299.3355.0	10
Diode plug with jumper	J_{max} = 10 A	Color: gray	DIST-D	Z1.299.3255.0	10	DIST-D	Z1.299.3255.0	
Accessories								
1. Mounting rail 35, 7.5 mm high		L = 2 m	35 x 27 x 7,5 EN 60715	98.300.0000.0	1	35 x 27 x 7,5 EN 60715	98.300.0000.0	1
Mounting rail 35, 15 mm high		L = 2 m	35 x 24 x 15 EN 60715	98.360.0000.0	1	35 x 24 x 15 EN 60715	98.360.0000.0	1
2. End clamp for TS 35		8 mm wide	9708/2 S 35	Z5.522.8553.0	100	9708/2 S 35	Z5.522.8553.0	100
End clamp for TS 35, screwless		8 mm wide	WEF 1/35	Z5.523.9353.0	100	WEF 1/35	Z5.523.9353.0	100
3. End plate		Color: gray	APC 1-2,5 D1./TK.	07.312.5253.0	10	APC 1-2,5 D1./TK.	07.312.5253.0	10
		Color: blue						
		Color: green						
4. Partition plate		Color: gray	TWC 1-2,5 D1.	07.312.5353.0	10	TWC 1-2,5 D1.	07.312.5353.0	10
		Color: blue						
5. Jumper bar,		2pole	IVB WKF 4-2	Z7.261.1227.0	10	IVB WKF 4-2	Z7.261.1227.0	10
insulated		3pole	IVB WKF 4-3	Z7.261.1327.0	10	IVB WKF 4-3	Z7.261.1327.0	10
		4pole	IVB WKF 4-4	Z7.261.1427.0	10	IVB WKF 4-4	Z7.261.1427.0	10
		5pole	IVB WKF 4-5	Z7.261.1527.0	10	IVB WKF 4-5	Z7.261.1527.0	10
		6pole	IVB WKF 4-6	Z7.261.1627.0	10	IVB WKF 4-6	Z7.261.1627.0	10
		7pole	IVB WKF 4-7	Z7.261.1727.0	20	IVB WKF 4-7	Z7.261.1727.0	20
		8pole	IVB WKF 4-8	Z7.261.1827.0	20	IVB WKF 4-8	Z7.261.1827.0	20
		9pole	IVB WKF 4-9	Z7.261.1927.0	20	IVB WKF 4-9	Z7.261.1927.0	20
		10pole	IVB WKF 4-10	Z7.261.2027.0	20	IVB WKF 4-10	Z7.261.2027.0	20
6. Cover w. warning symbol over 4 blocks			ADC 2,5 GELB	04.344.0353.8	10	ADC 2,5 GELB	04.344.0353.8	10
7. Test plug			WK 2,5 ST 2/2,3	Z5.553.2921.0	10	WK 2,5 ST 2/2,3	Z5.553.2921.0	10
8. Screw driver, uninsulated			DIN 5264 B 0,6 x 3,5	06.502.4000.0	5	DIN 5264 B 0,6 x 3,5	06.502.4000.0	5

Hybrid DIN rail mount terminal blocks with IDC and screw technology, type *WKC...S/C*

taris HYBRID

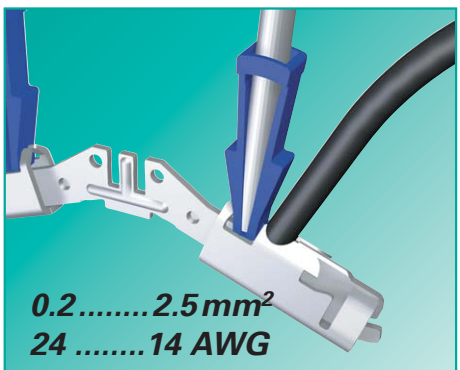

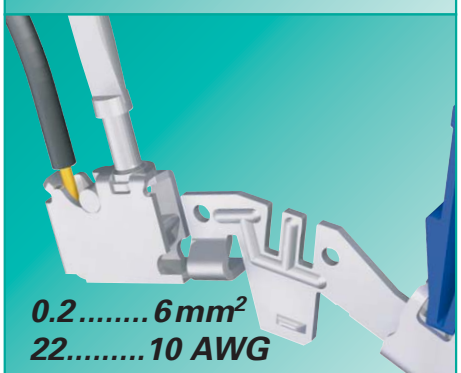

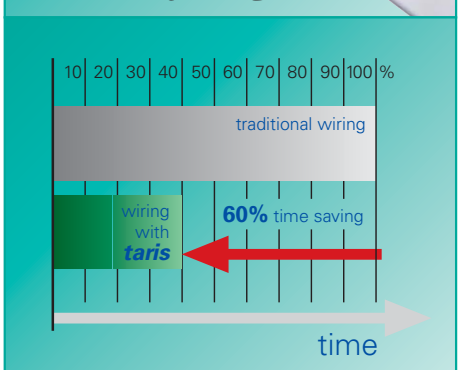

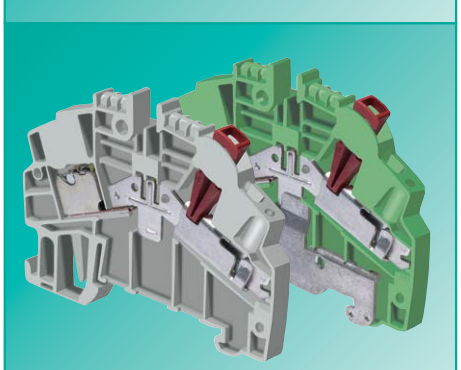

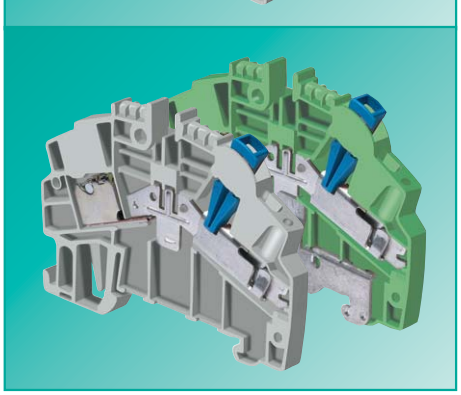

With ***taris*** HYBRID all the benefits of using IDC technology can be realized for factory wiring. While, the field side can be terminated with familiar screw technology.

taris HYBRID offers...

Application advantages.

... for factory wiring

❒ **IDC technology**

easy of use

reduced wiring times

compact design

Screwdriver guide

→ **No special tools required**

→ **No stripping necessary**

→ **Reduces panel space**

→ **Indicates open or closed state of the contact**

... for field wiring

❒ **Screw technology**

TOP entry system

❒ Wide range of Conductor Types

→ **Well known termination technology**

→ **Wire and screwdriver entry in same plane**

→ **Ease of wiring in small confined spaces**
Use of any conductor insulation type

Terminal variations

→ feed through and ground

→ identification in the type description
C = IDC technology
S = screw connection

→ Indication of the position
WKC 1... Red actuator
WKC 2.5... Blue actuator*

WKC 1 S/C..

solid/stranded copper
stranded copper
solid copper
stranded copper with ferrules
torque specification

→ Connecotr and wire gauge

C = 0.2 – 1 mm² / AWG 24-18

S = 0.5 – 2.5 mm² / AWG 22-12
S = 0.5 – 4 mm² / AWG 22-12
S = 0.5 – 2.5 mm² / AWG 22-12

S = 8 lb. - in/0.6 Nm (M2.5)

WKC 2.5 S/C..

solid/stranded copper
stranded copper
solid copper
stranded copper with ferrules
torque specification

→ Connection and wire gauge

C = 1 – 2.5 mm² / AWG 16-14

S = 0.5 – 4 mm² / AWG 22-10
S = 0.5 – 6 mm² / AWG 22-10
S = 0.5 – 4 mm² / AWG 22-10

S = 8 lb. - in/0.7 Nm (M3)

taris

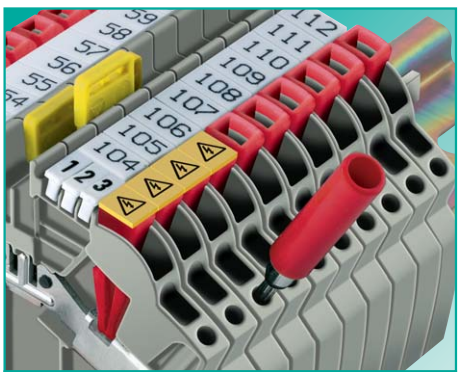

Test plug

- ❒ ***taris*** offers testing for all terminals, without removing any of the wiring
- ❒ Built-in test points at each termination point for use with 2.3 mm diameter test plugs
- ❒ **Modular test plug modules available on pages 176, 177**

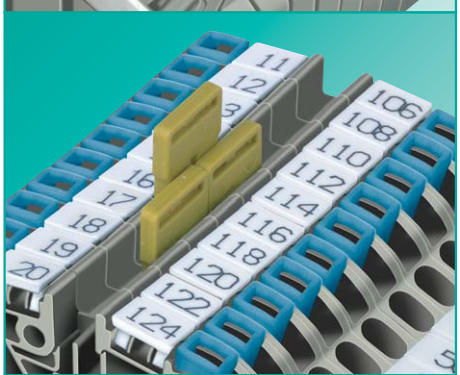

Jumper bars

- ❒ The insulated push-in jumper bars, IVB WKF... are completely touch safe
- ❒ No partition plate is required between jumpered terminals of different potential
- ❒ The IVB WKF... jumper bars are rated for the same current as the terminal block

Marking capability

- ❒ Single marking tags
- ❒ Marking tag strips (10 tags per strip) to rapidly identify the terminals and circuitry
- ❒ Tear-off marking strip for marking up to 3 digits per terminal block
- ❒ Marking facility is down the center so that the marking tag is not covered by the conductor.

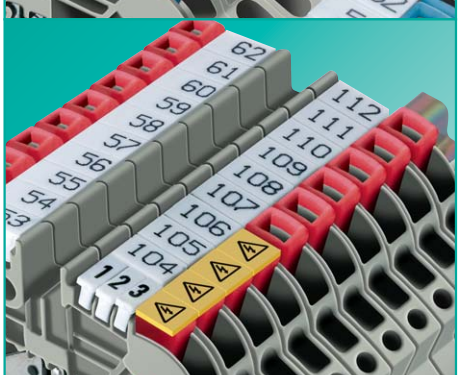

Cover with warning symbol

- ❒ Over with warning symbol **ADC** to snap on to blocks which remain live after the mains have been switch off (VDE 0113)
- ❒ Cover can only be removed with a screwdriver

DQS certificates for all products

- ❒ Quality standard as per DIN ISO 9001 in Development, Production, Assembly
- ❒ Continued control of the quality standard by means of regular internal and external quality audits
- ❒ Compatible with certificates of other countries:
  – BSI Certificate, Great Britain
  – SQS Certificate, Switzerland
  – Aib-Vincotte Certificate, Belgium
  – ÖQS Certificate, Austria

Material

❒ Metal parts:

special alloys and surface treatments provide low contact resistance and high corrosion resistance:

clamping body made of tin-plated copper

current carrying bar made of tin-plated copper

grounding foot - tin-plated copper alloy

❒ Insulating material:

Polyamide has excellent electrical, chemical and mechanical properties

Insulating housings: Polyamide 66/6

Tracking current resistance: CTI 600

Flammability class: UL 94-V0

(also see section ***facts*** & DATA)

Our ***wieplan*** software helps to plan your own terminal block assembly (see page 10/11).

Various German and international approvals are available for feed-through terminal blocks. They are indiscated in detail on the corresponding pages. The feed-through blocks of series WK/WKN are approved for the increased-safety type of protection EEx "e" in accordance to DIN EN 50019 / VDE 0170/0171 part 6 where indicated. No type test is required for the EEx "i" type of protection.

Note

The information regarding cross-sectional areas and connection types pertains to wires without ferrules. Ferrules are not neccessary for secure connection.

The voltage ratings apply to the terminals in their intended application. When different products are mounted adjacent to each other, the proper isolation distances must be adhered to. For this purpose, **Wieland** offers a large selection of appopriate accessories.

A detailed description of technical data, the standards requirements, and the application conditions can be found in catalog section ***facts*** & DATA.

Hybrid feed-through terminals with IDC and screw technology, type *WKC...S/C*

taris HYBRID

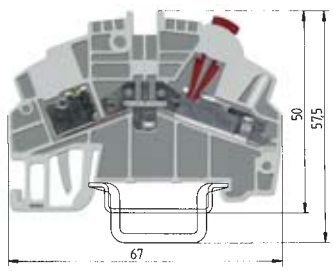

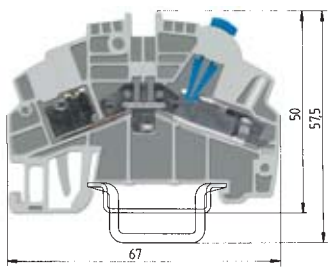

Clamping point **"S"** = screw technology
Clamping point **"C"** = IDC technology

Wire strip length applies to the screw terminal only

		WKC 1 S/C/35				WKC 2.5 S/C/35			
		fine stranded	solid	V	A	fine stranded	solid	V	A
EN 60 947-7-1		0.21 – 1 mm²	0.21 – 1 mm²	800 V/8 kV/3	13.5	1 – 2.5 mm²	1 – 2.5 mm²	800 V/8 kV/3	24
UL ratings		"S" 22-12 AWG / "C" 24-18 AWG 600V			13	"S" 22-10 AWG/ "C" 18-14 AWG 600V			22
CSA ratings		"S" 22-12 AWG/ "C" 24-18 AWG 600V			13	"S" 22-10 AWG/ "C" 16-14 AWG 600V			20
Width	Wire strip length	5 mm			10mm	6 mm			10mm
Approvals		pending				pending			

			Type	Part no.	Std. pack	Type	Part no.	Std. pack
Feed-through terminal		Color: gray	WKC 1 S/C/35	56.351.0053.0		WKC 2,5 S/C/35	56.353.0053.0	
Feed-through terminal		Color: blue	WKC 1 S/C/35 BLAU	56.351.0053.6		WKC 2,5 S/C/35	56.353.0053.6	
Ground terminal		Color: green/yellow						
Accessories								
1. Mounting rail 35, 7.5 mm high		L = 2 m	35 x 27 x 7,5 EN 60715	98.300.0000.0	1	35 x 27 x 7,5 EN 60715	98.300.0000.0	1
Mounting rail 35, 15 mm high		L = 2 m	35 x 24 x 15 EN 60715	98.360.0000.0	1	35 x 24 x 15 EN 60715	98.360.0000.0	1
2. End clamp for TS 35, with screw		8 mm wide	9708/2 S 35	Z5.522.8553.0	100	9708/2 S 35	Z5.522.8553.0	100
End clamp for TS 35, screwless		8 mm wide	WEF 1/35	Z5.523.9353.0	100	WEF 1/35	Z5.523.9353.0	100
3. End plate	1.5 mm wide	Color: gray	APC 1-2,5	07.312.5053.0	10	APC 1-2,5	07.312.5053.0	10
	1.5 mm wide	Color: blue	APC 1-2,5 BLAU	07.312.5053.6	10	APC 1-2,5 BLAU	07.312.5053.6	10
	1.5 mm wide	Color: green						
4. Partition plate	1.5 mm wide	Color: gray	TWC 1-2,5	07.312.5153.0	10	TWC 1-2,5	07.312.5153.0	10
	1.5 mm wide	Color: blue	TWC 1-2,5 BLAU	07.312.5153.6	10	TWC 1-2,5 BLAU	07.312.5153.6	10
5. Jumper bar,		2pole	IVB WKF 2,5-2	Z7.280.6227.0	10	IVB WKF 4-2	Z7.261.1227.0	10
insulated		3pole	IVB WKF 2,5-3	Z7.280.6327.0	10	IVB WKF 4-3	Z7.261.1327.0	10
		4pole	IVB WKF 2,5-4	Z7.280.6427.0	10	IVB WKF 4-4	Z7.261.1427.0	10
		5pole	IVB WKF 2,5-5	Z7.280.6527.0	10	IVB WKF 4-5	Z7.261.1527.0	10
		6pole	IVB WKF 2,5-6	Z7.280.6627.0	10	IVB WKF 4-6	Z7.261.1627.0	10
		7pole	IVB WKF 2,5-7	Z7.280.6727.0	20	IVB WKF 4-7	Z7.261.1727.0	20
		8pole	IVB WKF 2,5-8	Z7.280.6827.0	20	IVB WKF 4-8	Z7.261.1827.0	20
		9pole	IVB WKF 2,5-9	Z7.280.6927.0	20	IVB WKF 4-9	Z7.261.1927.0	20
		10pole	IVB WKF 2,5-10	Z7.280.7027.0	20	IVB WKF 4-10	Z7.261.2027.0	20
6. Cover w. warning symbol over 4 blocks								
		Clamping point **„C"**	ADC 1/4 GELB	04.344.0153.8	10	ADC 2,5 GELB	04.344.0353.8	10
		Clamping point **„S"**	ADF 2,5/4 GELB	04.343.6053.8	10	ADF 4/4 GELB	04.343.6153.8	10
7. Test plug			WK 2,5 ST 2/2,3	Z5.553.2921.0	10	WK 2,5 ST 2/2,3	Z5.553.2921.0	10
8. Screw driver, uninsulated			DIN 5264 B 0,6 x 3,5	06.502.4000.0	5	DIN 5264 B 0,6 x 3,5	06.502.4000.0	5
Screw driver, uninsulated, MINI			DIN 5264 B 0,6 x 3,5 M	06.502.5000.0	10	DIN 5264 B 0,6 x 3,5 M	06.502.5000.0	10
Marking accessories also see page 178-179 and 250-251								

Hybrid ground terminals with IDC and screw technology, type *WKC...S/C*

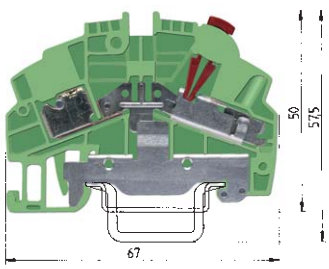

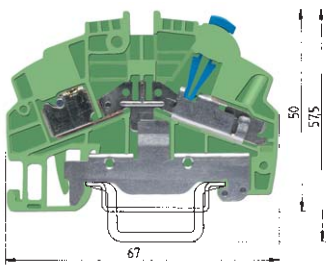

Clamping point **"S"** = screw technology
Clamping point **"C"** = IDC technology

Wire strip length applies to the screw terminal only

		WKC 1 S/C/SL/35				WKC 2.5 S/C/35			
		fine stranded	solid	V	A	fine stranded	solid	V	A
EN 60 947-7-1		0.21 – 1 mm²	0.21 – 1 mm²	800 V/8 kV/3	13.5	1 – 2,5 mm²	1 – 2,5 mm²	800 V/8 kV/3	24
UL ratings		"S" 22-12 AWG/ "C" 24-18 AWG		600V	13	"S" 22-10 AWG/ "C" 18-14 AWG		600V	22
CSA ratings		"S" 22-12 AWG/ "C" 24-18 AWG		600V	13	"S" 22-10 AWG/ "C" 16-14 AWG		600V	20
Width	Wire strip length	5 mm			10mm	6 mm			10mm
Approvals		pending				pending			

			Type	Part no.	Std. pack	Type	Part no.	Std. pack
Feed-through terminal		Color: gray						
Feed-through terminal		Color: blue						
Ground terminal		Color: green/yellow	WKC 1 S/C/SL/35	56.351.9053.0		WKC 2,5 S/C/SL/35	56.353.9053.0	
Accessories								
1. Mounting rail 35, 7.5 mm high		L = 2 m	35 x 27 x 7,5 EN 60715	98.300.0000.0	1	35 x 27 x 7,5 EN 60715	98.300.0000.0	1
Mounting rail 35, 15 mm high		L = 2 m	35 x 24 x 15 EN 60715	98.360.0000.0	1	35 x 24 x 15 EN 60715	98.360.0000.0	1
2. End clamp for TS 35, with screw		8 mm wide	9708/2 S 35	Z5.522.8553.0	100	9708/2 S 35	Z5.522.8553.0	100
End clamp for TS 35, screwless		8 mm wide	WEF 1/35	Z5.523.9353.0	100	WEF 1/35	Z5.523.9353.0	100
3. End plate	1.5 mm wide	Color: gray						
	1.5 mm wide	Color: blue						
	1.5 mm wide	Color: green	APC 1-2,5 GRÜN	07.312.5053.7	10	APC 1-2,5 GRÜN	07.312.5053.7	10
4. Partition plate	1.5 mm wide	Color: gray						
	1.5 mm wide	Color: blue						
5. Jumper bar,		2pole						
insulated		3pole						
		4pole						
		5pole						
		6pole						
		7pole						
		8pole						
		9pole						
		10pole						
6. Cover w. warning symbol over 4 blocks								
		Clamping point **„C"**	ADC 1/4 GELB	04.344.0153.8	10	ADC 2,5 GELB	04.344.0353.8	10
		Clamping point **„S"**	ADF 2,5/4 GELB	04.343.6053.8	10	ADF 4/4 GELB	04.343.6153.8	10
7. Test plug			WK 2,5 ST 2/2,3	Z5.553.2921.0	10	WK 2,5 ST 2/2,3	Z5.553.2921.0	10
8. Screw driver, uninsulated			DIN 5264 B 0,6 x 3,5	06.502.4000.0	5	DIN 5264 B 0,6 x 3,5	06.502.4000.0	5
Screw driver, uninsulated, MINI			DIN 5264 B 0,6 x 3,5 M	06.502.5000.0	10	DIN 5264 B 0,6 x 3,5 M	06.502.5000.0	10

Accessories
DIN rail terminal blocks with IDC connection, type *WKC*

taris

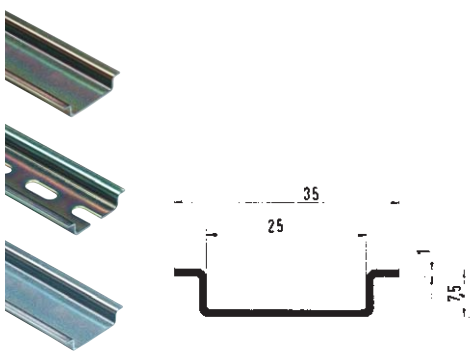

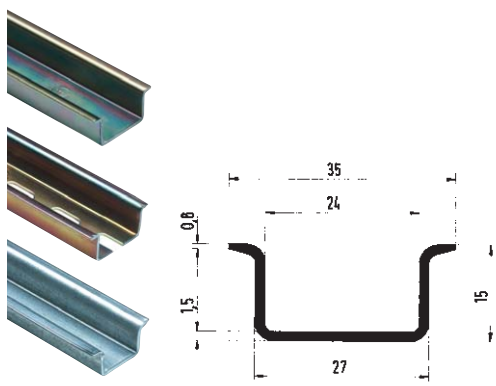

Mounting rail 35 x 7,5
according to DIN EN 60715

Mounting rail 35 x 15
according to DIN EN 60715

	Type	Part no.	Std. pack	Type	Part no.	Std. pack
Mounting rail						
1. Steel, galv. zinc-plated, dichromated, unslotted L = 2 m	35 x 27 x 7,5 EN 60715	98.300.0000.0	1	35 x 27 x 15 EN 60715	98.370.0000.0	1
Steel, galv. zinc-plated, dichromated, slotted L = 2 m	35 x 27 x 7,5 EN 60715 slotted	98.300.1000.0	1	35 x 27 x 15 EN 60715	98.370.1000.0	1
2. Steel, unplated unslotted L = 2 m	35 x 27 x 7,5 EN 60715 unslotted	98.300.0010.0				
Steel, unplated slotted L = 2 m						
3. Steel, high-temp. zinc-plated unslotted L = 2 m						
Steel, high-temp. zinc-plated slotted L = 2 m						
4. E copper unslotted L = 2 m						
E copper slotted L = 2 m						
End clamp						
5. End clamp with screw for 35 mm rail 8 mm wide						
6. End clamp with screw for 35 mm rail						
with marking plate 8/17.5 mm wide						
7. End clamp, screwless, for 35 mm rail 8 mm wide						
8. End clamp, screwless, for 35 mm rail						
with marking plate 8/17,5 mm wide						
for terminal rails						
9. Bus bar holder 8 mm wide						
Busbar support, with screw 8 mm						
10. Clamping screw for mounting rail						
11. Optional label carrier						
12. Paper Markers in perforated sheet form						
(1 sheet = 100 Marking tags)						

taris

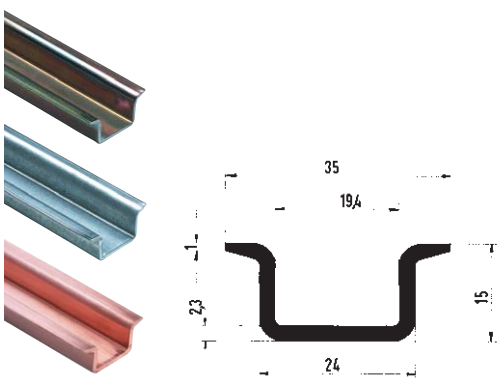

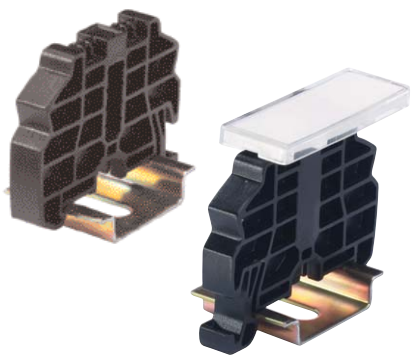

Mounting rail 35 x 15
according to DIN EN 60715

Type	Part no.	Std. pack
35 x 27 x 15 EN 60715	98.360.0000.0	1
35 x 27 x 15 EN 60715 ZN	98.360.0004.0	1
35 x 27 x 15 EN 60715 CU	98.380.0000.0	10

End clamp for TS 35
fastening with screw

Type	Part no.	Std. pack
9708/2 S 35	Z5.522.8553.0	100
9708/2 BS/35	69.920.0553.0	100
	04.019.0289.0	10

End clamp for TS 35
fastening without screw

Type	Part no.	Std. pack
WEF 1/35	Z5.523.9353.0	100
WEF 1 BS/35	69.920.1053.0	100
WKIF SH/E/35	Z1.108.8453.0	10
	69.920.1153.0	
	05.091.0200.0	
BSIR	Z4.243.8453.0	
	04.019.0289.0	10

Marking accessories for IDC DIN rail terminal blocks

taris

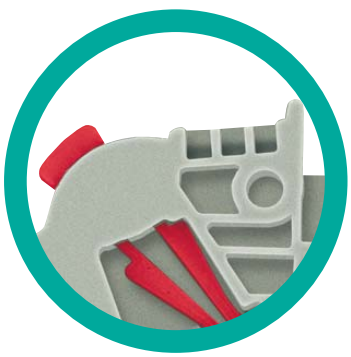

Material:
Polyamide 66/6
Color: black figures on white background

DIN rail terminal blocks with IDC connection, type WKC, accept marking tags on both sides on top of the block in a 3-chamber slot.
It can be either 3 single number tags from the tear-off marking strip , or single tags, or marking strips.

1. **Marking strips**, marked and unmarked, made from Polyamide 66/6, suitable for10 blocks in a row.
   Marking 1-10, 11-20 etc. up to 991-999.
   Type 9705 A/5/10 (5 mm spacing)
   for terminal blocks type WKC 1...
   Type 9705 A/6/10 (6 mm spacing)
   for terminal blocks type WKC 2.5...

2. **Tear-off marking strip** with 10 marking tags made of Polyamide 66/6, white, marked and unmarked.
   This marking system considerably reduces the marking time of terminal block assemblies. For numerical marking of terminal block assemblies you require only 1 1 warehouse positions. As the time used for picking and attaching the tags is reduced, and as stockkeeping is low and the prices extremely favorable, enormous cost savings are the result from using these tear-off marking strips.
   Type 9704 A...
   (see page 180)

3. **Single marking tag** made of Polyamide 66/6, white, marked and unmarked.
   Type 9705 A...

4. **Marking plates** made of Polyamide 66/6 consisting of 11 marking strips.
   Type 9705 A/5/10 (5 mm spacing)
   for terminal blocks type WKC 1...
   Type 9705 A/6/10 (6 mm spacing)
   for terminal blocks type WKC 2.5...

Bezeichnungscomputer im Systemkoffer

Type	Part no.	Std. pack
Marking computer for markingcards		
marcom 2	95.502.0000.0	1
Description		
wieland marcom 2 is a freely programmable marking		
computer for marking tags of DIN rail terminal		
blocks, pluggable connectors, cables and switching		
devices. The program technology with flexible		
menu control produces excellent results requiring		
only few input. Entry of a sequence of figures is		
automatically limited by the parameters of the		
selected marking tags, making wrong print-out		
impossible. Repeated operations can be saved as so-		
called JOBs and are therefore immediately available		
for print-out without further entries. The computer		
disposes of a large number of fonts, with numerical,		
alphanumerical (small/capital letters) and symbolic		
characters.		
marcom 2 is powered by an attached power supply.		
For a mains-independent operation, the **marcom 2**		
Power Pack is available.		
Marking tag plates for **marcom 2**		
9705 A/5/10/11 marcom	Z4.242.5053.0	10
9705 AL/5/10/6 marcom	Z4.242.5153.0	10
9705 A/6/10/11 marcom	Z4.242.6053.0	10
9705 AL/6/10/6 marcom	Z4.242.6353.0	10
9705 A/8/10/7 marcom	Z4.242.8053.0	10

Marking strips and marking plates, marked

1 mm²/5 mm Width

Marking strips, unmarked			
9705 A/5/10		04.242.5053.0	25
Marking strips, marked			
9705 A/5/10 B	1 - 10	04.845.0153.0	25
	11 - 20	04.845.0253.0	25
	21 - 30	04.845.0353.0	25
	31 - 40	04.845.0453.0	25
	41 - 50	04.845.0553.0	25
	51 - 60	04.845.0653.0	25
	61 - 70	04.845.0753.0	25
	71 - 80	04.845.0853.0	25
	81 - 90	04.845.0953.0	25
	91 - 100	04.845.1053.0	25
	⏚ (10 x)	04.855.0053.0	25
	⏚ (10 x)	04.855.0153.0	25
	+ (10 x)	04.855.0253.0	25
	– (10 x)	04.855.0353.0	25
	L1 (10 x)	04.855.0453.0	25
	L2 (10 x)	04.855.0553.0	25
	L3 (10 x)	04.855.0653.0	25
	PE (10 x)	04.855.0753.0	25
	SL (10 x)	04.855.3153.0	25
	N (10 x)	04.855.3253.0	25
	F1 (10 x)	04.855.0953.0	25
	F2 (10 x)	04.855.1053.0	25
L1, L2, L3, N, PE	(2 x)	04.855.0853.0	25
Marking plates, unmarked			
9705 A/5/10/11		Z4.242.5053.0	10
custom marking upon request			

2.5 mm²/6 mm Width

Marking strips, unmarked			
9705 A/6/10		04.242.6053.0	25
Marking strips, marked			
9705 A/6/10 B	1 - 10	04.846.0153.0	25
	11 - 20	04.846.0253.0	25
	21 - 30	04.846.0353.0	25
	31 - 40	04.846.0453.0	25
	41 - 50	04.846.0553.0	25
	51 - 60	04.846.0653.0	25
	61 - 70	04.846.0753.0	25
	71 - 80	04.846.0853.0	25
	81 - 90	04.846.0953.0	25
	91 - 100	04.846.1053.0	25
	⏚ (10 x)	04.856.0053.0	25
	⏚ (10 x)	04.856.0153.0	25
	+ (10 x)	04.856.0253.0	25
	– (10 x)	04.856.0353.0	25
	L1 (10 x)	04.856.0453.0	25
	L2 (10 x)	04.856.0553.0	25
	L3 (10 x)	04.856.0653.0	25
	PE (10 x)	04.856.0753.0	25
	SL (10 x)	04.856.3153.0	25
	N (10 x)	04.856.3253.0	25
	F1 (10 x)	04.856.0953.0	25
	F2 (10 x)	04.856.1053.0	25
L1, L2, L3, N, PE	(2 x)	04.856.0853.0	25
Marking plates, unmarked			
9705 A/6/10/11		Z4.242.6053.0	10
custom marking upon request			

Appliance Terminals

appliance TERMINALS

All Wieland Components which require CE general certification are CE certified, and identified with the CE logo.

Terminal strips

Lighting and appliance terminals

Plug/screw terminal strips
Terminal box
Distribution terminal strips

Mains connectors
for appliance wiring

appliance

CONTENTS

KL 16 PA compact	Page 256
Europa terminal strips	Page 257
• 1.5 mm^2 to 16 mm^2	Page 258
• Male/female terminal strips	Page 258
• Marking accessories	Page 260
1 to 4pole	Page 261
Modular terminals	Page 263
2 to 5pole	Page 264
2 to 12pole	Page 265
Plug/screw KL 17 N	Page 267
KL 58	Page 268
• 6 – 10 mm^2	Page 268
• 3, 5, 6pole	Page 268
• Screw/screw connections	Page 267
• Screw/tab connections	Page 267

Unbreakable terminal strips for narrow spaces

KL 16 PA

Material:

Insulating housing: Polyamide 6 ivory
Hardness test at 125 °C
Glow-wire test with 850 °C
Tracking test PTI 250
Clamping body: nickel-plated brass
Wire protection: phosphor bronze
Clamping screws: steel, zinc-plated and dichromated

These terminal strips are designed for use under extreme conditions accord. to EN 60335-1/ DIN VDE 0700 T1.

Terminals with wire protection DS are fitted with a wire protection guard inside the clamping body, which prevents damage to the connected wire.

The clamping screws are secured against loosening and provide vibration-proof connections.

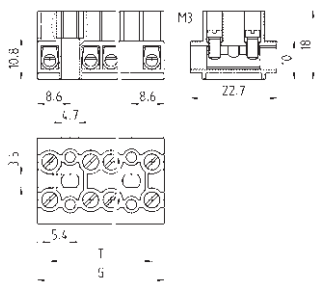

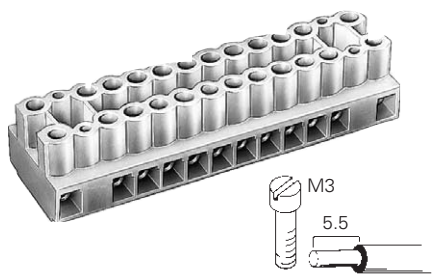

	Type KL 16 PA 2.5 mm² without wire protection	Type KL 16 PA 2.5 mm² with wire protection (DS)
DIN VDE 0110 (fixed position)	500 V/6 kV/3	500 V/6 kV/3
UL ratings	No. 22-12 AWG 250 V 20 A	No. 22-12 AWG 250 V 20 A
CSA ratings	No. 22-12 AWG 300 V 25 A	No. 22-12 AWG 300 V 25 A
EN 60335-1/DIN VDE 0700 T1	AC 400 V; 10 A; 1 – 1.5 mm²/1 – 2.5 mm²	AC 400 V; 10 A; 1 – 1.5 mm²/1 – 2.5 mm²
Approvals		

	Poles	G	T	Type	Part no.	Std. pack	Type	Part no.	Std. pack
	4	33.4	27	KL 16/4 PA	29.400.0453.0	65	KL 16/4 PA DS	29.401.0453.0	65
	6	44.2	37.8	KL 16/6 PA	29.400.0653.0	50	KL 16/6 PA DS	29.401.0653.0	50
	8	55	48.6	KL 16/8 PA	29.400.0853.0	40	KL 16/8 PA DS	29.401.0853.0	40
	12	76.6	70	KL 16/12 PA	29.400.1253.0	30	KL 16/12 PA DS	29.401.1253.0	30
	16	98.2	91.8	KL 16/16 PA	29.400.1653.0	20	KL 16/16 PA DS	29.401.1653.0	20
	20	119.8	113.4	KL 16/20 PA	29.400.2053.0	20	KL 16/20 PA DS	29.401.2053.0	20
Accessories									
Marking plate from white PVC,	4	33.4	27	BZKL 16/4 Z	Z4.102.0480.0	100	BZKL 16/4 Z	Z4.102.0480.0	100
marking surface on both sides	6	44.2	37.8	BZKL 16/6 Z	Z4.102.0680.0	100	BZKL 16/6 Z	Z4.102.0680.0	100
and four plastic pins from	8	55	48.6	BZKL 16/8 Z	Z4.102.0880.0	100	BZKL 16/8 Z	Z4.102.0880.0	100
Polyamide to fasten the marking	12	76.6	70	BZKL 16/12 Z	Z4.102.1280.0	100	BZKL 16/12 Z	Z4.102.1280.0	100
plate	16	98.2	91.8	BZKL 16/16 Z	Z4.102.1680.0	100	BZKL 16/16 Z	Z4.102.1680.0	100
	20	119.8	113.4	BZKL 16/20 Z	Z4.102.2080.0	100	BZKL 16/20 Z	Z4.102.2080.0	100
Fastening pins					05.592.1152.0			05.592.1152.0	
Marked marking plates, 4 to	4			BZKL 16/4 ZB	Z4.802.0480.0	100	BZKL 16/4 ZB	Z4.802.0480.0	100
20pole	to			to	to		to	to	
	20			BZKL 16/20 ZB	Z4.802.2080.0	100	BZKL 16/20 ZB	Z4.802.2080.0	100
Jumper bars of E-Cu									
	2	7.4			07.250.0027.0	10		07.250.0027.0	10
	80	596			07.250.1627.0	10		07.250.1627.0	10

Divisible Europa terminal strips

EUROPA

Material:

Insulating housing: Polyamide 6 ivory Hardness test at 125 °C Glow-wire test with 850 °C Tracking test PTI 250 Clamping body: nickel-plated brass Wire protection: phosphor bronze Clamping screws: steel, zinc-plated and dichromated

Permanent temperature 100 °C
Permanent temperature 130 °C accord. to UL 746 B
Tracking resistance accord. to DIN IEC 112 CTI > 600.

Terminals with wire protection DS are fitted with a wire protection guard inside the clamping body, which prevents damage to the connected wire. All parts are captive in the insulating housing.
The clamping screws are secured against loosening and provide vibration-proof connections. The terminal strips are supplied with the clamping screws in the "open"

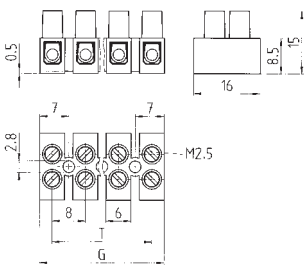

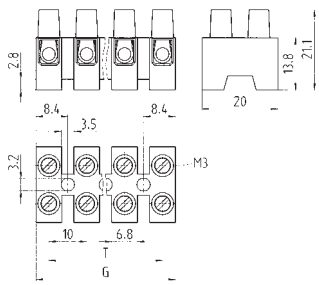

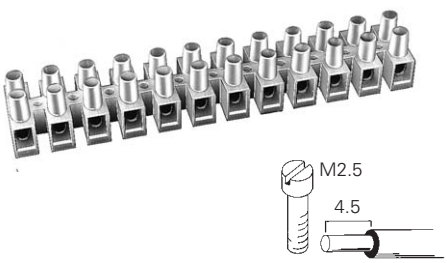

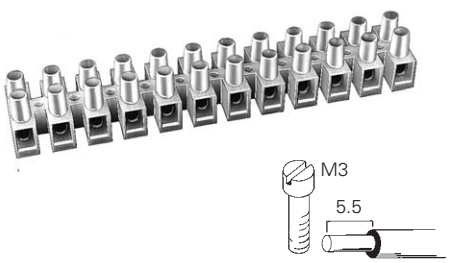

	Type 4 E	1.5 mm²	Type 6 EH	4 mm²
		with DS: 1 mm²		with DS: up to 2.5 mm²/fine-stranded
EN 60998-1/-2-1 (fixed position)	400 V; 17.5 A;	0.75 – 1.5 mm²	690 V; 24 A;	1.0 – 2.5 mm²
Approvals				

	Poles	G	T	Type	Part no.	Std. pack	G	T	Type	Part no.	Std. pack
without wire protection	1	6	–	4 E/ 1	21.304.0153.0	5000	7	–	6 EH/ 1	21.312.0153.0	4000
	2	14	8	4 E/ 2	21.304.0253.0	2000	17	10	6 EH/ 2	21.312.0253.0	1500
	3	22	16	4 E/ 3	21.304.0353.0	2000	27	20	6 EH/ 3	21.312.0353.0	750
	4	30	24	4 E/ 4	21.304.0453.0	2000	37	30	6 EH/ 4	21.312.0453.0	1000
	5	38	32	4 E/ 5	21.304.0553.0	1000	47	40	6 EH/ 5	21.312.0553.0	500
	6	46	40	4 E/ 6	21.304.0653.0	1000	57	50	6 EH/ 6	21.312.0653.0	500
	7	54	48	4 E/ 7	21.304.0753.0	500	67	60	6 EH/ 7	21.312.0753.0	500
	8	62	56	4 E/ 8	21.304.0853.0	500	77	70	6 EH/ 8	21.312.0853.0	250
	9	70	64	4 E/ 9	21.304.0953.0	500	87	80	6 EH/ 9	21.312.0953.0	250
	10	78	72	4 E/10	21.304.1053.0	500	97	90	6 EH/10	21.312.1053.0	250
	11	86	80	4 E/11	21.304.1153.0	500	107	100	6 EH/11	21.312.1153.0	250
	12	94	88	4 E	21.304.1253.0	500	117	110	6 EH	21.312.1253.0	250
with wire protection (DS)	1	6	–	4 E/ 1 DS	21.305.0153.0	5000	7	–	6 EH/ 1 DS	21.313.0153.0	4000
UL ratings: AWG No. 20-14 20 A (4 E); 22-16 10 A (4 E DS); 250 V; 600 V with PVC insulating spacer	2	14	8	4 E/ 2 DS	21.305.0253.0	2000	17	10	6 EH/ 2 DS	21.313.0253.0	1500
	3	22	16	4 E/ 3 DS	21.305.0353.0	2000	27	20	6 EH/ 3 DS	21.313.0353.0	750
	4	30	24	4 E/ 4 DS	21.305.0453.0	2000	37	30	6 EH/ 4 DS	21.313.0453.0	1000
	5	38	32	4 E/ 5 DS	21.305.0553.0	1000	47	40	6 EH/ 5 DS	21.313.0553.0	500
CSA ratings: AWG No. 22-16 10 A (4 E, 4 E DS); 300 V; 600 V with PVC insulating spacer	6	46	40	4 E/ 6 DS	21.305.0653.0	1000	57	50	6 EH/ 6 DS	21.313.0653.0	500
	7	54	48	4 E/ 7 DS	21.305.0753.0	500	67	60	6 EH/ 7 DS	21.313.0753.0	500
	8	62	56	4 E/ 8 DS	21.305.0853.0	500	77	70	6 EH/ 8 DS	21.313.0853.0	250
– with insulating spacer and fastening screws from insulating material 800 V 4E (DS), 6E (DS), 6EH (DS)	9	70	64	4 E/ 9 DS	21.305.0953.0	500	87	80	6 EH/ 9 DS	21.313.0953.0	250
	10	78	72	4 E/10 DS	21.305.1053.0	500	97	90	6 EH/10 DS	21.313.1053.0	250
– 1pole version (without own fastening device) no VDE approval	11	86	80	4 E/11 DS	21.305.1153.0	500	107	100	6 EH/11 DS	21.313.1153.0	250
	12	94	88	4 E DS	21.305.1253.0	500	117	110	6 EH DS	21.313.1253.0	250
Accessories											
Insulating spacer from PVC for higher voltages											
(2 to 12pole available) 2pole											
12pole											
1000 mm long											
					07.469.0280.0	100					
					07.469.1280.0	100					
					07.469.1380.0						

Divisible Europa terminal strips

EUROPA

Material:

Insulating housing: Polyamide 6 ivory
Hardness test at 125 °C
Glow-wire test with 850 °C
Tracking test PTI 250
Clamping body: nickel-plated brass
Wire protection: phosphor bronze
Clamping screws: steel, zinc-plated and dichromated

Permanent temperature 100 °C
Permanent temperature 130 °C accord. to UL 746 B
Tracking resistance accord. to DIN IEC 112 CTI > 600.

Terminals with wire protection DS are fitted with a wire protection guard inside the clamping body, which prevents damage to the connected wire. All parts are captive in the insulating housing. The clamping screws are secured against loosening and provide vibration-proof connections.
The terminal strips are supplied with the clamping screws in the "open" position.

EN 60998-1/-2-1 (fixed position)
EN60335-1/DIN VDE 0700 T1
Approvals

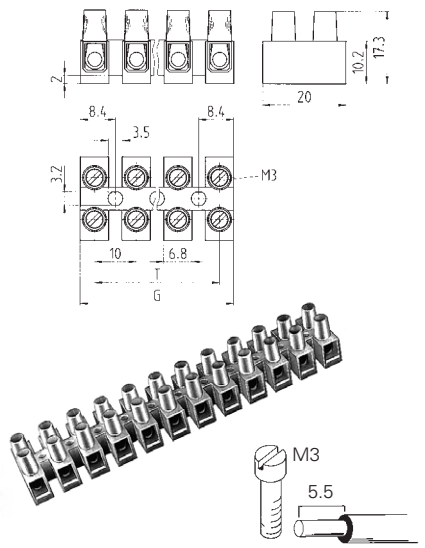

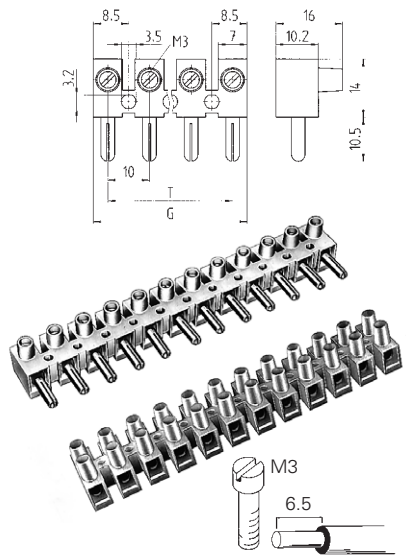

Male terminal strip without wire protection
Type 6 ES

Female terminal strip without wire protection
Type 6 E — 4 mm²

AC 400 V; 10 A; 1 – 1.5 mm²/1 – 2.5 mm²*)

Type 6 E — 4 mm²

with DS: up to 2.5 mm²/fine-stranded
400 V; 24 A; 1.0 – 2.5 mm²

	Poles	G	T	Type	Part no.	Std. pack	G	T	Type	Part no.	Std. pack
without wire protection	1	7	–	6 E/ 1	21.310.0153.0	4000	7	–	6 ES/ 1	22.310.0153.0	100
UL ratings: AWG no. 20-12 20 A (6 E); 22-14 15 A (6 E DS); 22-12 20 A (6 ES, 6 E Female terminal strip); 22-8 40 A (10 E); 22-12 20 A (10 E DS); 22-8 50/65 A (16 E)-field/factory wiring; 22-10 30/40 A (16 E DS)-field/factory wiring; 20-4 70 A (20 E); 22-6 65/75 A (20 E DS)-field/factory wiring; 300 V (600 V with PVC insulating spacer)	2	17	10	6 E/ 2	21.310.0253.0	1500	17	10	6 ES/ 2	22.310.0253.0	100
	3	27	20	6 E/ 3	21.310.0353.0	1500	27	20	6 ES/ 3	22.310.0353.0	100
	4	37	30	6 E/ 4	21.310.0453.0	1000	37	30	6 ES/ 4	22.310.0453.0	100
	5	47	40	6 E/ 5	21.310.0553.0	500	47	40	6 ES/ 5	22.310.0553.0	100
	6	57	50	6 E/ 6	21.310.0653.0	500	57	50	6 ES/ 6	22.310.0653.0	100
	7	67	60	6 E/ 7	21.310.0753.0	50	67	60	6 ES/ 7	22.310.0753.0	50
	8	77	70	6 E/ 8	21.310.0853.0	50	77	70	6 ES/ 8	22.310.0853.0	50
	9	87	80	6 E/ 9	21.310.0953.0	50	87	80	6 ES/ 9	22.310.0953.0	50
	10	97	90	6 E/10	21.310.1053.0	50	97	90	6 ES/10	22.310.1053.0	50
	12	117	110	6 E	21.310.1253.0	250	117	110	6 ES	22.310.1253.0	50
							Female terminal strip without wire protection				
with wire protection (DS)	1	7	–	6 E/ 1 DS	21.311.0153.0	4000	7	–	6 E/ 1	99.261.3521.9	200
CSA ratings: AWG no. 22-14 20 A (6 E, 6 E DS)); 22-14 20 A (6 ES, 6 E Female terminal strip); 22-12 25 A (10 E, 10 E DS); 20-10 40 A (16 E, 16 E DS); 18-8 65 A (20 E, 20 E DS); 300 V (600 V with PVC insulating spacer); – with insulating spacer and fastening screws from insulating material 800 V 6 E (DS); – with insulating spacer and fastening screws from insulating material 1000 V 10 E (DS), 16 E (DS), 20 E (DS); – 1pole version (without own fastening device) no VDE approval; 20 E, 20 EDS: 18-6 AWG, 65 A, 600 V - no spacer required	2	17	10	6 E/ 2 DS	21.311.0253.0	1500	17	10	6 E/ 2	99.262.3521.9	100
	3	27	20	6 E/ 3 DS	21.311.0353.0	1500	27	20	6 E/ 3	99.263.3521.9	100
	4	37	30	6 E/ 4 DS	21.311.0453.0	1000	37	30	6 E/ 4	99.264.3521.9	100
	5	47	40	6 E/ 5 DS	21.311.0553.0	500	47	40	6 E/ 5	99.265.3521.9	500
	6	57	50	6 E/ 6 DS	21.311.0653.0	500	57	50	6 E/ 6	99.266.3521.9	100
	7	67	60	6 E/ 7 DS	21.311.0753.0	50	67	60	6 E/ 7	99.267.3521.9	50
	8	77	70	6 E/ 8 DS	21.311.0853.0	50	77	70	6 E/ 8	99.268.3521.9	50
	9	87	80	6 E/ 9 DS	21.311.0953.0	50	87	80	6 E/ 9	99.269.3521.9	
	10	97	90	6 E/10 DS	21.311.1053.0	50	97	90	6 E/10	99.270.3521.9	50
	12	117	110	6 E DS	21.311.1253.0	250	117	110	6 E	99.272.3521.9	50
Accessories											
Jumper bars E-Cu	2			VB 11/1/2	07.250.0227.0	100					
	3			VB 11/1/3	07.250.0327.0	100					
	6	52.8		VB 11/1/6	07.250.0627.0	50					
	12	112.8		VB 11/1/12	07.250.1027.0	50					
Insulating spacer PVC polycarbonate-yellow											
for higher voltages 1000 mm		1000.0			07.470.1380.0	1					
Wire guard Polycarbonat-yellow	2 –	20.5		LH GE/2	07.470.2256.0	100					
	12	120		LH GE/12	07.470.3256.0	10	*) flexible wire/rigid wire				

europa

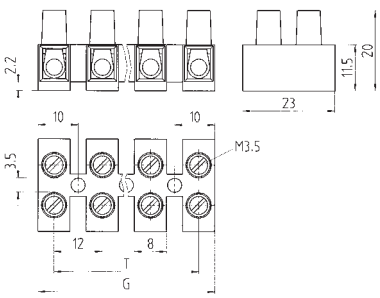

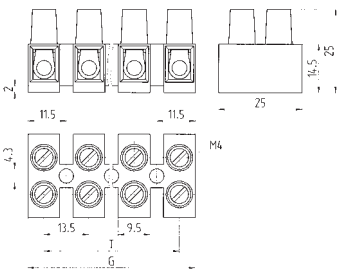

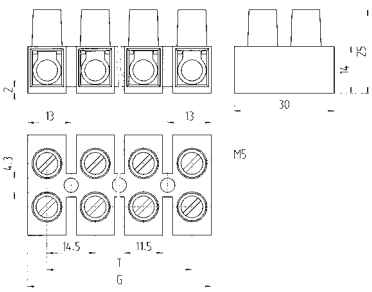

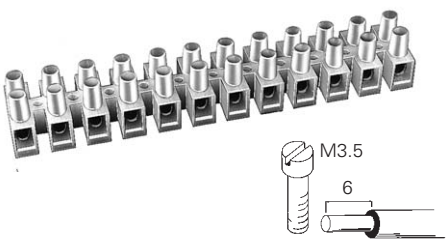

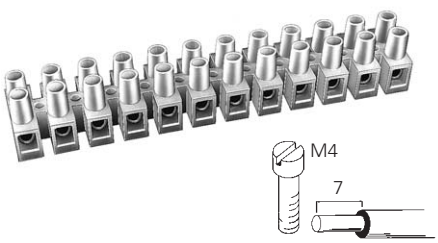

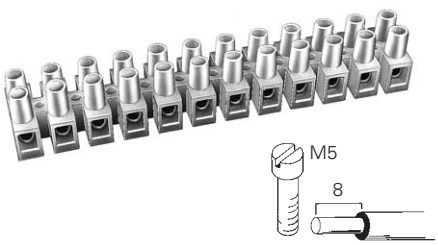

Type 10 E — 6 mm²

with DS: up to 4 mm²/fine-stranded

500 V; 32 A; 1.5 – 4 mm²

G	T	Type	Part no.	Std. pack
8	–	10 E/ 1	21.330.5153.0	2000
20	12	10 E/ 2	21.330.5253.0	1000
32	24	10 E/ 3	21.330.5353.0	500
44	36	10 E/ 4	21.330.5453.0	250
56	48	10 E/ 5	21.330.5553.0	250
68	60	10 E/ 6	21.330.5653.0	250
80	72	10 E/ 7	21.330.5753.0	250
92	84	10 E/ 8	21.330.5853.0	200
104	96	10 E/ 9	21.330.5953.0	200
116	108	10 E/10	21.330.6053.0	200
140	132	10 E	21.330.6253.0	100
8	–	10 E/ 1 DS	21.331.5153.0	2000
20	12	10 E/ 2 DS	21.331.5253.0	1000
32	24	10 E/ 3 DS	21.331.5353.0	500
44	36	10 E/ 4 DS	21.331.5453.0	250
56	48	10 E/ 5 DS	21.331.5553.0	250
68	60	10 E/ 6 DS	21.331.5653.0	250
80	72	10 E/ 7 DS	21.331.5753.0	250
92	84	10 E/ 8 DS	21.331.5853.0	200
104	96	10 E/ 9 DS	21.331.5953.0	200
116	108	10 E/10 DS	21.331.6053.0	200
140	132	10 E DS	21.331.6253.0	100
		30pol. VB 9786 M	07.253.0027.0	10
100			07.471.1380.0	50

Type 16 E — 10 mm²

with DS: up to 6 mm²/fine-stranded

500 V; 41 A; 2.5 – 6 mm²

G	T	Type	Part no.	Std. pack
9.5	–	16 E/ 1	21.340.5153.0	200
23	13.5	16 E/ 2	21.340.5253.0	100
36.5	27	16 E/ 3	21.340.5353.0	50
50	40.5	16 E/ 4	21.340.5453.0	50
63.5	54	16 E/ 5	21.340.5553.0	50
77	67.5	16 E/ 6	21.340.5653.0	50
90.5	81	16 E/ 7	21.340.5753.0	40
104	94.5	16 E/ 8	21.340.5853.0	40
117.5	108	16 E/ 9	21.340.5953.0	20
131	121.5	16 E/10	21.340.6053.0	20
158	148.5	16 E	21.340.6253.0	20
9.5	–	16 E/ 1 DS	21.341.5153.0	200
23	13.5	16 E/ 2 DS	21.341.5253.0	100
36.5	27	16 E/ 3 DS	21.341.5353.0	50
50	40.5	16 E/ 4 DS	21.341.5453.0	50
63.5	54	16 E/ 5 DS	21.341.5553.0	50
77	67.5	16 E/ 6 DS	21.341.5653.0	50
90.5	81	16 E/ 7 DS	21.341.5753.0	40
104	94.5	16 E/ 8 DS	21.341.5853.0	40
117.5	108	16 E/ 9 DS	21.341.5953.0	20
131	121.5	16 E/10 DS	21.341.6053.0	20
158	148.5	16 E DS	21.341.6253.0	20
		VB16 E/2	07.256.8227.0	50
		30pol. VB 16 E/M	07.256.8027.0	10
100			07.472.1380.0	10

Type 20 E — 16 mm²

with DS: up to 10 mm²/fine-stranded

500 V; 57 A; 4.0 – 10 mm²

G	T	Type	Part no.	Std. pack
11.5	–	20 E/ 1	21.340.3153.0	200
26	14.5	20 E/ 2	21.340.3253.0	100
40.5	29	20 E/ 3	21.340.3353.0	50
55	43.5	20 E/ 4	21.340.3453.0	50
69.5	58	20 E/ 5	21.340.3553.0	50
84	72.5	20 E/ 6	21.340.3653.0	50
98.5	87	20 E/ 7	21.340.3753.0	50
113	101.5	20 E/ 8	21.340.3853.0	50
127.5	116	20 E/ 9	21.340.3953.0	20
142	130.5	20 E/10	21.340.4053.0	20
171	159.5	20 E	21.340.4253.0	20
11.5	–	20 E/ 1 DS	21.341.3153.0	200
26	14.5	20 E/ 2 DS	21.341.3253.0	100
40.5	29	20 E/ 3 DS	21.341.3353.0	50
55	43.5	20 E/ 4 DS	21.341.3453.0	50
69.5	58	20 E/ 5 DS	21.341.3553.0	50
84	72.5	20 E/ 6 DS	21.341.3653.0	50
98.5	87	20 E/ 7 DS	21.341.3753.0	50
113	101.5	20 E/ 8 DS	21.341.3853.0	50
127.5	116	20 E/ 9 DS	21.341.3953.0	20
142	130.5	20 E/10 DS	21.341.4053.0	20
171	159.5	20 E DS	21.341.4253.0	20
100			07.473.1380.0*)	10

*) CSA does **not** require for 20 E, 20 EDS, 600 V ratings

Marking accessories for divisible terminal strips

EUROPA

Material:

White, roughened plastic, 0.8 mm thick
Permanent temperature up to 70 °C.

Special plates to mark the terminals of clamping, solder and pluggable terminal strips are available. They can be marked before or after mounting or wiring of the terminals by using special ink Pelikan No. 32 or felt-tip pen "Feinmarker 23" by Faber Castell, or ink pen "Foliograph" by Riepe Werk Hamburg. Or they can be sealed with waterproof stamp color Pelikan type 24.

We can also supply marked plates with normal marking for larger quantities.

Prices upon request:

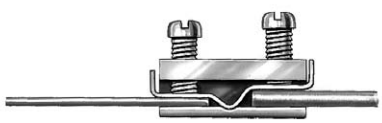

Suitable for types	Poles	Type	Part no.	Std. pack	Suitable for types	Type	Part no.	Std. pack
	2	8130/ 2 BZ	04.033.0080.0	100		10 E/ 2 BZ	04.070.0280.0	100
	3	8130/ 3 BZ	04.033.0180.0	100		10 E/ 3 BZ	04.070.0380.0	100
	4	8130/ 4 BZ	04.033.0280.0	100		10 E/ 4 BZ	04.070.0480.0	100
4 E	5	8130/ 5 BZ	04.033.0380.0	100	10 E	10 E/ 5 BZ	04.070.0580.0	100
	6	8130/ 6 BZ	04.033.0480.0	100		10 E/ 6 BZ	04.070.0680.0	100
	12	8130/12 BZ	04.033.1080.0	100		10 E/12 BZ	04.070.1280.0	100
	1 meter	8130/ MBZ	04.033.1180.0	1		10 E/MBZ	04.070.1380.0	1
	2	8006/ 2 BZ	04.030.0080.0	100		10 E/ 2 DBZ	04.071.0280.0	100
	3	8006/ 3 BZ	04.030.0180.0	100		10 E/ 3 DBZ	04.071.0380.0	100
	4	8006/ 4 BZ	04.030.0280.0	100	10 E	10 E/ 4 DBZ	04.071.0480.0	100
6 E	5	8006/ 5 BZ	04.030.0380.0	100	with marking	10 E/ 5 DBZ	04.071.0580.0	100
	6	8006/ 6 BZ	04.030.0480.0	100	surface on both	10 E/ 6 DBZ	04.071.0680.0	100
	12	8006/12 BZ	04.030.1080.0	100	sides	10 E/12 DBZ	04.071.1280.0	100
	1 meter	8006/MBZ	04.030.1180.0	1		10 E/MDBZ	04.071.1380.0	1
	2	8016/ 2 BZ	04.080.0080.0	100		16 E/ 2 BZ	04.090.0280.0	100
	3	8016/ 3 BZ	04.080.0180.0	100		16 E/ 3 BZ	04.090.0380.0	100
	4	8016/ 4 BZ	04.080.0280.0	100		16 E/ 4 BZ	04.090.0480.0	100
20 E	5	8016/ 5 BZ	04.080.0380.0	100	16 E	16 E/ 5 BZ	04.090.0580.0	100
	6	8016/ 6 BZ	04.080.0480.0	100		16 E/ 6 BZ	04.090.0680.0	100
	12	8016/12 BZ	04.080.1080.0	100		16 E/12 BZ	04.090.1280.0	100
	1 meter	8016/MBZ	04.080.1180.0	1		16 E/MBZ	04.090.1380.0	1

Lighting terminals

appliance TERMINALS

Material:

Insulating parts: glazed porcelain or melamine type 150, tracking resistant
Clamping body: nickel-plated brass;
Wire protection: phosphor bronze;
Clamping screws: steel, zinc-plated and dichromated

Terminals with wire protection DS are fitted with a wire protection guard inside the clamping body, which prevents damage to the connected wire.

Temperature range: -40 ˚C → +150 ˚C

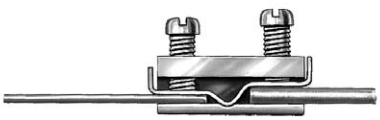

	Poles	mm²	Type	Part no.	Std. pack	L	W	H	Distance Ø, Mount. holesFasten. screws DIN 84
Lighting terminals	1		547	14.100.0170.0	300	22	10	15	
Dimensions in mm	2	2.5	548	14.100.0270.0	200	22	18	15	
	3		549	14.100.0370.0	100	25	22	15	

M3

Insulating part: Glazed porcelain Wire strip length: 6 mm

DIN VDE 0110 (position not fixed)
400 V/2.5 kV/1
250 V/2.5 kV/2

Appliance terminals

appliance TERMINALS

Material:

Insulating parts: glazed porcelain or melamine type 150, tracking resistant
Clamping body: nickel-plated brass;
Wire protection: phosphor bronze;
Clamping screws: steel, zinc-plated and dichromated

Terminals with wire protection DS are fitted with a wire protection guard inside the clamping body, which prevents damage to the connected wire.

Temperature range for porcelain: -40 ˚C → +150 ˚C

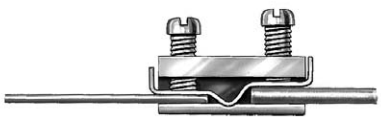

	Poles	mm²	Type	Part no.	Std. pack	L	W	H	Distance	Ø, Mount. holes	Fasten. screws DIN 84
Appliance terminal with mounting hole	2		1032	14.200.0270.0	100	24			–		
Dimensions in mm M3 M3.5	2		1032 DS	14.201.0270.0	100	24			–		
	2		1032 M 3,5	14.200.1270.0	100	38	20	16	13	4.5	M4
						38			13		
Insulating part: Glazed porcelain Wire strip length: 6 mm DIN VDE 0110 (position not fixed) 400 V/4 kV/2	3		1033	14.200.0370.0	50						
	3	2.5	1033 DS	14.201.0370.0	50						
	3		1033 M 3,5	14.200.1370.0	50						
						39			–		
M3 = 10 A M3.5 = 16 A						39			–		
	4		1033 A	14.200.0470.0	50						
	4		1033 A DS	14.201.0470.0	50						
	4		1033 M 3,5	14.200.1470.0	50						
Appliance terminal accord. to DIN 46284	2		2 DIN 46284 ST	14.210.0270.0	100	20			–		
Insulating part: Glazed porcelain Wire strip length: 6 mm DIN VDE 0110 (fixed position) 400 V/6 kV/3	2		2 D DIN 46284 ST	14.211.0270.0	100	20			–		
		2.5				21	18			3.3	M3
	3		3 DIN 46284 ST	14.210.0370.0	100	34			12.5		
	3		3 D DIN 46284 ST	14.211.0370.0	100	34			12.5		
Appliance terminal with mounting hole and base rail	2	2.5	1031	14.220.0270.0	100	24	25	18	–	4.5	M4
	3	2.5	1029	14.220.0370.0	50	36			13		
	2	6	1027	14.230.0270.0	30	36	36	28	–	5.8	M5
M3 (2.5 mm²) M5 (6 mm²)											
Insulating part: Glazed porcelain Wire strip length: 6 mm DIN VDE 0110 (position not fixed) 400 V/6 kV/3											
Appliance terminal 4pole	4	2.5	1033 A P KR	14.290.0440.0	100	40	20	18.5	–	5.3	M5
	4	2.5	1033 A P DS KR	14.291.0440.0	100						
M3											
Insulating part: melamine type 150, tracking resistant Wire strip length: 6 mm DIN VDE 0110 (fixed position) 400 V/6 kV/3											

Modular terminals for mounting rail 10 x 2.5 mm

appliance

with insulating housing from unglazed steatite

	DIN VDE 0110	Wire strip length	Type	Part no.	Std. pack	L	B	mm² solid/stranded/fine-stranded		with ferrule	Cl.screw
Modular terminal without wire protection	250 V/4 kV/3	7	1038 A	30.400.0675.0	125	19	8.5 ± 0.3	6	4	2.5	M3
Dimensions in mm	250 V/4 kV/3	10	1038 B	30.400.1075.0	100	24	12.5 ± 0.35	10	10	6	M4
	400 V/6 kV/3	10	1038 C	30.400.1675.0	75	28	15 ± 0.4	16	10	10	M5
Modular terminal with wire protection	250 V/4 kV/3	6	1038 A DS	30.401.0475.0	125	19	8.5 ± 0.3	4	4	1.5	M3
	250 V/4 kV/3	7	1038 B DS	30.401.0675.0	100	24	12.5 ± 0.35	6	6	2.5	M4
	400 V/6 kV/3	7	1038 C DS	30.401.1075.0	75	28	15 ± 0.4	10	10	4	M5
Accessories											
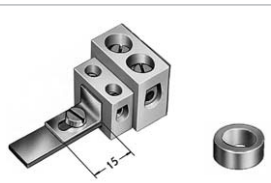											
Mounting rail: steel, galv. zinc-plated, L = 1 m			1039 M	98.060.0000.0	50						
10 x 2.5 mm											
End bracket			1039 W	05.522.0725.0	250						
Distance ring: outside Ø 7, inside Ø 4.5			1036 R	05.590.3121.0	500						

Plug/screw terminal strips

KL 20 PA

Material:

Insulating housing: Polyamide 6.6, tracking resistant

Clamping body with tab connector:
- nickel-plated brass – for KL 20 and KL 30 –
- for KL 24 tin-plated steel

Wire protection: phosphor bronze, nickel-plated Clamping screws: steel, zinc-plated and dichromated

Insulating part:

Hardness test	at 125 °C
Glow-wire test	with 850 °C
Tracking test	PTI 600

Temperature range: -40 ˚C → +100 ˚C

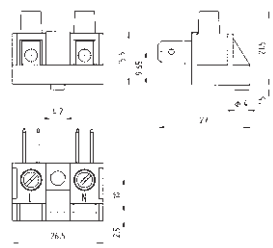

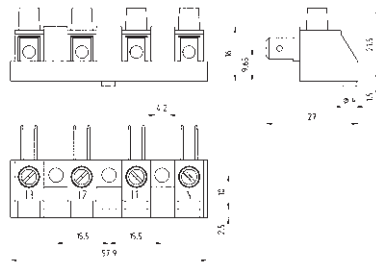

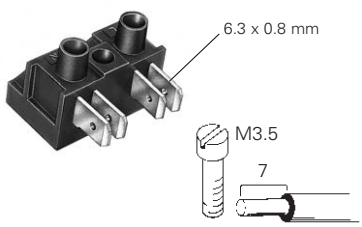

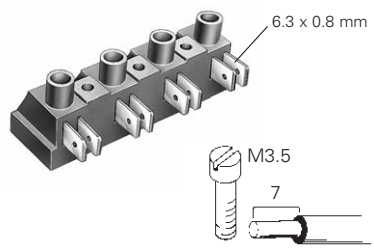

	Type KL 20/2 PA	2pole	Type KL 20/4 PA	4pole
EN 60998-1/-2-1; EN 61210; (fixed position)	AC 400 V; */** A;	***/2 x (6.3 x 0.8 mm)	AC 400 V; */** A;	***/2 x (6.3 x 0.8 mm)
UL-ratings				
CSA ratings	300 V; 16 A;	No. 22 – 14 AWG	300 V; 16 A;	No. 22 – 14 AWG
Approvals				

	Poles	Type	Part no.	Std. pack	Type	Part no.	Std. pack
without wire protection	2	KL 20/2 PA	29.500.0253.0	750			
	3						
	4				KL 20/4 PA	29.500.0353.0	50
with wire protection (DS)							
	2	KL 20/2 DS PA	29.500.1253.0	750			
	3						
	4				KL 20/4 DS PA	29.500.1353.0	50
	5						

* 24 A screw clamp terminal with 2.5 mm² conductor

** 12 A tab connector with 2.5 mm² conductor

*** 1 – 2.5 mm² rigid/flexible
1 – 4 mm² rigid

CCA/DE

KL 20

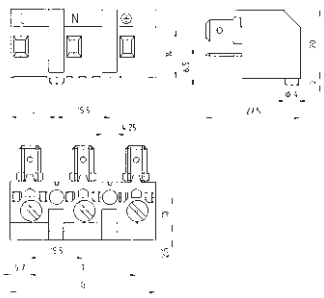

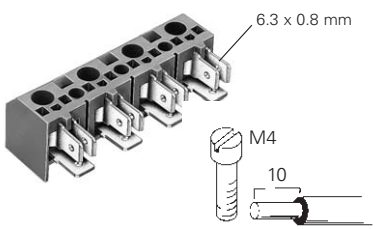

Type KL 24 — 2 to 5pole

AC 400 V; */** A; ***/3 x (6.3 x 0.8 mm)
300 V; 16 A; No. 22 – 12 AWG
300 V; 20 A; No. 22 – 14 AWG

Type	Part no.	Std. pack
KL 24/2	29.500.9253.0	1000
KL 24/3	29.500.9353.0	500
KL 24/4	29.500.9453.0	500
KL 24/5	29.500.9553.0	250

Pole designation
2pole = L, N,
3pole = L, N, ⏚
5pole = L3, L2, L1, N, ⏚

Dimensions

Poles	T	G
2	15.5	27
3	31	42.5
4	46.5	58
5	62	73.5

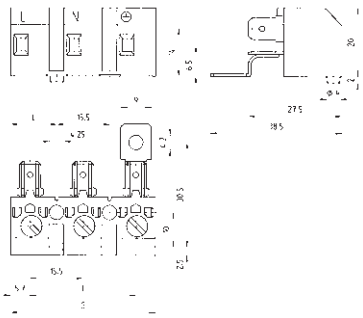

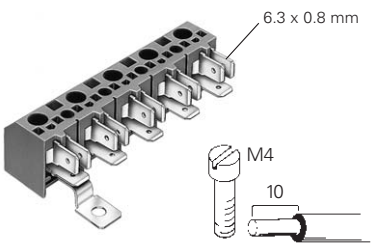

Type KL 24 SL — 3, 5pole

AC 400 V; */** A; ***/3 x (6.3 x 0.8 mm)
300 V; 20 A; No. 22 – 14 AWG

Type	Part no.	Std. pack
KL 24/3 SL	29.502.9353.0	500
KL 24/5 SL	29.502.9553.0	250

Pole designation
3pole = L, N, ⏚
5pole = L3, L2, L1, N, ⏚

Dimensions

Poles	T	G
3	31	42.5
5	62	73.5

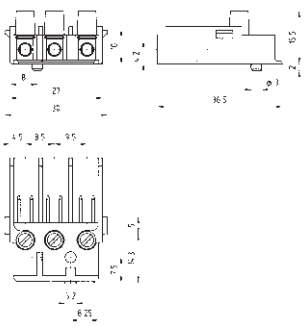

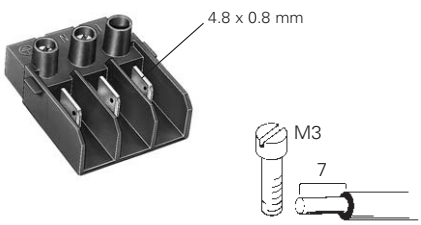

Type KL 30/3 PA — 3pole

AC 400 V; */** A; ***/2 x (4.8 x 0.8 mm)
150 V; 10 A; No. 22 – 12 AWG
150 V; 10 A; No. 22 – 14 AWG

Type	Part no.	Std. pack
KL 30/3 PA	29.500.3053.0	500
KL 30/3 DS PA	29.500.4053.0	500

Terminal box KBD

Material:

Insulating part: melamine type 150, tracking resistant
Clamping body and cover fastening screws: nickel-plated brass
Clamping screws: steel, zinc-plated and dichromated
Wire protection: phosphor bronze

T = (Number of poles -1) x 12
G = T + 30

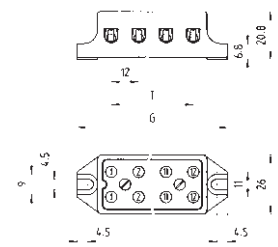

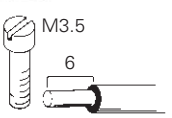

with DS up to 2.5 mm²/fine-stranded

EN 60998-1/-2-1		500 V; 32 A;
Rated cross section	solid	4 mm²
Rated cross section	fine stranded	2.5 mm²
Approvals		

	Poles	G	Type	Part no.	Std. pack
with female terminals and	2	42	KBD 1/ 2 KR	28.121.0240.0	50
wire protection	3	54	KBD 1/ 3 KR	28.121.0340.0	40
	4	66	KBD 1/ 4 KR	28.121.0440.0	30
	5	78	KBD 1/ 5 KR	28.121.0540.0	25
	6	90	KBD 1/ 6 KR	28.121.0640.0	20
	7	102	KBD 1/ 7 KR	28.121.0740.0	
	8	114	KBD 1/ 8 KR	28.121.0840.0	20
	10	138	KBD 1/10 KR	28.121.1040.0	15
	12	162	KBD 1/12 KR	28.121.1240.0	15

Distribution terminal strips for plug and screw connections

KL 17 N

Material:

Insulating part: Polyamid 66 ivory
Permanent temperature 100 °C
Permanent temperature 125 °C accord. to UL 746 B
(All indicated temperatures include the power load caused by the operation)

Tracking resistance accord. to DIN IEC 112. CTI > 600
Hardness test at 125 °C
Glow-wire test with 850 °C
Tracking test PTI 600

– with insulating spacer 400 V

** 24 A screw clamp terminal with 2.5 mm² conductor
12 A tab connector with 1.5 mm² conductor

CSA: 300 A, 20 A, 22 – 12 AWG

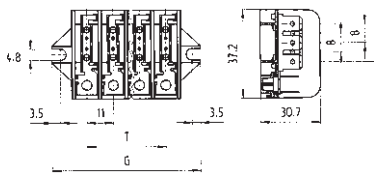

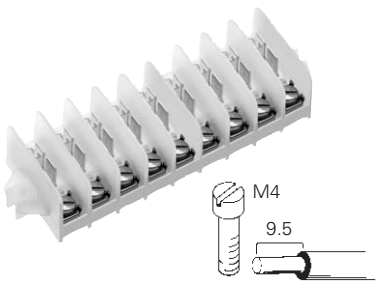

EN 60998-1/-2-1; EN 61210 (fixed position)

Distribution terminal strip for plug connections
Type KL 17 N/*.../
* indicate the number of poles, e.g. KL 17 N/5/
AC 230/400 V/2; **A;
1 – 2.5 mm²/5x (6.3 x 0.8 mm)

Distribution terminal strip for plug and screw connections
Type KL 17 N/*.../K
* indicate the number of poles, e.g. KL 17 N/5/K
AC 230/400 V/2; **A;
1 – 2.5 mm²/5x (6.3 x 0.8 mm)
with clamping spring and screw M4 x 8 DIN 85

	Poles	G	Type	Part no.	Std. pack	Type	Part no.	Std. pack
5 tab connectors 6.3 x 0.8 mm	1	29.8		29.608.0153.0	120		29.608.3153.0	120
tin-plated steel	2	40.8		29.608.0253.0	80		29.608.3253.0	80
	3	51.8		29.608.0353.0	60		29.608.3353.0	60
	4	62.8		29.608.0453.0	40		29.608.3453.0	40
	5	73.8		29.608.0553.0	40		29.608.3553.0	40
	6	84.8		29.608.0653.0	30		29.608.3653.0	30
	7	95.8		29.608.0753.0	30		29.608.3753.0	30
	8	106.8		29.608.0853.0	20		29.608.3853.0	20
	9	117.8		29.608.0953.0	20		29.608.3953.0	20
	10	128.8		29.608.1053.0	20		29.608.4053.0	20
	11	139.8		29.608.1153.0	20		29.608.4153.0	20
	12	150.8		29.608.1253.0	20		29.608.4253.0	20
	13	161.8		29.608.1353.0	10		29.608.4353.0	10
	14	172.8		29.608.1453.0	10		29.608.4453.0	10
	15	183.8		29.608.1553.0	10		29.608.4553.0	10
	16	194.8		29.608.1653.0	10		29.608.4653.0	10
	17	205.8		29.608.1753.0	10		29.608.4753.0	
	18	216.8		29.608.1853.0	10		29.608.4853.0	10
	19	227.8		29.608.1953.0	10		29.608.4953.0	
	20	238.8		29.608.2053.0	10		29.608.5053.0	10
	21	249.8		29.608.2153.0	10		29.608.5153.0	
Accessories	22	260.8		29.608.2253.0	10		29.608.5253.0	
Insulating spacer: cardboard 2061,	23	271.8		29.608.2353.0	10		29.608.5353.0	
1 to	24	282.8		29.608.2453.0	10		29.608.5453.0	10
24pole								
Marking plate: PVC								
1 to								
24pole								
				07.450.0187.0			07.450.0187.0	
				07.450.2487.0			07.450.2487.0	
				07.451.0180.0			07.451.0180.0	
				07.451.2480.0	100		07.451.2480.0	100

Mains connectors for appliance wiring 3, 5 and 6pole with screw connection

KL 58 1/5A

Material:

Insulating housing: Polyamide, fiberglass reinforced
Clamping body: tin-plated steel
Clamping screws and clamping spring: zinc-plated steel
Switchable connecting link E-Cu

Ambient temperature:
T 160 ... – 5 °C
Continuous maximum temperature: 125 °C

Insulating part:

Hardness test	at 210 °C
Glow-wire test	with 850 °C
Tracking test	PTI 400

Air and creepage distances accord. to DIN EN 60335-1/VDE 0700 part 1

VDE with Statement of Conformity

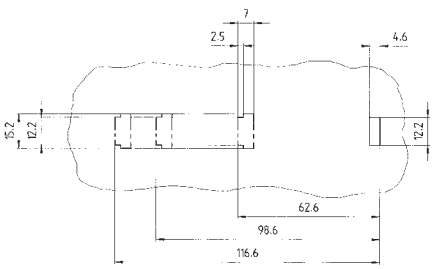

Cut-out 3, 5, 6pole for
*) "latching foot versions"
Metal sheet 1.5 mm thick

EN 60998-1/-2-1; EN 61210; (fixed position)		AC 400 V; 41 A;	1.5 – 6 mm²
UL-ratings	field/factory wiring	250 V; 40 A;	No. 8 - 14/10 AWG
CSA ratings		300 V Gr.B/150 V Gr.C; 40 A;	No. 8/10 AWG
Approvals			

Poles	Type	Part no.	Std. pack
3	KL 58/3/1	29.130.1353.0	200
5	KL 58/5/1	29.130.1553.0	100
	3 links used as a bridge between poles 3 and 4		
6	KL 58/6/1	29.130.1653.0	100
	3 links used as a bridge between poles 4 and 5		
3	KL 58/3 R/1*	29.130.2353.0	200
5	KL 58/5 R/1*	29.130.2553.0	100
	3 links used as a bridge between poles 3 and 4		
6	KL 58/6 R/1*	29.130.2653.0	100
	3 links used as a bridge between poles 4 and 5		

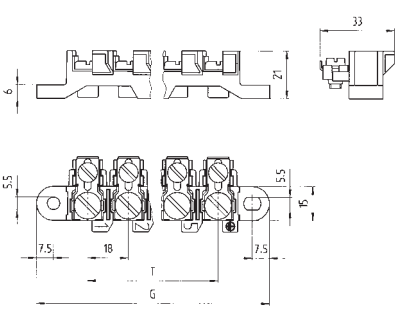

	T (mm)	G
3pole	36	81
5pole	72	117
6pole	90	135

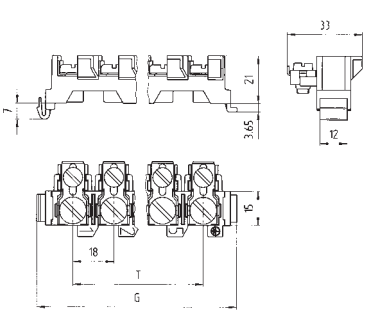

	T (mm)	G
3pole	36	66.5
5pole	72	102.5
6pole	90	120.5

Mains connectors for appliance wiring
3, 5 and 6pole with 3 tab connectors 6.3 x 0.8 mm per pole

KL 58

Material:

Insulating housing: Polyamide, fiberglass reinforced
Clamping body: nickel-plated steel
Clamping screws and clamping spring: zinc-plated steel
Switchable connecting link E-Cu

Ambient temperature:
T 160 ... – 5 °C
Continuous maximum temperature: 125 °C

Insulating part:

Hardness test	at 210 °C
Glow-wire test	with 850 °C
Tracking test	PTI 400

Air and creepage distances accord. to DIN EN 60335-1/VDE 0700 part 1

* 41 A Screw terminal with 6 mm² conductor
** 20 A Tab connector with 6 mm² conductor
VDE with Statement of Conformity

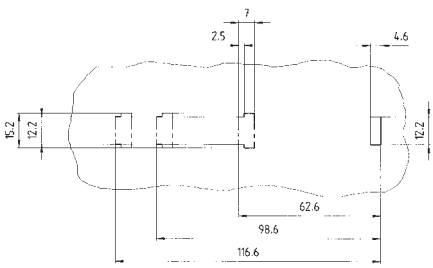

Cut-out 3, 5, 6pole for
*) "latching foot versions"
Metal sheet 1.5 mm thick

(mains side) **10 mm²**

EN 60998-1/-2-1; EN 61210; (fixed position)
UL-ratings field/factory wiring
CSA ratings
Approvals

AC 400 V; */** A; 1.5 – 6 mm²/3x (6.3 x 0.8 mm)
250 V; 40 A; No. 8 - 14/10 AWG
300 V Gr.B/150 V Gr.C; 40 A; No. 8/10 AWG

Note:
The air distance of 9.5 mm between the terminals and the mounting base must be guaranteed.

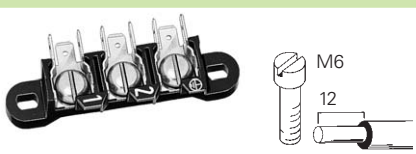

Poles	Type	Part no.	Std. pack
3	KL 58/3 S/1	29.131.1353.0	200

Poles	Type	Part no.	Std. pack
5	KL 58/5 S/1	29.131.1553.0	100
	3 links used as a bridge between poles 3 and 4		

Poles	Type	Part no.	Std. pack
6	KL 58 S/6 S/1	29.131.1653.0	100
	3 links used as a bridge between poles 4 and 5		

Poles	Type	Part no.	Std. pack
3	KL 58/3 S R/1*	29.131.2353.0	200

Poles	Type	Part no.	Std. pack
5	KL 58/5 S R/1*	29.131.2553.0	100
	3 links used as a bridge between poles 3 and 4		

Poles	Type	Part no.	Std. pack
6	KL 58/6 S R/1*	29.131.2653.0	100
	3 links used as a bridge between poles 4 and 5		

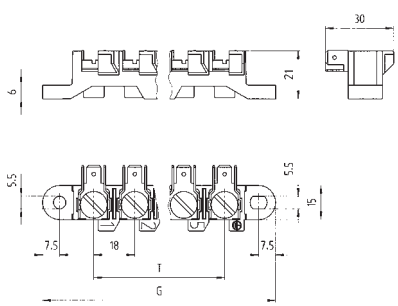

	T (mm)	G
3pole	36	81
5pole	72	117
6pole	90	135

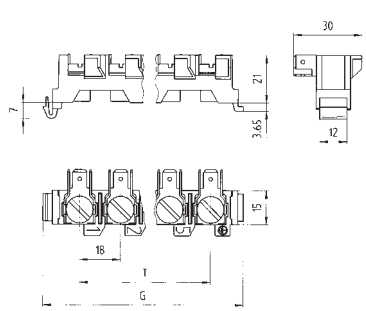

	T (mm)	G
3pole	36	66.5
5pole	72	102.5
6pole	90	120.5

Special versions with ground connection to the mounting base: upon request

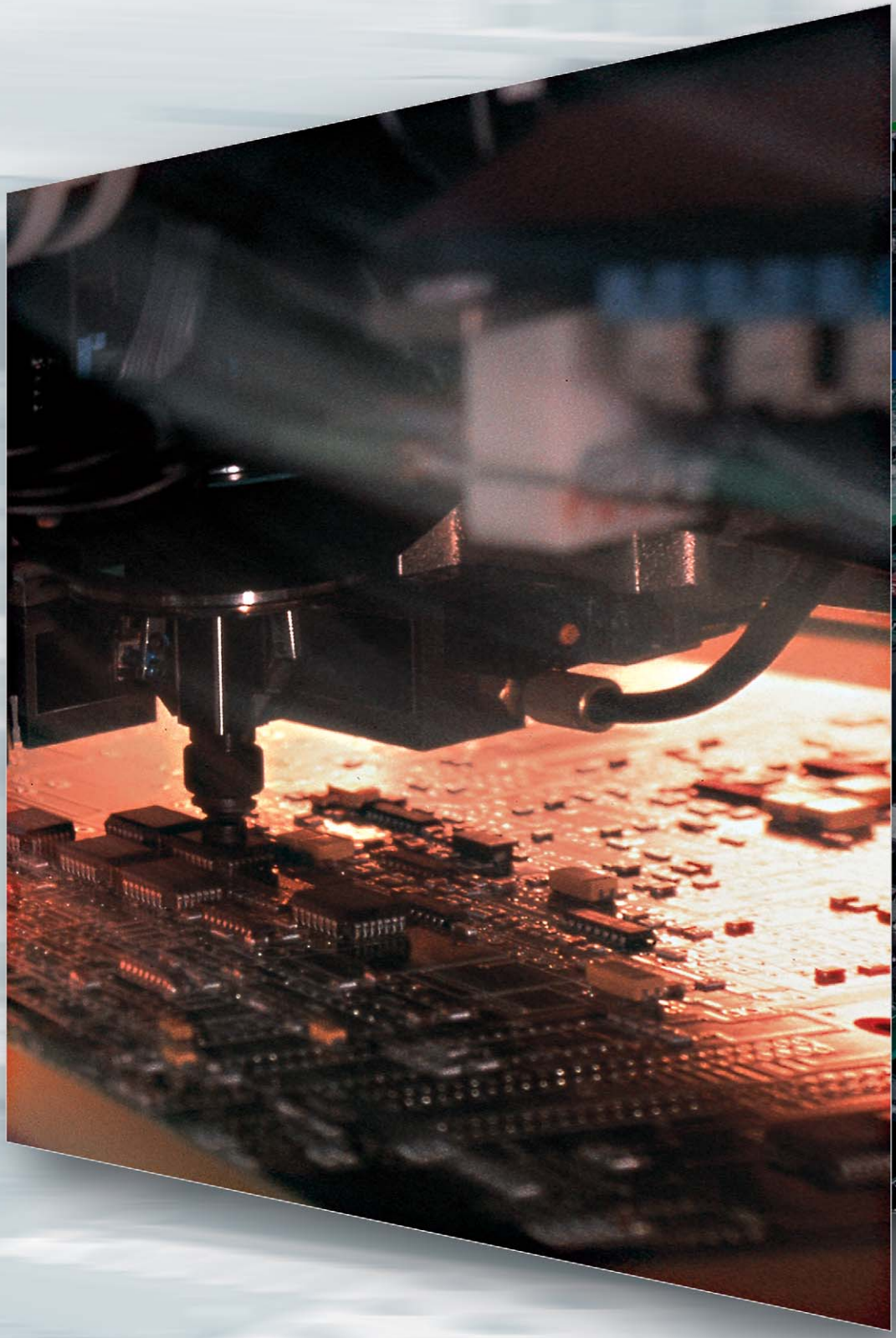

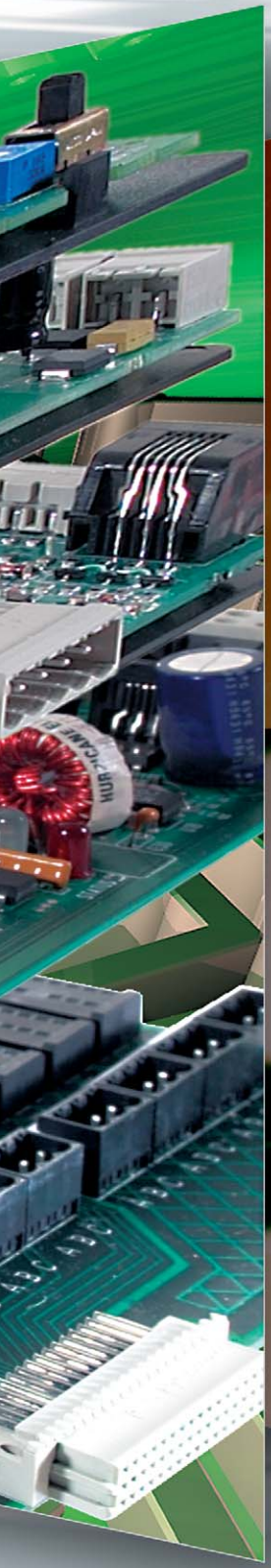

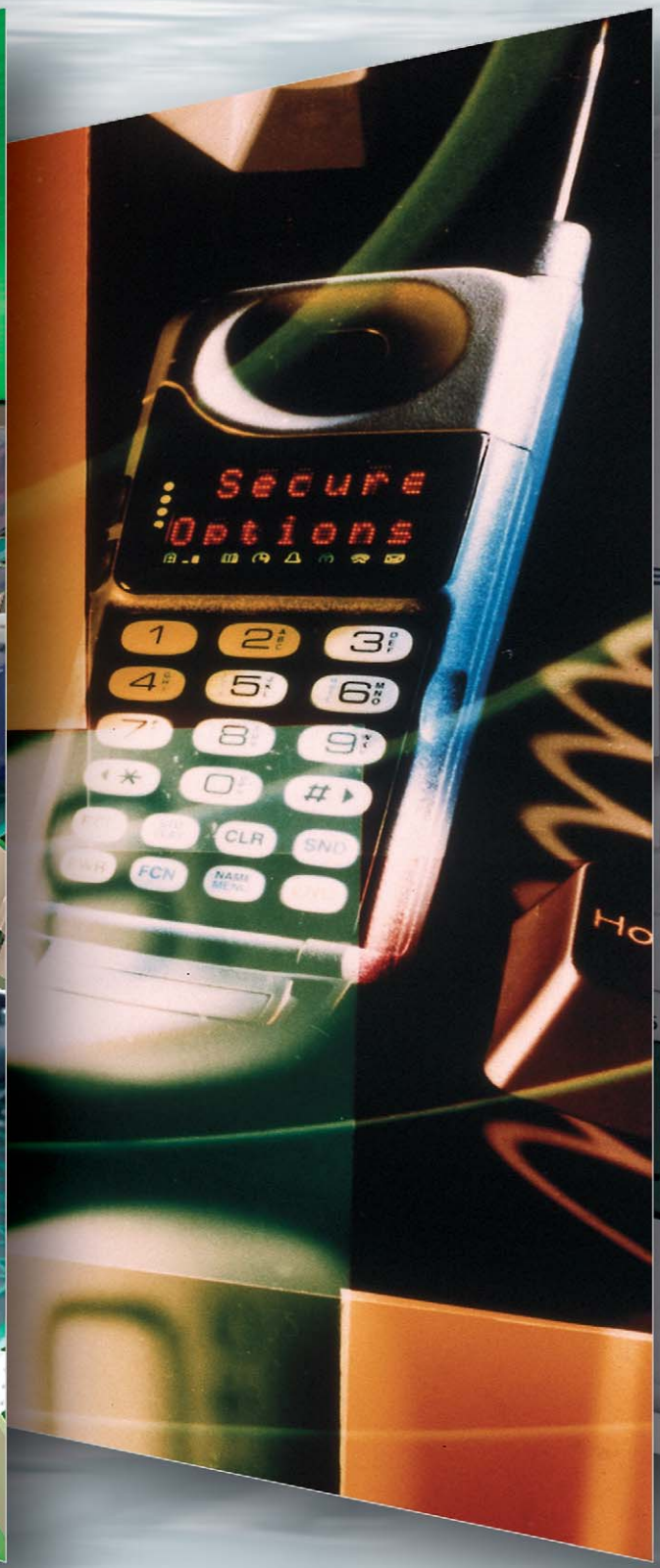

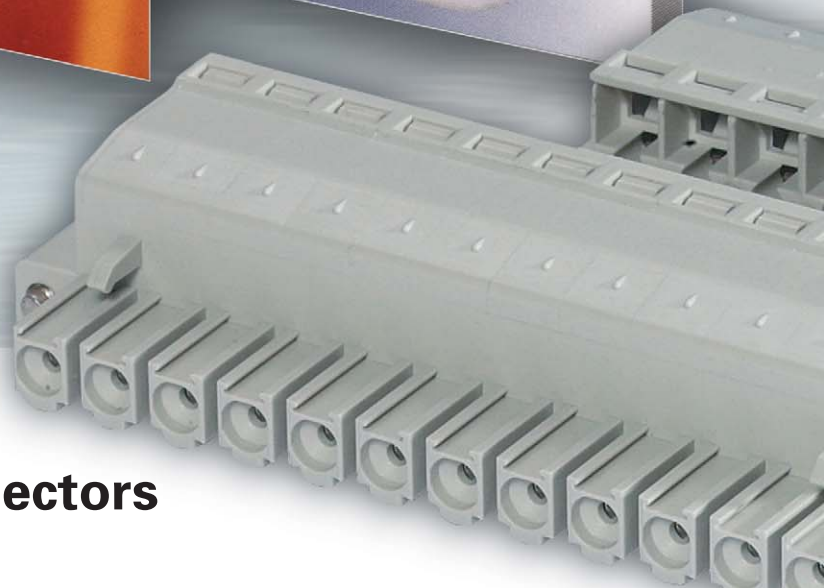

wiecon

PC Board Connectors

PC board connectors

wiecon

All Wieland Components which require CE general certification are CE certified, and identified with the CE logo.

Pluggable PC board connectors with insulated headers, two piece design

Pluggable PC board connectors with pin strip headers, two piece design

DIN rail terminal blocks with pluggable connectors

Pluggable PC board connectors, edge card

PC board connectors

PC board connectors, 2-tier version

PC board connectors, 3-tier version

PC board connectors, 4-tier version

Special-purpose connectors

***RAST 5* connectors**
Feed-through modules for control cabinets
Marking tags / marking tag strips

CONTENTS

wiecon

Spacings: 3.50/3.81 mm	
• Plug connectors, rising cage clamp	Page 280
• Plug connectors, spring clamp	Page 281
• Insulated headers	Page 284
Spacings: 5.00/5.08/7.50/7.62 mm	
• Plug connectors, rising cage clamp	Page 286
• Male plug with spring clamp connection (= inverted plug)	Page 295
• Plug connectors, spring clamp	Page 294
• Board to board connectors	Page 295
• Insulated headers	Page 297
• Pluggable TOP connector with strain relief	Page 320
Spacings: 3.50/5.00 mm Compression screw clamp	Page 316
Spacing: 3.50 mm Spring clamp	Page 324
Spacing: 5.00 mm	
Feed-through DIN rail terminal blocks with pluggable connectors	Page 310
Spacing: 3.50 mm Rising cage clamp	Page 328
Spacing: 5.00 mm Spring clamp	Page 330
Spacings: 3.50/3.81 mm	
• Rising cage clamp	Page 336
Spacings: 5.00/5.08 mm	
• Rising cage clamp	Page 286
• Spring clamp	Page 292
Spacings: 6.35 mm	Page 355
Spacings: 7.50/7.62 mm	
• Rising cage clamp	Page 288
• Spring clamp	Page 294
Spacings: 10.00/10.16 mm	
• Rising cage clamp	Page 318, 375, 377
Spacings: 5.00/5.08 mm	
• Rising cage clamp	Page 364
Spacings: 5.00/5.08 mm	
• Rising cage clamp	Page 370
Spacing: 5.00 mm	
• Rising cage clamp	Page 373
Spacing: 5.08 mm	
• Feed through block	Page 378
• PCB plunger disconnect block	Page 378
• Fused feed through terminal block	Page 379
• AS-I connector – IDC Technology	Page 392
	Page 380
	Page 386
	Page 394

Pluggable PC board connectors with insulated headers, two piece design

wiecon PCB

Spacing: 5.00/5.08 mm Spacing: 7.50/7.62 mm	Spacing:	Poles	Page 298 5.00/5.08 8113 S/W 8213 S/W	Page 301 7.50/7.62 8313 S/W 8413 S/W	Page 299 5.00/5.08 8113 S/WOF 8213 S/WOF	Page 299 5.00/5.08 8113 S/WF 8213 S/WF	Page 301 7.50/7.62 8313 S/WF 8413 S/WF	Page 297 5.00/5.08 8113 S/G 8213 S/G	Page 300 7.50/7.62 8313 S/G 8413 S/G	Page 297 5.00/5.08 8113 S/GOF 8213 S/GOF	Page 298 5.00/5.08 8113 S/GF 8213 S/GF
		2 – 24	2 – 12	2 – 24	2 – 22	2 – 12	2 – 24	2 – 12	2 – 24	2 – 22
Page 291 **8113 BK**	**5.00**	2 – 24	● 8113		● 8113			● 8113		● 8113	
Page 286 **8113 B** **8213 B**	**5.00** **5.08**	2 – 24	●		●			●		●	
Page 292 **8113 BFK** **8213 BFK**	**5.00** **5.08**	2 – 24	●		●	●		●		●	
Page 287 **8213 B/S**	**5.08**	2 – 24						● 8213		● 8213	
Page 288 **8313 B** **8413 B**	**7.50** **7.62**	2 – 22		●					●		
Page 286 **8113 B/F** **8213 B/F**	**5.00** **5.08**	2 – 12				●					●
Page 288 **8313 B/F** **8413 B/F**	**7.50** **7.62**	2 – 24					●				
Page 289 **8113 B/VL** **8213 B/VL**	**5.00** **5.08**	2 – 24	●		●			●		●	
Page 289 **8113 B/VR** **8213 B/VR**	**5.00** **5.08**	2 – 12	●		●			●		●	
Page 290 **8413 B/VL**	**7.62**	2 – 12		●					●		
Page 290 **8413 B/VR**	**7.62**	2 – 24		●					●		
Page 296 **8113 B/TOP** **8213 B/TOP**	**5.00** **5.08**	2 – 24	●		●			●		●	
Page 295 **8213 BL/G**	**5.08**	2 – 24	●		●			●		●	
Page 295 **8213 BL/W**	**5.08**	2 – 24	●		●			●		●	

wiecon

Page 300	Page 302	Page 302	Page 293	Page 303	Page 303	Page 305		Page 305		Page 304	Page 304
7.50/7.62	**5.00/5.08**	**5.00/5.08**	**5.08**	**5.00/5.08**	**5.00/5.08**	**5.08**	**5.08**	**5.08**	**5.08**	**5.00/5.08**	**5.00/5.08**
8313 S/GF 8413 S/GF	**8113 S/S 8213 S/S**	**8113 S/S1 8213 S/S1**	**8213 SUFK**	**8113 SE/W 8213 SE/W**	**8113 SE/G 8213 SE/G**	**8213 S/ DFWW**	**8213 S/ DFWWM**	**8213 S/ DFLS**	**8213 S/ DFLSM**	**8113 SEG/W 8213 SEG/W**	**8113 SEG/G 8213 SEG/G**
2 – 12	2 – 24	2 – 24	2 – 12 (24)	2 – 24 snap together	2 – 24 snap together	2 – 24	2 – 22 with nut	2 – 24	2 – 22 with nut	2 – 24	2 – 24
	● 8113	● 8113		● 8113	● 8113					● 8113	● 8113
	●	●	● 8213	●	●	●		●		●	●
	●	●	● 8213	●	●	●	●	● 8213	●	●	●
	● 8213	● 8213	●		● 8213	●		●	● 8213		● 8213
			● 8213				●		●	●	●
●											
	●	●	● 8213	●	●	●	●	● 8213	● 8213	●	●
	●	●	● 8213	●	●	●	●	● 8213	● 8213	●	●
	●	●	● 8213	●	●	●		●		●	●
	●	●	● 8213							● 8213	● 8213
			● 8213								

IERTES
O 9001
SSICHERUNGSSYSTEM
-Nr. 14 194-02

PC board connectors with DIN rail terminal blocks pluggable

wiecon PCB

			Page 310	Page 310	Page 311	Page 312	Page 312	Page 308
	Spacing:		5.00	5.00	7.50	5.00	7.50	5.00
Spacing: 5.00/7.50 mm								
			2 – 24 snap together	2 – 24 snap together	2 – 12 snap together	2 – 24 snap together	2 – 12 snap together	2 – 24 snap together
Page 286 **8113 B**	**5.00**	2 – 24	●	●		●		
Page 288 **8313 B**	**7.50**	2 – 12			●		●	
Page 289 **8113 B/VL**	**5.00**	2 – 24	●	●		●		
Page 289 **8113 B/VR**	**5.00**	2 – 24	●	●		●		
Page 296 **8113 B/TOP**	**5.00**	2 – 24	●	●		●		
Page 292 **8113 BFK**	**5.00**	2 – 24	●	●		●	●	●

PC board connectors with insulated headers two-piece design

wiecon

	Spacing:		Page 284	Page 285	Page 284	Page 285
			3.50/3.81	3.50/3.81	3.50/3.81	3.50/3.81
Spacing: 3.81 mm **Spacing: 3.50 mm**			**8513 S/W** **8813 S/W**	**8513 S/WF** **8813 S/WF**	**8513 S/G** **8813 S/G**	**8513 S/GF** **8813 S/GF**
			2 – 20	2 – 20	2 – 20	2 – 20
Page 280 **8513 B** **8813 B**	**3.50** **3.81**	2 – 20	●		●	
Page 280 **8513 B/F** **8813 B/F**	**3.50** **3.81**	2 - 20		●		●
Page 282 **8813 B/VR**	**3.81**	2 - 20	● 8813		● 8813	
Page 282 **8813 B/VL**	**3.81**	2 - 20	● 8813		● 8813	
Page 283 **8813 B/VRF**	**3.81**	2 - 20		● 8813		● 8813
Page 283 **8813 B/VLF**	**3.81**	2 - 20		● 8813		● 8813
Page 281 **8513 BFK**	**3.50**	2 – 20	● 8513		● 8513	

wiecon

IERTES
O 9001
SSICHERUNGSSYSTEM
-Nr. 14 194-02

Pluggable PC board connectors with insulated headers, two piece design

wiecon PCB

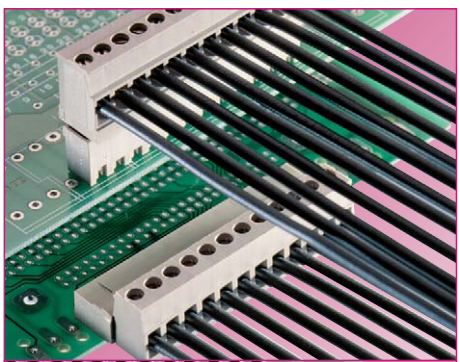

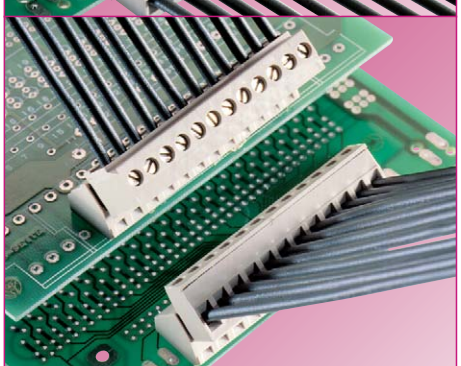

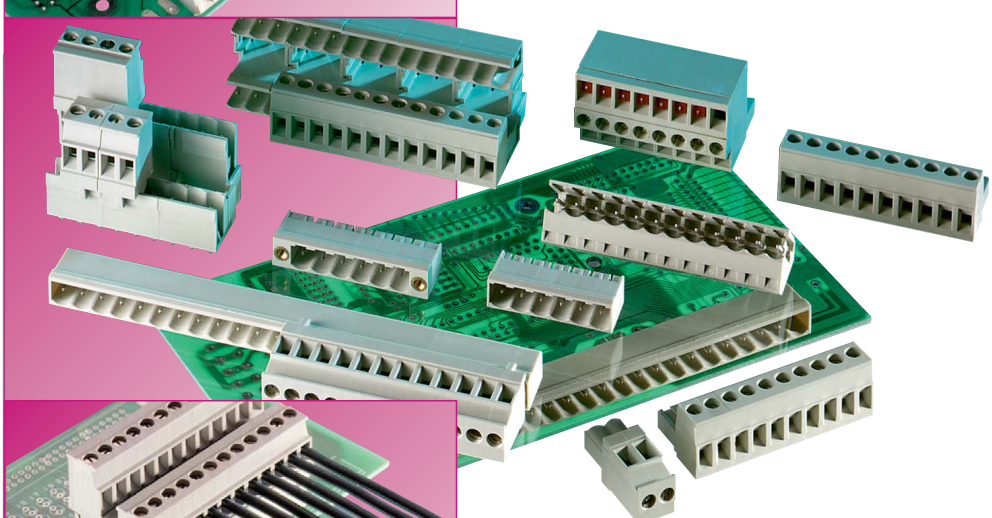

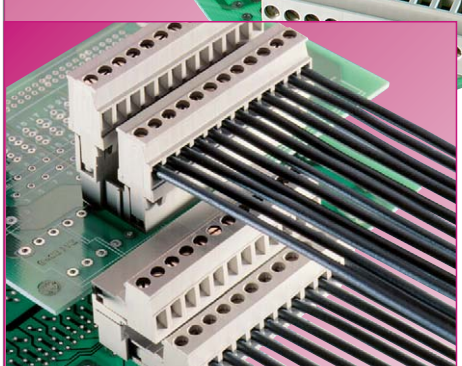

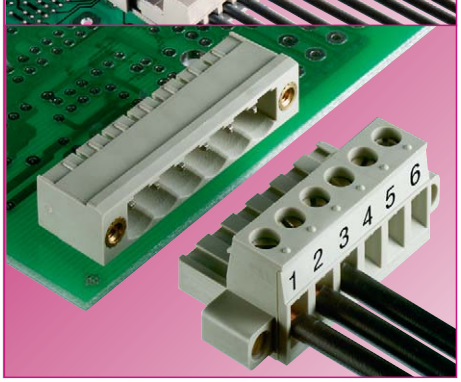

Pluggable connectors provide a simple 2-piece mateable connection between an external connector and the printed circuit board.

System features

- ❒ easy-to-operate, application specific
- ❒ user-friendly pluggability
- ❒ clear, straigthforward connection
- ❒ mating direction and wire insertion for every application
- ❒ quick disconnect
- ❒ multiple pole configurations
- ❒ connection of solid and fine stranded up to 1.5 mm^2 and 2.5 mm^2 (up to 12 AWG)
- ❒ metric and inch spacing; inch spacing is indicated by a stud over the wire entry guide
- ❒ termination via rising cage clamp (screw connection)
- ❒ termination via TOP connection

Coding

- ❒ protection against mis-mating via coding pieces inserted into slots in the plug and header
- ❒ coding without pole loss

Marking

- ❒ inkjet marking directly on the plug and header with smudge-proof ink
- ❒ custom marking possible, consult factory
- ❒ clear, easily legible marking

Flange version

- ❒ additional screw connection of plug and insulated header preventing unintentional disconnect
- ❒ secure electrical and mechanical connection even under high mechanical stress (e.g. vibration)

Field of application

- ❒ pluggable PC board connectors simplify termination and service of PC boards
- ❒ with pre-manufactured cable harnesses, units can be adapted to the individual application without problems
- ❒ all pluggable PC board connectors can be coded without loss of pole position
- ❒ the plugs and their matching insulated headers can be interlocked
- ❒ clear markings ensure simple and correct marking

Variety of types

- ❒ 2 to 24pole
- ❒ mating orientation of the plugs horizontal and vertical to the wire entry
- ❒ plugs mate horizontal and vertical to the printed circuit board
- ❒ insulated headers with vertical and horizontal solder pins
- ❒ insulated headers with pins in 35° angle to the printed circuit board
- ❒ insulated headers with closed sides to prevent mis-mating
- ❒ open-ended insulated headers permit adjacent stacking without pole loss
- ❒ spacings: 3.81/5.00/5.08/ 7.50/7.62/10.00/10.16 mm
- ❒ two-tier headers

DQS certificates for all products

- ❒ quality standard as per DIN ISO 9001
- ❒ in Development, Production, Assembly
- ❒ continuous verification of the quality standard by means of regular internal and external quality audits
- ❒ compatible with certificates of other countries:
  - BSI Certificate, Great Britain
  - SQS Certificate, Switzerland
  - Aib-Vincotte Certificate, Belgium
  - ÖQS Certificate, Austria

wiecon

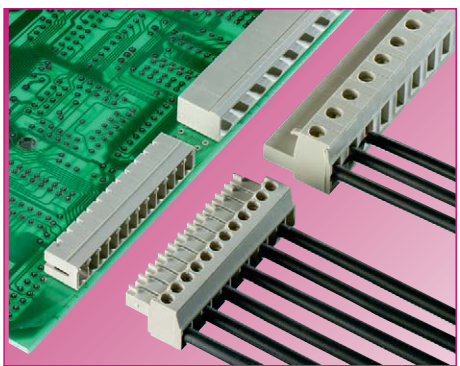

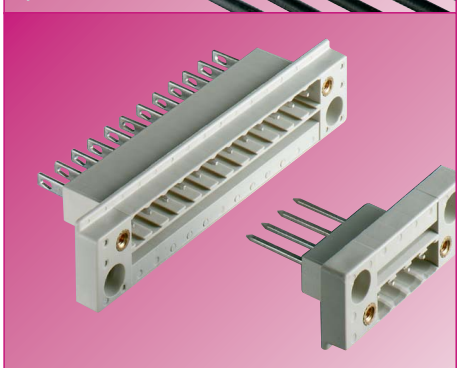

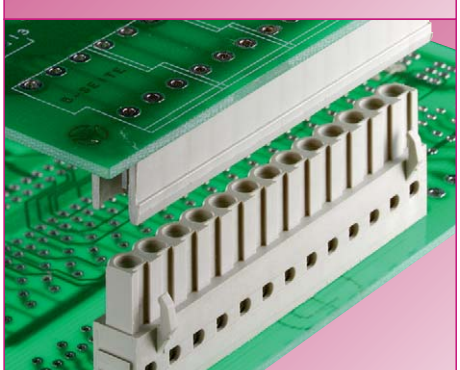

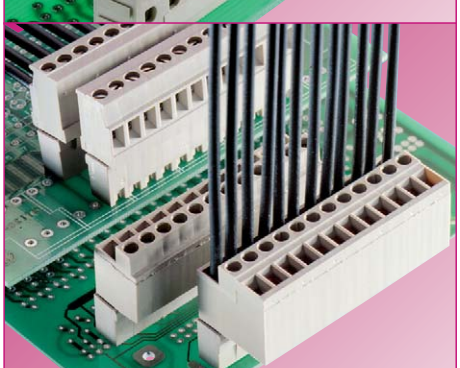

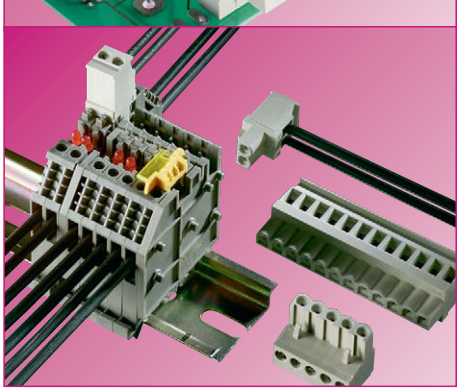

Types 8513-8813

- ❒ micro PC board connectors, 2 to 20 pole
- ❒ plug and insulated header horizontal and vertical to the printed circuit board
- ❒ total height: 11 mm, while only 8 mm above the printed circuit board
- ❒ in space-saving 3.5 and 3.81 mm spacing
- ❒ connector cross section: 1.5 mm^2
- ❒ codable:
  - headers with coding pins
  - plug connectors with removable coding studs
- ❒ with locking screw flange

Panel mount feed through pluggables

- ❒ insulated headers mount directly to panel wall
- ❒ provide pluggable connection at panel
- ❒ header = panel mount feed through
- ❒ optional flange version for vibration secure mating
- ❒ header can be affixed with screws to the housing walls
- ❒ connection inside the housing via wire-wrap or solder connection

Inverted / board to board connectors

- ❒ board mounted female header with vertical and horizontal solder pins
- ❒ codable by means of coding pieces inserted in available slots
- ❒ interlocking flange available as accessory
- ❒ inverted plug available

TOP version

- ❒ screw connection, wire entry and mate direction all in same plane
- ❒ easy to operate in confined spaces
- ❒ with or without integrated LED

Application specific terminals

- ❒ for control systems:
  - DIN rail terminal blocks with pluggable connection at one side
  - plug connectors in 5.00 mm spacing
  - snap on to mounting rail
- ❒ DIN rail terminal blocks with pluggable connection for system 8113
- ❒ vertical plug orientation
- ❒ horizontal plug orientation

Material

Metal parts:

- ❒ made of special alloys and/or special surface platings
- ❒ minimum feed through resistance
- ❒ high corrosion resistance
- ❒ secure, consistent clamping function
- ❒ clamping body and clamping screw: made of nickel-plated brass (TOP version: zinc-plated steel, dichromated)
- ❒ plug contacts: tin-plated bronze
- ❒ solder pins: made from high-quality copper alloy

Insulating housings:

- ❒ Polyamide 66/6 for its excellent electrical, chemical and mechanical characteristics (see section ***facts*** & DATA)
- ❒ all housings UL 94 V-0
- ❒ glass-fibre reinforcement for high dimensional stability (not available for multi-tier header and solder parts)
- ❒ colors: gray, similar to RAL 7032; black; for others consult factory

Abbreviations for plastic materials:

PA 66/6	= Polyamide 66/6
PC	= Polycarbonate
PBT	= Polybutylenterephthalate

Note:
The information regarding cross sectional areas and connection types pertains to conductors without ferrules.

The indicated rated current complies with the maximum load of the PCB connector with connected wire of the indicated rated cross section.

The rated voltage is indicated as per DIN VDE 0110 part 1 (IEC 60 664-1) – isolation coordination for electrical material in low voltage applications – and refers to the delivered state of the PC board connectors.

Before the PC board is fitted with connectors, an appropriate printed circuit board must be selected and dimensioned accordingly (e.g. regarding tracking resistance of the printed circuit board, distances of the leads and solder joints).

Furthermore, the ambient conditions under which the device is to be used (pollution degree) must be considered. The indicated rated voltages will be valid for the complete module only if the pirnted circuit board and its connectors are correctly and carefully matched to each other.

PC board connectors, pluggable, rising cage connection, spacings: 3.50/3.81 mm

wiecon PCB

codable

1.5 mm²

Rated cross section:
1.5 mm²

Rated current:
8 A

Connection range:
0.14 – 1.5 mm² solid / fine standed

125 V/2.5 kV/3 – Overvoltage category III
250 V/2.5 kV/2 – Overvoltage category II
*690 V/2.5 kV/1 – Overvoltage category I

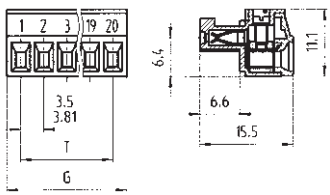

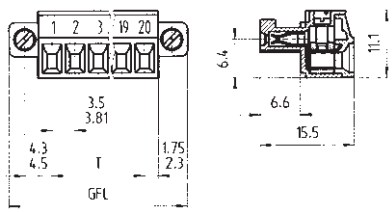

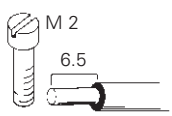

with screw flange

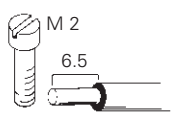

* max. 600 V for ungrounded networks or expected overvoltage ≤ 3 kV for L ≥ 2.00 mm and ≤ 2.5 kV for 2.0 mm > L ≥ 1.5 mm

	Type 8513 B/..., 8813 B/...			Type 8513 B/...F, 8813 B/...F		
	plug-in 180° to wire entry			plug-in 180° to wire entry		
Rated voltages: VDE 0110						
UL ratings	No. 30 – 16 AWG	300 V	8 A	No. 30 – 16 AWG	300 V	8 A
CSA ratings	No. 22 – 14 AWG	300 V	5 A	No. 22 – 14 AWG	300 V	5 A
Approvals						

Std. pack	GFL	G	T	Poles	Part no. unmarked	Part no. marked	Part no. unmarked	Part no. marked
Spacing: 3.50 mm								
100	17.40	7.00	3.50	2	25.640.3253.0	25.640.0253.0	25.641.3253.0	25.641.0253.0
100	20.90	10.50	7.00	3	25.640.3353.0	25.640.0353.0	25.641.3353.0	25.641.0353.0
50	24.40	14.00	10.50	4	25.640.3453.0	25.640.0453.0	25.641.3453.0	25.641.0453.0
50	27.90	17.50	14.00	5	25.640.3553.0	25.640.0553.0	25.641.3553.0	25.641.0553.0
50	31.40	21.00	17.50	6	25.640.3653.0	25.640.0653.0	25.641.3653.0	25.641.0653.0
50	34.90	24.50	21.00	7	25.640.3753.0	25.640.0753.0	25.641.3753.0	25.641.0753.0
50	38.40	28.00	24.50	8	25.640.3853.0	25.640.0853.0	25.641.3853.0	25.641.0853.0
50	41.90	31.50	28.00	9	25.640.3953.0	25.640.0953.0	25.641.3953.0	25.641.0953.0
50	45.40	35.00	31.50	10	25.640.4053.0	25.640.1053.0	25.641.4053.0	25.641.1053.0
50	48.90	38.50	35.00	11	25.640.4153.0	25.640.1153.0	25.641.4153.0	25.641.1153.0
50	52.40	42.00	38.50	12	25.640.4253.0	25.640.1253.0	25.641.4253.0	25.641.1253.0
50	55.90	45.50	42.00	13	25.640.4353.0	25.640.1353.0	25.641.4353.0	25.641.1353.0
50	59.40	49.00	45.50	14	25.640.4453.0	25.640.1453.0	25.641.4453.0	25.641.1453.0
50	62.90	52.50	49.00	15	25.640.4553.0	25.640.1553.0	25.641.4553.0	25.641.1553.0
50	66.40	56.00	52.50	16	25.640.4653.0	25.640.1653.0	25.641.4653.0	25.641.1653.0
			17 to 20pole upon request					
Spacing: 3.81 mm					unmarked	marked	unmarked	marked
100	18.01	8.41	3.81	2	25.620.3253.0	25.620.0253.0	25.621.3253.0	25.621.0253.0
100	21.82	12.22	7.62	3	25.620.3353.0	25.620.0353.0	25.621.3353.0	25.621.0353.0
50	25.63	16.03	11.43	4	25.620.3453.0	25.620.0453.0	25.621.3453.0	25.621.0453.0
50	29.44	19.84	15.24	5	25.620.3553.0	25.620.0553.0	25.621.3553.0	25.621.0553.0
50	33.25	23.65	19.05	6	25.620.3653.0	25.620.0653.0	25.621.3653.0	25.621.0653.0
50	37.06	27.46	22.86	7	25.620.3753.0	25.620.0753.0	25.621.3753.0	25.621.0753.0
50	40.87	31.27	26.67	8	25.620.3853.0	25.620.0853.0	25.621.3853.0	25.621.0853.0
50	44.68	35.08	30.48	9	25.620.3953.0	25.620.0953.0	25.621.3953.0	25.621.0953.0
50	48.49	38.89	34.29	10	25.620.4053.0	25.620.1053.0	25.621.4053.0	25.621.1053.0
50	52.30	42.70	38.10	11	25.620.4153.0	25.620.1153.0	25.621.4153.0	25.621.1153.0
50	56.11	46.51	41.91	12	25.620.4253.0	25.620.1253.0	25.621.4253.0	25.621.1253.0
50	59.92	50.32	45.72	13	25.620.4353.0	25.620.1353.0	25.621.4353.0	25.621.1353.0
50	63.73	54.13	49.53	14	25.620.4453.0	25.620.1453.0	25.621.4453.0	25.621.1453.0
50	67.54	57.94	53.34	15	25.620.4553.0	25.620.1553.0	25.621.4553.0	25.621.1553.0
50	71.35	61.75	57.15	16	25.620.4653.0	25.620.1653.0	25.621.4653.0	25.621.1653.0
			17 to 20pole upon request					

PC board connectors, pluggable, spring clamp connection, spacing: 3.50 mm

codable

Rated cross section:
1.5 mm²

Rated current:
8 A

Connection range:
0.14 – 1.5 mm² solid / fine standed

125 V/2.5 kV/3 – Overvoltage category III
250 V/2.5 kV/2 – Overvoltage category II
*690 V/2.5 kV/1 – Overvoltage category I

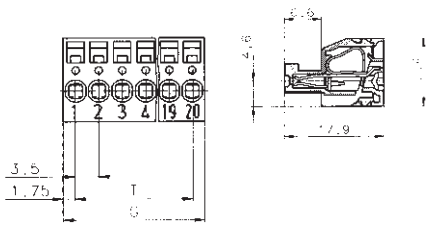

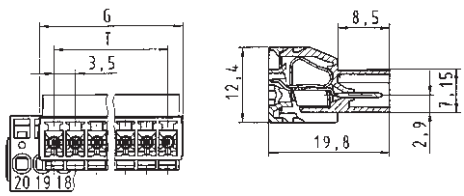

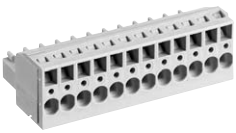

* max. 600 V for ungrounded networks or expected overvoltage ≤ 3 kV for L ≥ 2.00 mm and ≤ 2.5 kV for 2.0 mm > L ≥ 1.5 mm

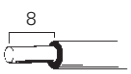

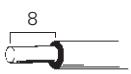

	Type 8513 BFK			Type 8513 SUFK		
VDE 0110						
UL ratings	No. 30 – 16 AWG	300 V	8 A	No. 30 – 16 AWG	300 V	8 A
CSA ratings	No. 22 – 14 AWG	300 V	5 A	No. 22 – 14 AWG	300 V	5 A
Approvals						

Std. pack	G	T	Poles	Part no.	Part no.	Part no.	Part no.
Spacing: 3.50 mm	Type 8513 BFK			unmarked	marked		
100	6.90	3.50	2	25.630.3253.0	25.630.0253.0		
100	10.40	7.00	3	25.630.3353.0	25.630.0353.0		
50	13.90	10.50	4	25.630.3453.0	25.630.0453.0		
50	17.40	14.00	5	25.630.3553.0	25.630.0553.0		
50	20.90	17.50	6	25.630.3653.0	25.630.0653.0		
50	24.40	21.00	7	25.630.3753.0	25.630.0753.0		
50	27.90	24.50	8	25.630.3853.0	25.630.0853.0		
50	31.40	28.00	9	25.630.3953.0	25.630.0953.0		
50	34.90	31.50	10	25.630.4053.0	25.630.1053.0		
50	38.40	35.00	11	25.630.4153.0	25.630.1153.0		
50	41.90	38.50	12	25.630.4253.0	25.630.1253.0		
50	45.40	42.00	13	25.630.4353.0	25.630.1353.0		
50	48.90	45.50	14	25.630.4453.0	25.630.1453.0		
50	52.40	49.00	15	25.630.4553.0	25.630.1553.0		
50	55.90	52.50	16	25.630.4653.0	25.630.1653.0		
	17 to 24pole upon request						
Spacing: 3.50 mm	Type 8513 SUFK					unmarked	marked
100	8.40	3.50	2			25.642.3253.0	25.642.0253.0
100	11.90	7.00	3			25.642.3353.0	25.642.0353.0
50	15.40	10.50	4			25.642.3453.0	25.642.0453.0
50	18.90	14.00	5			25.642.3553.0	25.642.0553.0
50	22.40	17.50	6			25.642.3653.0	25.642.0653.0
50	25.90	21.00	7			25.642.3753.0	25.642.0753.0
50	29.40	24.50	8			25.642.3853.0	25.642.0853.0
50	32.90	28.00	9			25.642.3953.0	25.642.0953.0
50	36.40	31.50	10			25.642.4053.0	25.642.1053.0
50	39.90	35.00	11			25.642.4153.0	25.642.1153.0
50	43.40	38.50	12			25.642.4253.0	25.642.1253.0
	46.90	42.00	13			25.642.4353.0	25.642.1353.0
	50.40	45.50	14			25.642.4453.0	25.642.1453.0
	53.90	49.00	15			25.642.4553.0	25.642.1553.0
	57.40	52.50	16			25.642.4653.0	25.642.1653.0
	17 to 24pole upon request						
Accessories:							
Screwdriver DIN 5264 A 0.4 x 2.5	5			06.502.4300.0			

PC board connectors, pluggable, rising cage connection, spacing: 3.81 mm

wiecon PCB

codable

1.5 mm²

Rated cross section:
1.5 mm²

Rated current:
8 A

Connection range:
0.14 – 1.5 mm² solid / fine standed

125 V/2.5 kV/3 – Overvoltage category III
250 V/2.5 kV/2 – Overvoltage category II
*690 V/2.5 kV/1 – Overvoltage category I

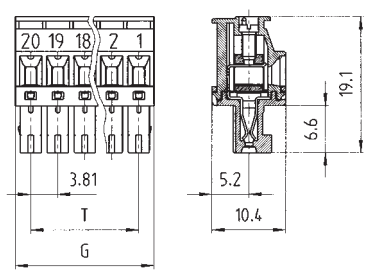

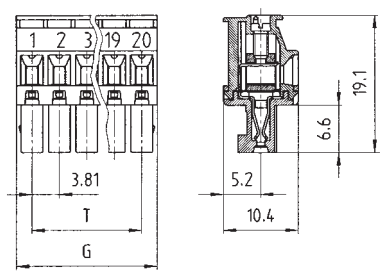

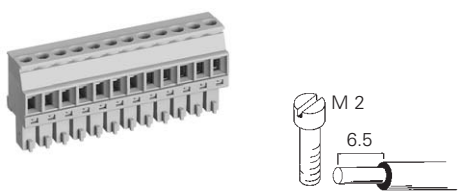

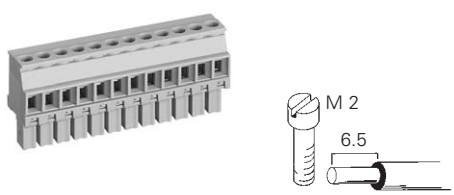

* max. 600 V for ungrounded networks or expected overvoltage ≤ 3 kV for L ≥ 2.00 mm and ≤ 2.5 kV for 2.0 mm > L ≥ 1.5 mm

Type 8813 B/... VR
vertical right plug, 90° to wire entry

Type 8813 B/... VL
vertical left plug, 90° to wire entry

Rated voltages: VDE 0110								
UL ratings					No. 30 – 16 AWG	300 V	8 A	No. 30 – 16 AWG	300 V	8 A
CSA ratings					No. 22 – 14 AWG	300 V	5 A	No. 22 – 14 AWG	300 V	5 A
Approvals										

Std. pack	GFL	G	T	Poles	Part no. unmarked	Part no. marked	Part no. unmarked	Part no. marked
Spacing: 3.81 mm								
100	18.01	8.41	3.81	2	25.622.3253.0	25.622.0253.0	25.624.3253.0	25.624.0253.0
100	21.82	12.22	7.62	3	25.622.3353.0	25.622.0353.0	25.624.3353.0	25.624.0353.0
50	25.63	16.03	11.43	4	25.622.3453.0	25.622.0453.0	25.624.3453.0	25.624.0453.0
50	29.44	19.84	15.24	5	25.622.3553.0	25.622.0553.0	25.624.3553.0	25.624.0553.0
50	33.25	23.65	19.05	6	25.622.3653.0	25.622.0653.0	25.624.3653.0	25.624.0653.0
50	37.06	27.46	22.86	7	25.622.3753.0	25.622.0753.0	25.624.3753.0	25.624.0753.0
50	40.87	31.27	26.67	8	25.622.3853.0	25.622.0853.0	25.624.3853.0	25.624.0853.0
50	44.68	35.08	30.48	9	25.622.3953.0	25.622.0953.0	25.624.3953.0	25.624.0953.0
50	48.49	38.89	34.29	10	25.622.4053.0	25.622.1053.0	25.624.4053.0	25.624.1053.0
50	52.30	42.70	38.10	11	25.622.4153.0	25.622.1153.0	25.624.4153.0	25.624.1153.0
50	56.11	46.51	41.91	12	25.622.4253.0	25.622.1253.0	25.624.4253.0	25.624.1253.0
50	59.92	50.32	45.72	13	25.622.4353.0	25.622.1353.0	25.624.4353.0	25.624.1353.0
50	63.73	54.13	49.53	14	25.622.4453.0	25.622.1453.0	25.624.4453.0	25.624.1453.0
50	67.54	57.94	53.34	15	25.622.4553.0	25.622.1553.0	25.624.4553.0	25.624.1553.0
50	71.35	61.75	57.15	16	25.622.4653.0	25.622.1653.0	25.624.4653.0	25.624.1653.0
17 to 20pole upon request								

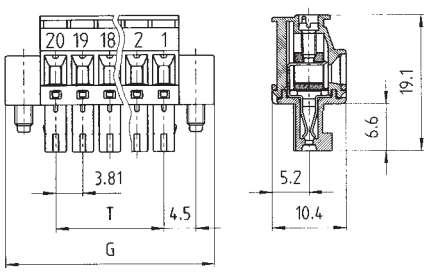

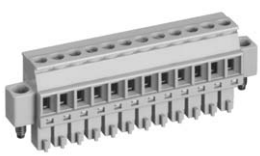

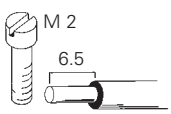

with screw flange

Type 8813 B/... VR F

vertical right plug, 90° to wire entry

No. 30 – 16 AWG	300 V	8 A
No. 22 – 14 AWG	300 V	5 A

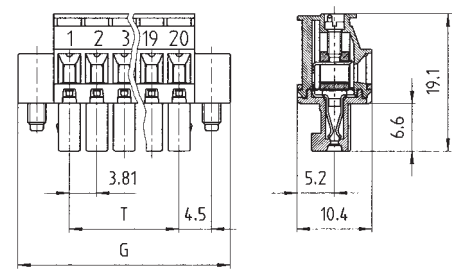

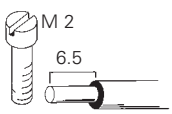

with screw flange

Type 8813 B/... VL F

vertical left plug, 90° to wire entry

No. 30 – 16 AWG	300 V	8 A
No. 22 – 14 AWG	300 V	5 A

Part no. unmarked	Part no. marked	Part no. unmarked	Part no. marked	
25.623.3253.0	25.623.0253.0	25.625.3253.0	25.625.0253.0	
25.623.3353.0	25.623.0353.0	25.625.3353.0	25.625.0353.0	
25.623.3453.0	25.623.0453.0	25.625.3453.0	25.625.0453.0	
25.623.3553.0	25.623.0553.0	25.625.3553.0	25.625.0553.0	
25.623.3653.0	25.623.0653.0	25.625.3653.0	25.625.0653.0	
25.623.3753.0	25.623.0753.0	25.625.3753.0	25.625.0753.0	
25.623.3853.0	25.623.0853.0	25.625.3853.0	25.625.0853.0	
25.623.3953.0	25.623.0953.0	25.625.3953.0	25.625.0953.0	
25.623.4053.0	25.623.1053.0	25.625.4053.0	25.625.1053.0	
25.623.4153.0	25.623.1153.0	25.625.4153.0	25.625.1153.0	
25.623.4253.0	25.623.1253.0	25.625.4253.0	25.625.1253.0	
25.623.4353.0	25.623.1353.0	25.625.4353.0	25.625.1353.0	
25.623.4453.0	25.623.1453.0	25.625.4453.0	25.625.1453.0	
25.623.4553.0	25.623.1553.0	25.625.4553.0	25.625.1553.0	
25.623.4653.0	25.640.1653.0	25.625.4653.0	25.625.1653.0	

Insulated headers for PC boards
Spacings: 3.50/3.81 mm

wiecon PCB

codable

1.5 mm²

Rated current:
8 A

125 V/2.5 kV/3 – Overvoltage category III
250 V/2.5 kV/2 – Overvoltage category II
*690 V/2.5 kV/1 – Overvoltage category I

Approvals for type 8513 available soon

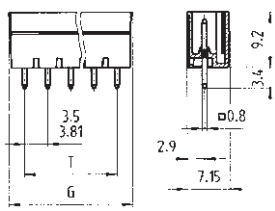

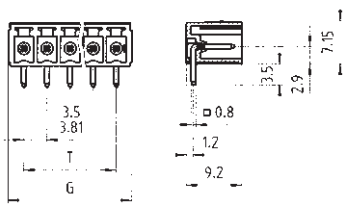

* max. 600 V for ungrounded networks or expected overvoltage ≤ 3 kV for L ≥ 2.00 mm and ≤ 2.5 kV for 2.0 mm > L ≥ 1.5 mm

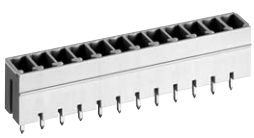

Solder pin 0.8 x 0.8 mm
Bore hole Ø 1.2 mm

Type 8513 S/... G, 8813 S/... G
vertical mount

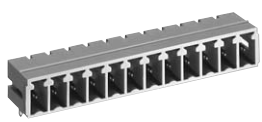

Solder pin 0.8 x 0.8 mm
Bore hole Ø 1.2 mm

Type 8513 S/... W, 8813 S/... W
horizontal mount

Rated voltages: VDE 0110											
UL ratings						300 V	8 A			300 V	8 A
CSA ratings						300 V	5 A			300 V	5 A
Approvals											
Std. pack	GFL	G	T	Poles	Part no.		Part no.		Part no.		Part no.
Spacing: 3.50 mm					unmarked				unmarked		
100	17.40	8.40	3.50	2	25.646.0253.0				25.647.0253.0		
100	20.90	11.90	7.00	3	25.646.0353.0				25.647.0353.0		
50	24.40	15.40	10.50	4	25.646.0453.0				25.647.0453.0		
50	27.90	18.90	14.00	5	25.646.0553.0				25.647.0553.0		
50	31.40	22.40	17.50	6	25.646.0653.0				25.647.0653.0		
50	34.90	25.90	21.00	7	25.646.0753.0				25.647.0753.0		
50	38.40	29.40	24.50	8	25.646.0853.0				25.647.0853.0		
50	41.90	32.90	28.00	9	25.646.0953.0				25.647.0953.0		
50	45.40	36.40	31.50	10	25.646.1053.0				25.647.1053.0		
50	48.90	39.90	35.00	11	25.646.1153.0				25.647.1153.0		
50	52.40	43.40	38.50	12	25.646.1253.0				25.647.1253.0		
50	55.90	46.90	42.00	13	25.646.1353.0				25.647.1353.0		
50	59.40	50.40	45.50	14	25.646.1453.0				25.647.1453.0		
50	62.90	53.90	49.00	15	25.646.1553.0				25.647.1553.0		
50	66.40	57.40	52.50	16	25.646.1653.0				25.647.1653.0		
			17 to 20pole upon request								
Spacing: 3.81 mm					unmarked				unmarked		
100	18.01	9.01	3.81	2	25.626.0253.0				25.627.0253.0		
100	21.82	12.82	7.62	3	25.626.0353.0				25.627.0353.0		
50	25.63	16.63	11.43	4	25.626.0453.0				25.627.0453.0		
50	29.44	20.44	15.24	5	25.626.0553.0				25.627.0553.0		
50	33.25	24.25	19.05	6	25.626.0653.0				25.627.0653.0		
50	37.06	28.06	22.86	7	25.626.0753.0				25.627.0753.0		
50	40.87	31.87	26.67	8	25.626.0853.0				25.627.0853.0		
50	44.68	35.68	30.48	9	25.626.0953.0				25.627.0953.0		
50	48.49	39.49	34.29	10	25.626.1053.0				25.627.1053.0		
50	52.30	43.30	38.10	11	25.626.1153.0				25.627.1153.0		
50	56.11	47.11	41.91	12	25.626.1253.0				25.627.1253.0		
50	59.92	50.92	45.72	13	25.626.1353.0				25.627.1353.0		
50	63.73	54.73	49.53	14	25.626.1453.0				25.627.1453.0		
50	67.54	58.54	53.34	15	25.626.1553.0				25.627.1553.0		
50	71.35	62.35	57.15	16	25.626.1653.0				25.627.1653.0		
			17 to 20pole upon request								
Accessories:											
Coding piece (strip)	100				05.561.0053.0				05.561.0053.0		
Coding studs are molded into plugs; remove with knife at desired coding location											

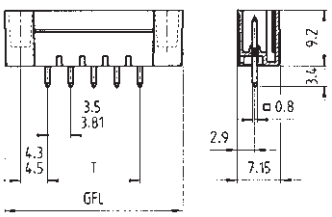

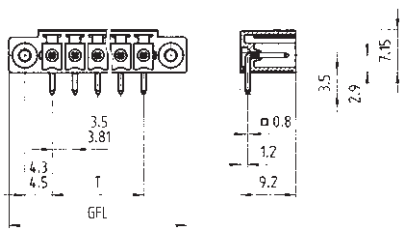

with screw flange

Solder pin 0.8 x 0.8 mm
Bore hole Ø 1.2 mm

with screw flange

Solder pin 0.8 x 0.8 mm
Bore hole Ø 1.2 mm

Type 8513 S/... GF, 8813 S/... GF

vertical mount

300 V 8 A
300 V 5 A

Type 8513 S/... WF, 8813 S/... WF

horizontal mount

300 V 8 A
300 V 5 A

Part no.	Part no.	Part no.	Part no.	
unmarked		unmarked		
25.646.3253.0 25.646.3353.0 25.646.3453.0		25.647.3253.0 25.647.3353.0 25.647.3453.0		
25.646.3553.0 25.646.3653.0 25.646.3753.0		25.647.3553.0 25.647.3653.0 25.647.3753.0		
25.646.3853.0 25.646.3953.0 25.646.4053.0		25.647.3853.0 25.647.3953.0 25.647.4053.0		
25.646.4153.0 25.646.4253.0 25.646.4353.0		25.647.4153.0 25.647.4253.0 25.647.4353.0		
25.646.4453.0 25.646.4553.0 25.646.4653.0		25.647.4453.0 25.647.4553.0 25.647.4653.0		
unmarked		unmarked		
25.626.3253.0 25.626.3353.0 25.626.3453.0		25.627.3253.0 25.627.3353.0 25.627.3453.0		
25.626.3553.0 25.626.3653.0 25.626.3753.0		25.627.3553.0 25.627.3653.0 25.627.3753.0		
25.626.3853.0 25.626.3953.0 25.626.4053.0		25.627.3853.0 25.627.3953.0 25.627.4053.0		
25.626.4153.0 25.626.4253.0 25.626.4353.0		25.627.4153.0 25.627.4253.0 25.627.4353.0		
25.626.4453.0 25.626.4553.0 25.626.4653.0		25.627.4453.0 25.627.4553.0 25.627.4653.0		
05.561.0053.0		05.561.0053.0		

PC board connectors, pluggable, rising cage connection, spacings: 5.00/5.08 mm

wiecon PCB

codable

2.5 mm²

Rated cross section:
2.5 mm²

Rated current:
12 A

Connection range:
0.14 – 2.5 mm² solid / fine standed

250 V/4 kV/3 – Overvoltage category III
400 V/4 kV/2 – Overvoltage category II
1000 V/4 kV/1 – Overvoltage category I

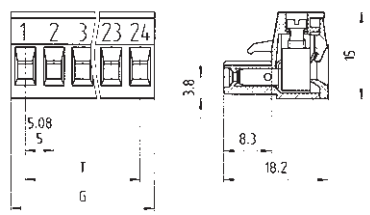

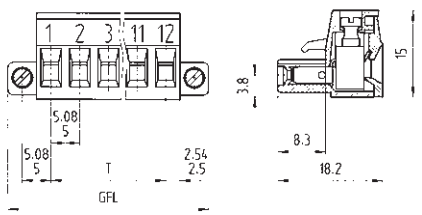

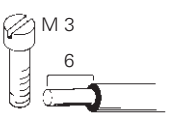

Type 8113 B/..., 8213 B/...
plug-in 180° to wire entry

with screw flange

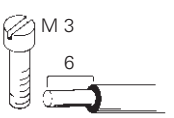

Type 8113 B/... F, 8213 B/... F
plug-in 180° to wire entry

Rated voltages: VDE 0110				
UL ratings	No. 22 – 12 AWG	300 V	15 A	No. 22 – 12 AWG 300 V 15 A
CSA ratings	No. 22 – 12 AWG	300 V	15 A	No. 22 – 12 AWG 300 V 15 A
Approvals				

Std. pack	GFL	G	T	Poles	Part no. unmarked	Part no. marked	Part no. unmarked	Part no. marked
Spacing: 5.00 mm			Type 8113		unmarked	marked	unmarked	marked
100	20	10	5	2	25.320.3253.0	25.320.0253.0	25.322.3253.0	25.322.0253.0
100	25	15	10	3	25.320.3353.0	25.320.0353.0	25.322.3353.0	25.322.0353.0
50	30	20	15	4	25.320.3453.0	25.320.0453.0	25.322.3453.0	25.322.0453.0
50	35	25	20	5	25.320.3553.0	25.320.0553.0	25.322.3553.0	25.322.0553.0
50	40	30	25	6	25.320.3653.0	25.320.0653.0	25.322.3653.0	25.322.0653.0
50	45	35	30	7	25.320.3753.0	25.320.0753.0	25.322.3753.0	25.322.0753.0
50	50	40	35	8	25.320.3853.0	25.320.0853.0	25.322.3853.0	25.322.0853.0
50	55	45	40	9	25.320.3953.0	25.320.0953.0	25.322.3953.0	25.322.0953.0
50	60	50	45	10	25.320.4053.0	25.320.1053.0	25.322.4053.0	25.322.1053.0
50	65	55	50	11	25.320.4153.0	25.320.1153.0	25.322.4153.0	25.322.1153.0
50	70	60	55	12	25.320.4253.0	25.320.1253.0	25.322.4253.0	25.322.1253.0
50	75	65	60	13	25.320.4353.0	25.320.1353.0	25.322.4353.0	25.322.1353.0
50	80	70	65	14	25.320.4453.0	25.320.1453.0	25.322.4453.0	25.322.1453.0
50	85	75	70	15	25.320.4553.0	25.320.1553.0	25.322.4553.0	25.322.1553.0
50	90	80	75	16	25.320.4653.0	25.320.1653.0	25.322.4653.0	25.322.1653.0
					17 to 24pole upon request		17 to 22pole upon request	
Spacing: 5.08 mm			Type 8213		unmarked	marked	unmarked	marked
100	20.32	10.16	5.08	2	25.340.3253.0	25.340.0253.0	25.323.3253.0	25.323.0253.0
100	25.40	15.24	10.16	3	25.340.3353.0	25.340.0353.0	25.323.3353.0	25.323.0353.0
50	30.48	20.32	15.24	4	25.340.3453.0	25.340.0453.0	25.323.3453.0	25.323.0453.0
50	35.56	25.40	20.32	5	25.340.3553.0	25.340.0553.0	25.323.3553.0	25.323.0553.0
50	40.64	30.48	25.40	6	25.340.3653.0	25.340.0653.0	25.323.3653.0	25.323.0653.0
50	45.72	35.56	30.48	7	25.340.3753.0	25.340.0753.0	25.323.3753.0	25.323.0753.0
50	50.80	40.64	35.56	8	25.340.3853.0	25.340.0853.0	25.323.3853.0	25.323.0853.0
50	55.88	45.72	40.64	9	25.340.3953.0	25.340.0953.0	25.323.3953.0	25.323.0953.0
50	60.96	50.80	45.72	10	25.340.4053.0	25.340.1053.0	25.323.4053.0	25.323.1053.0
50	66.04	55.88	50.80	11	25.340.4153.0	25.340.1153.0	25.323.4153.0	25.323.1153.0
50	71.12	60.96	55.88	12	25.340.4253.0	25.340.1253.0	25.323.4253.0	25.323.1253.0
50	76.20	66.04	60.96	13	25.340.4353.0	25.340.1353.0	25.323.4353.0	25.323.1353.0
50	81.28	71.12	66.04	14	25.340.4453.0	25.340.1453.0	25.323.4453.0	25.323.1453.0
50	86.36	76.20	71.12	15	25.340.4553.0	25.340.1553.0	25.323.4553.0	25.323.1553.0
50	91.44	81.28	76.20	16	25.340.4653.0	25.340.1653.0	25.323.4653.0	25.323.1653.0
					17 to 22pole upon request		17 to 22pole upon request	
Accessories:								
Coding piece (strip)	100				05.561.9153.0		05.561.9153.0	

Rated cross section:
2.5 mm²

Rated current:
12 A
related to 20 °C ambient temperature,
rated cross section and max. pole configuration

Connection range:
0.5 – 2.5 mm² solid / fine standed

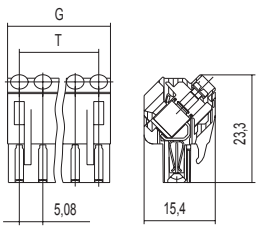

250 V/4 kV/3 – Overvoltage category III
400 V/4 kV/2 – Overvoltage category II
400 V/4 kV/1 – Overvoltage category I

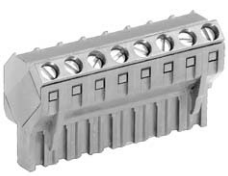

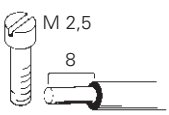

Type 8213 B/...S

Rated voltages: VDE 0110/1.89

UL ratings	No. 28 – 12 AWG	300 V	10 A
CSA ratings	No. 28 – 12 AWG	300 V	10 A
Approvals			

Std. pack	GFL	G	T	Poles	Part no.	Part no.	
Spacing: 5.08 mm					unmarked		
100		10.16	5.08	2	27.341.3253.0		
100		15.24	10.16	3	27.341.3353.0		
50		20.32	15.24	4	27.341.3453.0		
50		25.40	20.32	5	27.341.3553.0		
50		30.48	25.40	6	27.341.3653.0		
50		35.56	30.48	7	27.341.3753.0		
50		40.64	35.56	8	27.341.3853.0		
50		45.72	40.64	9	27.341.3953.0		
50		50.80	45.72	10	27.341.4053.0		
50		55.88	50.80	11	27.341.4153.0		
50		60.96	55.88	12	27.341.4253.0		
50		66.04	60.96	13	27.341.4353.0		
50		71.12	66.04	14	27.341.4453.0		
50		76.20	71.12	15	27.341.4553.0		
50		81.28	76.20	16	27.341.4653.0		
					17 to 24pole upon request		
					Coding available upon request		

PC board connectors, pluggable, rising cage connection, spacings: 7.50/7.62 mm

wiecon PCB

codable

2.5 mm²

Rated cross section:
2.5 mm²

Rated current:
12 A

Connection range:
0.14 – 2.5 mm² solid / fine standed

400 V/4 kV/3 – Overvoltage category III
690 V/4 kV/2 – Overvoltage category II
1000 V/4 kV/1 – Overvoltage category I

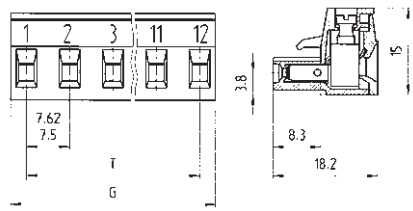

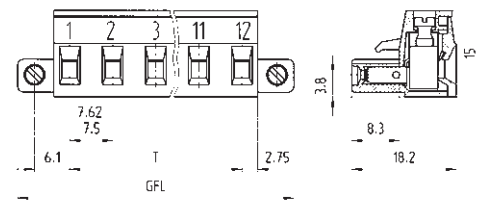

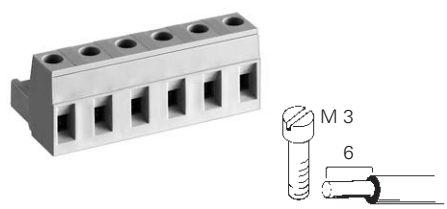

Type 8313 B/..., 8413 B/...
plug-in 180° to wire entry

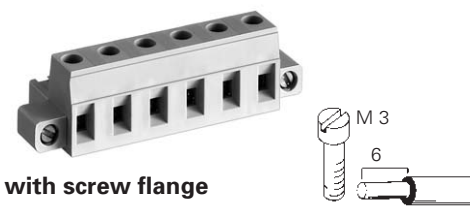

with screw flange

Type 8313 B/... F, 8413 B/... F
plug-in 180° to wire entry

Rated voltages: VDE 0110				
UL ratings	No. 22 – 12 AWG	300 V	15 A	No. 22 – 12 AWG 300 V 15 A
CSA ratings	No. 22 – 12 AWG	300 V	15 A	No. 22 – 12 AWG 300 V 15 A
Approvals				

Std. pack	GFL	G	T	Poles	Part no. unmarked	Part no. marked	Part no. unmarked	Part no. marked
Spacing: 7.50 mm			Type 8313		unmarked	marked	unmarked	marked
100	25.54	13.00	7.50	2	25.360.3253.0	25.360.0253.0	25.324.2253.0	25.324.0253.0
100	33.04	20.50	15.00	3	25.360.3353.0	25.360.0353.0	25.324.2353.0	25.324.0353.0
50	40.54	28.00	22.50	4	25.360.3453.0	25.360.0453.0	25.324.2453.0	25.324.0453.0
50	48.04	35.50	30.00	5	25.360.3553.0	25.360.0553.0	25.324.2553.0	25.324.0553.0
50	55.54	43.00	37.50	6	25.360.3653.0	25.360.0653.0	25.324.2653.0	25.324.0653.0
50	63.04	50.50	45.00	7	25.360.3753.0	25.360.0753.0	25.324.2753.0	25.324.0753.0
50	70.54	58.00	52.50	8	25.360.3853.0	25.360.0853.0	25.324.2853.0	25.324.0853.0
50	78.04	65.50	60.00	9	25.360.3953.0	25.360.0953.0	25.324.2953.0	25.324.0953.0
50	85.54	73.00	67.50	10	25.360.4053.0	25.360.1053.0	25.324.3053.0	25.324.1053.0
50	93.04	80.50	75.00	11	25.360.4153.0	25.360.1153.0	25.324.3153.0	25.324.1153.0
50	100.54	88.00	82.50	12	25.360.4253.0	25.360.1253.0	25.324.3253.0	25.324.1253.0
Spacing: 7.62 mm			Type 8413		unmarked	marked	unmarked	marked
100	25.66	13.12	7.62	2	25.380.3253.0	25.380.0253.0	25.324.6253.0	
100	33.28	20.74	15.24	3	25.380.3353.0	25.380.0353.0	25.324.6353.0	
50	40.90	28.36	22.86	4	25.380.3453.0	25.380.0453.0	25.324.6453.0	
50	48.52	35.98	30.48	5	25.380.3553.0	25.380.0553.0	25.324.6553.0	
50	56.14	43.60	38.10	6	25.380.3653.0	25.380.0653.0	25.324.6653.0	
50	63.76	51.22	45.72	7	25.380.3753.0	25.380.0753.0	25.324.6753.0	
50	71.38	58.84	53.34	8	25.380.3853.0	25.380.0853.0	25.324.6853.0	
50	79.00	66.46	60.96	9	25.380.3953.0	25.380.0953.0	25.324.6953.0	
50	86.62	74.08	68.58	10	25.380.4053.0	25.380.1053.0	25.324.7053.0	
50	94.24	81.70	76.20	11	25.380.4153.0	25.380.1153.0	25.324.7153.0	
50	101.86	89.32	83.82	12	25.380.4253.0	25.380.1253.0	25.324.7253.0	
Accessories:								
Coding piece (strip)	100				05.561.9153.0		05.561.9153.0	

PC board connectors, pluggable, rising cage connection, spacings 5.00/5.08 mm

codable

2.5 mm²

Rated cross section:
2.5 mm²

Rated current:
12 A

Connection range:
0.14 – 2.5 mm² solid / fine standed

250 V/4 kV/3 – Overvoltage category III
400 V/4 kV/2 – Overvoltage category II
1000 V/4 kV/1 – Overvoltage category I

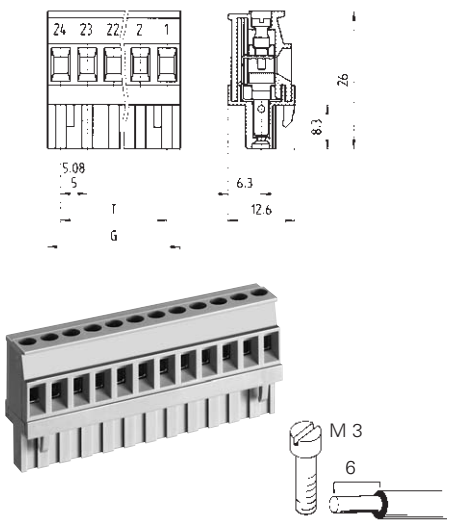

Type 8113 B/... VR, 8213 B/... VR
vertical right plug, 90° to wire entry

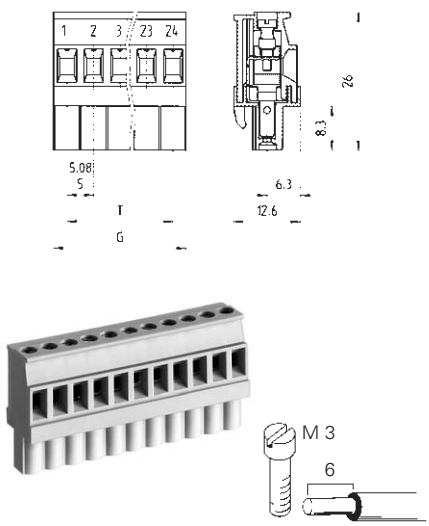

Type 8113 B/... VL, 8213 B/... VL
vertical left plug, 90° to wire entry

Rated voltages: VDE 0110			
UL ratings	No. 22 – 12 AWG	300 V	15 A
CSA ratings	No. 22 – 12 AWG	300 V	15 A
Approvals			

Std. pack	G	T	Poles	Part no.	Part no.	Part no.	Part no.
Spacing: 5.00 mm		Type 8113		unmarked	marked	unmarked	marked
100	10	5	2	25.325.3253.0	25.325.0253.0	25.326.3253.0	25.326.0253.0
100	15	10	3	25.325.3353.0	25.325.0353.0	25.326.3353.0	25.326.0353.0
50	20	15	4	25.325.3453.0	25.325.0453.0	25.326.3453.0	25.326.0453.0
50	25	20	5	25.325.3553.0	25.325.0553.0	25.326.3553.0	25.326.0553.0
50	30	25	6	25.325.3653.0	25.325.0653.0	25.326.3653.0	25.326.0653.0
50	35	30	7	25.325.3753.0	25.325.0753.0	25.326.3753.0	25.326.0753.0
50	40	35	8	25.325.3853.0	25.325.0853.0	25.326.3853.0	25.326.0853.0
50	45	40	9	25.325.3953.0	25.325.0953.0	25.326.3953.0	25.326.0953.0
50	50	45	10	25.325.4053.0	25.325.1053.0	25.326.4053.0	25.326.1053.0
50	55	50	11	25.325.4153.0	25.325.1153.0	25.326.4153.0	25.326.1153.0
50	60	55	12	25.325.4253.0	25.325.1253.0	25.326.4253.0	25.326.1253.0
50	65	60	13	25.325.4353.0	25.325.1353.0	25.326.4353.0	25.326.1353.0
50	70	65	14	25.325.4453.0	25.325.1453.0	25.326.4453.0	25.326.1453.0
50	75	70	15	25.325.4553.0	25.325.1553.0	25.326.4553.0	25.326.1553.0
50	80	75	16	25.325.4653.0	25.325.1653.0	25.326.4653.0	25.326.1653.0
	17 to 24pole upon request						
Spacing: 5.08 mm		Type 8213		unmarked	marked	unmarked	marked
100	10.16	5.08	2	25.345.3253.0	25.345.0253.0	25.346.3253.0	25.346.0253.0
100	15.24	10.16	3	25.345.3353.0	25.345.0353.0	25.346.3353.0	25.346.0353.0
50	20.32	15.24	4	25.345.3453.0	25.345.0453.0	25.346.3453.0	25.346.0453.0
50	25.40	20.32	5	25.345.3553.0	25.345.0553.0	25.346.3553.0	25.346.0553.0
50	30.48	25.40	6	25.345.3653.0	25.345.0653.0	25.346.3653.0	25.346.0653.0
50	35.56	30.48	7	25.345.3753.0	25.345.0753.0	25.346.3753.0	25.346.0753.0
50	40.64	35.56	8	25.345.3853.0	25.345.0853.0	25.346.3853.0	25.346.0853.0
50	45.72	40.64	9	25.345.3953.0	25.345.0953.0	25.346.3953.0	25.346.0953.0
50	50.80	45.72	10	25.345.4053.0	25.345.1053.0	25.346.4053.0	25.346.1053.0
50	55.88	50.80	11	25.345.4153.0	25.345.1153.0	25.346.4153.0	25.346.1153.0
50	60.96	55.88	12	25.345.4253.0	25.345.1253.0	25.346.4253.0	25.346.1253.0
50	66.04	60.96	13	25.345.4353.0	25.345.1353.0	25.346.4353.0	25.346.1353.0
50	71.12	66.04	14	25.345.4453.0	25.345.1453.0	25.346.4453.0	25.346.1453.0
50	76.20	71.12	15	25.345.4553.0	25.345.1553.0	25.346.4553.0	25.346.1553.0
50	81.28	76.20	16	25.345.4653.0	25.345.1653.0	25.346.4653.0	25.346.1653.0
	17 to 24pole upon request						
Accessories:							
Coding piece (strip)	100			05.561.9153.0		05.561.9153.0	

PC board connectors, pluggable, rising cage connection, spacing: 7.62 mm

wiecon PCB

codable

Rated cross section:
2.5 mm²

Rated current:
12 A

Connection range:
0.14 – 2.5 mm² solid / fine standed

400 V/4 kV/3 – Overvoltage category III
690 V/4 kV/2 – Overvoltage category II
1000 V/4 kV/1 – Overvoltage category I

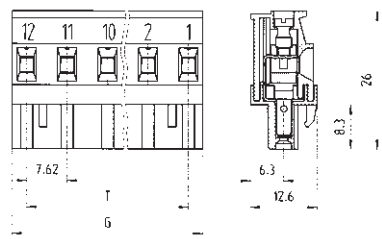

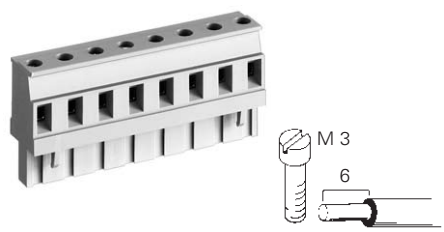

Type 8413 B/... VR
vertical right plug, 90° to wire entry

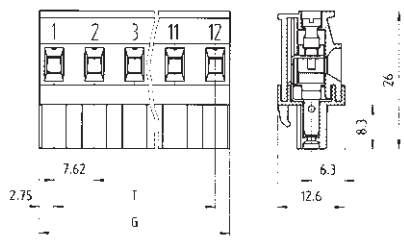

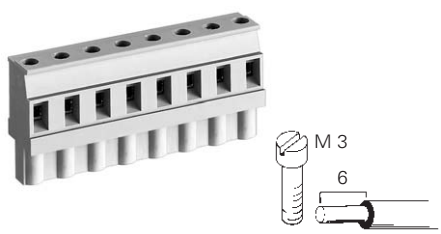

Type 8413 B/... VL
vertical left plug, 90° to wire entry

Rated voltages: VDE 0110					
UL ratings	No. 22 – 12 AWG	300 V	15 A	No. 22 – 12 AWG	300 V	15 A
CSA ratings	No. 22 – 12 AWG	300 V	15 A	No. 22 – 14 AWG	300 V	15 A
Approvals					

Std. pack	G	T	Poles	Part no.	Part no.	Part no.	Part no.
Spacing: 7.62 mm		Type 8413		unmarked	marked	unmarked	marked
a 100	13.12	7.62	2	25.385.2253.0	25.385.0253.0	25.386.2253.0	25.386.0253.0
100	20.74	15.24	3	25.385.2353.0	25.385.0353.0	25.386.2353.0	25.386.0353.0
50	28.36	22.86	4	25.385.2453.0	25.385.0453.0	25.386.2453.0	25.386.0453.0
50	35.98	30.48	5	25.385.2553.0	25.385.0553.0	25.386.2553.0	25.386.0553.0
50	43.60	38.10	6	25.385.2653.0	25.385.0653.0	25.386.2653.0	25.386.0653.0
50	51.22	45.72	7	25.385.2753.0	25.385.0753.0	25.386.2753.0	25.386.0753.0
50	58.84	53.34	8	25.385.2853.0	25.385.0853.0	25.386.2853.0	25.386.0853.0
50	66.46	60.96	9	25.385.2953.0	25.385.0953.0	25.386.2953.0	25.386.0953.0
50	74.08	68.58	10	25.385.3053.0	25.385.1053.0	25.386.3053.0	25.386.1053.0
50	81.70	76.20	11	25.385.3153.0	25.385.1153.0	25.386.3153.0	25.386.1153.0
50	89.32	83.82	12	25.385.3253.0	25.385.1253.0	25.386.3253.0	25.386.1253.0
Accessories:							
Coding piece (strip)	100			05.561.9153.0		05.561.9153.0	

Crimp connection

wiecon

Rated cross section:
1.0 or 2.5 mm²

Rated current:
10 A with a 1.0 mm² wire and 0.5 – 1.0 mm² contacts

12 A with a 2.5 mm² wire and 1.5 – 2.5 mm² contacts

Contacts for connection range:
0.5 – 1.0 mm² fine stranded
(insulation diameter 1.4 – 2.3 mm)

Connection range:
0.5 – 1.0 mm² fine stranded
(insulation diameter 1.4 – 3.1 mm)

250 V/4 kV/3 – Overvoltage category III
400 V/4 kV/2 – Overvoltage category II
1000 V/4 kV/1 – Overvoltage category I

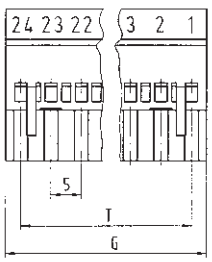

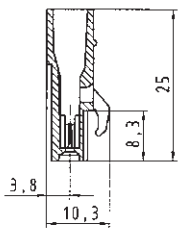

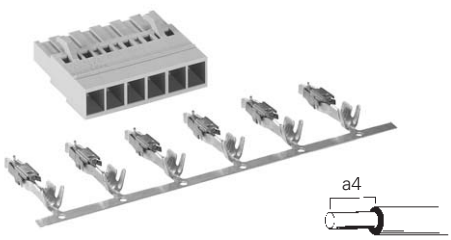

Type 8113 BK

Rated voltages: VDE 0110
UL ratings — No. 22 – 12 AWG — 300 V — 15 A
CSA ratings
Approvals — pending

Std. pack	G	T	Poles	Part no. unmarked	Part no. marked	Part no.	Part no.
Spacing: 5.00 mm							
100	10	5	2	01.060.3253.0	01.060.0253.0		
100	15	10	3	01.060.3353.0	01.060.0353.0		
50	20	15	4	01.060.3453.0	01.060.0453.0		
50	25	20	5	01.060.3553.0	01.060.0553.0		
50	30	25	6	01.060.3653.0	01.060.0653.0		
50	35	30	7	01.060.3753.0	01.060.0753.0		
50	40	35	8	01.060.3853.0	01.060.0853.0		
50	45	40	9	01.060.3953.0	01.060.0953.0		
50	50	45	10	01.060.4053.0	01.060.1053.0		
50	55	50	11	01.060.4153.0	01.060.1153.0		
50	60	55	12	01.060.4253.0	01.060.1253.0		
50	65	60	13	01.060.4353.0	01.060.1353.0		
50	70	65	14	01.060.4453.0	01.060.1453.0		
50	75	70	15	01.060.4553.0	01.060.1553.0		
50	80	75	16	01.060.4653.0	01.060.1653.0		
				17 to 24pole upon request			
Accessories:							
Crimp contacts							
Single contacts	500	0.5 – 1.0 mm²	20-18 AWG	02.125.1629.0			
Single contacts	500	1.5 – 2.5 mm²	16-14 AWG	02.125.1729.0			
Reel contacts	4000	0.5 – 1.0 mm²	20-18 AWG	02.125.1600.0			
Reel contacts	3500	1.5 – 2.5 mm²	16-14 AWG	02.125.1700.0			
Crimping tool:							
Crimping tool				95.101.0800.0			
Crimp dies				05.502.2500.0			

PC board connectors, spring clamp connection spacings 5.00/5.08 mm

wiecon PCB

Rated cross section*:
2.5 mm²

Rated current:
12 A

Connection range:
0.14 – 2.5 mm² solid / fine standed

250 V/4 kV/3 – Overvoltage category III
400 V/4 kV/2 – Overvoltage category II
1000 V/4 kV/1 – Overvoltage category I

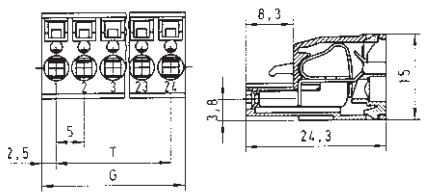

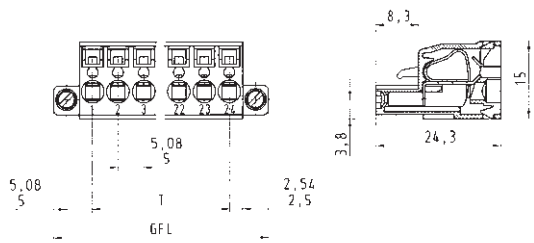

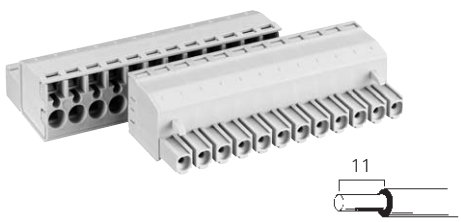

Type 8113/8213 BFK

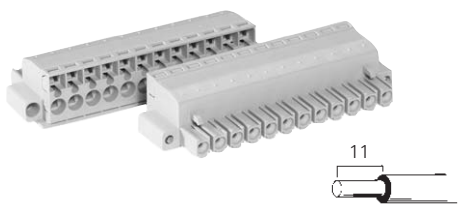

Type 8113/8213 BFK .../F

* When using ferrules for conductor cross section of 2.5 mm, use only ferrule no. 05.596.6127.0.

Rated voltages: VDE 0110						
UL ratings	No. 22 – 12 AWG	300 V	12 A	No. 22 – 12 AWG	300 V	12 A
CSA ratings	No. 22 – 12 AWG	300 V	12 A	No. 22 – 12 AWG	300 V	12 A
Approvals						

Std. pack	GFL	G	T	Poles	Part no. unmarked	Part no. marked	Part no. unmarked	Part no. marked
Spacing: 5.00 mm								
100	22.54	10	5	2	25.820.3253.0	25.820.0253.0	25.821.3253.0	25.821.0253.0
100	27.54	15	10	3	25.820.3353.0	25.820.0353.0	25.821.3353.0	25.821.0353.0
50	32.54	20	15	4	25.820.3453.0	25.820.0453.0	25.821.3453.0	25.821.0453.0
50	37.54	25	20	5	25.820.3553.0	25.820.0553.0	25.821.3553.0	25.821.0553.0
50	42.54	30	25	6	25.820.3653.0	25.820.0653.0	25.821.3653.0	25.821.0653.0
50	47.54	35	30	7	25.820.3753.0	25.820.0753.0	25.821.3753.0	25.821.0753.0
50	52.54	40	35	8	25.820.3853.0	25.820.0853.0	25.821.3853.0	25.821.0853.0
50	57.54	45	40	9	25.820.3953.0	25.820.0953.0	25.821.3953.0	25.821.0953.0
50	62.54	50	45	10	25.820.4053.0	25.820.1053.0	25.821.4053.0	25.821.1053.0
50	67.54	55	50	11	25.820.4153.0	25.820.1153.0	25.821.4153.0	25.821.1153.0
50	72.54	60	55	12	25.820.4253.0	25.820.1253.0	25.821.4253.0	25.821.1253.0
50	77.54	65	60	13	25.820.4353.0	25.820.1353.0	25.821.4353.0	25.821.1353.0
50	82.54	70	65	14	25.820.4453.0	25.820.1453.0	25.821.4453.0	25.821.1453.0
50	87.54	75	70	15	25.820.4553.0	25.820.1553.0	25.821.4553.0	25.821.1553.0
50	92.54	80	75	16	25.820.4653.0	25.820.1653.0	25.821.4653.0	25.821.1653.0
					17 to 24pole upon request		17 to 24pole upon request	
Spacing: 5.08 mm					unmarked	marked	unmarked	marked
100	22.70	10.16	5.08	2	25.840.3253.0	25.840.0253.0	25.841.3253.0	25.841.0253.0
100	27.78	15.24	10.16	3	25.840.3353.0	25.840.0353.0	25.841.3353.0	25.841.0353.0
50	32.86	20.32	15.24	4	25.840.3453.0	25.840.0453.0	25.841.3453.0	25.841.0453.0
50	37.94	25.40	20.32	5	25.840.3553.0	25.840.0553.0	25.841.3553.0	25.841.0553.0
50	43.02	30.48	25.40	6	25.840.3653.0	25.840.0653.0	25.841.3653.0	25.841.0653.0
50	48.10	35.56	30.48	7	25.840.3753.0	25.840.0753.0	25.841.3753.0	25.841.0753.0
50	53.18	40.64	35.56	8	25.840.3853.0	25.840.0853.0	25.841.3853.0	25.841.0853.0
50	58.26	45.72	40.64	9	25.840.3953.0	25.840.0953.0	25.841.3953.0	25.841.0953.0
50	63.34	50.80	45.72	10	25.840.4053.0	25.840.1053.0	25.841.4053.0	25.841.1053.0
50	68.42	55.88	50.80	11	25.840.4153.0	25.840.1153.0	25.841.4153.0	25.841.1153.0
50	73.50	60.96	55.88	12	25.840.4253.0	25.840.1253.0	25.841.4253.0	25.841.1253.0
50	78.58	66.04	60.96	13	25.840.4353.0	25.840.1353.0	25.841.4353.0	25.841.1353.0
50	83.66	71.12	66.04	14	25.840.4453.0	25.840.1453.0	25.841.4453.0	25.841.1453.0
50	88.74	76.20	71.12	15	25.840.4553.0	25.840.1553.0	25.841.4553.0	25.841.1553.0
50	93.82	81.28	76.20	16	25.840.4653.0	25.840.1653.0	25.841.4653.0	25.841.1653.0
					17 to 24pole upon request		17 to 24pole upon request	

PC board connectors, spring clamp connection
Spacings: 5.08 mm

codable

2.5 mm²

Rated cross section*:
2.5 mm²

Rated current:
12 A

Connection range:
0,14 – 2.5 mm² solid / fine stranded

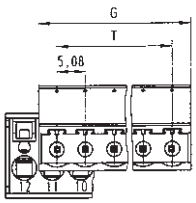

250 V/4 kV/3 – Overvoltage category III
400 V/4 kV/2 – Overvoltage category II
1000 V/4 kV/1 – Overvoltage category I

* When using ferrules for conductor cross section of 2.5 mm, use only ferrule no. 05.596.6127.0.

Type 8213 SUFK

Rated voltages: VDE 0110			
UL ratings	No. 22 – 12 AWG	300 V	12 A
CSA ratings	No. 22 – 12 AWG	300 V	12 A
Approvals available soon			

Std. pack	G	T	Poles	Part no. unmarked	Part no. marked
Spacing: 5.08 mm					
100	10.16	5.08	2	25.857.3253.0	25.857.0253.0
100	15.24	10.16	3	25.857.3353.0	25.857.0353.0
50	20.32	15.24	4	25.857.3453.0	25.857.0453.0
50	25.40	20.32	5	25.857.3553.0	25.857.0553.0
50	30.48	25.40	6	25.857.3653.0	25.857.0653.0
50	35.56	30.48	7	25.857.3753.0	25.857.0753.0
50	40.64	35.56	8	25.857.3853.0	25.857.0853.0
50	45.72	40.64	9	25.857.3953.0	25.857.0953.0
50	50.80	45.72	10	25.857.4053.0	25.857.1053.0
50	55.88	50.80	11	25.857.4153.0	25.857.1153.0
50	60.96	55.88	12	25.857.4253.0	25.857.1253.0
50	66.04	60.96	13	25.857.4353.0	25.857.1353.0
50	71.12	66.04	14	25.857.4453.0	25.857.1453.0
50	76.20	71.12	15	25.857.4553.0	25.857.1553.0
50	81.28	76.20	16	25.857.4653.0	25.857.1653.0
17 to 24pole upon request					
Accessories:					
Coding piece (strip)	100			05.561.9153.0	
Screwdriver DIN 5264 A 0.6 x 3.5	5			06.502.4000.0	

PC board connectors, spring clamp connection
Spacing: 7.62 mm

wiecon PCB

Rated cross section*:
2.5 mm²

Rated current:
12 A

Connection range:
0.14 – 2.5 mm² solid / fine standed

400 V/6 kV/3– Overvoltage category III
** 690 V/6 kV/2 – Overvoltage category II
1000 V/6 kV/1 – Overvoltage category I

* When using ferrules for conductor cross section of 2.5 mm, use only ferrule no. 05.596.6127.0.

** max. 600 V for ungrounded networks or expected overvoltage ≤ 3 kV for L ≥ 2.00 mm and ≤ 2.5 kV for 2.0 mm > L ≥ 1.5 mm

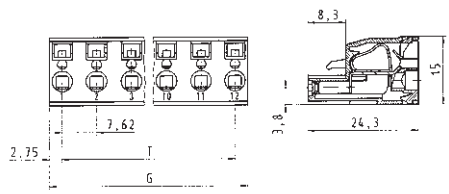

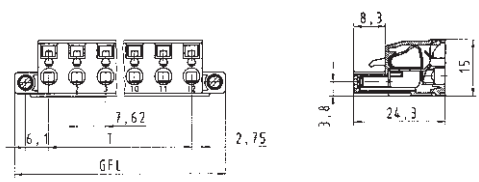

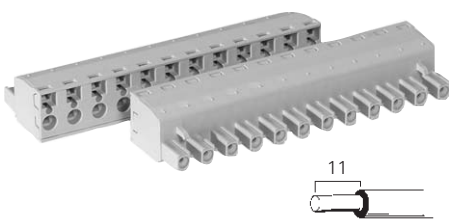

Type 8413 BFK

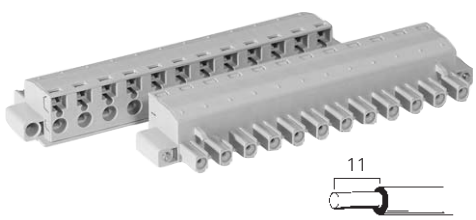

Type 8413 BFK/... F

VDE 0110								
UL ratings					No. 22 – 12 AWG	300 V	12 A	No. 22 – 12 AWG	300 V	12 A
CSA ratings					No. 22 – 12 AWG	300 V	12 A	No. 22 – 12 AWG	300 V	12 A
Approvals								

Std. pack	GFL	G	T	Poles	Part no.	Part no.	Part no.	Part no.
Spacing: 7.62 mm					unmarked	marked	unmarked	marked
100	25.66	13.12	7.62	2	25.880.3253.0	25.880.0253.0	25.881.3253.0	25.881.0253.0
100	33.28	20.74	15.24	3	25.880.3353.0	25.880.0353.0	25.881.3353.0	25.881.0353.0
50	40.90	28.36	22.86	4	25.880.3453.0	25.880.0453.0	25.881.3453.0	25.881.0453.0
50	48.52	35.98	30.48	5	25.880.3553.0	25.880.0553.0	25.881.3553.0	25.881.0553.0
50	56.14	43.60	38.10	6	25.880.3653.0	25.880.0653.0	25.881.3653.0	25.881.0653.0
50	63.76	51.22	45.72	7	25.880.3753.0	25.880.0753.0	25.881.3753.0	25.881.0753.0
50	71.38	58.84	53.34	8	25.880.3853.0	25.880.0853.0	25.881.3853.0	25.881.0853.0
50	79.00	66.46	60.96	9	25.880.3953.0	25.880.0953.0	25.881.3953.0	25.881.0953.0
50	86.62	74.08	68.58	10	25.880.4053.0	25.880.1053.0	25.881.4053.0	25.881.1053.0
50	94.24	81.70	76.20	11	25.880.4153.0	25.880.1153.0	25.881.4153.0	25.881.1153.0
50	101.86	89.32	83.82	12	25.880.4253.0	25.880.1253.0	25.881.4253.0	25.881.1253.0

PC board connector, inverted plug / solder version
Spacing: 5.08 mm

codable

Rated current:
12 A

250 V/4 kV/3 – Overvoltage category III
*690 V/4 kV/2 – Overvoltage category II
1000 V/4 kV/1 – Overvoltage category I

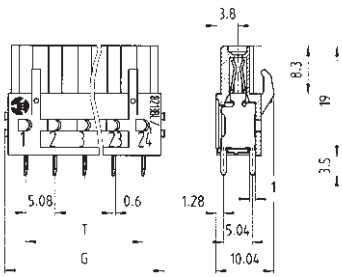

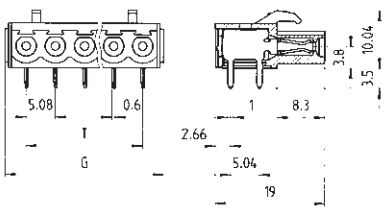

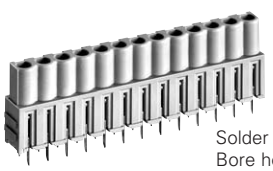

Solder pin 0.6 x 1 mm
Bore hole Ø 1.2 mm

Solder pin 0.6 x 1 mm
Bore hole Ø 1.2 mm

* max. 600 V for ungrounded networks or expected overvoltage ≤ 3 kV for L ≥ 2.00 mm and ≤ 2.5 kV for 2.0 mm > L ≥ 1.5 mm

	Type 8213 BL/... G plug-in vertical to PC board		Type 8213 BL/... W plug-in horizontal to PC board	
Rated voltages: VDE 0110				
UL ratings	300 V	15 A	300 V	15 A
CSA ratings	300 V	15 A	300 V	15 A
Approvals				

Std. pack	G	T	Poles	Part no.	Part no.	Part no.	Part no.
Spacing: 5.08 mm				unmarked	marked	unmarked	marked
100	12.36	5.08	2	25.342.3253.0	25.342.0253.0	25.343.3253.0	25.343.0253.0
100	17.44	10.16	3	25.342.3353.0	25.342.0353.0	25.343.3353.0	25.343.0353.0
50	22.52	15.24	4	25.342.3453.0	25.342.0453.0	25.343.3453.0	25.343.0453.0
50	27.60	20.32	5	25.342.3553.0	25.342.0553.0	25.343.3553.0	25.343.0553.0
50	32.68	25.40	6	25.342.3653.0	25.342.0653.0	25.343.3653.0	25.343.0653.0
50	37.76	30.48	7	25.342.3753.0	25.342.0753.0	25.343.3753.0	25.343.0753.0
50	42.84	35.56	8	25.342.3853.0	25.342.0853.0	25.343.3853.0	25.343.0853.0
50	47.92	40.64	9	25.342.3953.0	25.342.0953.0	25.343.3953.0	25.343.0953.0
50	53.00	45.72	10	25.342.4053.0	25.342.1053.0	25.343.4053.0	25.343.1053.0
50	58.08	50.80	11	25.342.4153.0	25.342.1153.0	25.343.4153.0	25.343.1153.0
50	63.16	55.88	12	25.342.4253.0	25.342.1253.0	25.343.4253.0	25.343.1253.0
50	68.24	60.96	13	25.342.4353.0	25.342.1353.0	25.343.4353.0	25.343.1353.0
50	73.32	66.04	14	25.342.4453.0	25.342.1453.0	25.343.4453.0	25.343.1453.0
50	78.40	71.12	15	25.342.4553.0	25.342.1553.0	25.343.4553.0	25.343.1553.0
50	83.48	76.20	16	25.342.4653.0	25.342.1653.0	25.343.4653.0	25.343.1653.0
	17 to 24pole upon request						
Accessories:							
Coding piece (strip)	100			05.561.9153.0		05.561.9153.0	
Fixing device	100			Z5.523.7853.0		Z5.523.7753.0	

PC board connectors, pluggable
Spacings: 5.00/5.08 mm

wiecon PCB

Rated cross section:
2.5 mm²

Rated current:
12 A, feed through current 2.2 mA per LED

Rated voltages:
Type 8113 B/... TOP, 8213 B/... TOP
250 V/4 kV/3 – Overvoltage category III
400 V/4 kV/2 – Overvoltage category II
1000 V/4 kV/1 – Overvoltage category I

Type 8113 B/... TOP LED
24 V/4 kV/3 – Overvoltage category III
24 V/4 kV/2 – Overvoltage category II
24 V/4 kV/1 – Overvoltage category I

Connection range:
0.14 – 2.5 mm² solid / fine standed

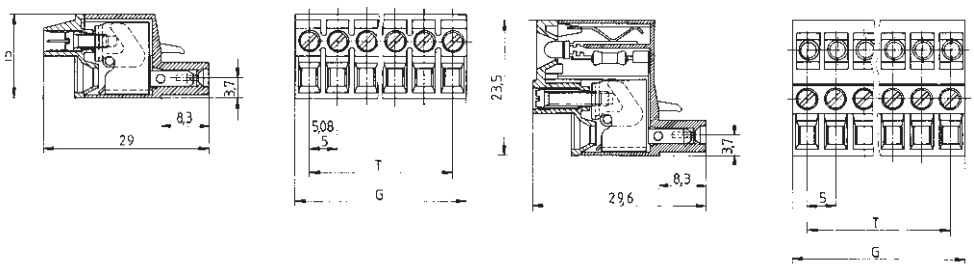

TOP connection LED with common negative pole

Type 8113 B/... TOP, 8213 B/... TOP
plug-in 180° to wire entry

Type 8113 B/... TOP LED
plug-in 180° to wire entry

Rated voltages: VDE 0110					
UL ratings	No. 22 – 12 AWG	300 V	15 A	No. 22 – 12 AWG	24 V	15 A
CSA ratings	No. 22 – 12 AWG	300 V	15 A	No. 22 – 12 AWG	24 V	15 A
Approvals					

Std. pack	TOP	G	T	Poles	Part no.	Part no.	Part no.	Part no.
Spacing: 5.00 mm					unmarked	marked	unmarked	marked
100	250	10	5	2	25.220.3253.0	25.220.0253.0	25.230.3253.0	25.230.0253.0
100	250	15	10	3	25.220.3353.0	25.220.0353.0	25.230.3353.0	25.230.0353.0
50	200	20	15	4	25.220.3453.0	25.220.0453.0	25.230.3453.0	25.230.0453.0
50	200	25	20	5	25.220.3553.0	25.220.0553.0	25.230.3553.0	25.230.0553.0
50	200	30	25	6	25.220.3653.0	25.220.0653.0	25.230.3653.0	25.230.0653.0
50	100	35	30	7	25.220.3753.0	25.220.0753.0	25.230.3753.0	25.230.0753.0
50	100	40	35	8	25.220.3853.0	25.220.0853.0	25.230.3853.0	25.230.0853.0
50	100	45	40	9	25.220.3953.0	25.220.0953.0	25.230.3953.0	25.230.0953.0
50	100	50	45	10	25.220.4053.0	25.220.1053.0	25.230.4053.0	25.230.1053.0
50	100	55	50	11	25.220.4153.0	25.220.1153.0	25.230.4153.0	25.230.1153.0
50	100	60	55	12	25.220.4253.0	25.220.1253.0	25.230.4253.0	25.230.1253.0
50	50	65	60	13	25.220.4353.0	25.220.1353.0	25.230.4353.0	25.230.1353.0
50	50	70	65	14	25.220.4453.0	25.220.1453.0	25.230.4453.0	25.230.1453.0
50	50	75	70	15	25.220.4553.0	25.220.1553.0	25.230.4553.0	25.230.1553.0
50	50	80	75	16	25.220.4653.0	25.220.1653.0	25.230.4653.0	25.230.1653.0
		117 to 24pole upon request						
Spacing: 5.08 mm					unmarked	marked		
100	250	10.16	5.08	2	25.240.3253.0	25.240.0253.0		
100	250	15.24	10.16	3	25.240.3353.0	25.240.0353.0		
50	200	20.32	15.24	4	25.240.3453.0	25.240.0453.0		
50	200	25.40	20.32	5	25.240.3553.0	25.240.0553.0		
50	200	30.48	25.40	6	25.240.3653.0	25.240.0653.0		
50	100	35.56	30.48	7	25.240.3753.0	25.240.0753.0		
50	100	40.64	35.56	8	25.240.3853.0	25.240.0853.0		
50	100	45.72	40.64	9	25.240.3953.0	25.240.0953.0		
50	100	50.80	45.72	10	25.240.4053.0	25.240.1053.0		
50	100	55.88	50.80	11	25.240.4153.0	25.240.1153.0		
50	100	60.96	55.88	12	25.240.4253.0	25.240.1253.0		
50	50	66.04	60.96	13	25.240.4353.0	25.240.1353.0		
50	50	71.12	66.04	14	25.240.4453.0	25.240.1453.0		
50	50	76.20	71.12	15	25.240.4553.0	25.240.1553.0		
50	50	81.28	76.20	16	25.240.4653.0	25.240.1653.0		
		17 to 24pole upon request						

Insulated headers for PC boards
Spacings: 5.00/5.08 mm

codable

Rated current:
12 A

250 V/4 kV/3 – Overvoltage category III
400 V/4 kV/2 – Overvoltage category II
1000 V/4 kV/1 – Overvoltage category I

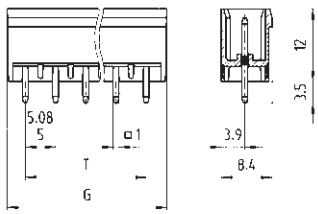

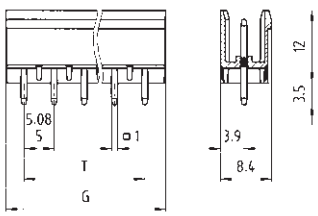

Solder pin 1 x 1 mm
Bore hole Ø 1.4 mm

closed version

Type 8113 S/... G, 8213 S/... G
vertical mount

Solder pin 1 x 1 mm
Bore hole Ø 1.4 mm

open version

Type 8113 S/... GOF, 8213 S/... GOF
vertical mount

Rated voltages: VDE 0110									
UL ratings					300 V	15 A		300 V	15 A
CSA ratings					300 V	15 A		300 V	15 A
Approvals									
Std. pack	G	T	Poles	Part no.	Part no.	G	T	Part no.	
Spacing: 5.00 mm				unmarked				unmarked	
100	10.16	5	2	25.330.3253.0		10	5	99.202.9996.0	
100	15.24	10	3	25.330.3353.0		15	10	99.203.9996.0	
50	20.32	15	4	25.330.3453.0		20	15	99.204.9996.0	
50	25.40	20	5	25.330.3553.0		25	20	99.205.9996.0	
50	30.48	25	6	25.330.3653.0		30	25	99.206.9996.0	
50	35.56	30	7	25.330.3753.0		35	30	99.207.9996.0	
50	40.64	35	8	25.330.3853.0		40	35	99.208.9996.0	
50	45.72	40	9	25.330.3953.0		45	40	99.209.9996.0	
50	50.80	45	10	25.330.4053.0		50	45	99.210.9996.0	
50	55.88	50	11	25.330.4153.0		55	50	99.211.9996.0	
50	60.96	55	12	25.330.4253.0		60	55	99.212.9996.0	
50	66.04	60	13	25.330.4353.0		65	60	99.213.9996.0	
50	71.12	65	14	25.330.4453.0		70	65	99.214.9996.0	
50	76.20	70	15	25.330.4553.0		75	70	99.215.9996.0	
50	81.28	75	16	25.330.4653.0		80	75	99.216.9996.0	
17 to 24pole upon request								17 to 24pole upon request	
Spacing: 5.08 mm				unmarked				unmarked	
100	11.56	5.08	2	25.350.3253.0		10.16	5,08	99.232.9996.1	
100	16.64	10.16	3	25.350.3353.0		15.24	10,16	99.233.9996.1	
50	21.72	15.24	4	25.350.3453.0		20.32	15,24	99.234.9996.1	
50	26.80	20.32	5	25.350.3553.0		25.40	20,32	99.235.9996.1	
50	31.88	25.40	6	25.350.3653.0		30.48	25,40	99.236.9996.1	
50	36.96	30.48	7	25.350.3753.0		35.56	30,48	99.237.9996.1	
50	42.04	35.56	8	25.350.3853.0		40.64	35,56	99.238.9996.1	
50	47.12	40.64	9	25.350.3953.0		45.72	40,64	99.239.9996.1	
50	52.20	45.72	10	25.350.4053.0		50.80	45,72	99.240.9996.1	
50	57.28	50.80	11	25.350.4153.0		55.88	50,80	99.241.9996.1	
50	62.36	55.88	12	25.350.4253.0		60.96	55,88	99.242.9996.1	
50	67.44	60.96	13	25.350.4353.0		66.04	60,96	99.243.9996.1	
50	72.52	66.04	14	25.350.4453.0		70.12	66,04	99.244.9996.1	
50	77.60	71.12	15	25.350.4553.0		75.20	71,12	99.245.9996.1	
50	82.68	76.20	16	25.350.4653.0		80.28	76,20	99.246.9996.1	
17 to 24pole upon request								17 to 24pole upon request	
Accessories:									
Coding piece (strip)	100			05.561.0053.0		05.561.0053.0			
Fixing device assembly - for screw flanges on both sides of the header	100			Z5.523.2453.0					

Insulated headers for PC boards
Spacings: 5.00/5.08 mm

wiecon PCB

codable

Rated current:
12 A

Rated voltages:
250 V/4 kV/3 – Overvoltage category III
400 V/4 kV/2 – Overvoltage category II
1000 V/4 kV/1 – Overvoltage category I

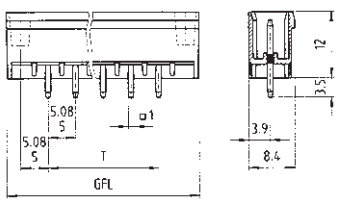

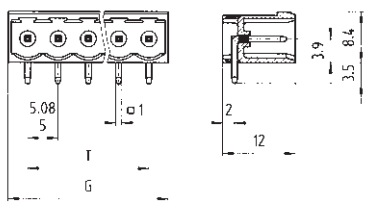

Solder pin 1 x 1 mm
Bore hole Ø 1.4 mm

with screw flange

Type 8113 S/... GF, 8213 S/... GF
vertical mount

Solder pin 1 x 1 mm
Bore hole Ø 1.4 mm

closed version

Type 8113 S/... W, 8213 S/... W
horizontal mount

Rated voltages: VDE 0110								
UL ratings				300 V	15 A		300 V	15 A
CSA ratings				300 V	15 A		300 V	15 A
Approvals								

Std. pack	G	T	Poles	Part no.	Part no.	GFL	T	Part no.
Spacing: 5.00 mm				unmarked				unmarked
100	11.40	5	2	25.338.3253.0		20	5	25.332.3253.0
100	16.40	10	3	25.338.3353.0		25	10	25.332.3353.0
50	21.40	15	4	25.338.3453.0		30	15	25.332.3453.0
50	26.40	20	5	25.338.3553.0		35	20	25.332.3553.0
50	31.40	25	6	25.338.3653.0		40	25	25.332.3653.0
50	36.40	30	7	25.338.3753.0		45	30	25.332.3753.0
50	41.40	35	8	25.338.3853.0		50	35	25.332.3853.0
50	46.40	40	9	25.338.3953.0		55	40	25.332.3953.0
50	51.40	45	10	25.338.4053.0		60	45	25.332.4053.0
50	56.40	50	11	25.338.4153.0		65	50	25.332.4153.0
50	61.40	55	12	25.338.4253.0		70	55	25.332.4253.0
50	66.40	60	13	25.338.4353.0		75	60	25.332.4353.0
50	71.40	65	14	25.338.4453.0		80	65	25.332.4453.0
50	76.40	70	15	25.338.4553.0		85	70	25.332.4553.0
50	81.40	75	16	25.338.4653.0		90	75	25.332.4653.0
				17 to 22pole upon request				17 to 24pole upon request
Spacing: 5.08 mm				unmarked				unmarked
100	11.56	5.08	2	25.359.3253.0		20.32	5,08	25.352.3253.0
100	16.64	10.16	3	25.359.3353.0		25.40	10,16	25.352.3353.0
50	21.72	15.24	4	25.359.3453.0		30.48	15,24	25.352.3453.0
50	26.80	20.32	5	25.359.3553.0		35.56	20,32	25.352.3553.0
50	31.88	25.40	6	25.359.3653.0		40.64	25,40	25.352.3653.0
50	36.96	30.48	7	25.359.3753.0		45.72	30,48	25.352.3753.0
50	42.04	35.56	8	25.359.3853.0		50.80	35,56	25.352.3853.0
50	47.12	40.64	9	25.359.3953.0		55.88	40,64	25.352.3953.0
50	52.20	45.72	10	25.359.4053.0		60.96	45,72	25.352.4053.0
50	57.28	50.80	11	25.359.4153.0		66.04	50,80	25.352.4153.0
50	62.36	55.88	12	25.359.4253.0		71.12	55,88	25.352.4253.0
50	67.44	60.96	13	25.359.4353.0		76.20	60,96	25.352.4353.0
50	72.52	66.04	14	25.359.4453.0		81.28	66,04	25.352.4453.0
50	77.60	71.12	15	25.359.4553.0		86.36	71,12	25.352.4553.0
50	82.68	76.20	16	25.359.4653.0		91.44	76,20	25.352.4653.0
				17 to 22pole upon request				17 to 24pole upon request
Accessories:								
Coding piece (strip)	100			05.561.0053.0		05.561.0053.0		
Fixing device assembly - for screw flanges on both sides of the header	100			Z5.523.2453.0		Z5.523.2453.0		

Insulated headers for PC boards
Spacings: 5.00/5.08 mm

codable

Rated current:
12 A

250 V/4 kV/3 – Overvoltage category III
400 V/4 kV/2 – Overvoltage category II
1000 V/4 kV/1 – Overvoltage category I

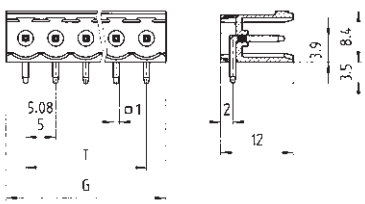

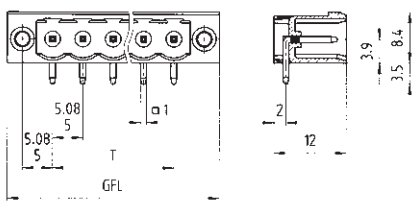

Solder pin 1 x 1 mm
Bore hole Ø 1.4 mm

open version

Type 8113 S/... WOF, 8213 S/... WOF
horizontal mount

Solder pin 1 x 1 mm
Bore hole Ø 1.4 mm

with screw flange

Type 8113 S/... WF, 8213 S/... WF
horizontal mount

Rated voltages: VDE 0110									
UL ratings				300 V	15 A			300 V	15 A
CSA ratings				300 V	15 A			300 V	15 A
Approvals									
Std. pack	G	T	Poles	Part no.	Part no.	GFL	G	T	Part no.
Spacing: 5.00 mm				unmarked					unmarked
100	11.40	5	2	99.262.9996.0		20	10	5	25.339.3253.0
100	16.40	10	3	99.263.9996.0		25	15	10	25.339.3353.0
50	21.40	15	4	99.264.9996.0		30	20	15	25.339.3453.0
50	26.40	20	5	99.265.9996.0		35	25	20	25.339.3553.0
50	31.40	25	6	99.266.9996.0		40	30	25	25.339.3653.0
50	36.40	30	7	99.267.9996.0		45	35	30	25.339.3753.0
50	41.40	35	8	99.268.9996.0		50	40	35	25.339.3853.0
50	46.40	40	9	99.269.9996.0		55	45	40	25.339.3953.0
50	51.40	45	10	99.270.9996.0		60	50	45	25.339.4053.0
50	56.40	50	11	99.271.9996.0		65	55	50	25.339.4153.0
50	61.40	55	12	99.272.9996.0		70	60	55	25.339.4253.0
50	66.40	60	13	99.273.9996.0		75	65	60	25.339.4353.0
50	71.40	65	14	99.274.9996.0		80	70	65	25.339.4453.0
50	76.40	70	15	99.275.9996.0		85	75	70	25.339.4553.0
50	81.40	75	16	99.276.9996.0		90	80	75	25.339.4653.0
17 to 24pole upon request									17 to 22pole upon request
Spacing: 5.08 mm				unmarked					unmarked
100	11.56	5.08	2	99.202.9996.2		20.32	10.16	5.08	25.358.3253.0
100	16.64	10.16	3	99.203.9996.2		25.40	15.24	10.16	25.358.3353.0
50	21.72	15.24	4	99.204.9996.2		30.48	20.32	15.24	25.358.3453.0
50	26.80	20.32	5	99.205.9996.2		35.56	25.40	20.32	25.358.3553.0
50	31.88	25.40	6	99.206.9996.2		40.64	30.48	25.40	25.358.3653.0
50	36.96	30.48	7	99.207.9996.2		45.72	35.56	30.48	25.358.3753.0
50	42.04	35.56	8	99.208.9996.2		50.80	40.64	35.56	25.358.3853.0
50	47.12	40.64	9	99.209.9996.2		55.88	45.72	40.64	25.358.3953.0
50	52.20	45.72	10	99.210.9996.2		60.96	50.80	45.72	25.358.4053.0
50	57.28	50.80	11	99.211.9996.2		66.04	55.88	50.80	25.358.4153.0
50	62.36	55.88	12	99.212.9996.2		71.12	60.96	55.88	25.358.4253.0
50	67.44	60.96	13	99.213.9996.2		76.20	66.04	60.96	25.358.4353.0
50	72.52	66.04	14	99.214.9996.2		81.28	71.12	66.04	25.358.4453.0
50	77.60	71.12	15	99.215.9996.2		86.36	76.20	71.12	25.358.4553.0
50	82.68	76.20	16	99.216.9996.2		91.44	81.28	76.20	25.358.4653.0
17 to 24pole upon request									17 to 22pole upon request
Accessories:									
Coding piece (strip)	100			05.561.0053.0		05.561.0053.0			
Fixing device assembly - for screw flanges on both sides of the header	100			Z5.523.2453.0					

Insulated headers for PC boards
Spacings: 7.50/7.62 mm

wiecon PCB

codable

Rated current:
12 A

250 V/4 kV/3 – Overvoltage category III
400 V/4 kV/2 – Overvoltage category II
1000 V/4 kV/1 – Overvoltage category I

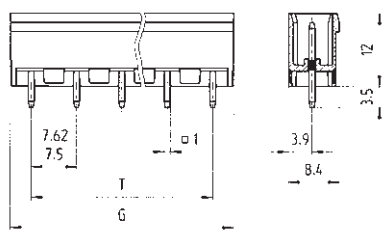

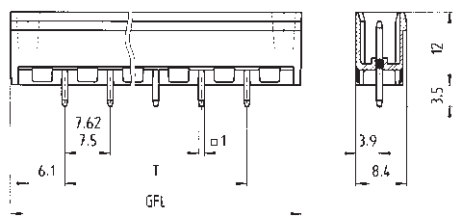

Solder pin 1 x 1 mm
Bore hole Ø 1.4 mm

closed version

Type 8313 S/... G, 8413 S/... G
vertical mount

Solder pin 1 x 1 mm
Bore hole Ø 1.4 mm

with screw flange

Type 8313 S/... GF, 8413 S/... GF
vertical mount

Rated voltages: VDE 0110								
UL ratings					300 V	15 A	300 V	15 A
CSA ratings					300 V	15 A	300 V	15 A
Approvals								
Std. pack	G	T	Poles	Part no.	Part no.	GFL	T	Part no.
Spacing: 7.50 mm				unmarked				unmarked
100	14.20	7.50	2	25.370.3253.0		25.54	7,50	25.374.6253.0
100	21.70	15.00	3	25.370.3353.0		33.04	15,00	25.374.6353.0
50	29.20	22.50	4	25.370.3453.0		40.54	22,50	25.374.6453.0
50	36.70	30.00	5	25.370.3553.0		48.04	30,00	25.374.6553.0
50	44.20	37.50	6	25.370.3653.0		55.54	37,50	25.374.6653.0
50	51.70	45.00	7	25.370.3753.0		63.04	45,00	25.374.6753.0
50	59.20	52.50	8	25.370.3853.0		70.54	52,50	25.374.6853.0
50	66.70	60.00	9	25.370.3953.0		78.04	60,00	25.374.6953.0
50	74.20	67.50	10	25.370.4053.0		85.54	67,50	25.374.7053.0
50	81.70	75.00	11	25.370.4153.0		93.04	75,00	25.374.7153.0
50	89.20	82.50	12	25.370.4253.0		100.54	82,50	25.374.7253.0
Spacing: 7.62 mm				unmarked				unmarked
100	14.32	7.62	2	25.390.3253.0		25.66	7,62	25.398.6253.0
100	21.94	15.24	3	25.390.3353.0		33.25	15,24	25.398.6353.0
50	29.56	22.86	4	25.390.3453.0		40.90	22,86	25.398.6453.0
50	37.18	30.48	5	25.390.3553.0		48.52	30,48	25.398.6553.0
50	44.80	38.10	6	25.390.3653.0		56.14	38,10	25.398.6653.0
50	52.42	45.72	7	25.390.3753.0		63.76	45,72	25.398.6753.0
50	60.04	53.34	8	25.390.3853.0		71.38	53,34	25.398.6853.0
50	67.66	60.64	9	25.390.3953.0		79.00	60,64	25.398.6953.0
50	75.28	68.58	10	25.390.4053.0		86.62	68,58	25.398.7053.0
50	82.90	76.20	11	25.390.4153.0		94.24	76,20	25.398.7153.0
50	90.52	83.82	12	25.390.4253.0		101.86	83,82	25.398.7253.0
Accessories:								
Coding piece (strip)	100			05.561.0053.0		05.561.0053.0		
Fixing device assembly - for screw flanges on both sides of the header	100			Z5.523.2453.0				

Insulated headers for PC boards
Spacings: 7.50/7.62 mm

codable

Rated current:
12 A

400 V/6 kV/3 – Overvoltage category III
690 V/6 kV/2 – Overvoltage category II
1000 V/6 kV/1 – Overvoltage category I

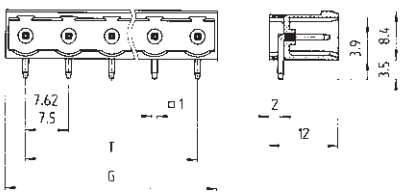

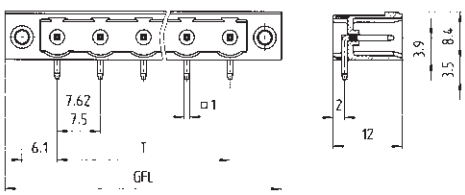

Solder pin 1 x 1 mm
Bore hole Ø 1.4 mm
closed version

Type 8313 S/... W, 8413 S/... W
horizontal mount

Solder pin 1 x 1 mm
Bore hole Ø 1.4 mm
with screw flange

Type 8313 S/... WF, 8413 S/... WF
horizontal mount

Rated voltages: VDE 0110		
UL ratings	300 V	15 A
CSA ratings	300 V	15 A
Approvals		

	Std. pack	G	T	Poles	Part no.	Part no.	GFL	T	Part no.
Spacing: 7.50 mm					unmarked				unmarked
	100	14.40	7.50	2	25.372.3253.0		25.54	7.50	25.374.2253.0
	100	21.90	15.00	3	25.372.3353.0		33.04	15.00	25.374.2353.0
	50	29.40	22.50	4	25.372.3453.0		40.54	22.50	25.374.2453.0
	50	36.90	30.00	5	25.372.3553.0		48.04	30.00	25.374.2553.0
	50	44.40	37.50	6	25.372.3653.0		55.54	37.50	25.374.2653.0
	50	51.90	45.00	7	25.372.3753.0		63.04	45.00	25.374.2753.0
	50	59.40	52.50	8	25.372.3853.0		70.54	52.50	25.374.2853.0
	50	66.90	60.00	9	25.372.3953.0		78.04	60.00	25.374.2953.0
	50	74.40	67.50	10	25.372.4053.0		85.54	67.50	25.374.3053.0
	50	81.90	75.00	11	25.372.4153.0		93.04	75.00	25.374.3153.0
	50	89.40	82.50	12	25.372.4253.0		100.54	82.50	25.374.3253.0
Spacing: 7.62 mm					unmarked				unmarked
	100	14.52	7.62	2	25.392.3253.0		25.66	7.62	25.398.2253.0
	100	22.14	15.24	3	25.392.3353.0		33.25	15.24	25.398.2353.0
	50	29.76	22.86	4	25.392.3453.0		40.90	22.86	25.398.2453.0
	50	37.38	30.48	5	25.392.3553.0		48.52	30.48	25.398.2553.0
	50	45.00	38.10	6	25.392.3653.0		56.14	38.10	25.398.2653.0
	50	52.62	45.72	7	25.392.3753.0		63.76	45.72	25.398.2753.0
	50	60.24	53.34	8	25.392.3853.0		71.38	53.34	25.398.2853.0
	50	67.86	60.64	9	25.392.3953.0		79.00	60.64	25.398.2953.0
	50	75.48	68.58	10	25.392.4053.0		86.62	68.58	25.398.3053.0
	50	83.10	76.20	11	25.392.4153.0		94.24	76.20	25.398.3153.0
	50	90.72	83.82	12	25.392.4253.0		101.86	83.82	25.398.3253.0
Accessories:									
Coding piece (strip)	100				05.561.0053.0		05.561.0053.0		
Fixing device assembly - for screw flanges on both sides of the header	100				Z5.523.2453.0				

Insulated headers for PC boards
Spacings: 5.00/5.08 mm

wiecon PCB

codable

Rated current:
12 A

250 V/4 kV/3 – Overvoltage category III
400 V/4 kV/2 – Overvoltage category II
1000 V/4 kV/1 – Overvoltage category I

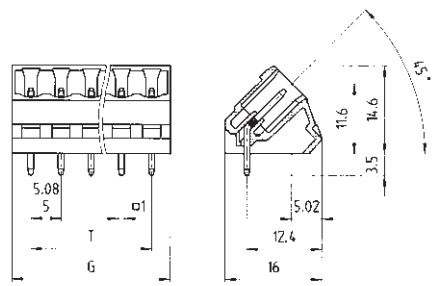

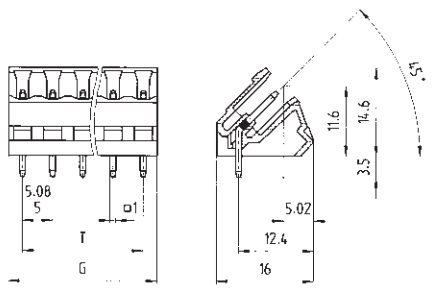

Solder pin 1 x 1 mm
Bore hole Ø 1.4 mm

closed version

Type 8113 S/... S, 8213 S/... S
plug-in 45° to PC board

Solder pin 1 x 1 mm
Bore hole Ø 1.4 mm

open version

Type 8113 S/... S1, 8213 S/... S1
plug-in 45° to PC board

Rated voltages: VDE 0110								
UL ratings				300 V	15 A		300 V	15 A
CSA ratings				300 V	15 A		300 V	15 A
Approvals								
Std. pack	G	T	Poles	Part no.	Part no.	G	T	Part no.
Spacing: 5.00 mm				unmarked				unmarked
100	11.20	5	2	25.394.3253.0		9.60	5	25.395.3253.0
100	16.20	10	3	25.394.3353.0		14.60	10	25.395.3353.0
50	21.20	15	4	25.394.3453.0		19.60	15	25.395.3453.0
50	26.20	20	5	25.394.3553.0		24.60	20	25.395.3553.0
50	31.20	25	6	25.394.3653.0		29.60	25	25.395.3653.0
50	36.20	30	7	25.394.3753.0		34.60	30	25.395.3753.0
50	41.20	35	8	25.394.3853.0		39.60	35	25.395.3853.0
50	46.20	40	9	25.394.3953.0		44.60	40	25.395.3953.0
50	51.20	45	10	25.394.4053.0		49.60	45	25.395.4053.0
50	56.20	50	11	25.394.4153.0		54.60	50	25.395.4153.0
50	61.20	55	12	25.394.4253.0		59.60	55	25.395.4253.0
50	66.20	60	13	25.394.4353.0		64.60	60	25.395.4353.0
50	71.20	65	14	25.394.4453.0		69.60	65	25.395.4453.0
50	76.20	70	15	25.394.4553.0		74.60	70	25.395.4553.0
50	81.20	75	16	25.394.4653.0		79.60	75	25.395.4653.0
	17 to 24pole upon request							
Spacing: 5.08 mm				unmarked				unmarked
100	11.36	5.08	2	25.396.3253.0		9.76	5.08	25.397.3253.0
100	16.44	10.16	3	25.396.3353.0		14.84	10.16	25.397.3353.0
50	21.52	15.24	4	25.396.3453.0		19.92	15.24	25.397.3453.0
50	26.60	20.32	5	25.396.3553.0		25.00	20.32	25.397.3553.0
50	31.68	25.40	6	25.396.3653.0		30.08	25.40	25.397.3653.0
50	36.76	30.48	7	25.396.3753.0		35.16	30.48	25.397.3753.0
50	41.84	35.56	8	25.396.3853.0		40.24	35.56	25.397.3853.0
50	46.92	40.64	9	25.396.3953.0		45.32	40.64	25.397.3953.0
50	52.00	45.72	10	25.396.4053.0		50.40	45.72	25.397.4053.0
50	57.08	50.80	11	25.396.4153.0		55.48	50.80	25.397.4153.0
50	62.19	55.88	12	25.396.4253.0		60.56	55.88	25.397.4253.0
50	67.24	60.96	13	25.396.4353.0		65.64	60.96	25.397.4353.0
50	72.32	66.04	14	25.396.4453.0		70.72	66.04	25.397.4453.0
50	77.40	71.12	15	25.396.4553.0		75.80	71.12	25.397.4553.0
50	82.48	76.20	16	25.396.4653.0		80.88	76.20	25.397.4653.0
	17 to 24pole upon request							
Accessories:								
Coding piece (strip)	100			05.561.0053.0		05.561.0053.0		

Two-tier insulated headers for PC boards
Spacings: 5.00/5.08 mm

Rated current:
10 A

250 V/4 kV/3 – Overvoltage category III
400 V/4 kV/2 – Overvoltage category II
1000 V/4 kV/1 – Overvoltage category I

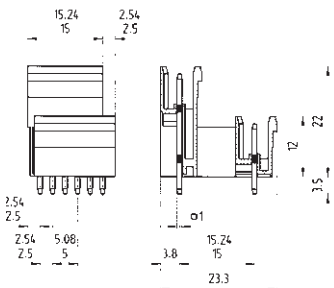

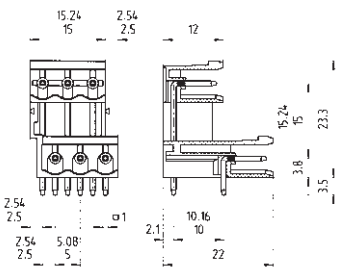

Solder pin 1 x 1 mm
Bore hole Ø 1.4 mm

Solder pin 1 x 1 mm
Bore hole Ø 1.4 mm

	Type 8113 SE/... G, 8213 SE/... G vertical mount			Type 8113 SE/... W, 8213 SE/... W horizontal mount		
Rated voltages: VDE 0110						
UL ratings		300 V	15 A		300 V	15 A
CSA ratings		300 V	10 A		300 V	10 A
Approvals						
Std. pack / T / Poles	Part no.	Part no.		Part no.		
Spacing: 5.00 mm	unmarked			unmarked		
100 / 5 / 2 x 2	25.334.3253.0			25.336.3253.0		
100 / 10 / 2 x 3	25.334.3353.0			25.336.3353.0		
Slide together for larger pole configurations. Factory assembly available.						
Spacing: 5.08 mm	unmarked			unmarked		
100 / 5.08 / 2 x 2	25.354.3253.0			25.356.3253.0		
100 / 10.16 / 2 x 3	25.354.3353.0			25.356.3353.0		
Slide together for larger pole configurations. Factory assembly available.						
Accessories:						
End plate / 50	07.310.9853.0			07.310.9853.0		
Fixing device assembly - for screw flanges on both sides of the header	upon request			only together with end plate 07.310.9853.0 Z5.523.2453.0		

Insulated header

wiecon PCB

Rated current: 10 A

250 V/4 kV/3 – Overvoltage category III
400 V/4 kV/2 – Overvoltage category III
400 V/4 kV/2 – Overvoltage category II

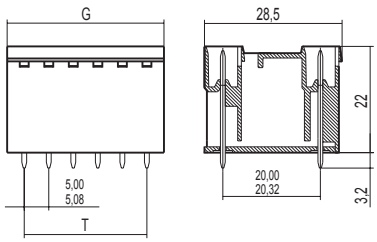

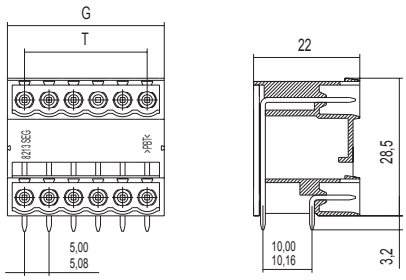

Solder pin 1 x 1 mm
Bore hole Ø 1.3 mm

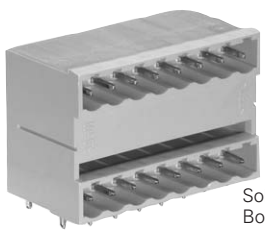

Solder pin 1 x 1 mm
Bore hole Ø 1.3 mm

	Type 81-8213 SEG .../G Vertical mount	Type 81-8213 SEG .../W Horizontal mount
Rated voltages: VDE 0110	300 V 10 A	300 V 10 A
UL ratings	300 V 10 A	300 V 10 A
CSA ratings		
Approvals		

Std. pack	G	T	Poles	Part no.	Part no.	Part no.	Part no.
Spacing: 5.00 mm				unmarked		unmarked	
100	12	5	4	27.334.0253.0		27.336.0253.0	
100	17	10	6	27.334.0353.0		27.336.0353.0	
50	22	15	8	27.334.0453.0		27.336.0453.0	
50	27	20	10	27.334.0553.0		27.336.0553.0	
50	32	25	12	27.334.0653.0		27.336.0653.0	
50	37	30	14	27.334.0753.0		27.336.0753.0	
50	42	35	16	27.334.0853.0		27.336.0853.0	
50	47	40	18	27.334.0953.0		27.336.0953.0	
50	52	45	20	27.334.1053.0		27.336.1053.0	
50	57	50	22	27.334.1153.0		27.336.1153.0	
50	62	55	24	27.334.1253.0		27.336.1253.0	
50	67	60	26	27.334.1353.0		27.336.1353.0	
50	72	65	28	27.334.1453.0		27.336.1453.0	
50	77	70	30	27.334.1553.0		27.336.1553.0	
50	82	75	32	27.334.1653.0		27.336.1653.0	
17 to 24pole upon request							
Spacing: 5.08 mm				unmarked		unmarked	
100	12.16	5.08	4	27.354.0253.0		27.356.0253.0	
100	17.24	10.16	6	27.354.0353.0		27.356.0353.0	
50	22.32	15.24	8	27.354.0453.0		27.356.0453.0	
50	27.40	20.32	10	27.354.0553.0		27.356.0553.0	
50	32.48	25.40	12	27.354.0653.0		27.356.0653.0	
50	37.56	30.48	14	27.354.0753.0		27.356.0753.0	
50	42.64	35.56	16	27.354.0853.0		27.356.0853.0	
50	47.72	40.64	18	27.354.0953.0		27.356.0953.0	
50	52.80	45.72	20	27.354.1053.0		27.356.1053.0	
50	57.88	50.80	22	27.354.1153.0		27.356.1153.0	
50	62.96	55.88	24	27.354.1253.0		27.356.1253.0	
50	68,04	60.96	26	27.354.1353.0		27.356.1353.0	
50	73.12	66.04	28	27.354.1453.0		27.356.1453.0	
50	78.20	71.12	30	27.354.1553.0		27.356.1553.0	
50	83.28	76.20	32	27.354.1653.0		27.356.1653.0	
17 to 24pole upon request							
				Coding available on request		Coding available on request	

Insulated header for panel mount feed through, Spacing: 5.08 mm

codable

Wire wrap connection 1 x 1
Max. pin diameter: 0.8 mm

Rated current: 6.5 A

Solder eyelets
Rated cross section:
1.5 mm² solid/
1.0 mm² fine stranded

Rated current: 12 A

Quick connect tabs 2.8 x 0.8 DIN 46249
Rated cross section:
1.0 mm² fine stranded

Rated current: 8 A

250 V/4 kV/3 – Overvoltage category III
400 V/4 kV/2 – Overvoltage category II
1000 V/4 kV/1 – Overvoltage category I

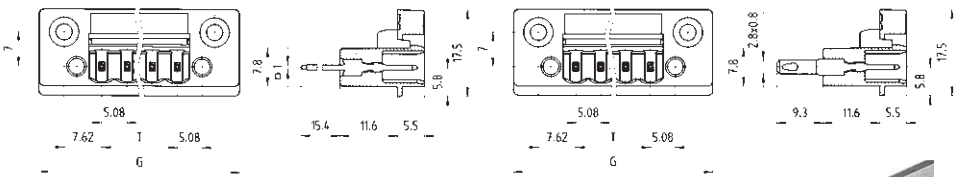

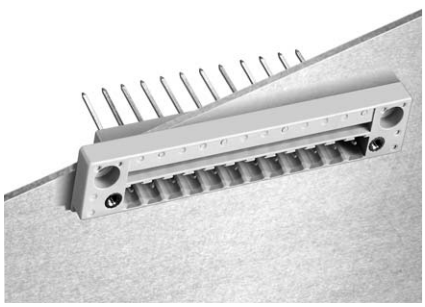

wire wrap

Type 8213 S/... DFWW,
8213 S/... DFWW M

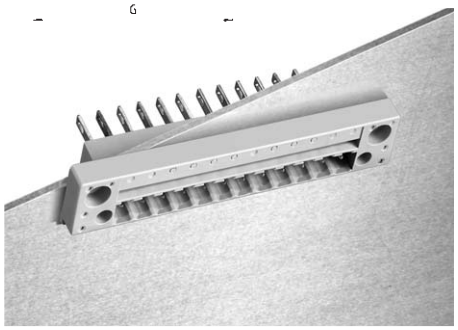

with solder eyelets / quick connect tabs

Type 8213 S/... DFLS,
8213 S/... DFLS M

Rated voltages: VDE 0110	No. 22 – 12 AWG	300 V	6.5 A
UL ratings	No. 22 – 12 AWG	300 V	6.5 A
CSA ratings			
Approvals			

No. 22 – 12 AWG	300 V	12/8 A
No. 22 – 12 AWG	300 V	8 A

Std. pack	G	T	Poles	Part no. unmarked	Part no. unmarked	Part no. unmarked	Part no. unmarked
Spacing: 5.08 mm							
100	30.48	5.08	2	25.303.0253.0	25.313.0253.0	25.303.3253.0	25.313.3253.0
100	35.56	10.16	3	25.303.0353.0	25.313.0353.0	25.303.3353.0	25.313.3353.0
50	40.64	15.24	4	25.303.0453.0	25.313.0453.0	25.303.3453.0	25.313.3453.0
50	45.72	20.32	5	25.303.0553.0	25.313.0553.0	25.303.3553.0	25.313.3553.0
50	50.80	25.40	6	25.303.0653.0	25.313.0653.0	25.303.3653.0	25.313.3653.0
50	55.88	30.48	7	25.303.0753.0	25.313.0753.0	25.303.3753.0	25.313.3753.0
50	60.96	35.56	8	25.303.0853.0	25.313.0853.0	25.303.3853.0	25.313.3853.0
50	66.04	40.64	9	25.303.0953.0	25.313.0953.0	25.303.3953.0	25.313.3953.0
50	71.12	45.72	10	25.303.1053.0	25.313.1053.0	25.303.4053.0	25.313.4053.0
50	76.20	50.80	11	25.303.1153.0	25.313.1153.0	25.303.4153.0	25.313.4153.0
50	81.28	55.88	12	25.303.1253.0	25.313.1253.0	25.303.4253.0	25.313.4253.0
50	86.36	60.96	13	25.303.1353.0	25.313.1353.0	25.303.4353.0	25.313.4353.0
50	91.44	66.04	14	25.303.1453.0	25.313.1453.0	25.303.4453.0	25.313.4453.0
50	96.52	71.12	15	25.303.1553.0	25.313.1553.0	25.303.4553.0	25.313.4553.0
50	101.60	76.20	16	25.303.1653.0	25.313.1653.0	25.303.4653.0	25.313.4653.0
			17 to 22pole upon request	without screw flange	with screw flange	without screw flange	with screw flange

Mounting dimensions

a	b	
13.18	20.32	2
18.26	25.40	3
23.34	30.48	4
28.42	35.56	5
33.50	40.64	6
38.58	45.72	7
43.66	50.80	8
48.74	55.08	9
53.82	60.96	10
58.90	66.04	11
68.98	71.12	12
69.06	76.20	13
74.14	81.28	14
79.22	86.36	15
84.30	91.44	16

17 to 24pole upon request

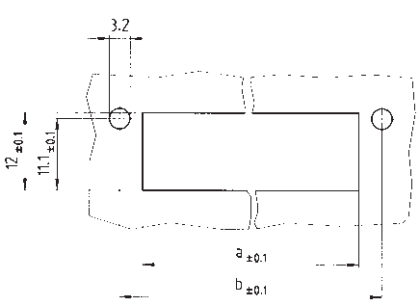

Accessories:

Coding piece (strip)	100	05.561.0053.0	05.561.0053.0
Set of screws	100	Z6.012.0812.0	Z6.012.0812.0

wiecon

Accessories for 8113 – 8413/8813 and 8213 BL

wiecon PCB

Bore hole plan for fixing brackets Z5.523.2453.0

Type 8113 SE/... and 8213 SE/...

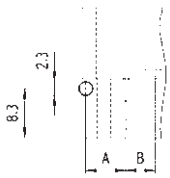

	A	B
8113	6.3	5.00
8213	6.8	5.08

Bore hole plan for fixing brackets Z5.523.2453.0

Type 81 – 8413 S/...

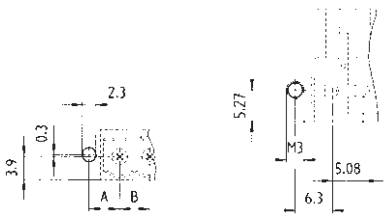

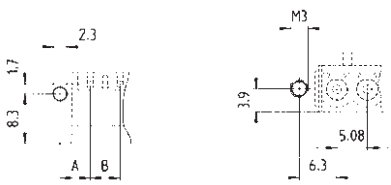

	A	B
8113	5.1	5.00
8213	5.2	5.08
8313	5.4	7.50
8413	5.4	7.62

8113 – 8413/8813

	Part no.	Std. pack
Fixing brackets (type 8113 – 8413)	Z5.523.2453.0	100
End plate for multi-tier header (type 8113 – 8213 SE)	07.310.9853.0	50
Coding strip for – header (type 8113 – 8413, type 8813)	05.561.0053.0	100
– plug (type 8113 – 8413)	05.561.9153.0	100

Examples of fixing brackets assembly for insulated headers

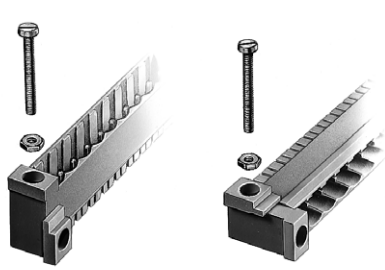

Assembly of fixing brackets with end plate for multi-tier headers

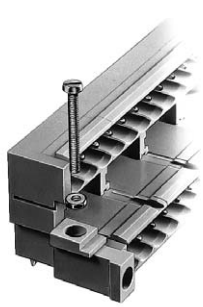

8213 BL

Adhesive marking tag strips for plug connectors and insulated headers with 5/5.08 mm spacing

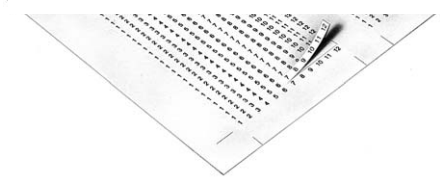

	Part no.	Std. pack
1 – 12	04.007.4089.0	1
13 – 24	04.007.4189.0	1
25 – 36	04.007.4289.0	1
37 – 68	04.007.4389.0	1
49 – 60	04.007.4489.0	1
61 – 72	04.007.4589.0	1
73 – 84	04.007.4689.0	1
85 – 96	04.007.4789.0	1
97 – 108	04.007.4889.0	1

Fixing brackets

Z5.523.7753.0 100

Z5.523.7853.0 100

wiecon

Duo feed through DIN rail terminal blocks with connection for PC board pluggables

wiecon PCB

For PC board connectors 8113 BFK

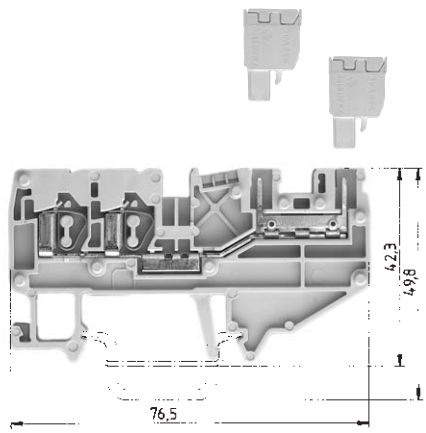

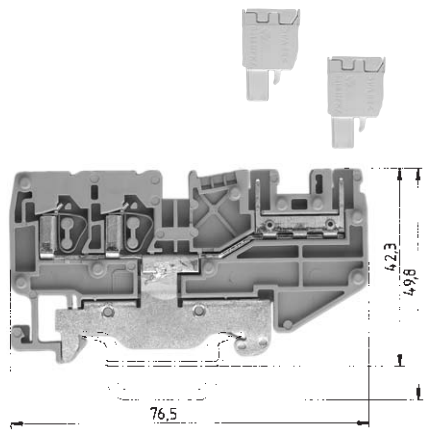

		WKF 2.5 D2/8113/35				WKF 2.5 D2/8113 SL/35			
		fine stranded	solid	V	A	fine stranded	solid	V	A
EN 60 947-7-1/DIN VDE 0611 T1		0.13 – 2.5 mm²	0.13 – 4 mm²	250 V/4 kV/3	16	0.13 – 2.5 mm²	0.13 – 4 mm²	250 V/4 kV/3	16
UL ratings	field/factory wiring	No. 22 – 12 AWG		300	15	No. 22 – 12 AWG		300	
CSA ratings		No. 24 – 12 AWG		300	15	No. 24 – 12 AWG		300	
Width	Wire strip length	5 mm			11 mm	5 mm			11 mm
Approvals									

		Type	Part no.	Std. pack	Type	Part no.	Std. pack
Duo feed-through terminal block	Color: gray	WKF 2,5 D2/8113/35	56.703.2053.0	100			
	Color: blue	WKF 2,5 D2/8113/35 BLAU	56.703.2053.6	100			
Duo ground block	Color: green/yellow				WKF 2,5 D2/8113 SL/35	56.703.9253.0	100
Multi-tier block	Color: gray						
Accessories							
1. Mounting rail TS 35, DIN rail7.5 high	L = 2 m	35x27x7,5 EN 50022	98.300.0000.0	1	35x27x7,5 EN 50022	98.300.0000.0	1
Mounting rail TS 35, DIN rail 15 mm high	L = 2 m	35x24x15 EN 50022	98.360.0000.0	1	35x24x15 EN 50022	98.360.0000.0	1
2. End clamp TS 35, with screw	8 mm wide	9708/2 S35	Z5.522.8553.0	100	9708/2 S35	Z5.522.8553.0	100
End clamp for TS 35, without screws	8 mm wide	WEF 1/35	Z5.523.9353.0	100	WEF 1/35	Z5.523.9353.0	100
3. End plate	Color: gray	APF 2,5/D2/8113	07.312.4153.0	10	APF 2,5/D2/8113	07.312.4153.0	10
	Color: blue	APF 2,5/D2/8113	07.312.4153.6	10			
4. Partition plate	Color: gray						
	Color: blue						
5. Cross connector	2pole	IVB WKF 2,5 – 2	Z7.280.6227.0	10			
insulated	3pole	IVB WKF 2,5 – 3	Z7.280.6327.0	10			
	4pole	IVB WKF 2,5 – 4	Z7.280.6427.0	10			
	5pole	IVB WKF 2,5 – 5	Z7.280.6527.0	10			
	6pole	IVB WKF 2,5 – 6	Z7.280.6627.0	10			
	7pole	IVB WKF 2,5 – 7	Z7.280.6727.0	20			
	8pole	IVB WKF 2,5 – 8	Z7.280.6827.0	20			
	9pole	IVB WKF 2,5 – 9	Z7.280.6927.0	20			
	10pole	IVB WKF 2,5 – 10	Z7.280.7027.0	20			
6. Wire entry guide	0.13 – 0.2 mm²	LEL 2,5/1 WEISS	05.561.6553.0	100	LEL 2,5/1 WEISS	05.561.6553.0	100
	0.25 – 0.5 mm²	LEL 2,5/2 GRAU	05.561.6653.0	100	LEL 2,5/2 GRAU	05.561.6653.0	100
	0.75 – 1.0 mm²	LEL 2,5/3 SCHWARZ	05.561.6753.0	100	LEL 2,5/3 SCHWARZ	05.561.6753.0	100
7. Cover with warning symbol over 4 blocks		ADF 2,5/4 GELB	04.343.6053.8	10	ADF 2,5/4 GELB	04.343.6053.8	10
Pin cover with warning symbol over 4 poles		AD 8113/4 GELB	04.343.6853.8	10	AD 8113/4 GELB	04.343.6853.8	10
8. Screwdriver, uninsulated		DIN 5264 B 0,6x3,5	06.502.4000.0	5	DIN 5264 B 0,6x3,5	06.502.4000.0	5
9. Coding piece (strip)			05.561.0053.0	100		05.561.0053.0	100
10. Marking accessories		See ***fasis*** page 36			See ***fasis*** page 36		
					Note ***fasis*** page 36 !		

Pluggable PC board connectors
Spring clamp / rising cage clamp
Spacing: 5.00 mm

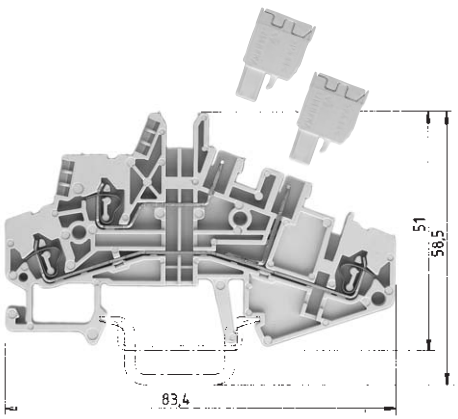

Rated current:
12 A

250 V/4 kV/3 – Overvoltage category III
400 V/4 kV/2 – Overvoltage category II
1000 V/4 kV/1 – Overvoltage category I

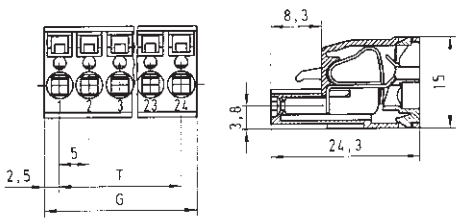

When using ferrules for conductor cross section of 2.5 mm², use only ferrule no. 05.596.6127.0.

See catalog section ***facts*** & DATA pages 796 - 797

WKF 1.5 E/8113/35

fine stranded	solid	V	A
0.13 – 1.5 mm²	0.13 – 2.5 mm²	250 V/4 kV/3	16
No. 22 – 14			
No. 24 – 14			
5 mm			11 mm
pending			

Rated voltages: VDE 0110
EN 60 947-7-1/DIN VDE 0611 T1
Spacing: Wire strip length
UL ratings
CSA ratings
Approvals pending

Type 8113 BFK

0.13 – 2.5 mm² fine stranded	0.13 – 4 mm² solid	
11 mm		9 mm
No. 22 – 12 AWG	300 V	12 A
No. 22 – 12 AWG	300 V	12 A

Type	Part no.	Std. pack
WKF 1,5 E/8113/35	56.702.2053.0	100
35x27x7,5 EN 50022	98.300.0000.0	1
35x24x15 EN 50022	98.360.0000.0	1
9708/2 S35	Z5.522.8553.0	100
WEF 1/35	Z5.523.9353.0	100
APF 1,5/E/8113	07.312.4753.0	10
IVB WKF 2,5 – 2	Z7.280.6227.0	10
IVB WKF 2,5 – 3	Z7.280.6327.0	10
IVB WKF 2,5 – 4	Z7.280.6427.0	10
IVB WKF 2,5 – 5	Z7.280.6527.0	10
IVB WKF 2,5 – 6	Z7.280.6627.0	10
IVB WKF 2,5 – 7	Z7.280.6727.0	20
IVB WKF 2,5 – 8	Z7.280.6827.0	20
IVB WKF 2,5 – 9	Z7.280.6927.0	20
IVB WKF 2,5 – 10	Z7.280.7027.0	20
LEL 1,5/1 WEISS	05.562.2453.0	100
LEL 1,5/2 GRAU	05.562.2553.0	100
LEL 1,5/3 SCHWARZ	05.562.2653.0	100
ADF 2,5/4 GELB	04.343.6053.8	10
AD 8113/4 GELB	04.343.6853.8	10
DIN 5264 B 0,6x3,5	06.502.4000.0	5
	05.561.0053.0	100

See ***fasis*** page 37

Spacing: 5.00 mm	Std. pack	G	T	Poles	Part no. unmarked	Part no. marked
	100	10	5	2	25.820.3253.0	25.820.0253.0
	100	15	10	3	25.820.3353.0	25.820.0353.0
	50	20	15	4	25.820.3453.0	25.820.0453.0
	50	25	20	5	25.820.3553.0	25.820.0553.0
	50	30	25	6	25.820.3653.0	25.820.0653.0
	50	35	30	7	25.820.3753.0	25.820.0753.0
	50	40	35	8	25.820.3853.0	25.820.0853.0
	50	45	40	9	25.820.3953.0	25.820.0953.0
	50	50	45	10	25.820.4053.0	25.820.1053.0
	50	55	50	11	25.820.4153.0	25.820.1153.0
	50	60	55	12	25.820.4253.0	25.820.1253.0
	50	65	60	13	25.820.4353.0	25.820.1353.0
	50	70	65	14	25.820.4453.0	25.820.1453.0
	50	75	70	15	25.820.4553.0	25.820.1553.0
	50	80	75	16	25.820.4653.0	25.820.1653.0
	17 to 24pole upon request					

Accessories:

Coding piece (strip)	100	05.561.9153.0
Screwdriver DIN 5264 B 0.6 x 3.5	5	06.502.4000.0

Feed through DIN rail terminal blocks with connection for PC board pluggables

wiecon PCB

For PC board connectors:
– Type 8113 B
– Type 8113 BFK
– Type 8313 B
– Type 8113 B/VL
– Type 8113 B/VR
– Type 8113 B/Top

Indicator: R = 4.7 K; 0.5 W
Signal color: red

[1] for blocks with indicator determined by LED

The part numbers marked with ***) are supplied with UL 94-V0 insulating housings (flammability class).

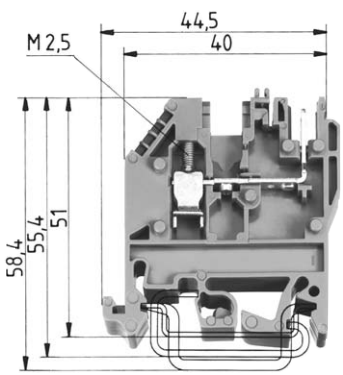

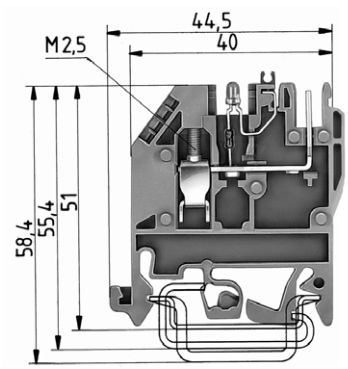

	WK 2.5 U / 8113 S/V				WK 2.5 U / 8113 S/V / LED 25			
	fine stranded	solid	V	A	fine stranded	solid	V	A
EN 60 947-7-1/DIN VDE 0611 T1	0.5 – 2.5 mm²	0.5 – 4 mm²	250 V/4 kV/3	12	0.5 – 2.5 mm²	0.5 – 4 mm²	[1]	12
UL ratings	No. 22 – 12	AWG	300 V	15	No. 22 – 12	AWG	300 V	15
CSA ratings	No. 24 – 12	AWG	300 V	15	No. 24 – 12	AWG	25 V [1]	15
Width	5 mm			9 mm	5 mm			9 mm
Wire strip length								
Approvals								

		Type	Part no.	Std. pack	Type	Part no.	Std. pack
Feed through block	Color: gray	WK 2,5 U/8113 S/V...***)	57.503.2655.6	50			
Feed through block with LED 25 V	Color: gray				WK 2,5 U/8113 S/V/LED 25***)	57.503.2755.0	50
Feed-through block with LED 50 V	Color: gray						
Power supply block	Color: blue						
Feed through blocks with header connection							
For insulated headers type 8113 see page 297							
Accessories							
Mounting rail TS35 Din rail 7.5 mm high	L = 2 m						
Mounting rail TS 35, DIN rail, 15mm high	L = 2 m						
Mounting rail 32 G rail	L = 2 m						
End clamp with U foot	10 mm wide						
End clamp TS 35 with screw	8 mm wide						
End clamp TS 32 with screw	7.5 mm wide						
End plate for right side 2.5 mm thick	Color: gray	AP 2,5 U/8113 S/V ***)	07.312.1555.0	10	AP 2,5 U/8113 S/V ***)	07.312.1555.0	10
End plate for left side, 2.5 mm thick	Color: gray	AP 2,5 U/8113 ***)	07.312.4655.0	10	AP 2,5 U/8113 ***)	07.312.4655.0	10
End plate, 2.5 mm thick	Color: blue						
Partition, right side, 2.5 mm thick	Color: gray	ZP 2,5 U/8113 S/V	07.312.1655.0	10	ZP 2,5 U/8113 S/V	07.312.1655.0	10
Partition, 2.5 mm thick	Color: blue						
(for PC board headers in 7.5 mm spacing)							
Cross connector with screws, E-Cu	insulated						
	2pole	IVB WK 2,5-2	Z7.280.2227.0	10	IVB WK 2,5-2	Z7.280.2227.0	10
	3pole	IVB WK 2,5-3	Z7.280.2327.0	10	IVB WK 2,5-3	Z7.280.2327.0	10
	up to 12pole	IVB WK 2,5-12	Z7.280.3227.0	10	IVB WK 2,5-12	Z7.280.3227.0	10
Jumper rail, tin-plated brass	L = 0.4 m		05.561.4125.0	1		05.561.4125.0	1
Single cover for cross connector with marking capabil.		ADVB 2,5 GELB	04.326.2053.0		ADVB 2,5 GELB	04.326.2053.0	
Cover strip for header	24pole		04.343.9056.0			04.343.9056.0	
Cover for header with warning symbol			04.343.9156.0			04.343.9156.0	
Partition plate		TS 2,5 GELB	07.311.2053.0		TS 2,5 GELB	07.311.2053.0	
Coding piece (strip)			05.561.0053.0			05.561.0053.0	100
locking piece	10pole						
For marking accessories see page 394							

Indicator: R = 10 K; 0.5 W
Signal color: red

[1] for blocks with indicator determined by LED

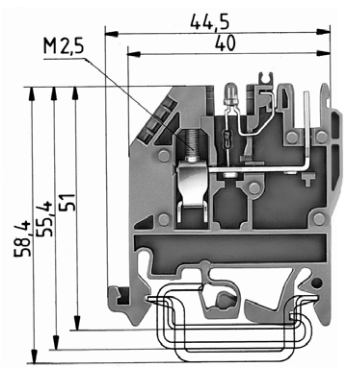

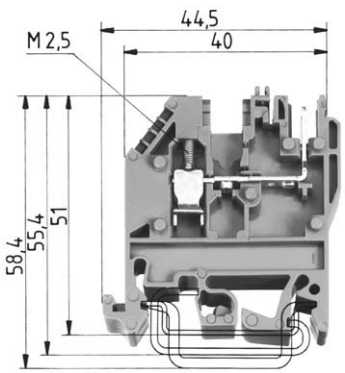

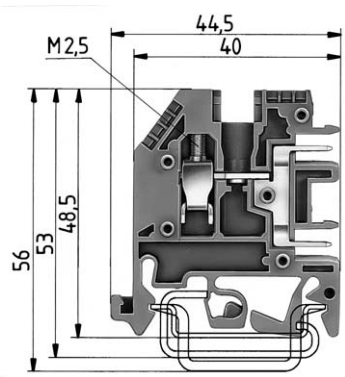

WK 2.5 U / 8113 S/V / LED 50

fine stranded	solid	V	A
0.5 – 2.5 mm²	0.5 – 4 mm²	[1]	12
No. 22 – 12	AWG	300 V	15
No. 24 – 12	AWG	50 V [1]	15
5 mm			9 mm

Type	Part no.	Std. pack
WK 2,5 U/8113 S/V/LED 50***)	57.503.2855.0	50
AP 2,5 U/8113 S/V ***)	07.312.1555.0	10
AP 2,5 U/8113 ***)	07.312.4655.0	10
ZP 2,5 U/8113 S/V	07.312.1655.0	10
IVB WK 2,5-2	Z7.280.2227.0	10
IVB WK 2,5-3	Z7.280.2327.0	10
IVB WK 2,5-12	Z7.280.3227.0	10
	05.561.4125.0	1
ADVB 2,5 GELB	04.326.2053.0	
	04.343.9056.0	
	04.343.9156.0	
TS 2,5 GELB	07.311.2053.0	
	05.561.0053.0	100

WK 2.5 U / 8113 S/V /VK

fine stranded	solid	V	A
0.5 – 2.5 mm²	0.5 – 4 mm²	250 V/4 kV/3	12
No. 22 – 12	AWG	300 V	15
No. 24 – 12	AWG	300 V	15
5 mm			9 mm

Type	Part no.	Std. pack
WK 2,5 U/8113 S/V/VK***)	57.503.3055.6	100
AP 2,5 U/8113 ***)	07.312.4655.0	10
AP 2,5 U/8113 S/V BL***)	07.312.1555.0	10
ZP 2,5 U/8113 S/V	07.312.1655.0	10
ZP 2,5 U/8113 S/V BL	07.312.1655.6	10
IVB WK 2,5-2	Z7.280.2227.0	10
IVB WK 2,5-3	Z7.280.2327.0	10
IVB WK 2,5-12	Z7.280.3227.0	10
	05.561.4125.0	1
ADVB 2,5 GELB	04.326.2053.0	
	04.343.9056.0	
	04.343.9156.0	
TS 2,5 GELB	07.311.2053.0	
	05.561.0053.0	100

WK 2.5 U / 8113 S/H

fine stranded	solid	V	A
0.5 – 2.5 mm²	0.5 – 4 mm²	250 V/4 kV/3	12
No. 22 – 12	AWG	300 V	20
No. 24 – 12	AWG	300 V	15
5 mm			9 mm

Type	Part no.	Std. pack
WK 2,5 U/8113 S/H***)	57.503.2055.0	100
AP 2,5 U/8113 S/H ***)	07.311.9855.0	10
IVB WK 2,5-2	Z7.280.2227.0	10
IVB WK 2,5-3	Z7.280.2327.0	10
IVB WK 2,5-12	Z7.280.3227.0	10
	05.561.4125.0	1
ADVB 2,5 GELB	04.326.2053.0	
	04.343.9056.0	
	04.343.9156.0	
TS 2,5 GELB	07.311.2053.0	
	05.584.0053.0	100
	05.576.5853.0	25

Feed through DIN rail terminal blocks with connection for PC board pluggables

wiecon PCB

For PC board connectors:
– Type 8113 B
– Type 8113 BFK
– Type 8313 B
– Type 8113 B/VL
– Type 8113 B/VR
– Type 8113 B/Top

Indicator: R = 4.7 K; 0.5 W
Signal color: red

[1] for blocks with indicator determined by LED

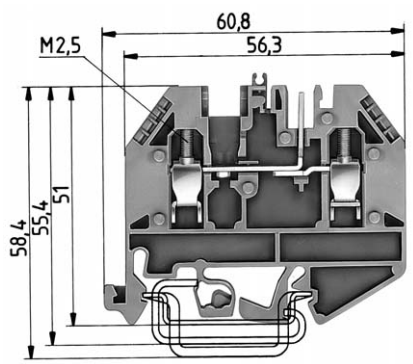

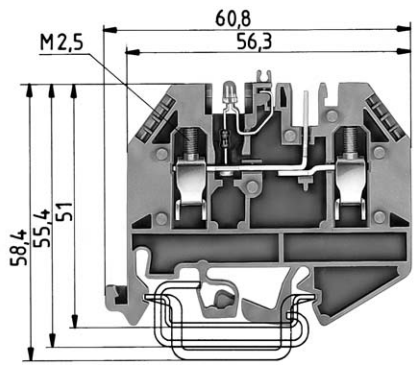

The part numbers marked with ***) are supplied with UL 94-V0 insulating housings (flammability class).

		WK 2.5 U /D/ 8113 S/V				WK 2.5 U /D/ 8113 S/V / LED 25			
		fine stranded	solid	V	A	fine stranded	solid	V	A
EN 60 947-7-1/DIN VDE 0611 T1		0.5 – 2.5 mm²	0.5 – 4 mm²	250 V/4 kV/3	12	0.5 – 2.5 mm²	0.5 – 4 mm²	[1]	12
UL ratings		No. 22 – 12	AWG	300 V	15	No. 22 – 12	AWG	300 V	15
CSA ratings		No. 24 – 12	AWG	300 V	15	No. 24 – 12	AWG	25 V [1]	15
Width	Wire strip length	5 mm			9 mm	5 mm			9 mm
Approvals									

		Type	Part no.	Std. pack	Type	Part no.	Std. pack
Feed through block	Color: gray	WK 2,5 U/D/8113 S/V...***)	57.503.2155.0	50			
Feed through block with LED 25 V	Color: gray				WK 2,5 U/D/8113 S/V/LED 25***)	57.503.2255.0	50
Feed-through block with LED 50 V	Color: gray						
Power supply block	Color: blau						
Feed through block with header connection							
For insulated headers type 8113 see page 297							
Accessories							
Mounting rail TS 35 DIN rail 7.5 mm high	L = 2 m						
Mounting rail TS 35, DIN rail, 15mm high	L = 2 m						
Mounting rail 32 G rail	L = 2 m						
End clamp with U foot	10 mm wide						
End clamp TS 35 with screw	8 mm wide						
End clamp TS 32 with screw	7.5 mm wide						
End plate, 2.5 mm thick	Color: gray	AP 2,5 U/D/8113 S/V ***)	07.311.9055.0	10	AP 2,5 U/D/8113 S/V***)	07.311.9055.0	10
End plate, 2.5 mm thick	Color: blue						
Partition, 2.5 mm thick	Color: gray	ZP 2,5 U/D/8113 S/V	07.311.9155.0	10	ZP 2,5 U/D/8113 S/V	07.311.9155.0	10
Partition, 2.5 mm thick	Color: blue						
(for PC board headers in 7.5 mm spacing)							
Cross connector with screws, E-Cu	insulated						
	2pole	IVB WK 2,5-2	Z7.280.2227.0	10	IVB WK 2,5-2	Z7.280.2227.0	10
	3pole	IVB WK 2,5-3	Z7.280.2327.0	10	IVB WK 2,5-3	Z7.280.2327.0	10
	up to 12pole	IVB WK 2,5-12	Z7.280.3227.0	10	IVB WK 2,5-12	Z7.280.3227.0	10
Jumper rail, tin-plated brass	L = 0.4 m		05.561.4125.0	1		05.561.4125.0	1
Cover strip for LED (transparent)		ADVB 5/10 P	04.342.3556.8	10	ADVB 5/10 P	04.342.3556.8	10
Single cover for cross connector with marking capabil.		ADVB 2,5 GELB	04.326.2053.8	10	ADVB 2,5 GELB	04.326.2053.8	10
Cover strip for header	24pole		04.343.9056.8	10		04.343.9056.8	10
Cover strip for header with warning symbol	24pole		04.343.9156.8	10		04.343.9156.8	10
Partition plate		TS 2,5 GELB	07.311.2053.8	10	TS 2,5 GELB	07.311.2053.8	10
Coding piece (strip)			05.561.0053.0	100		05.561.0053.0	100
For marking accessories see page 394							

Indicator: R = 10 K; 0.5 W
Signal color: red

[1] for blocks with indicator determined by LED

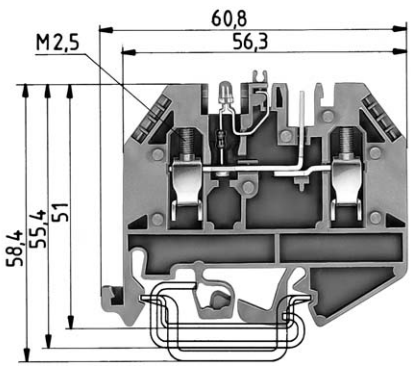

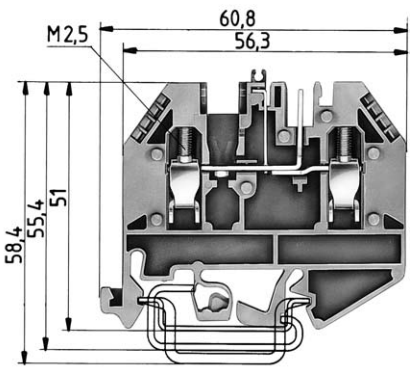

WK 2.5 U /D/ 8113 S/V / LED 50

fine stranded	solid	V	A
0.5 – 2.5 mm²	0.5 – 4 mm²	[1]	12
No. 22 – 12	AWG	300 V	15
No. 24 – 12	AWG	50 V [1]	15
5 mm			9 mm

WK 2.5 U /D/ 8113 S/V /VK

fine stranded	solid	V	A
0.5 – 2.5 mm²	0.5 – 4 mm²	250 V/4 kV/3	12
No. 22 – 12	AWG	300 V	15
No. 24 – 12	AWG	300 V	15
5 mm			9 mm

Type	Part no.	Std. pack	Type	Part no.	Std. pack
WK 2,5 U/D/8113 S/V/LED 50***)	57.503.2355.0	50			
			WK 2,5 U/D/8113 S/V/VK***)	57.503.2555.6	50
AP 2,5 U/D/8113 S/V ***)	07.311.9055.0	10			
			AP 2,5 U/D/8113 S/V BL***)	07.311.9055.6	10
ZP 2,5 U/D/8113 S/V	07.311.9155.0	10			
			ZP 2,5 U/D/8113 S/V BL	07.311.9155.6	10
IVB WK 2,5-2	Z7.280.2227.0	10	IVB WK 2,5-2	Z7.280.2227.0	10
IVB WK 2,5-3	Z7.280.2327.0	10	IVB WK 2,5-3	Z7.280.2327.0	10
IVB WK 2,5-12	Z7.280.3227.0	10	IVB WK 2,5-12	Z7.280.3227.0	10
	05.561.4125.0	1		05.561.4125.0	1
ADVB 5/10 P	04.342.3556.8	10	ADVB 5/10 P	04.342.3556.8	10
ADVB 2,5 GELB	04.326.2053.8	10	ADVB 2,5 GELB	04.326.2053.8	10
	04.343.9056.8	10		04.343.9056.8	10
	04.343.9156.8	10		04.343.9156.8	10
TS 2,5 GELB	07.311.2053.8	10	TS 2,5 GELB	07.311.2053.8	10
	05.561.0053.0	100		05.561.0053.0	100

Pluggable PC board connectors with pin-strip headers

wiecon PCB

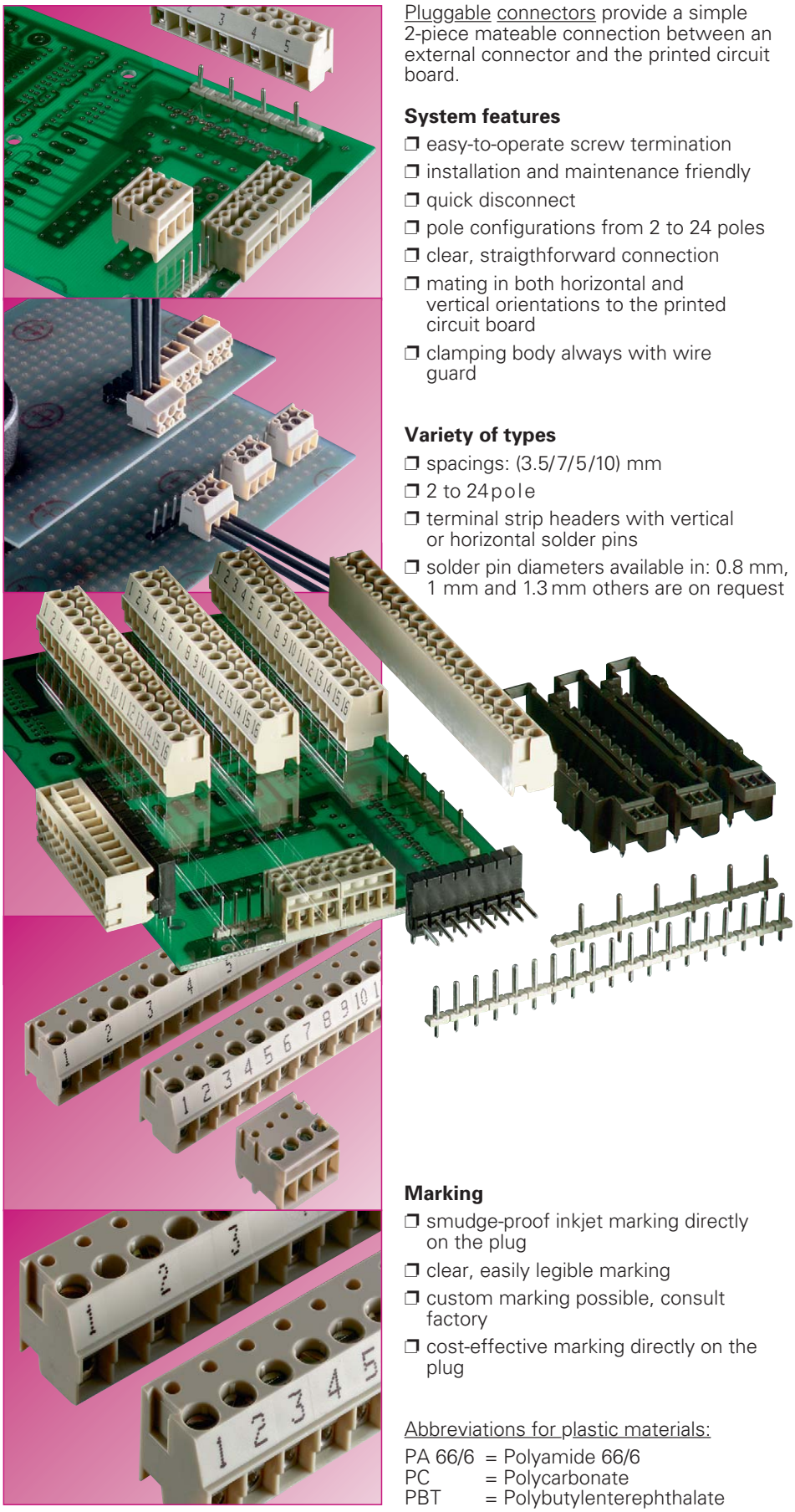

Pluggable connectors provide a simple 2-piece mateable connection between an external connector and the printed circuit board.

System features

- ❒ easy-to-operate screw termination
- ❒ installation and maintenance friendly
- ❒ quick disconnect
- ❒ pole configurations from 2 to 24 poles
- ❒ clear, straigthforward connection
- ❒ mating in both horizontal and vertical orientations to the printed circuit board
- ❒ clamping body always with wire guard

Variety of types

- ❒ spacings: (3.5/7/5/10) mm
- ❒ 2 to 24pole
- ❒ terminal strip headers with vertical or horizontal solder pins
- ❒ solder pin diameters available in: 0.8 mm, 1 mm and 1.3 mm others are on request

Marking

- ❒ smudge-proof inkjet marking directly on the plug
- ❒ clear, easily legible marking
- ❒ custom marking possible, consult factory
- ❒ cost-effective marking directly on the plug

Abbreviations for plastic materials:

PA 66/6 = Polyamide 66/6
PC = Polycarbonate
PBT = Polybutylenterephthalate

Material

Insulating housings:

- ❒ use of high-quality polycarbonate for its excellent electrical, mechanical and chemical characteristics (see ***facts*** & DATA)

Metal parts:

- ❒ made of special alloys and/or special surface platings

- ❒ minimum feed through resistance
- ❒ high corrosion resistance
- ❒ secure, consistent clamping function
- ❒ clamping body: nickel-plated brass
- ❒ clamping screw: steel, zinc-plated and dichromated
- ❒ plug contact of type 8142 and ST 29: tin-plated bronze
  plug contact of type 8543: nickel-plated brass
- ❒ wire guard: tin-plated bronze

Pin-strip headers:

- ❒ Insulating part: made from high-quality Polyamide 66/6
- ❒ glass-fibre reinforcement for dimensional stability
- ❒ Metal parts:
  contact pin: tin plated brass

Note:

The information regarding cross sectional areas and connection types pertains to connections without ferrules.

The indicated rated current pertains to the maximum load of the PC board connector with a connected wire of the indicated rated cross section.

The rated voltage is indicated as per DIN VDE 0110 part 1 (IEC 60 664-1) – insulation coordination for electrical material in low voltage application – and refers to the delivered state of the PC board connector.

Before the PC board is fitted with connectors, an appropriate PC board must be selected and dimensioned accordingly (e.g. regarding tracking resistance of the printed circuit board, distances of the leads and solder joints). Furthermore, the ambient conditions under which the device is to be used (pollution degree) must be considered.

The indicated rated voltages will be valid for the complete module only if the printed circuit board and its connectors are correctly and carefully matched to each other.

wiecon

		Page 316	Page 318	Page 320
		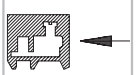		
Type		**8543**	**8142**	**ST 29**
Spacing	**mm**	**3.50/7.00**	**5.00/10.00**	**5.08**
Cross section	**mm²**	**1**	**2.5**	**1.5**
Number of poles		**2 – 24**	**2 – 24**	**10**

IERTES
O 9001
SSICHERUNGSSYSTEM
-Nr. 14 194-02

PC board connectors
pluggable, spacings: 3.50/7.00 mm

wiecon PCB

Rated cross section:
1.0 mm²

Rated current:
6 A

Connection range:
0.14 – 1.5 mm² solid/
0.14 – 1.0 mm² fine stranded

160 V/2.5 kV/3 – Overvoltage category III
250 V/2.5 kV/2 – Overvoltage category II
*690 V/2.5 kV/1 – Overvoltage category I

* max. 600 V for ungrounded networks or expected overvoltage ≤ 3 kV for L ≥ 2.0 mm and ≤ 2.5 kV for 2.0 mm > L ≥ 1.5 mm

Spacing: 3.50 mm

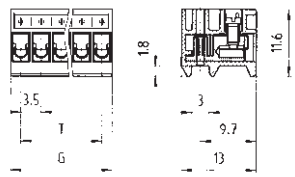

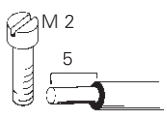

Spacing: 3.50 mm

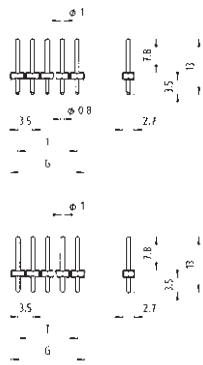

Color: gray
Solder pin Ø 0.8 mm
Bore hole Ø 1.0 mm

Color: black
Solder pin Ø 1.0 mm
Bore hole Ø 1.3 mm

Type 8543
plug-in 90° to wire entry

Terminal strip header
vertical mount

Rated voltages: VDE 0110 (spacing: 3.5 mm)			
UL ratings	No. 22 – 16 AWG	300 V	10 A
CSA ratings	No. 22 – 16 AWG	300 V	10 A
Approvals			

Std. pack	G	T	Poles	Part no. unmarked	Part no. marked	Part no. Color: gray	Part no. Color: black
Spacing: 3.50 mm							
100	7.0	3.5	2	25.602.5253.0	25.600.5253.0	Z5.531.0225.0	Z5.531.3225.0
100	10.5	7.0	3	25.602.5353.0	25.600.5353.0	Z5.531.0325.0	Z5.531.3325.0
50	14.0	10.5	4	25.602.5453.0	25.600.5453.0	Z5.531.0425.0	Z5.531.3425.0
50	17.5	14.0	5	25.602.5553.0	25.600.5553.0	Z5.531.0525.0	Z5.531.3525.0
50	21.0	17.5	6	25.602.5653.0	25.600.5653.0	Z5.531.0625.0	Z5.531.3625.0
50	24.5	21.0	7	25.602.5753.0	25.600.5753.0	Z5.531.0725.0	Z5.531.3725.0
50	28.0	24.5	8	25.602.5853.0	25.600.5853.0	Z5.531.0825.0	Z5.531.3825.0
50	31.5	28.0	9	25.602.5953.0	25.600.5953.0	Z5.531.0925.0	Z5.531.3925.0
50	35.0	31.5	10	25.602.6053.0	25.600.6053.0	Z5.531.1025.0	Z5.531.4025.0
50	38.5	35.0	11	25.602.6153.0	25.600.6153.0	Z5.531.1125.0	Z5.531.4125.0
50	42.0	38.5	12	25.602.6253.0	25.600.6253.0	Z5.531.1225.0	Z5.531.4225.0
50	45.5	42.0	13	25.602.6353.0	25.600.6353.0	Z5.531.1325.0	Z5.531.4325.0
50	49.0	45.5	14	25.602.6453.0	25.600.6453.0	Z5.531.1425.0	Z5.531.4425.0
50	52.5	49.0	15	25.602.6553.0	25.600.6553.0	Z5.531.1525.0	Z5.531.4525.0
50	56.0	52.5	16	25.602.6653.0	25.600.6653.0	Z5.531.1625.0	Z5.531.4625.0
			17 to 24pole upon request				
Spacing: 7.00 mm			upon request				

Rated voltages:
(spacing: 7 mm): VDE 0110

400 V/6 kV/3 – Overvoltage category III
690 V/6 kV/2 – Overvoltage category II
1000 V/6 kV/1 – Overvoltage category I

Material:
PC board connectors
Insulating housing: PC gray, UL 94-V-0
Clamping body with female contact:
tin-plated brass
Clamping screw: zinc-plated steel
Wire protection: tin-plated bronze

Terminal strip header
Insulating part: PA 66/6, glass-fibre reinforced
gray or black, UL 94-V-0
Contact pin: tin-plated brass

Spacing: 3.50 mm

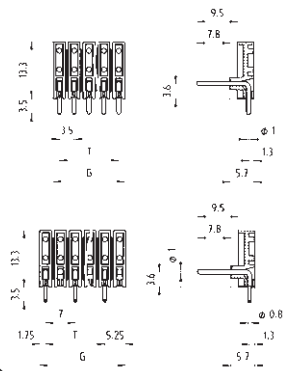

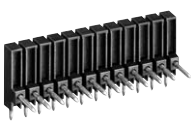

Color: black
Solder pin Ø 0.8 mm
Bore hole Ø 1.0 mm

Color: black
Solder pin Ø 1.0 mm
Bore hole Ø 1.3 mm

Terminal strip header

horizontal mount

Part no.	Part no.
Color: black	Color: black
Z5.532.0225.0 Z5.532.0325.0 Z5.532.0425.0	Z5.532.3225.0 Z5.532.3325.0 Z5.532.3425.0
Z5.532.0525.0 Z5.532.0625.0 Z5.532.0725.0	Z5.532.3525.0 Z5.532.3625.0 Z5.532.3725.0
Z5.532.0825.0 Z5.532.0925.0 Z5.532.1025.0	Z5.532.3825.0 Z5.532.3925.0 Z5.532.4025.0
Z5.532.1125.0 Z5.532.1225.0 Z5.532.1325.0	Z5.532.4125.0 Z5.532.4225.0 Z5.532.4325.0
Z5.532.1425.0 Z5.532.1525.0 Z5.532.1625.0	Z5.532.4425.0 Z5.532.4525.0 Z5.532.4625.0

PC board connectors
pluggable, spacings: 5.00/10.00 mm

wiecon PCB

Rated cross section:
2.5 mm²

Rated current:
8 A

Connection range:
0.14 – 4.0 mm² solid/
0.14 – 2.5 mm² fine stranded

200 V/4 kV/3 – Overvoltage category III
250 V/4 kV/2 – Overvoltage category II
1000 V/4 kV/1 – Overvoltage category I

Spacing: 5.00 mm

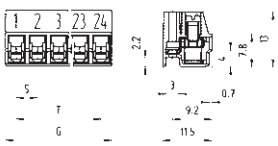

Spacing: 10.00 mm

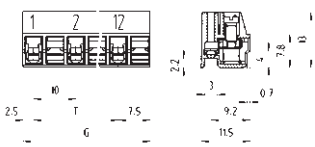

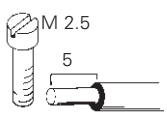

Type 8142
plug-in 90° to wire entry

Spacing: 5.00 mm

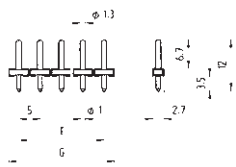

Spacing: 10.00 mm

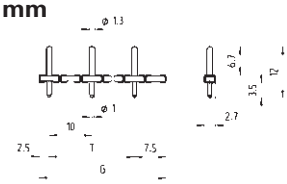

Color: gray
Solder pin Ø 1.0 mm
Bore hole Ø 1.3 mm

Color: black
Solder pin Ø 1.3 mm
Bore hole Ø 1.6 mm

Terminal strip header
vertical mount

Rated voltages: VDE 0110 (spacing 5 mm)

UL ratings	No. 22 – 12 AWG	300 V	15 A
CSA ratings	No. 22 – 12 AWG	300 V	15 A
Approvals			

Std. pack	G	T	Poles	Part no. unmarked	Part no. marked	Part no. Color: gray	Part no. Color: black
Spacing: 5.00 mm							
100	10	5	2	25.602.2253.0	25.600.2253.0	Z5.530.0225.0	Z5.530.3225.0
100	15	10	3	25.602.2353.0	25.600.2353.0	Z5.530.0325.0	Z5.530.3325.0
50	20	15	4	25.602.2453.0	25.600.2453.0	Z5.530.0425.0	Z5.530.3425.0
50	25	20	5	25.602.2553.0	25.600.2553.0	Z5.530.0525.0	Z5.530.3525.0
50	30	25	6	25.602.2653.0	25.600.2653.0	Z5.530.0625.0	Z5.530.3625.0
50	35	30	7	25.602.2753.0	25.600.2753.0	Z5.530.0725.0	Z5.530.3725.0
50	40	35	8	25.602.2853.0	25.600.2853.0	Z5.530.0825.0	Z5.530.3825.0
50	45	40	9	25.602.2953.0	25.600.2953.0	Z5.530.0925.0	Z5.530.3925.0
50	50	45	10	25.602.3053.0	25.600.3053.0	Z5.530.1025.0	Z5.530.4025.0
50	55	50	11	25.602.3153.0	25.600.3153.0	Z5.530.1125.0	Z5.530.4125.0
50	60	55	12	25.602.3253.0	25.600.3253.0	Z5.530.1225.0	Z5.530.4225.0
50	65	60	13	25.602.3353.0	25.600.3353.0	Z5.530.1325.0	Z5.530.4325.0
50	70	65	14	25.602.3453.0	25.600.3453.0	Z5.530.1425.0	Z5.530.4425.0
50	75	70	15	25.602.3553.0	25.600.3553.0	Z5.530.1525.0	Z5.530.4525.0
50	80	75	16	25.602.3653.0	25.600.3653.0	Z5.530.1625.0	Z5.530.4625.0
17 to 24pole upon request							
Spacing: 10.00 mm				unmarked	marked		
50	20	10	2	25.603.1253.0	25.601.1253.0	Z5.530.6225.0	Z5.530.8225.0
50	30	20	3	25.603.1353.0	25.601.1353.0	Z5.530.6325.0	Z5.530.8325.0
50	40	30	4	25.603.1453.0	25.601.1453.0	Z5.530.6425.0	Z5.530.8425.0
50	50	40	5	25.603.1553.0	25.601.1553.0	Z5.530.6525.0	Z5.530.8525.0
50	60	50	6	25.603.1653.0	25.601.1653.0	Z5.530.6625.0	Z5.530.8625.0
50	70	60	7	25.603.1753.0	25.601.1753.0	Z5.530.6725.0	Z5.530.8725.0
50	80	70	8	25.603.1853.0	25.601.1853.0	Z5.530.6825.0	Z5.530.8825.0
9 to 12pole upon request							

Rated voltages:
(spacing: 10.00 mm): VDE 0110

500 V/8 kV/3 – Overvoltage category III
800 V/8 kV/2 – Overvoltage category II
1000 V/8 kV/1 – Overvoltage category I

Material:
PC board connectors
Insulating housing: PC gray, UL 94-V-0
Clamping body: nickel-plated brass
Clamping screws: zinc-plated steel
Contact spring: tin-plated bronze

Terminal strip header
Insulating part: PA 66/6, glass-fibre reinforced gray or black, UL 94-V-0
Contact pin: tin-plated brass

Accessories

wiecon

Spacing: 5.00 mm

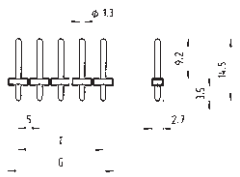

Spacing: 10.00 mm

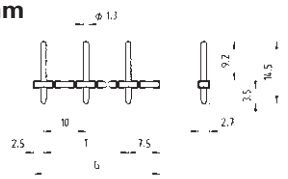

Color: black
Solder pin Ø 1.0 mm
Bore hole Ø 1.3 mm

Color: black
Solder pin Ø 1.3 mm
Bore hole Ø 1.6 mm

Terminal strip header

horizontal mount

vertical mount

horizontal mount

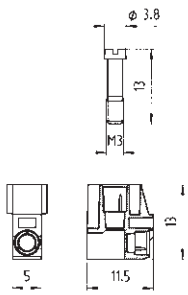

Bore hole plan for fixing brackets vertical mount

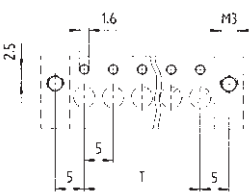

Bore hole plan for fixing brackets horizontal mount

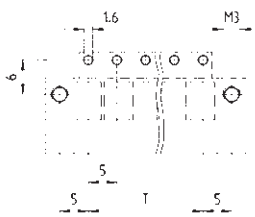

Part no.	Part no.
Color: black	Color: black
Z5.540.0225.0 Z5.540.0325.0 Z5.540.0425.0	Z5.540.3225.0 Z5.540.3325.0 Z5.540.3425.0
Z5.540.0525.0 Z5.540.0625.0 Z5.540.0725.0	Z5.540.3525.0 Z5.540.3625.0 Z5.540.3725.0
Z5.540.0825.0 Z5.540.0925.0 Z5.540.1025.0	Z5.540.3825.0 Z5.540.3925.0 Z5.540.4025.0
Z5.540.1125.0 Z5.540.1225.0 Z5.540.1325.0	Z5.540.4125.0 Z5.540.4225.0 Z5.540.4325.0
Z5.540.1425.0 Z5.540.1525.0 Z5.540.1625.0	Z5.540.4425.0 Z5.540.4525.0 Z5.540.4625.0
Z5.540.6225.0 Z5.540.6325.0 Z5.540.6425.0	Z5.540.8225.0 Z5.540.8325.0 Z5.540.8425.0
Z5.540.6525.0 Z5.540.6625.0 Z5.540.6725.0	Z5.540.8525.0 Z5.540.8625.0 Z5.540.8725.0
Z5.540.6825.0	Z5.540.8825.0

	Part no.	Std. pack
Fixing brackets: Insulating material PA 66/6 gray, Screw M 3, zinc-plated steel		
	Z5.523.7653.0	100
Coding piece strip		
Color: white	05.561.9453.0	25
Color: white	05.561.9453.5	25
Cover/marking strip 12 poles		

	Part no.	Std. pack
	Z5.523.7653.0	100
Coding piece strip		
Color: white	05.561.9453.0	25
Color: orange	05.561.9453.5	25

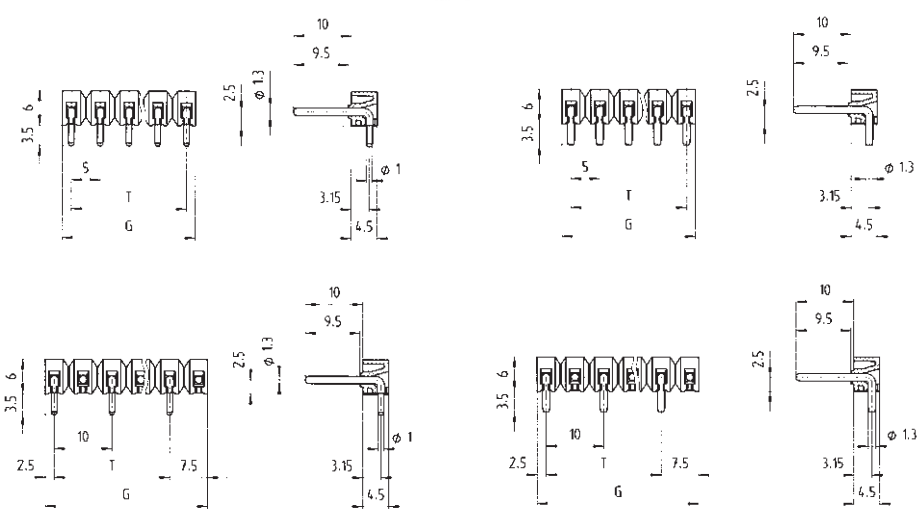

wiecon

PC board connectors, pluggable, spacing: 5.08 mm

wiecon PCB

codable

1,5 mm²

Rated cross section:
1.5 mm²

Rated current:
10 A

Connection range:
0.14 – 2.5 mm² solid/
0.14 – 1.5 mm² fine stranded

200 V/4 kV/3 – Overvoltage category III
250 V/4 kV/2 – Overvoltage category II
1000 V/4 kV/1 – Overvoltage category I

Statement of Conformity/CH

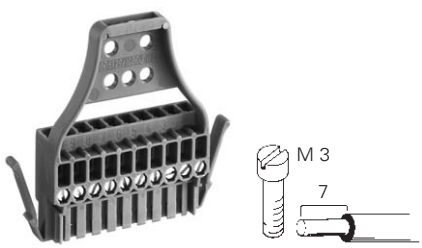

Solder pin Ø 1.3 mm
Bore hole Ø 1.6 mm

	TOP connector, 10pole Type ST 29/10 BC plug-in 90° to wire entry			Terminal strip header vertical mount		
Rated voltages: VDE 0110 EN 60 998-1, EN 60 998-2-1	1.5 mm²	250 V	10 A		250 V	10 A
UL ratings	No. 22 – 14 AWG	300 V	5 A	(if all terminals carry current)		10 A
CSA ratings	No. 22 – 14 AWG	300 V	5 A		300 V	5 A
Approvals						

Poles	Type	Part no.	Std. pack	Type	Part no.	Std. pack
Spacing: 5.08 mm						
10	ST 29/10 BC	93.101.2053.0	50		Z5.599.9025.0	50

Material:
PC board connectors
Insulating housing: PA 66/6 gray, UL 94-V-2
Clamping body: nickel-plated brass
Clamping screws: zinc-plated steel
Contact spring: tin-plated bronze

Terminal strip header
Insulating part: PBT, glass-fibre reinforced gray, UL 94-V-0
Contact pin: tin-plated brass

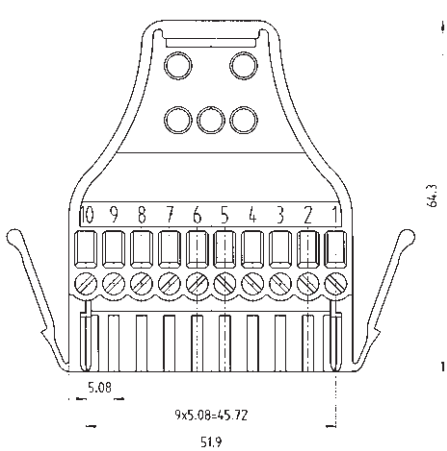

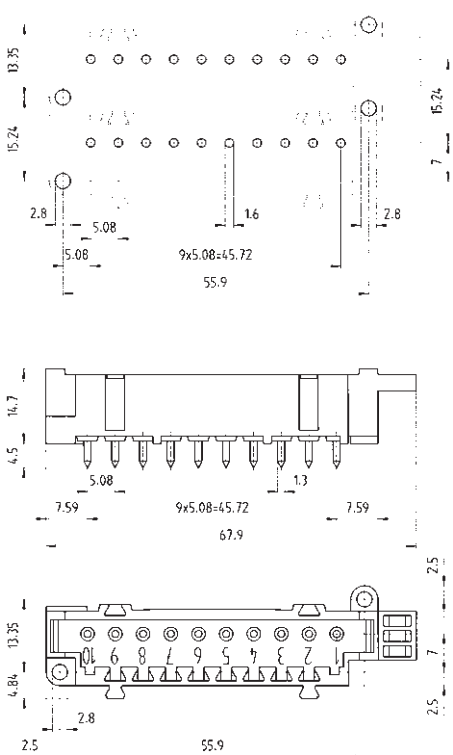

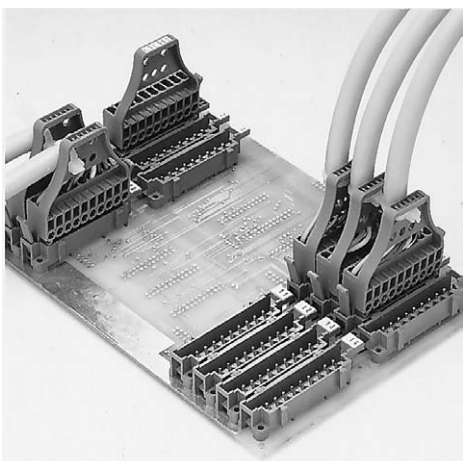

Accessories	Type	Part no.	Std. pack
Coding pieces, 10 codings each per strip		05.599.8053.0	100
Marking tag, unmarked	9705 A	04.242.0850.0	500
marked	9705 AB	04.842.0850.0	500

Coding plan
L = PC board connector
S = terminal strip header

Combination 01	S	L	L	L	L	L	L	S
Combination 02	S	L	L	L	L	L	S	L
Combination 03	S	L	L	L	L	S	L	L
Combination 04	S	L	L	L	S	L	L	L
Combination 05	S	L	L	S	L	L	L	L
Combination 06	S	L	S	L	L	L	L	L
Combination 07	S	S	L	L	L	L	L	L
Combination 08	L	S	L	L	L	L	L	S
Combination 09	L	S	L	L	L	L	S	L
Combination 10	L	S	L	L	L	S	L	L
Combination 11	L	S	L	L	S	L	L	L
Combination 12	L	S	L	S	L	L	L	L
Combination 13	L	S	S	L	L	L	L	L
Combination 14	L	L	S	L	L	L	L	S

etc.

Pluggable terminal strip header with TOP connection

A special version of the TOP system is the 5.08 mm spaced terminal strip header which can be soldered into a PC board. Two mounting holes are available in order to fix the terminal strip header.
– Strain relief
– Locking device
– Marking capabilities

By means of dove-tail guides, several terminal strip headers can be snapped together, while only the outer headers of this group must be mechanically fixed on the printed circuit board. In order to guarantee the necessary stability on the printed circuit board, it is not recommended to exceed four terminal strip headers in a group.
The terminal TOP connector and terminal strip header each possess eight slots for coding to prevent mismating the TOP plug-in system.

Spring clamp connector for PC boards
Type 8520 B, pluggable design

wiecon PCB

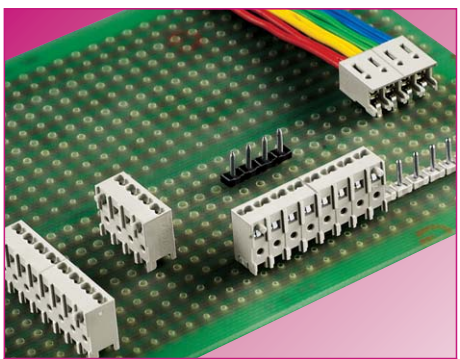

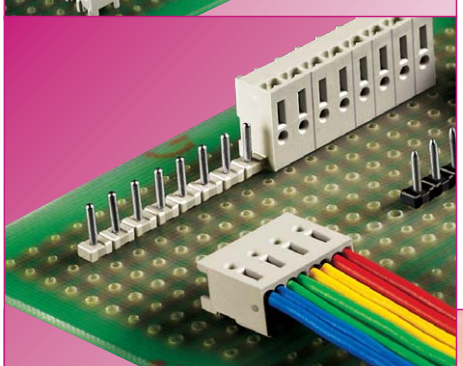

The advantage of a PC board connector with spring clamp termination is that connections to the PC board can be made in a fast and economical way. Based on this fact, Wieland Electric GmbH developed their new PC board connector type 8520.

The main field of application for this PC board connector is in communication technology, a sector which demands fast connections.

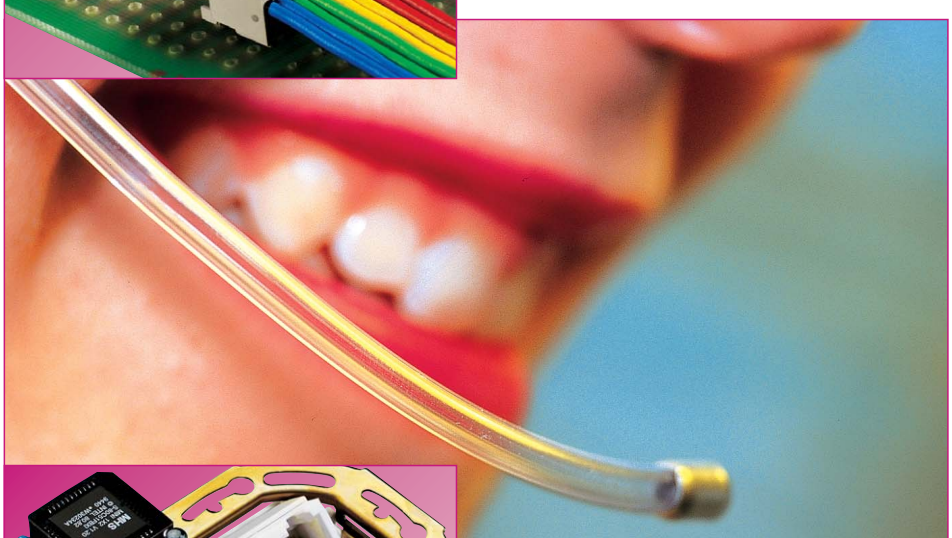

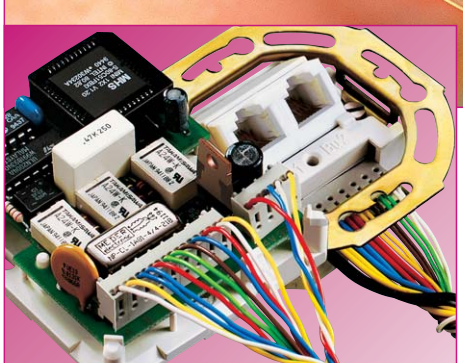

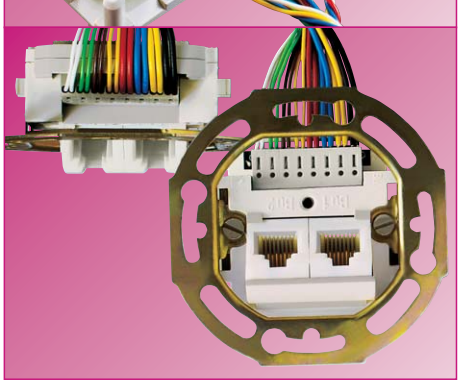

Further advantages:

- ❒ no clamping screws
- ❒ minimized wiring times
- ❒ permanent and continuous clamping forces
- ❒ vibration- and shock-proof
- ❒ maintenance-free

Different versions of type 8520 expand the spectrum of applications. It is available as a pluggable connector with matching pin strip, and in a direct mount solder version with vertical and horizontal solder pins. The rated cross section is 0.5 mm^2 solid, which makes the wiring process easy: simply push the solid conductor into the clamp, forcing it open, no tools required. The spring clamp tension will securely terminate the conductor. The spacing is 3.5 mm and the pole configerations vary between 2 and 16 poles.

		Page 324	Page 325	Page 325
		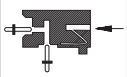	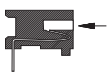	
Type		**8520 B**	**8520 BL/...W**	**8520 BL/...G**
Spacing	**mm**	**3.50/7.00**	**3.50/7.00**	**3.50/7.00**
Cross section	**mm²**	**0.25 – 0.50**	**0.25 – 0.50**	**0.25 – 0.50**
Number of poles		**2 – 16**	**2 – 16**	**2 – 16**

IERTES
O 9001
SSICHERUNGSSYSTEM
-Nr. 14 194-02

Spring clamp connector for PC boards, Type 8520, pluggable, spacings: 3.50/7.00 mm, 2 x 0.5 mm²

wiecon PCB

Rated cross section:
0.5 mm²

Rated current:
4 A

Connection range:
0.25 – 0.5 mm² solid
2 connections per pole

160 V/2.5 kV/3 – Overvoltage category III
250 V/2.5 kV/2 – Overvoltage category II
*690 V/2.5 kV/1 – Overvoltage category I

Spacing: 3.50 mm

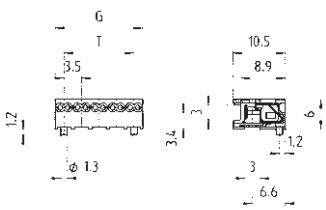

Spacing: 3.50 mm

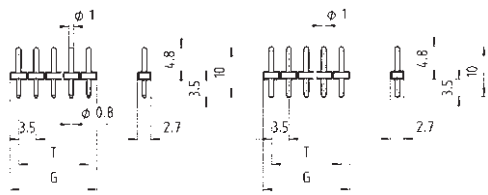

Color: gray
Solder pin Ø 0.8 mm
Bore hole Ø 1.0 mm

Color: black
Solder pin Ø 1.0 mm
Bore hole Ø 1.2 mm

* max. 600 V for ungrounded networks or expected overvoltage ≤ 3 kV for L ≥ 2.0 mm and ≤ 2.5 kV for 2.0 mm > L ≥ 1.5 mm

Type 8520 B
plug-in horizontal and vertical

Pin strip 8520 S
vertical mount

Rated voltages: VDE 0110 (Spacing: 3.5 mm)			
UL ratings	No. 24 – 20 AWG	300 V	4 A
CSA ratings	No. 24 – 20 AWG	300 V	4 A
Approvals			

Std. pack	G	T	Poles	Part no. unmarked	Part no. marked	Part no. Color: gray	Part no. Color: black
Spacing: 3.50 mm							
1000	7.0	3.5	2	25.470.0253.0	25.470.3253.0	Z5.535.0225.0	Z5.535.3225.0
1000	10.5	7.0	3	25.470.0353.0	25.470.3353.0	Z5.535.0325.0	Z5.535.3325.0
1000	14.0	10.5	4	25.470.0453.0	25.470.3453.0	Z5.535.0425.0	Z5.535.3425.0
500	17.5	14.0	5	25.470.0553.0	25.470.3553.0	Z5.535.0525.0	Z5.535.3525.0
500	21.0	17.5	6	25.470.0653.0	25.470.3653.0	Z5.535.0625.0	Z5.535.3625.0
500	24.5	21.0	7	25.470.0753.0	25.470.3753.0	Z5.535.0725.0	Z5.535.3725.0
500	28.0	24.5	8	25.470.0853.0	25.470.3853.0	Z5.535.0825.0	Z5.535.3825.0
250	31.5	28.0	9	25.470.0953.0	25.470.3953.0	Z5.535.0925.0	Z5.535.3925.0
250	35.0	31.5	10	25.470.1053.0	25.470.4053.0	Z5.535.1025.0	Z5.535.4025.0
250	38.5	35.0	11	25.470.1153.0	25.470.4153.0	Z5.535.1125.0	Z5.535.4125.0
250	42.0	38.5	12	25.470.1253.0	25.470.4253.0	Z5.535.1225.0	Z5.535.4225.0
250	45.5	42.0	13	25.470.1353.0	25.470.4353.0	Z5.535.1325.0	Z5.535.4325.0
250	49.0	45.5	14	25.470.1453.0	25.470.4453.0	Z5.535.1425.0	Z5.535.4425.0
250	52.5	49.0	15	25.470.1553.0	25.470.4553.0	Z5.535.1525.0	Z5.535.4525.0
250	56.0	52.5	16	25.470.1653.0	25.470.4653.0	Z5.535.1625.0	Z5.535.4625.0
Spacing: 7.00 mm			upon request				

Rated voltages:
(spacing: 7.00 mm): VDE 0110

400 V/6 kV/3 – Overvoltage category III
690 V/6 kV/2 – Overvoltage category II
1000 V/6 kV/1 – Overvoltage category I

Material:
PC board connectors
Insulating housing: PA 66/6, UL 94-V0
Clamping spring: special copper alloys
tin-plated

Pin strips
Insulating part: PA 66/6, glass-fibre reinforced
gray or black, UL 94-V-0
Contact pin: tin-plated brass

Spring clamp connector for PC boards, Type 8520 BL, direct mount spring clamp Spacings: 3.50/7.00 mm, 2 x 0.5 mm²

Rated cross section:
0.5 mm²

Rated current:
4 A

Connection range:
0.25 – 0.5 mm² solid
2 connections per pole

160 V/2.5 kV/3 – Overvoltage category III
250 V/2.5 kV/2 – Overvoltage category II
*690 V/2.5 kV/1 – Overvoltage category I

Spacing: 3.50 mm

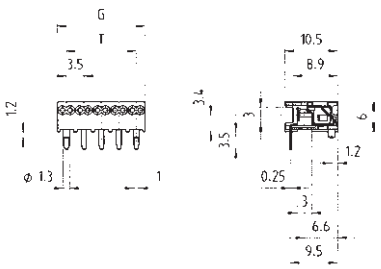

Spacing: 3.50 mm

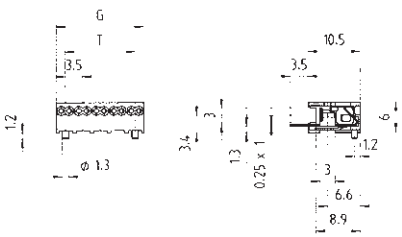

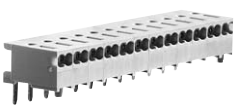

Solder pin 0.25 x 1.0 mm
Bore hole Ø 1.1 mm

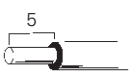

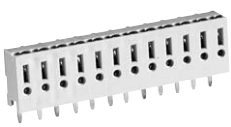

* max. 600 V ungrounded networks or expected overvoltage ≤ 3 kV for L ≥ 2.0 mm and ≤ 2.5 kV for 2.0 mm > L ≥ 1.5 mm

Type 8520 BL/...W
Wire horizontal to PC board

Type 8520 BL/...G
Wire vertical to PC board

Rated voltages: VDE 0110					
UL ratings	No. 24 – 20 AWG	300 V	4 A	No. 24 – 20 AWG	300 V	4 A
CSA ratings	No. 24 – 20 AWG	300 V	4 A	No. 24 – 20 AWG	300 V	4 A
Approvals pending					

Std. pack	G	T	Poles	Part no. unmarked	Part no. marked	Part no. unmarked	Part no. marked
Spacing: 3.50 mm							
1000	7.0	3.5	2	25.471.0253.0	25.471.3253.0	25.472.0253.0	25.472.3253.0
1000	10.5	7.0	3	25.471.0353.0	25.471.3353.0	25.472.0353.0	25.472.3353.0
1000	14.0	10.5	4	25.471.0453.0	25.471.3453.0	25.472.0453.0	25.472.3453.0
500	17.5	14.0	5	25.471.0553.0	25.471.3553.0	25.472.0553.0	25.472.3553.0
500	21.0	17.5	6	25.471.0653.0	25.471.3653.0	25.472.0653.0	25.472.3653.0
500	24.5	21.0	7	25.471.0753.0	25.471.3753.0	25.472.0753.0	25.472.3753.0
500	28.0	24.5	8	25.471.0853.0	25.471.3853.0	25.472.0853.0	25.472.3853.0
250	31.5	28.0	9	25.471.0953.0	25.471.3953.0	25.472.0953.0	25.472.3953.0
250	35.0	31.5	10	25.471.1053.0	25.471.4053.0	25.472.1053.0	25.472.4053.0
250	38.5	35.0	11	25.471.1153.0	25.471.4153.0	25.472.1153.0	25.472.4153.0
250	42.0	38.5	12	25.471.1253.0	25.471.4253.0	25.472.1253.0	25.472.4253.0
250	45.5	42.0	13	25.471.1353.0	25.471.4353.0	25.472.1353.0	25.472.4353.0
250	49.0	45.5	14	25.471.1453.0	25.471.4453.0	25.472.1453.0	25.472.4453.0
250	52.5	49.0	15	25.471.1553.0	25.471.4553.0	25.472.1553.0	25.472.4553.0
250	56.0	52.5	16	25.471.1653.0	25.471.4653.0	25.472.1653.0	25.472.4653.0

Spacing: 7.00 mm upon request

Rated voltages:
(Spacing: 7.00 mm): VDE 0110

400 V/6 kV/3 – Overvoltage category III
690 V/6 kV/2 – Overvoltage category II
1000 V/6 kV/1 – Overvoltage category I

Bore hole plan, 3.50/7.00 mm spacing with angled solder pin and fixing bolts:

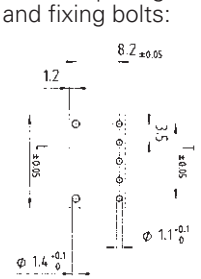

PC board connectors
edge card pluggables

wiecon PCB

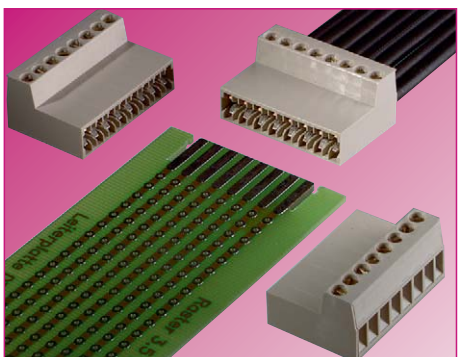

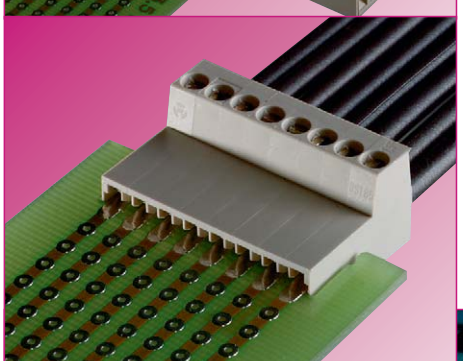

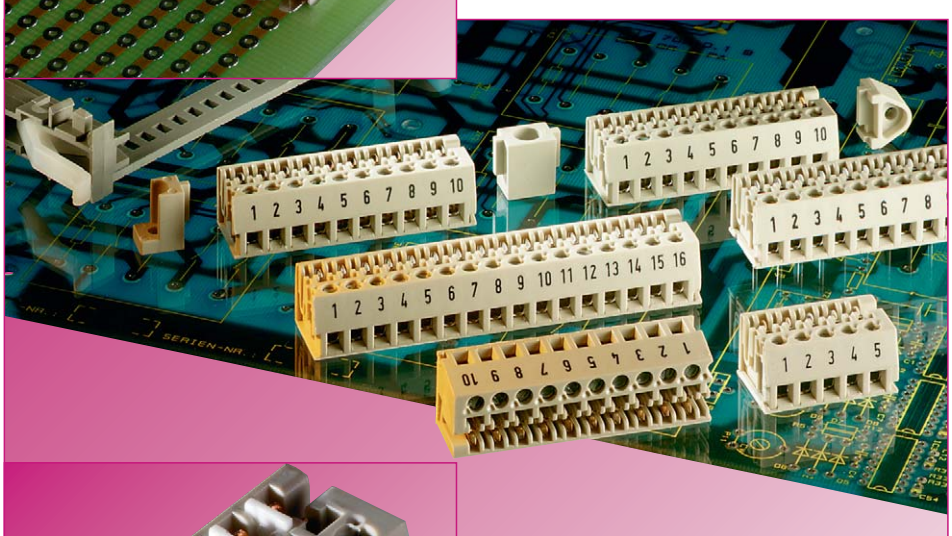

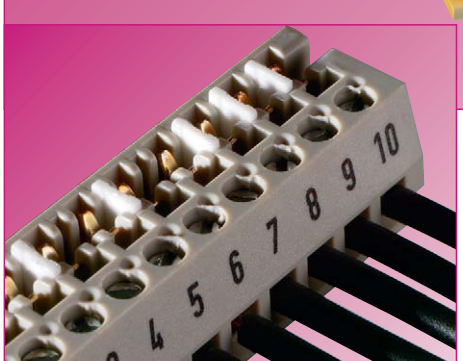

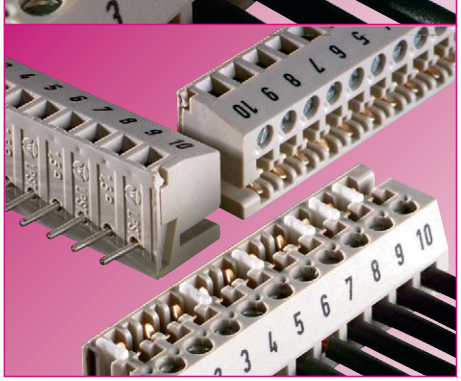

Edge card pluggables offer the advantages of standard pluggable connectors, but without the requirement of the mounting header.

System features

- ❒ installation and maintenance friendly
- ❒ easy-to-operate screw termination
- ❒ quick disconnect
- ❒ clear, organized wiring
- ❒ thickness of PC board: 1.4 mm to 1.8 mm
- ❒ floating contact springs
- ❒ secure, robust clamping mechanism

Coding

- ❒ coding without pole loss
- ❒ PC board with coding slots accept coding pieces inserted into the plug

Marking

- ❒ smudge-proof inkjet marking directly on the connector
- ❒ custom marking possible, consult factory
- ❒ clear, easily legible marking

Variety of types

- ❒ in 3.5 mm and 5 mm spacing
- ❒ pole configurations from 2 to 24 poles
- ❒ cross sections up to 1.5 mm^2
- ❒ with open side walls: snap together adjacently. or with closed side walls: prevent mis-mating
- ❒ with or without solder pins

Fixing brackets

- ❒ for secure connection of printed circuit board and connector
- ❒ special fixing brackets as guides for large PC boards. With fixing bolts on the sides at the top and bottom which fix backing strips creating a stable guiding frame.

Material

Metal parts:

- ❒ made from special alloys and/or special surface treatments
- ❒ minimum feed through resistance
- ❒ high corrosion resistance

Insulating housings:

- ❒ use of high-quality polyamide for its excellent electrical, mechanical and chemical characteristics (see ***facts*** & DATA: Technical information)
- ❒ materials as per US standard UL 94-V-0
- ❒ colors: gray, similar to RAL 7032

Note:

The information regarding cross sectional areas and connection types pertains to connections without ferrules.

The indicated rated current corresponds to the maximum load for the PC board connector with a connected wire of the indicated rated cross section.

The rated voltage is indicated as per DIN VDE 0110 part 1 (IEC 60 664-1) – insulation coordinates for electrical material in low voltage application – and refers to the delivered state of the PC board connector.

Before the PC board is fitted with connectors, an appropriate PC board must be selected and dimensioned accordingly (e.g. regarding tracking resistance of the printed circuit board, distances of the leads and solder joints).

Furthermore, the ambient conditions under which the materials shall be used, must be considered.

The indicated rated voltages will be valid for the complete module only if the printed circuit board and its connectors are correctly and clearly adjusted to each other.

Abbreviations for plastic materials:

PA 66/6 = Polyamide 66/6
PC = Polycarbonate
PBT = Polybutylenterephthalate

wiecon

		Page 328	Page 328	Page 330	Page 330
		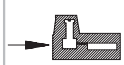			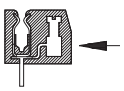
Type		**DST 85**	**DSTLF 85**	**LPST 1**	**LPSTL 1**
Spacing	**mm**	**3.50**	**3.50**	**5.00**	**5.00**
Cross section	**mm²**	**1.5**	**1.5**	**2.5**	**2.5**
Number of poles		**2 – 24**	**2 – 24**	**2 – 20**	**2 – 20**

For all solderable PC board terminals it is important that recommended torque values are not exceeded.

IERTES
O 9001
SSICHERUNGSSYSTEM
-Nr. 14 194-02

PC board connectors
edge card pluggables, spacing: 3.50 mm

wiecon PCB

Rated cross section:
1.5 mm²

Rated current:
6 A

Connection range:
0.14 – 1.5 mm² solid/fine stranded

125 V/2.5 kV/3 – Overvoltage category III
250 V/2.5 kV/2 – Overvoltage category II
*690 V/2.5 kV/1 – Overvoltage category I

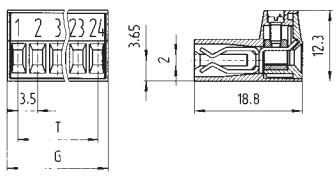

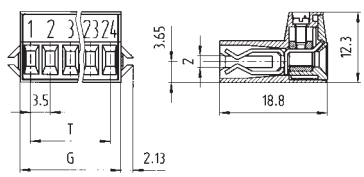

* max. 600 V for ungrounded networks or expected overvoltage ≤ 3 kV for L ≥ 2.0 mm and ≤ 2.5 kV for 2.0 mm > L ≥ 1.5 mm

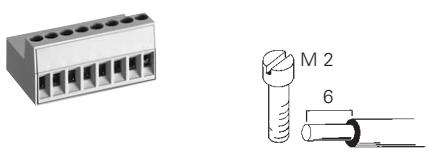

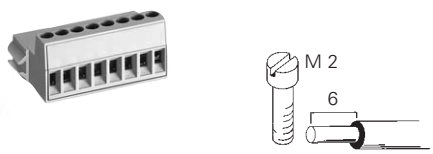

	Type DST 85 plug-in 180° to wire entry			**Type DST LF 85** plug-in 180° to wire entry		
Rated voltages: VDE 0110						
UL ratings	No. 30 – 14 AWG	300 V	6 A	No. 30 – 14 AWG	300 V	6 A
CSA ratings	No. 30 – 14 AWG	300 V	6 A	No. 30 – 14 AWG	300 V	6 A
Approvals						

Std. pack	G	T	Poles	Part no. unmarked	Part no. marked	Part no. unmarked	Part no. marked
Spacing: 3.50 mm							
100	7.1	3.4	2	25.003.0253.0	25.002.0253.0	25.005.0253.0	25.004.0253.0
100	10.5	6.8	3	25.003.0353.0	25.002.0353.0	25.005.0353.0	25.004.0353.0
50	14.0	10.3	4	25.003.0453.0	25.002.0453.0	25.005.0453.0	25.004.0453.0
50	17.5	13.8	5	25.003.0553.0	25.002.0553.0	25.005.0553.0	25.004.0553.0
50	21.0	17.3	6	25.003.0653.0	25.002.0653.0	25.005.0653.0	25.004.0653.0
50	24.5	20.8	7	25.003.0753.0	25.002.0753.0	25.005.0753.0	25.004.0753.0
50	28.0	24.3	8	25.003.0853.0	25.002.0853.0	25.005.0853.0	25.004.0853.0
50	31.5	27.8	9	25.003.0953.0	25.002.0953.0	25.005.0953.0	25.004.0953.0
50	35.0	31.3	10	25.003.1053.0	25.002.1053.0	25.005.1053.0	25.004.1053.0
50	38.5	34.8	11	25.003.1153.0	25.002.1153.0	25.005.1153.0	25.004.1153.0
50	42.0	38.3	12	25.003.1253.0	25.002.1253.0	25.005.1253.0	25.004.1253.0
only available up to 12pole							

Thickness of PC board: 1.4 mm – 1.8 mm

Material:
PC board connectors
Insulating housing: PA 66/6 gray, UL 94-V0
Clamping body: nickel-plated brass
Clamping screw: zinc-plated steel
Contact spring: tin-plated bronze

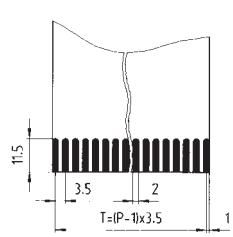

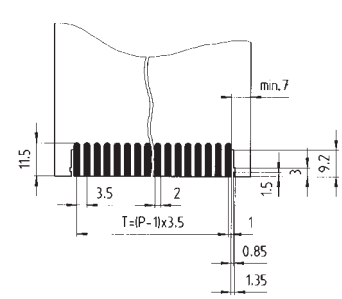

wiecon

PC board connector
card edge design, spacing: 5.00 mm

wiecon PCB

Rated cross section:
2.5 mm²

Rated current:
5 A

Connection range:
0.14 – 4.0 mm² solid/
0.14 – 2.5 mm² fine stranded

200 V/4 kV/3 – Overvoltage category III
320 V/4 kV/2 – Overvoltage category II
1000 V/4 kV/1 – Overvoltage category I

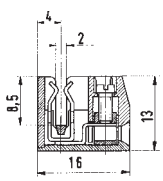

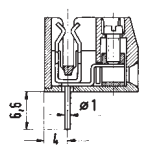

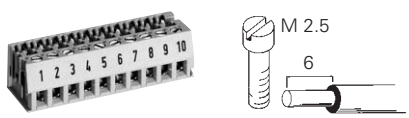

without solder connection for PC boards

Type LPST 1
plug-in 90° to wire entry

with solder connection for PC boards

Type LPSTL 1
plug-in 90° to wire entry

Rated voltages VDE 0110				
UL ratings	No. 22 – 14 AWG	300 V	5 A	No. 22 – 14 AWG 300 V 5 A
CSA ratings	No. 22 – 14 AWG	300 V	5 A	No. 22 – 14 AWG 300 V 5 A
Approvals				

Std. pack	U	G	T	Poles	Part no. marked	Part no. unmarked	Part no. marked
Spacing: 5.00 mm							
100	25	14	5	2	25.000.0256.0	25.010.0256.0	25.001.0256.0
100	30	19	10	3	25.000.0356.0	25.010.0356.0	25.001.0356.0
50	35	24	15	4	25.000.0456.0	25.010.0456.0	25.001.0456.0
50	40	29	20	5	25.000.0556.0	25.010.0556.0	25.001.0556.0
50	45	34	25	6	25.000.0656.0	25.010.0656.0	25.001.0656.0
50	50	39	30	7	25.000.0756.0	25.010.0756.0	25.001.0756.0
50	55	44	35	8	25.000.0856.0	25.010.0856.0	25.001.0856.0
50	60	49	40	9	25.000.0956.0	25.010.0956.0	25.001.0956.0
50	65	54	45	10	25.000.1056.0	25.010.1056.0	25.001.1056.0
50	70	59	50	11	25.000.1156.0	25.010.1156.0	25.001.1156.0
50	75	64	55	12	25.000.1256.0	25.010.1256.0	25.001.1256.0
50	80	69	60	13	25.000.1356.0	25.010.1356.0	25.001.1356.0
50	85	74	65	14	25.000.1456.0	25.010.1456.0	25.001.1456.0
50	90	79	70	15	25.000.1556.0	25.010.1556.0	25.001.1556.0
50	95	84	75	16	25.000.1656.0	25.010.1656.0	25.001.1656.0
				17 to 20pole upon request			

Thickness of PC board: 1.4 mm – 1.8 mm

Material:
PC board connectors
Insulating housing: PBT, glass-fibre reinforced
gray, UL 94-V-2
Clamping body: nickel-plated brass
Clamping screw: zinc-plated steel
Contact spring: tin bronze
– LPST 1: silver-plated
– LPSTL 1: tin-plated

Accessories

wiecon

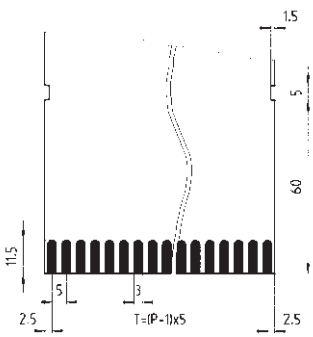

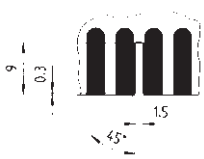

The PC board card edge connectors are fixed by means of card holders. For large printed circuit boards, card holders with guided frames are to be used.

These card holders have locking bolts at the top, the bottom and on both sides, on which backing strips can be fixed, creating a stable guide frame.

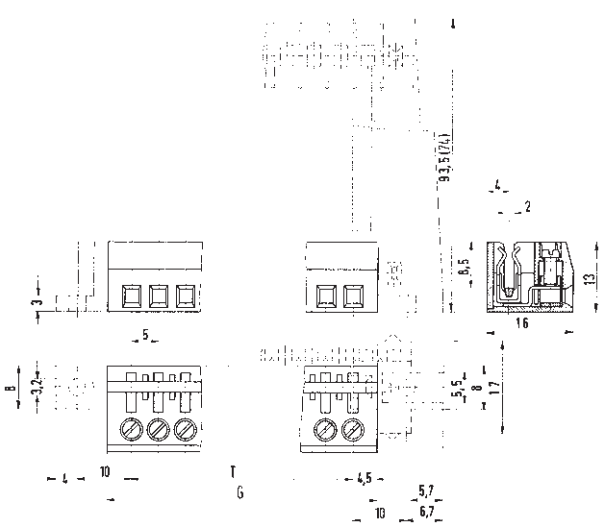

Type	Part no.	Std. pack
Card holder H 93.5 mm		
with guided frame	05.593.8853.0	100
with locking lever	05.594.3653.0	200
Card holder H 74 mm with guided frame		
with locking bolts	05.599.2853.0	100
without locking bolts	05.599.2953.0	100
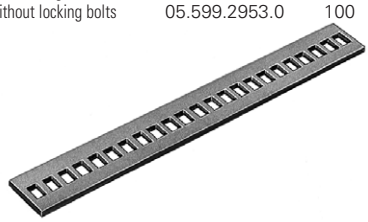		
Backing strip	07.413.3653.0	100
*		
Coding chip	05.593.7756.0	500
Card holder	05.522.7356.0	200
Card holder	05.522.7856.0	200
Middle clamp	05.522.7756.0	100

* Side walls available either on the right, or the left side or not at all, as the parts are cut to the required number of poles; therefore outside coding might not be possible.

wiecon PCB

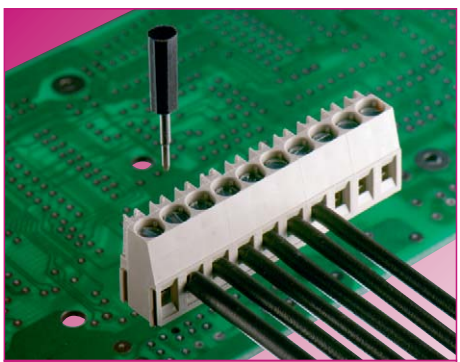

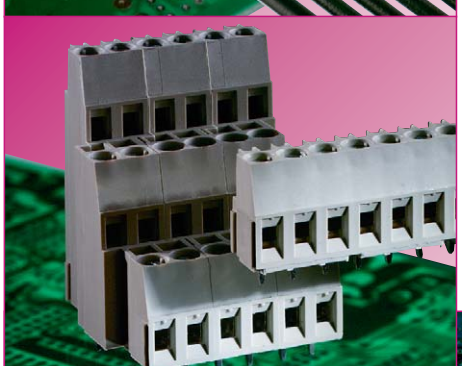

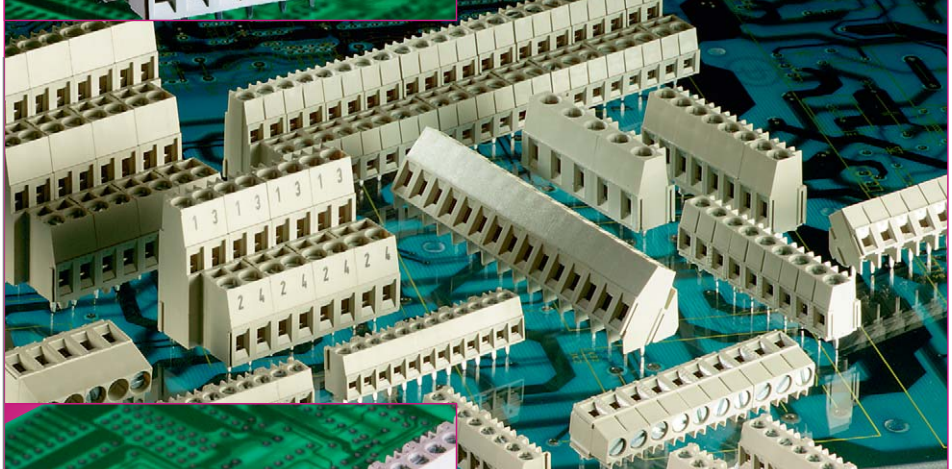

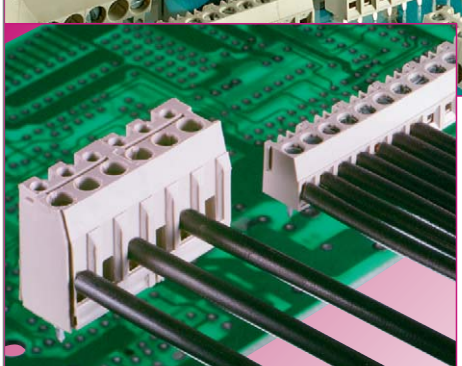

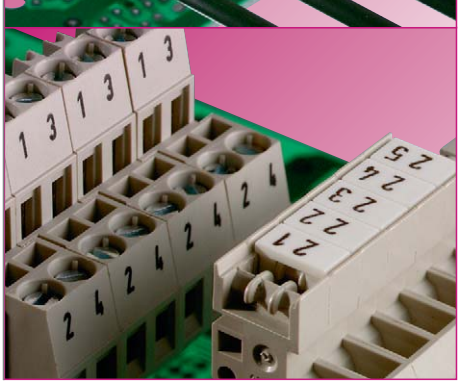

System features

- ❒ easy-to-operate application-specific connections
- ❒ connector soldered directly onto the printed circuit board
- ❒ low mechanical stress on the solder joint
- ❒ clear, open wire access
- ❒ individual wire entry as per application requirements
- ❒ multiple pole configurations
- ❒ accept solid and fine stranded wires from 0.14 mm^2 to 16 mm^2
- ❒ in metric and inch spacing; inch spacing is indicated on the wire entry guide by means of a stud.
- ❒ wire clamping via rising cage clamp (elevator principle), clamping body with wire protection
- ❒ PC board connector with TOP connection
- ❒ PC board connector with spring clamp connection

Marking

- ❒ smudge-proof inkjet marking directly on the connector
- ❒ marking of individual poles with snap-on marking tag
- ❒ connectors with or without marking tag carriers
- ❒ custom marking possible, consult factory

Abbreviations for plastic materials:

PA 66/6 = Polyamide 66/6
PC = Polycarbonate
PBT = Polybutylenterephthalate

Variety of types

- ❒ pole configurations from 2 to 24 poles
- ❒ wiring horizontal and vertical to the printed circuit board
- ❒ wiring in 45° or 35° angle possible
- ❒ in metric spacing: 3.5/5/7.5/10) mm or inch spacing: 3.81/5.08/7.62/10.16/20.32 mm
- ❒ individual connectors snap together
- ❒ multi-pole, single housing blocks
- ❒ with or without insulating plate
- ❒ with or without test fixture
- ❒ with or without fixing bolts

Material

Metal parts:

- ❒ made from special alloys and/or special surface treatments
- ❒ low feed through resistance
- ❒ high corrosion resistance
- ❒ secure, consistent clamping function

Insulating housings:

- ❒ use of high-quality Polyamide 66/6 for its excellent electrical, mechanical and chemical characteristics (for specifics, see individual connectors)

DQS certificates for all product families

- ❒ quality standard as per DIN ISO 9001
- ❒ in Development, Production, Assembly
- ❒ continued control of the quality standards by means of regular internal and external quality audits
- ❒ compatible with certificates of other countries:
  - BSI Certificate, Great Britain
  - SQS Certificate, Switzerland
  - Aib-Vincotte Certificate, Belgium
  - ÖQS Certificate, Austria

wiecon

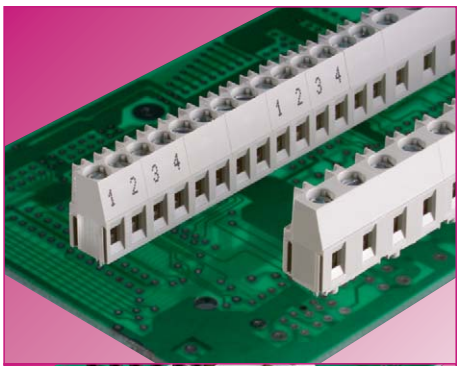

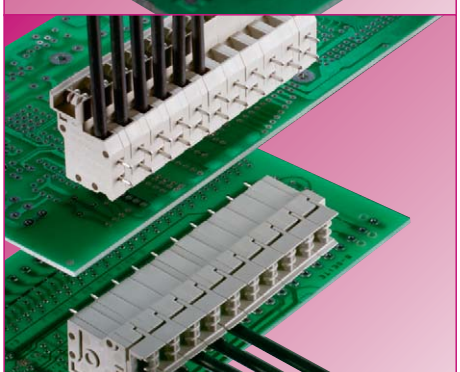

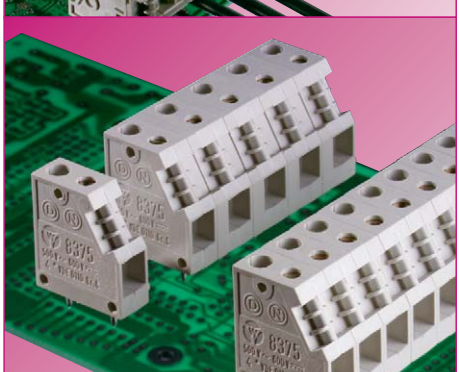

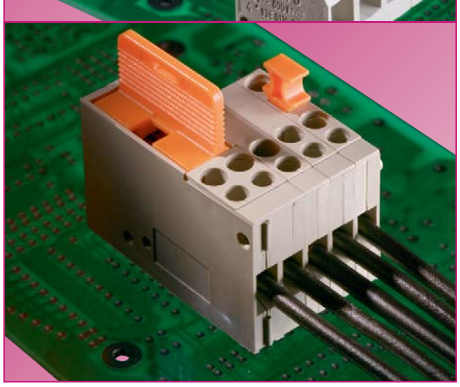

Insulating plate

- ❒ covers the clamping body with a plastic plate
- ❒ the safety values for air and creepage distances and clearances of the traces of the PC board connector are increased
- ❒ fixing bolts on the insulating plate of 2 and 3pole connectors reduce the mechanical stress on the solder joint

TOP connection

- ❒ screw termination in same plane as wire entry
- ❒ easy access for the user in narrow spaces
- ❒ snap-on marking tag carrier
- ❒ double solder tails per pole

Single pole connectors

- ❒ single connectors snap together
- ❒ secure, tight locking pins
- ❒ the spacing can be expanded by means of spacer plates
- ❒ available spacings: 5.00/5.08/6.35/7.50/7.62/10.00/10.16/20.32 mm
- ❒ with end plate
- ❒ two solder tails per pole

Special-purpose connectors

- ❒ snap together individually
- ❒ 5.08 mm spacing
- ❒ securely fixed to the printed circuit board by double solder tails
- ❒ feed through connector
- ❒ knife edge disconnect block
- ❒ fuse block with G fuse insert and integrated return conductor
- ❒ test plug for 2 mm or 3 mm test plug

Note:

The information regarding cross sectional areas and connection types pertains to connections without ferrules.

The indicated rated current corresponds to the maximum load for the PC board with connected wire of the indicated rated cross section.

The rated voltage is indicated as per DIN VDE 0110 part 1 (IEC 60 664-1) – insulation coordination for electrical material in low voltage application – and refers to the delivered state of the PC board connector.

Before the PC board is fitted with connectors, an appropriate PC board must be selected and dimensioned accordingly (e.g. regarding tracking resistance of the lines and solder joints).

Furthermore, the ambient conditions under which the materials shall be used, must be considered.

The indicated rated voltages will be valid for the complete module only if the printed circuit board and PC board connectors are correctly and clearly adjusted to each other.

wiecon PCB

PC board connectors

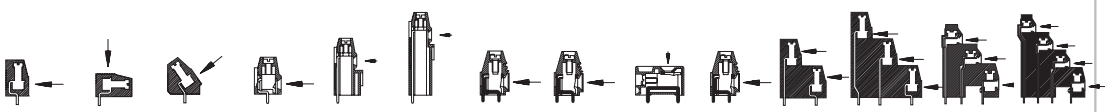

Cross section (fine stranded)	Spacing	Rising cage clamp													
1 mm²	3.50	8593 p. 336													
	3.81	8893 p. 336													
1.5 mm²	5.00/ 10.00	8192 p. 338	8192 ZW p. 339	8134 p. 360								8192 E p. 364		8195 D p. 372	8195 V p. 375
	5.08	8292 p. 338	8292 ZW p. 339	8234 p. 360	8292 H p. 341	8292 EH p. 340	8292 DH p. 340					8292 E p. 364			
	7.50														
	7.62														
2.5 mm²	5.00/ 10.00	8190 p. 358 8191 p. 344	8191 ZW p. 345	8135 p. 362								8190 E p. 368 8191 E p. 357	8191 D p. 357		
	5.00	8191 R p. 342	8191 p. 344											8195 D p. 372	8195 V p. 373
	5.08	8291 R p. 342 8291 p. 357	8291 ZW p. 357	8235 p. 357								8291 E p. 357	8291 D p. 357		
	7.50	8390 p. 359 8491 p. 346	8391 ZW p. 347												
	7.62	8491 p. 346	8491 ZW p. 347												
4 mm²	6.35														
	7.50														
	7.62														
	10.00														
10 mm²	10.16							7572 L2 p. 376	7572 L4 p. 376	7573 L2/W p. 375					
	20.32										7572 L2 p. 376				

TOP connection			Special-purpose connectors						Spring clamp connectors				
												8152 TOP V p. 348	**8152** TOP H p. 348
												8152 TOP V p. 348	**8152** TOP H p. 348
8185 TOP V p. 349	**8185** TOP H p. 350								**8158** TOP V p. 353	**8158** TOP H p. 353			
8285 TOP V p. 349	**8285** TOP H p. 350					**8276** p. 378	**8276** TKS p. 378	**8276** Si-D p. 379	**8258** TOP V p. 353	**8258** TOP H p. 353			
8385 TOP V p. 351	**8385** TOP H p. 352								**8358** TOP V p.	**8358** TOP H p.			
8485 TOP V p. 351	**8485** TOP H p. 352								**8458** TOP V p. 354	**8458** TOP H p. 354			
			7386 TOP H p. 355										
		8375 p. 374											
				8486 TOP H p. 356	**8486** TOP V p. 356								
		8375 p. 374											

IERTES
0 9001
SSICHERUNGSSYSTEM
-Nr. 14 194-02

PC board connectors, rising cage clamp system
Spacing: 3.50/3.81 mm

wiecon PCB

Rated cross section:
1.0 mm²

Rated current:
10 A

Connection range:
0.14 – 1.5 mm² solid/
0.14 – 1.0 mm² fine stranded

160 V/2.5 kV/3 – Overvoltage category III
*250 V/2.5 kV/2 – Overvoltage category II
**690 V/2.5 kV/1 – Overvoltage category I

without insulating plate

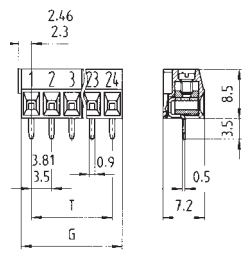

with insulating plate

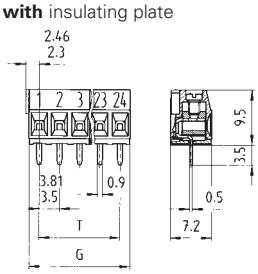

Solder pin 0.5 x 0.9 mm
Bore hole Ø 1.1 mm

* up to 400 V in overvoltage category I
or expected overvoltage ≤ 3 kV
for L ≥ 2.0 mm and ≤ 2.5 kV für 2.0 mm > L ≥ 1.5 mm

** max. 600 V overvoltage expected
overvoltage ≤ 3 kV for L ≥ 2.0 mm and
≤ 2.5 kV for 2.0 mm > L ≥ 1.5 mm

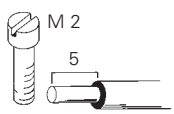

Type 8593/8893
wire horizontal to PC board

Material:
Insulating housing:
PA 66/6 gray, UL 94-V-2
Clamping body: nickel-plated brass
Contact clip with solder pin:
tin-plated bronze
Clamping screw: zinc-plated steel
Brass Nickel-plated
available upon request

Rated voltages VDE 0110		
UL ratings	No. 30 – 16 AWG	300 V 10 A
CSA ratings	No. 30 – 16 AWG	300 V 10 A
Approvals		

Std. pack	L	T	Poles	Part no.	Part no.	Part no.	Part no.
Spacing: 3.50 mm				unmarked without insulating plate	marked without insulating plate	unmarked with insulating plate with fixing bolts	marked with insulating plate with fixing bolts
100	7.0	3.5	2	25.195.0253.0	25.194.0253.0	25.195.9253.0	25.194.9253.0
100	10.5	7.0	3	25.195.0353.0	25.194.0353.0	25.195.9353.0	25.194.9353.0
50	14.0	10.5	4	25.195.0453.0	25.194.0453.0		
50	17.5	14.0	5	25.195.0553.0	25.194.0553.0		
50	21.0	17.5	6	25.195.0653.0	25.194.0653.0		
50	24.5	21.0	7	25.195.0753.0	25.194.0753.0		
50	28.0	24.5	8	25.195.0853.0	25.194.0853.0		
50	31.5	28.0	9	25.195.0953.0	25.194.0953.0		
50	35.0	31.5	10	25.195.1053.0	25.194.1053.0		
50	38.5	35.0	11	25.195.1153.0	25.194.1153.0		
50	42.0	38.5	12	25.195.1253.0	25.194.1253.0		
50	45.5	42.0	13	25.195.1353.0	25.194.1353.0		
50	49.0	45.5	14	25.195.1453.0	25.194.1453.0		
50	52.5	49.0	15	25.195.1553.0	25.194.1553.0		
50	56.0	52.5	16	25.195.1653.0	25.194.1653.0		
17 to 24pole upon request							
Spacing: 3.81 mm				unmarked without insulating plate	marked without insulating plate	unmarked with insulating plate with fixing bolts	marked with insulating plate with fixing bolts
100	7.62	3.81	2	25.197.0253.0	25.196.0253.0	25.197.9253.0	25.196.9253.0
100	11.43	7.62	3	25.197.0353.0	25.196.0353.0	25.197.9353.0	25.196.9353.0
50	15.24	11.43	4	25.197.0453.0	25.196.0453.0		
50	19.50	15.24	5	25.197.0553.0	25.196.0553.0		
50	22.86	19.05	6	25.197.0653.0	25.196.0653.0		
50	26.67	22.86	7	25.197.0753.0	25.196.0753.0		
50	30.48	26.67	8	25.197.0853.0	25.196.0853.0		
50	34.29	30.48	9	25.197.0953.0	25.196.0953.0		
50	38.10	34.29	10	25.197.1053.0	25.196.1053.0		
50	41.91	38.10	11	25.197.1153.0	25.196.1153.0		
50	45.72	41.91	12	25.197.1253.0	25.196.1253.0		
50	49.53	45.72	13	25.197.1353.0	25.196.1353.0		
50	53.34	49.53	14	25.197.1453.0	25.196.1453.0		
50	57.15	53.34	15	25.197.1553.0	25.196.1553.0		
50	60.96	57.15	16	25.197.1653.0	25.196.1653.0		
17 to 24pole upon request							

with insulating plate **with** fixing bolts

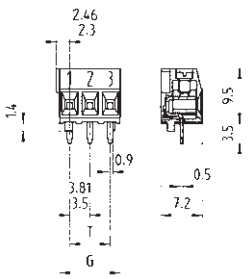

Bore hole plan for version **with** fixing bolts

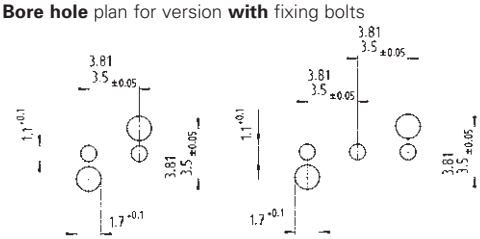

Part no.	Part no.
unmarked with insulating plate without fixing bolts	marked with insulating plate without fixing bolts
upon request	upon request
unmarked with insulating plate without fixing bolts	marked with insulating plate without fixing bolts
upon request	upon request

PC board connectors, rising cage clamp system
Spacing: 5.00/5.08 mm

wiecon PCB

Rated cross section:
1.5 mm²

Rated current:
10 A

Connection range:
0.14 – 2.5 mm² solid/
0.14 – 1.5 mm² fine stranded

250 V/4 kV/3 – Overvoltage category III
*690 V/4 kV/2 – Overvoltage category II
1000 V/4 kV/1 – Overvoltage category I

without insulating plate

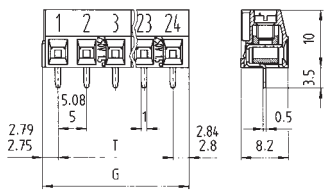

with insulating plate

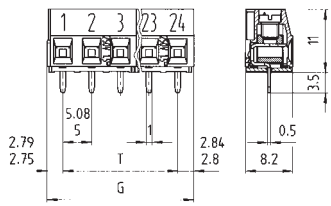

* max. 600 V for ungrounded networks or expected overvoltage ≤ 4 kV

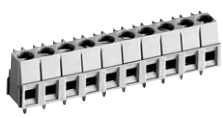

Type 8192/8292
wire horizontal to PC board

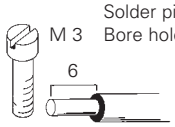

Solder pin 0.5 x 1 mm
Bore hole Ø 1.2 mm

Material:
Insulating housing:
PA 66/6 gray, UL 94-V0
Clamping body: nickel-plated brass
Contact clip with solder pin:
tin-plated bronze
Clamping screw: zinc-plated steel
Brass Nickel-plated
available upon request

Rated voltages VDE 0110		
UL ratings	No. 30 – 14 AWG	300 V 15/16 A
CSA ratings	No. 30 – 14 AWG	300 V 15 A
Approvals		

Std. pack	G	T	Poles	Part no.	Part no.	Part no.	Part no.
Spacing: 5.00 mm				unmarked without insulating plate	marked without insulating plate	unmarked with insulating plate with fixing bolts	marked with insulating plate with fixing bolts
100	10.55	5	2	25.191.0253.0	25.190.0253.0	25.191.9253.0	25.190.9253.0
100	15.55	10	3	25.191.0353.0	25.190.0353.0	25.191.9353.0	25.190.9353.0
50	20.55	15	4	25.191.0453.0	25.190.0453.0		
50	25.55	20	5	25.191.0553.0	25.190.0553.0		
50	30.55	25	6	25.191.0653.0	25.190.0653.0		
50	35.55	30	7	25.191.0753.0	25.190.0753.0		
50	40.55	35	8	25.191.0853.0	25.190.0853.0		
50	45.55	40	9	25.191.0953.0	25.190.0953.0		
50	50.55	45	10	25.191.1053.0	25.190.1053.0		
50	55.55	50	11	25.191.1153.0	25.190.1153.0		
50	60.55	55	12	25.191.1253.0	25.190.1253.0		
50	65.55	60	13	25.191.1353.0	25.190.1353.0		
50	70.55	65	14	25.191.1453.0	25.190.1453.0		
50	75.55	70	15	25.191.1553.0	25.190.1553.0		
50	80.55	75	16	25.191.1653.0	25.190.1653.0		
17 to 24pole upon request							
Spacing: 5.08 mm				unmarked without insulating plate	marked without insulating plate	unmarked with insulating plate with fixing bolts	marked with insulating plate with fixing bolts
100	10.71	5.08	2	25.193.0253.0	25.192.0253.0	25.193.9253.0	25.192.9253.0
100	15.79	10.16	3	25.193.0353.0	25.192.0353.0	25.193.9353.0	25.192.9353.0
50	20.87	15.24	4	25.193.0453.0	25.192.0453.0		
50	25.95	20.32	5	25.193.0553.0	25.192.0553.0		
50	31.03	25.40	6	25.193.0653.0	25.192.0653.0		
50	36.11	30.48	7	25.193.0753.0	25.192.0753.0		
50	41.19	35.56	8	25.193.0853.0	25.192.0853.0		
50	46.27	40.64	9	25.193.0953.0	25.192.0953.0		
50	51.35	45.72	10	25.193.1053.0	25.192.1053.0		
50	56.43	50.80	11	25.193.1153.0	25.192.1153.0		
50	61.51	55.88	12	25.193.1253.0	25.192.1253.0		
50	66.59	60.96	13	25.193.1353.0	25.192.1353.0		
50	71.67	66.04	14	25.193.1453.0	25.192.1453.0		
50	76.75	71.12	15	25.193.1553.0	25.192.1553.0		
50	81.83	76.20	16	25.193.1653.0	25.192.1653.0		
17 to 24pole upon request							

with insulating plate **with** fixing bolts

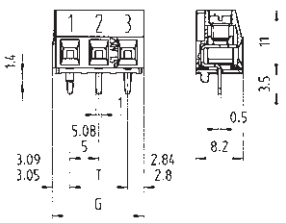

with insulating plate horizontal

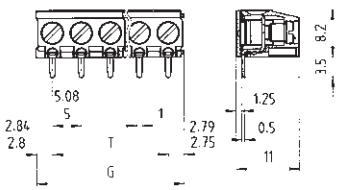

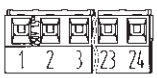

Bore hole plan for version **with** fixing bolts

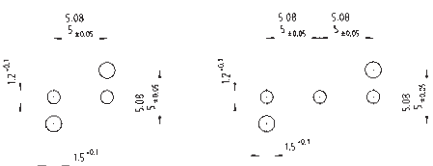

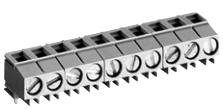

Solder pin 0.5 x 1 mm
Bore hole Ø 1.2 mm

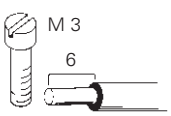

Type 8192 ZW/8292 ZW

Wire vertical to PC board

No. 30 – 14 AWG	300 V	15/16 A
No. 30 – 14 AWG	300 V	15 A

Part no.	Part no.		
unmarked with insulating plate without fixing bolts	marked with insulating plate without fixing bolts	unmarked with insulating plate horizontal	marked with insulating plate horizontal
upon request	upon request	25.191.6253.0 25.191.6353.0 25.191.6453.0	upon request
		25.191.6553.0 25.191.6653.0 25.191.6753.0	
		25.191.6853.0 25.191.6953.0 25.191.7053.0	
		25.191.7153.0 25.191.7253.0 25.191.7353.0	
		25.191.7453.0 25.191.7553.0 25.191.7653.0	
unmarked with insulating plate without fixing bolts	marked with insulating plate without fixing bolts	unmarked with insulating plate horizontal	marked with insulating plate horizontal
upon request	upon request	25.193.6253.0 25.193.6353.0 25.193.6453.0	upon request
		25.193.6553.0 25.193.6653.0 25.193.6753.0	
		25.193.6853.0 25.193.6953.0 25.193.7053.0	
		25.193.7153.0 25.193.7253.0 25.193.7353.0	
		25.193.7453.0 25.193.7553.0 25.193.7653.0	

wiecon PCB

Rated cross section:
1.5 mm²

Rated current 15 A for type 8292 DH
Rated current 15 A for type 8292 EH
Rated current 15 A for type 8292 H
(related to an ambient temperature of 20 °C, the rated cross section and max. number of poles)

Connection range:
0.5 – 1.5 mm² solid/fine stranded

250 V/4 kV/3 – Overvoltage category III
250 V/4 kV/2 – Overvoltage category II
500 V/4 kV/1 – Overvoltage category I

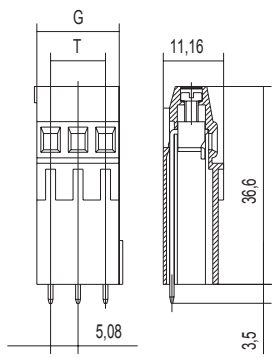

Solder pin 0.8 x 1 mm
Bore hole Ø 1.3 mm

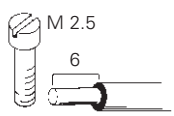

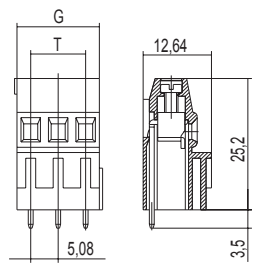

Solder pin 0.8 x 1 mm
Bore hole Ø 1.3 mm

		Type 8292 DH			Type 8292 EH		
Rated voltages VDE 0110							
UL ratings	field wiring	No. 24 – 14 AWG	300 V	10 A	No. 24 – 14 AWG	300 V	10 A
CSA ratings		No. 24 – 14 AWG	300 V	10 A	No. 24 – 14 AWG	300 V	10 A
Approvals							

Std. pack	G	T	Poles	Part no.	Part no.	Part no.	Part no.
Spacing: 5.08 mm				unmarked		unmarked	
100	10.16	5.08	2	27.000.4253.0		27.000.2253.0	
100	15.24	10.16	3	27.000.4353.0		27.000.2353.0	
				Customers are advised to ensure support for the 8292 DH		Customers are advised to ensure support for the 8292 EH	

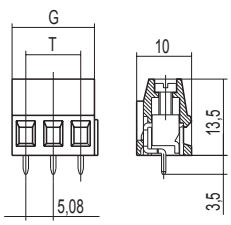

Solder pin 0.8 x 1 mm
Bore hole Ø 1.3 mm

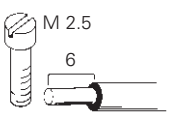

Type 8292 H

No. 24 – 14 AWG	300 V	10 A
No. 24 – 14 AWG	300 V	10 A

Part no.	Part no.
unmarked	
27.000.0253.0 27.000.0353.0	

PC board connectors, rising cage clamp system
Spacing: 5.00/5.08 mm

wiecon PCB

Rated cross section:
2.5 mm²

Rated current:
16 A

Connection range:
0.14 – 4.0 mm² solid/
0.14 – 2.5 mm² fine stranded

250 V/4 kV/3 – Overvoltage category III
*690 V/4 kV/2 – Overvoltage category II
1000 V/4 kV/1 – Overvoltage category I

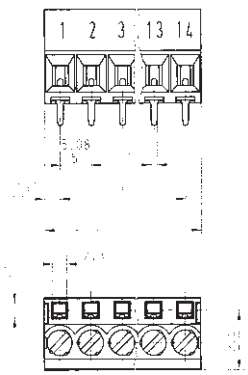

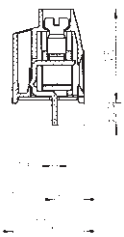

Material:
Insulating housing:
PA 66/6 gray, UL 94-V0
Clamping body: nickel-plated brass
Contact clip with solder pin:
tin-plated E copper
Clamping screw: zinc-plated steel

* max. 600 V for ungrounded networks or expected overvoltage ≤ 4 kV

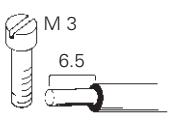

Solder pin 1 x 0.8 mm
Bore hole Ø 1.3 mm

Upon request also with Philips screw

Type 81 – 8291 R
wire horizontal to PC board
(with integrated test point)

Rated voltages VDE 0110			
UL ratings	No. 22 – 12 AWG	300 V	20/30 A
CSA ratings	No. 22 – 12 AWG	300 V	25 A
Approvals			

Std. pack	G	T	Poles	Part no.	Part no.
Spacing: 5.00 mm		**Type 8191 R**		unmarked with insulating plate	marked with insulating plate
500	10.85	5	2	25.155.0253.0	25.155.2253.0
500	15.85	10	3	25.155.0353.0	25.155.2353.0
250	20.85	15	4	25.155.0453.0	25.155.2453.0
250	25.85	20	5	25.155.0553.0	25.155.2553.0
200	30.85	25	6	25.155.0653.0	25.155.2653.0
200	35.85	30	7	25.155.0753.0	25.155.2753.0
100	40.85	35	8	25.155.0853.0	25.155.2853.0
100	45.85	40	9	25.155.0953.0	25.155.2953.0
100	50.85	45	10	25.155.1053.0	25.155.3053.0
50	55.85	50	11	25.155.1153.0	25.155.3153.0
50	60.85	55	12	25.155.1253.0	25.155.3253.0
50	66.85	60	13	25.155.1353.0	25.155.3353.0
50	70.85	65	14	25.155.1453.0	25.155.3453.0
Spacing: 5.08 mm		**Type 8291 R**		unmarked with insulating plate	marked with insulating plate
500	11.01	5.08	2	25.156.0253.0	25.156.2253.0
500	16.09	10.16	3	25.156.0353.0	25.156.2353.0
250	21.17	15.24	4	25.156.0453.0	25.156.2453.0
250	26.25	20.32	5	25.156.0553.0	25.156.2553.0
200	31.33	25.40	6	25.156.0653.0	25.156.2653.0
200	36.41	30.48	7	25.156.0753.0	25.156.2753.0
100	41.49	35.56	8	25.156.0853.0	25.156.2853.0
100	46.57	40.64	9	25.156.0953.0	25.156.2953.0
100	51.56	45.72	10	25.156.1053.0	25.156.3053.0
50	56.73	50.80	11	25.156.1153.0	25.156.3153.0
50	61.81	55.88	12	25.156.1253.0	25.156.3253.0
50	66.89	60.96	13	25.156.1353.0	25.156.3353.0
50	71.97	66.04	14	25.156.1453.0	25.156.3453.0

PC board connectors, rising cage clamp system
Spacing: 10.00/10.16 mm

Rated cross section:
2.5 mm²

Rated current:
16 A

Connection range:
0.14 – 4.0 mm² solid/
0.14 – 2.5 mm² fine stranded

690 V/8 kV/3 – Overvoltage category III
1000 V/8 kV/2 – Overvoltage category II
1000 V/8 kV/1 – Overvoltage category I

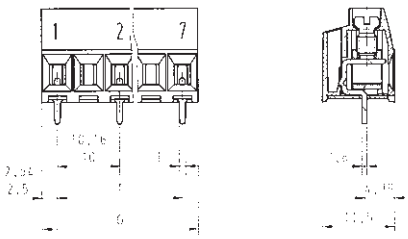

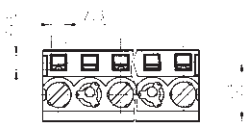

Material:
Insulating housing:
PA 66/6 gray, UL 94-V0
Clamping body: nickel-plated brass
Contact clip with solder pin:
tin-plated E copper
Clamping screw: zinc-plated steel

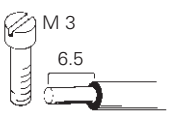

Solder pin 1 x 0.8 mm
Bore hole Ø 1.3 mm

Upon request also with Philips screw

Type 81 – 8291 R
wire horizontal to PC board
(with integrated test point, every second pole fitted)

Rated voltages VDE 0110			
UL ratings	No. 22 – 12 AWG	600 V	20/30 A
CSA ratings	No. 22 – 12 AWG	600 V	25 A
Approvals			

Std. pack	G	T	Poles	Part no.	Part no.
Spacing: 10.00 mm		**Type 8191 R**		unmarked with insulating plate	marked with insulating plate
500	15	10	2	25.157.0253.0	25.157.1253.0
250	25	20	3	25.157.0353.0	25.157.1353.0
200	35	30	4	25.157.0453.0	25.157.1453.0
100	45	40	5	25.157.0553.0	25.157.1553.0
50	55	50	6	25.157.0653.0	25.157.1653.0
50	65	60	7	25.157.0753.0	25.157.1753.0
Spacing: 10.16 mm		**Type 8291 R**		unmarked with insulating plate	marked with insulating plate
500	15.24	10.16	2	25.157.4253.0	25.157.5253.0
250	25.40	20.32	3	25.157.4353.0	25.157.5353.0
200	35.56	30.48	4	25.157.4453.0	25.157.5453.0
100	45.72	40.64	5	25.157.4553.0	25.157.5553.0
50	55.88	50.80	6	25.157.4653.0	25.157.5653.0
50	66.04	60.96	7	25.157.4753.0	25.157.5753.0

PC board connectors, rising cage clamp system
Spacing: 5.00/5.08/10.00 mm

wiecon PCB

Rated cross section:
2.5 mm²

Rated current:
16 A

Connection range:
0.14 – 4.0 mm² solid/
0.14 – 2.5 mm² fine stranded

Rated voltages:
Spacing: 5.00/5.08 mm VDE 0110
250 V/4 kV/3 – Overvoltage category III
*690 V/4 kV/2 – Overvoltage category II
1000 V/4 kV/1 – Overvoltage category I

Rated voltages:
Spacing: 10.00 mm VDE 0110
690 V/8 kV/3 – Overvoltage category III
1000 V/8 kV/2 – Overvoltage category II
1000 V/8 kV/1 – Overvoltage category I

* max. 600 V for ungrounded networks or expected overvoltage ≤ 4 kV

Spacing: 5.00/5.08 mm, without insulating plate

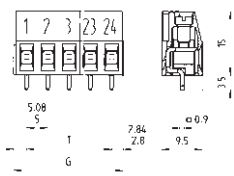

with insulating plate, **without** fixing bolts

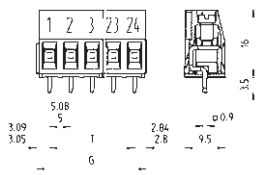

Spacing: 10.00 mm, without insulating plate

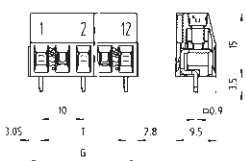

with insulating plate, **without** fixing bolts

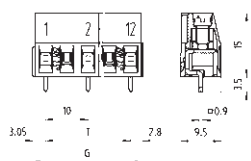

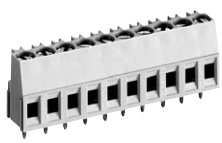

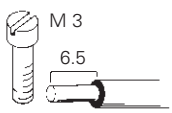

Solder pin 0.9 x 0.9 mm
Bore hole Ø 1.3 mm

Type 8191/8291
wire horizontal to PC board
(with exposed test point)

Rated voltages VDE 0110			
UL ratings	field/factory wiring	No. 22 – 12 AWG	300 V 20/30 A
CSA ratings		No. 22 – 12 AWG	300 V 25 A
Approvals			

Std. pack	G	T	Poles	Part no. unmarked without insulating plate	Part no. marked without insulating plate	Part no. unmarked with insulating plate with fixing bolts	Part no. marked with insulating plate with fixing bolts
Spacing: 5.00 mm							
100	10.85	5	2	25.161.0253.0	25.160.0253.0	25.171.0253.0	25.170.0253.0
100	15.85	10	3	25.161.0353.0	25.160.0353.0	25.171.0353.0	25.170.0353.0
50	20.85	15	4	25.161.0453.0	25.160.0453.0		
50	25.85	20	5	25.161.0553.0	25.160.0553.0		
50	30.85	25	6	25.161.0653.0	25.160.0653.0		
50	35.85	30	7	25.161.0753.0	25.160.0753.0		
50	40.85	35	8	25.161.0853.0	25.160.0853.0		
50	45.85	40	9	25.161.0953.0	25.160.0953.0		
50	50.85	45	10	25.161.1053.0	25.160.1053.0		
50	55.85	50	11	25.161.1153.0	25.160.1153.0		
50	60.85	55	12	25.161.1253.0	25.160.1253.0		
50	65.85	60	13	25.161.1353.0	25.160.1353.0		
50	70.85	65	14	25.161.1453.0	25.160.1453.0		
50	75.85	70	15	25.161.1553.0	25.160.1553.0		
50	80.85	75	16	25.161.1653.0	25.160.1653.0		
17 to 24pole upon request							
Spacing: 5.08 mm							
100	11.01	5.08	2	25.163.0253.0		25.173.0253.0	25.172.0253.0
100	16.09	10.16	3	25.163.0353.0		25.173.0353.0	25.172.0353.0
50	21.17	15.24	4	25.163.0453.0			
50	26.25	20.32	5	25.163.0553.0			
50	31.33	25.40	6	25.163.0653.0			
50	36.41	30.48	7	25.163.0753.0			
50	41.49	35.56	8	25.163.0853.0			
50	46.57	40.64	9	25.163.0953.0			
50	51.65	45.72	10	25.163.1053.0			
50	56.73	50.80	11	25.163.1153.0			
50	61.81	55.88	12	25.163.1253.0			
50	66.89	60.96	13	25.163.1353.0			
50	71.97	66.04	14	25.163.1453.0			
50	77.05	71.12	15	25.163.1553.0			
50	82.13	76.20	16	25.163.1653.0			
17 to 24pole upon request							
Spacing: 10.00 mm							
100	15.85	10	2	25.169.0253.0	25.168.0253.0	25.169.6253.0	25.168.6253.0
4 to 12pole upon requ. 50	25.85	20	3	25.169.0353.0	25.168.0353.0	25.169.6353.0	25.168.6353.0

with insulating plate **with** fixing bolts

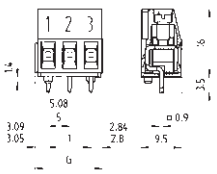

with insulating plate **with** fixing bolts

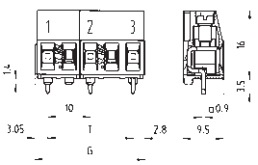

with insulating plate horizontal 5.00/5.08 mm

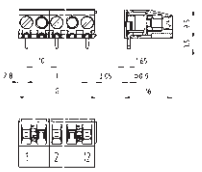

with insulating plate horizontal 10.00 mm

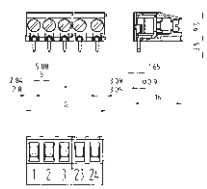

Bore hole plan for version with fixing bolts, spacing: 5.00/5.08 mm

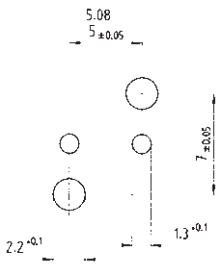

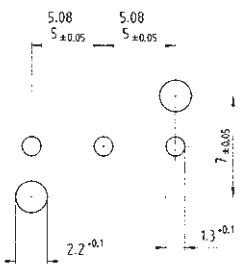

Material:
Insulating housing:
PA 66/6 gray, UL 94-V0
Clamping body: nickel-plated brass
Contact clip with solder pin:
tin-plated E copper
Clamping screw: zinc-plated steel
Brass Nickel-plated
available upon request

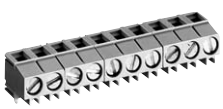

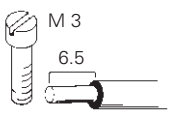

Solder pin 0.9 x 0.9 mm
Bore hole Ø 1.3 mm

Type 8191 ZW/8291 ZW

wire vertical to PC board

No. 22 – 12 AWG	300 V	20/30 A
No. 22 – 12 AWG	300 V	25 A

Bore hole plan for version **with** fixing bolts, spacing: 10.00 mm

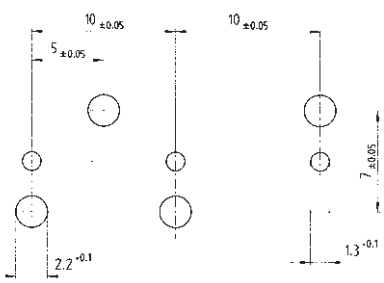

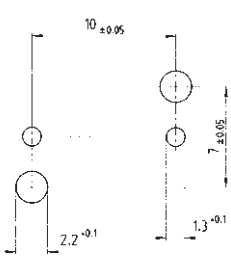

Part no.	Part no.	Part no.	Part no.
unmarked with insulating plate without fixing bolts	marked with insulating plate without fixing bolts	unmarked with insulating plate horizontal	marked with insulating plate horizontal
upon request	upon request	25.161.6253.0 25.161.6353.0 25.161.6453.0	25.160.6253.0 25.160.6353.0 25.160.6453.0
		25.161.6553.0 25.161.6653.0 25.161.6753.0	25.160.6553.0 25.160.6653.0 25.160.6753.0
		25.161.6853.0 25.161.6953.0 25.161.7053.0	25.160.6853.0 25.160.6953.0 25.160.7053.0
		25.161.7153.0 25.161.7253.0 25.161.7353.0	25.160.7153.0 25.160.7253.0 25.160.7353.0
		25.161.7453.0 25.161.7553.0 25.161.7653.0	25.160.7453.0 25.160.7553.0 25.160.7653.0
upon request	upon request	25.163.6253.0 25.163.6353.0 25.163.6453.0	25.162.6253.0 25.162.6353.0 25.162.6453.0
		25.163.6553.0 25.163.6653.0 25.163.6753.0	25.162.6553.0 25.162.6653.0 25.162.6753.0
		25.163.6853.0 25.163.6953.0 25.163.7053.0	25.162.6853.0 25.162.6953.0 25.162.7053.0
		25.163.7153.0 25.163.7253.0 25.163.7353.0	25.162.7153.0 25.162.7253.0 25.162.7353.0
		25.163.7453.0 25.163.7553.0 25.163.7653.0	25.162.7453.0 25.162.7553.0 25.162.7653.0
25.169.2253.0 25.169.2353.0	25.168.2253.0 25.168.2353.0	25.169.4253.0 25.169.4353.0	25.168.4253.0 25.168.4353.0

PC board connectors, rising cage clamp system
Spacing: 7.50/7.62 mm

wiecon PCB

Rated cross section:
2.5 mm²

Rated current:
16 A

Connection range:
0.14 – 4.0 mm² solid/
0.14 – 2.5 mm² fine stranded

400 V/6 kV/3 – Overvoltage category III
1000 V/6 kV/2 – Overvoltage category II
1000 V/6 kV/1 – Overvoltage category I

without insulating plate

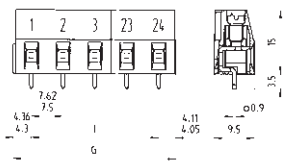

with insulating plate, **without** fixing bolts

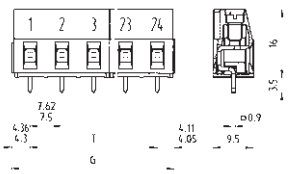

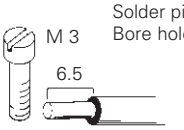

Solder pin 0.9 x 0.9 mm
Bore hole Ø 1.3 mm

Type 8391/8491
wire horizontal to PC board

Material
Insulating housing:
PA 66/6 gray, UL 94-V0
Clamping body: nickel-plated brass
Contact clip with solder pin:
tin-plated E copper
Clamping screw: zinc-plated steel
Brass Nickel-plated
available upon request

Rated voltages VDE 0110		
UL ratings	No. 22 – 12 AWG	300 V 20/30 A
CSA ratings	No. 22 – 12 AWG	300 V 25 A
Approvals		

Std. pack	G	T	Poles	Part no.	Part no.	Part no.	Part no.
Spacing: 7.50 mm				unmarked without insulating plate	unmarked with insulating plate without fixing bolts	unmarked with insulating plate with fixing bolts	marked without insulating plate
100	15.85	7.5	2	25.165.0253.0	25.165.3253.0	25.175.0253.0	25.164.0253.0
100	23.35	15.0	3	25.165.0353.0	25.165.3353.0	25.175.0353.0	25.164.0353.0
	4 to 24pole upon request						
Spacing: 7.62 mm				unmarked without insulating plate	unmarked with insulating plate without fixing bolts	unmarked with insulating plate with fixing bolts	marked without insulating plate
100	16.09	7.62	2	25.167.0253.0	25.167.3253.0	25.177.0253.0	25.166.0253.0
100	23.71	15.24	3	25.167.0353.0	25.167.3353.0	25.177.0353.0	25.166.0353.0
	4 to 24pole upon request						

with insulating plate **with** fixing bolts

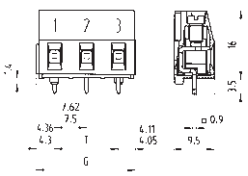

Bore hole plan for version **with** fixing bolts

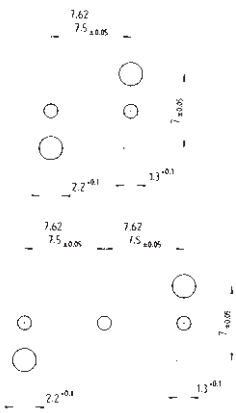

with insulating plate horizontal

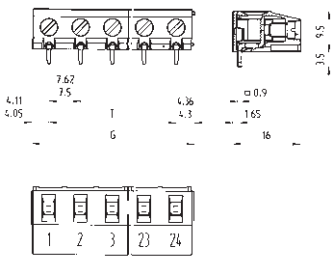

Solder pin 0.9 x 0.9 mm
Bore hole Ø 1.3 mm

Type 8391 ZW/8491 ZW

wire vertical to PC board

No. 22 – 12 AWG	300 V	20/30 A
No. 22 – 12 AWG	300 V	25 A

Part no.	Part no.	Part no.	Part no.
marked with insulating plate without fixing bolts	marked with insulating plate with fixing bolts	unmarked with insulating plate horizontal	marked with insulating plate horizontal
25.164.3253.0 25.164.3353.0	25.174.0253.0 25.174.0353.0	25.165.6253.0 25.165.6353.0	25.164.6253.0 25.164.6353.0
marked with insulating plate without fixing bolts	marked with insulating plate with fixing bolts	unmarked with insulating plate horizontal	marked with insulating plate horizontal
25.166.3253.0 25.166.3353.0	25.176.0253.0 25.176.0353.0	25.167.6253.0 25.167.6353.0	25.166.6253.0 25.166.6353.0

wiecon PCB

Rated cross section:
1.5 mm²

Rated current:
16 A
(related to an ambient temperature of 20 °C,
the rated cross section and max. number of poles)

Connection range:
0.50 – 2.5 mm² solid/
0.50 – 1.5 mm² fine stranded

250 V/4 kV/3 – Overvoltage category III

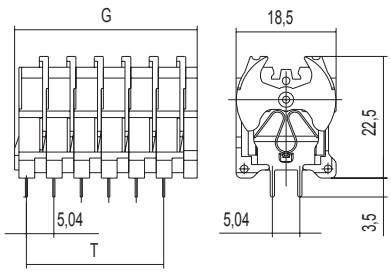

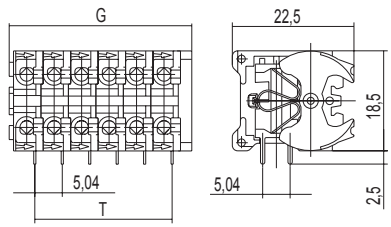

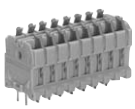

Solder pin 0.8 x 0.4 mm
Bore hole Ø 1.3 mm

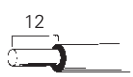

Solder pin 0.8 x 0.4 mm
Bore hole Ø 1.3 mm

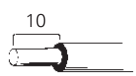

					Type 8152 TOP V		**Type 8152 TOP H**	
Rated voltages VDE 0110								
UL ratings				field wiring	No. 26 – 14 AWG	300 V 10 A	No. 26 – 14 AWG	300 V 10 A
CSA ratings					No. 22 – 14 AWG	300 V 10 A	No. 22 – 14 AWG	300 V 10 A
Approvals								
Std. pack	G	T	Poles		Part no.		Part no.	
Spacing: 5.00 mm								
100	8.34	5.04	1		27.720.0153.0		27.730.0153.0	
100	13.38	10.08	2		27.720.0253.0		27.730.0253.0	
100	18.42	15.12	3		27.720.0353.0		27.730.0353.0	
50	23.46	20.16	4		27.720.0453.0		27.730.0453.0	
50	28.50	25.20	5		27.720.0553.0		27.730.0553.0	
50	33.54	30.24	6		27.720.0653.0		27.730.0653.0	
50	38.58	35.28	7		27.720.0753.0		27.730.0753.0	
50	43.62	40.32	8		27.720.0853.0		27.730.0853.0	
50	48.66	45.30	9		27.720.0953.0		27.730.0953.0	
50	53.70	50.40	10		27.720.1053.0		27.730.1053.0	

PC board connectors, TOP connection
Spacing: 5.00/5.08 mm

Rated cross section:
2.5 mm²

Rated current:
16 A

Connection range:
0.14 – 4.0 mm² solid/
0.14 – 2.5 mm² fine stranded

250 V/4 kV/3 – Overvoltage category III
*690 V/4 kV/2 – Overvoltage category II
1000 V/4 kV/1 – Overvoltage category I

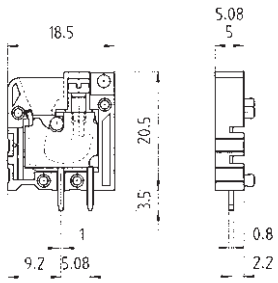

Material
Insulating housing:
PA 66/6 gray, UL 94-V0
Clamping body: zinc-plated steel
Contact clip with solder pin:
tin-plated E copper
Clamping piece: zinc-plated steel
Clamping screw: zinc-plated steel

* max. 600 V for ungrounded networks or expected overvoltage ≤ 4 kV

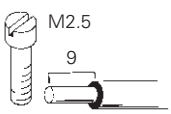

Solder pin 0.8 x 1.0 mm
Bore hole Ø 1.3 mm

	Type 8185 TOP V wire vertical to PC board	Type 8285 TOP V
Rated voltages VDE 0110		
UL ratings field/factory wiring	No. 22/30 – 12 AWG 300 V 20/25 A	No. 22/30 – 12 AWG 300 V 20/25 A
CSA ratings	No. 22 – 12 AWG 300 V 20 A	No. 22 – 12 AWG 300 V 20 A
Approvals		

		Type	Part no.	Std. pack	Type	Part no.	Std. pack
Connector assemblies		**Spacing: 5.00 mm**			**Spacing: 5.08 mm**		
	2-pole	8185 TOP V	25.741.0253.0	100	8285 TOP V	25.751.0253.0	100
	3-pole	8185 TOP V	25.741.0353.0	100	8285 TOP V	25.751.0353.0	100
	4-pole	8185 TOP V	25.741.0453.0	50	8285 TOP V	25.751.0453.0	50
	5-pole	8185 TOP V	25.741.0553.0	50	8285 TOP V	25.751.0553.0	50
	6-pole	8185 TOP V	25.741.0653.0	50	8285 TOP V	25.751.0653.0	50
	7-pole	8185 TOP V	25.741.0753.0	50	8285 TOP V	25.751.0753.0	50
	8-pole	8185 TOP V	25.741.0853.0	50	8285 TOP V	25.751.0853.0	50
	9-pole	8185 TOP V	25.741.0953.0	50	8285 TOP V	25.751.0953.0	50
	10-pole	8185 TOP V	25.741.1053.0	50	8285 TOP V	25.751.1053.0	50
	11-pole	8185 TOP V	25.741.1153.0	50	8285 TOP V	25.751.1153.0	50
	12-pole	8185 TOP V	25.741.1253.0	50	8285 TOP V	25.751.1253.0	50
	13-pole	8185 TOP V	25.741.1353.0	50	8285 TOP V	25.751.1353.0	50
	14-pole	8185 TOP V	25.741.1453.0	50	8285 TOP V	25.751.1453.0	50
	15-pole	8185 TOP V	25.741.1553.0	50	8285 TOP V	25.751.1553.0	50
	16-pole	8185 TOP V	25.741.1653.0	50	8285 TOP V	25.751.1653.0	50
Single poles, snap together							
Spacings: 5.00 and 5.08 mm	1pole	8185 TOP V	25.741.0053.0	100	8285 TOP V	25.751.0053.0	100
End plate		AP 8385 TOP N	07.300.4753.0	50	AP 8385 TOP N	07.300.4753.0	50
Marking tag carrier, snap-on	1pole		04.242.4253.0	100		04.242.4253.0	100
Marking tag carrier, snap-on, for group marking, 5.00 mm wide		BZ 8185 TOP N	04.242.5853.0	50			
Marking tag strips	unmarked	9705 A/5/10	04.242.5053.0	25			
	[1]marked	9705 A/5/10 B	04.842.5053.0	25			
Tear-off marking strip	marked 1, 2, 3 ... 0	9704 A/1-0 B	04.841.2150.0	25			
Single tag	unmarked	9705 A	04.242.0800.0				
	[1]marked	9705 AB	04.842.0850.0	500			
Adhesive marking tag strip	1 – 12 (100 x)		04.007.4089.0	1			
	13 – 24 (100 x)		04.007.4189.0	1			

[1] Marking upon request

PC board connector, TOP system
Spacing: 5.00/5.08 mm

wiecon PCB

Rated cross section:
2.5 mm²

Rated current:
16 A

Connection range:
0.14 – 4.0 mm² solid/
0.14 – 2.5 mm² fine stranded

250 V/4 kV/3 – Overvoltage category III
*690 V/4 kV/2 – Overvoltage category II
1000 V/4 kV/1 – Overvoltage category I

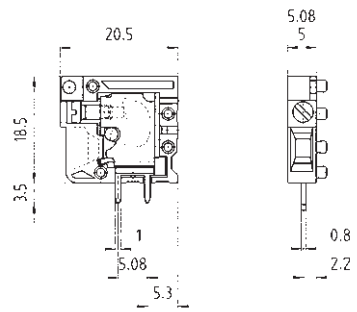

Material
Insulating housing:
PA 66/6 gray, UL 94-V0
Clamping body: zinc-plated steel
Contact clip with solder pin:
tin-plated E copper
Clamping piece: zinc-plated steel
Clamping screw: zinc-plated steel

* max. 600 V for ungrounded networks or expected overvoltage ≤ 4 kV

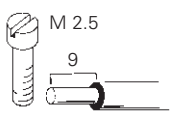

Solder pin 0.8 x 1.0 mm
Bore hole Ø 1.3 mm

	Type 8185 TOP H wire horizontal to PC board	Type 8285 TOP H
Rated voltages VDE 0110		
UL ratings field/factory wiring	No. 22/30 – 12 AWG 300 V 20/25 A	No. 22/30 – 12 AWG 300 V 20/25 A
CSA ratings	No. 22 – 12 AWG 300 V 20 A	No. 22 – 12 AWG 300 V 20 A
Approvals		

		Type	Part no.	Std. pack	Type	Part no.	Std. pack
Connector assemblies		**Spacing: 5.00 mm**			**Spacing: 5.08 mm**		
	2-pole	8185 TOP H	25.741.3253.0	100	8285 TOP H	25.751.3253.0	100
	3-pole	8185 TOP H	25.741.3353.0	100	8285 TOP H	25.751.3353.0	100
	4-pole	8185 TOP H	25.741.3453.0	50	8285 TOP H	25.751.3453.0	50
	5-pole	8185 TOP H	25.741.3553.0	50	8285 TOP H	25.751.3553.0	50
	6-pole	8185 TOP H	25.741.3653.0	50	8285 TOP H	25.751.3653.0	50
	7-pole	8185 TOP H	25.741.3753.0	50	8285 TOP H	25.751.3753.0	50
	8-pole	8185 TOP H	25.741.3853.0	50	8285 TOP H	25.751.3853.0	50
	9-pole	8185 TOP H	25.741.3953.0	50	8285 TOP H	25.751.3953.0	50
	10-pole	8185 TOP H	25.741.4053.0	50	8285 TOP H	25.751.4053.0	50
	11-pole	8185 TOP H	25.741.4153.0	50	8285 TOP H	25.751.4153.0	50
	12-pole	8185 TOP H	25.741.4253.0	50	8285 TOP H	25.751.4253.0	50
	13-pole	8185 TOP H	25.741.4353.0	50	8285 TOP H	25.751.4353.0	50
	14-pole	8185 TOP H	25.741.4453.0	50	8285 TOP H	25.751.4453.0	50
	15-pole	8185 TOP H	25.741.4553.0	50	8285 TOP H	25.751.4553.0	50
	16-pole	8185 TOP H	25.741.4653.0	50	8285 TOP H	25.751.4653.0	50
Single poles, snap together							
Spacings: 5.00 and 5.08 mm	1pole	8185 TOP H	25.741.0153.0	100	8285 TOP H	25.751.0153.0	100
End plate		AP 8385 TOP N	07.300.4753.0	50	AP 8385 TOP N	07.300.4753.0	50
Marking tag carrier, snap-on	1pole		04.242.4253.0	100		04.242.4253.0	100
Marking tag carrier, snap-on, for group marking, 5.00 mm wide		BZ 8185 TOP N	04.242.5853.0	50			
Marking tag strip	unmarked	9705 A/5/10	04.242.5053.0	25			
	[1]marked	9705 A/5/10 B	04.842.5053.0	25			
Tear-off marking strip	marked 1, 2, 3 ... 0	9704 A/1-0 B	04.841.2150.0	25			
Single tag	unmarked	9705 A	04.242.0850.0	500			
	[1]marked	9705 AB	04.842.0850.0	500			
Adhesive marking tag strip	1 – 12 (100 x)		04.007.4089.0	1			
	13 – 24 (100 x)		04.007.4189.0	1			

[1] Marking upon request

PC board connector, TOP connection
Spacing: 7.50/7.62 mm

Rated cross section:
2.5 mm²

Rated current:
16 A

Connection range:
0.14 – 4.0 mm² solid/
0.14 – 2.5 mm² fine stranded

400 V/6 kV/3 – Overvoltage category III
1000 V/6 kV/2 – Overvoltage category II
1000 V/6 kV/1 – Overvoltage category I

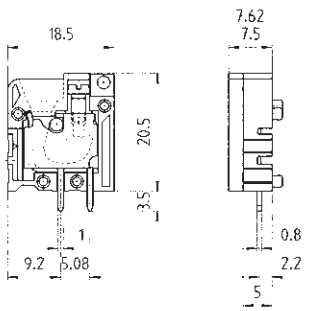

Material
Insulating housing:
PA 66/6 gray, UL 94-V0
Clamping body: zinc-plated steel
Contact clip with solder pin:
tin-plated E copper
Clamping piece: zinc-plated steel
Clamping screw: zinc-plated steel

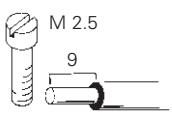

Solder pin 0.8 x 1.0 mm
Bore hole Ø 1.3 mm

	Type 8385 TOP V wire vertical to PC board			Type 8485 TOP V		
Rated voltages VDE 0110						
UL ratings field/factory wiring	No. 22/30 – 12 AWG	300 V	20/25 A	No. 22/30 – 12 AWG	300 V	20/25 A
CSA ratings	No. 22 – 12 AWG	300 V	20 A	No. 22 – 12 AWG	300 V	20 A
Approvals						

	Type	Part no.	Std. pack	Type	Part no.	Std. pack
Connector assemblies	**Spacing: 7.50 mm**			**Spacing: 7.62 mm**		
2-pole	8385 TOP V	25.761.0253.0	100	8485 TOP V	25.771.0253.0	100
3-pole	8385 TOP V	25.761.0353.0	100	8485 TOP V	25.771.0353.0	100
4-pole	8385 TOP V	25.761.0453.0	50	8485 TOP V	25.771.0453.0	50
5-pole	8385 TOP V	25.761.0553.0	50	8485 TOP V	25.771.0553.0	50
6-pole	8385 TOP V	25.761.0653.0	50	8485 TOP V	25.771.0653.0	50
7-pole	8385 TOP V	25.761.0753.0	50	8485 TOP V	25.771.0753.0	50
8-pole	8385 TOP V	25.761.0853.0	50	8485 TOP V	25.771.0853.0	50
Pre-assembled pole configurations upon request						
Single poles, snap together						
Spacings: 7.50 and 7.62 mm	8385 TOP V	25.761.0053.0	100	8485 TOP V	25.771.0053.0	100
End plate	AP 8385 TOP N	07.300.4753.0	50	AP 8385 TOP N	07.300.4753.0	50
Marking tag carrier, snap-on		04.242.4253.0	100		04.242.4253.0	100
Marking tag carrier, snap-on, for group marking, 5.00 mm wide	BZ 8185 TOP N	04.242.5853.0	50			
Marking tag strips	9705 A/7,5/10	04.242.7553.0	25			
	9705 A/7,5/10 B	04.842.7553.0	25			
Tear-off marking strips	9704 A/1-0 B	04.841.2150.0	25			
Single tags	9705 A	04.242.0850.0	500			
	9705 AB	04.842.0850.0	500			

[1] Marking upon request

PC board connector, TOP connection
Spacing: 7.50/7.62 mm

wiecon PCB

Rated cross section:
2.5 mm²

Rated current:
16 A

Connection range:
0.14 – 4.0 mm² solid/
0.14 – 2.5 mm² fine stranded

400 V/6 kV/3 – Overvoltage category III
1000 V/6 kV/2 – Overvoltage category II
1000 V/6 kV/1 – Overvoltage category I

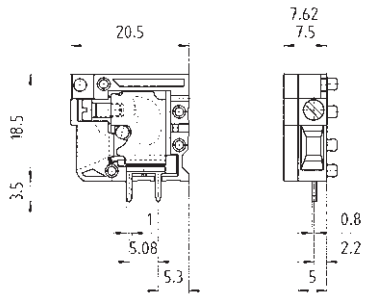

Material
Insulating housing:
PA 66/6 gray, UL 94-V0
Clamping body: zinc-plated steel
Contact clip with solder pin:
tin-plated E copper
Clamping piece: zinc-plated steel
Clamping screw: zinc-plated steel

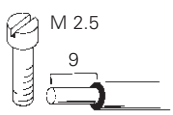

Solder pin 0.8 x 1.0 mm
Bore hole Ø 1.3 mm

		Type 8385 TOP H wire horizontal to PC board	Type 8485 TOP H
Rated voltages VDE 0110			
UL ratings	field/factory wiring	No. 22/30 – 12 AWG 300 V 20/25 A	No. 22/30 – 12 AWG 300 V 20/25 A
CSA ratings		No. 22 – 12 AWG 300 V 20 A	No. 22 – 12 AWG 300 V 20 A
Approvals			

		Type	Part no.	Std. pack	Type	Part no.	Std. pack
Connector assemblies		**Spacing: 7.50 mm**			**Spacing: 7.62 mm**		
	2pole	8385 TOP H	25.761.3253.0	100	8485 TOP H	25.771.3253.0	100
	3pole	8385 TOP H	25.761.3353.0	100	8485 TOP H	25.771.3353.0	100
	4pole	8385 TOP H	25.761.3453.0	50	8485 TOP H	25.771.3453.0	50
	5pole	8385 TOP H	25.761.3553.0	50	8485 TOP H	25.771.3553.0	50
	6pole	8385 TOP H	25.761.3653.0	50	8485 TOP H	25.771.3653.0	50
	7pole	8385 TOP H	25.761.3753.0	50	8485 TOP H	25.771.3753.0	50
	8pole	8385 TOP H	25.761.3853.0	50	8485 TOP H	25.771.3853.0	50
	Pre-assembled pole configurations upon request						
Single poles, snap together							
Spacings: 7.50 und 7.62 mm	1pole	8385 TOP H	25.761.0153.0	100	8485 TOP H	25.771.0153.0	100
End plate		AP 8385 TOP N	07.300.4753.0	50	AP 8385 TOP N	07.300.4753.0	50
Marking tag carrier, snap-on	1pole		04.242.4253.0	100		04.242.4253.0	100
Marking tag carrier, snap-on, for group marking, 5.00 mm wide		BZ 8185 TOP N	04.242.5853.0	50			
Marking tag strips	unmarked	9705 A/7,5/10	04.242.7553.0	25			
	[1]marked	9705 A/7,5/10 B	04.842.7553.0	25			
Tear-off marking strip	marked 1, 2, 3 ... 0	9704 A/1-0 B	04.841.2150.0	25			
Single tags	unmarked	9705 A	04.242.0850.0	500			
	[1]marked	9705 AB	04.842.0850.0	500			

[1] Marking upon request

PC board connector, spring clamp connection
Spacing: 5.00/5.08 mm

Rated cross section:
2.5 mm²

Rated current:
16 A

Connection range:
0.14 – 4.0 mm² solid/
0.14 – 2.5 mm² fine stranded

250 V/4 kV/3 – Overvoltage category III
*690 V/4 kV/2 – Overvoltage category II
1000 V/4 kV/1 – Overvoltage category I

Material:
Insulating housing: PA 66/6 gray, UL 94-V-0
Clamping body: spring clamp
Contact clips with solder pin:
tin-plated E copper

* max. 600 V for ungrounded networks or expected overvoltage ≤ 4 kV

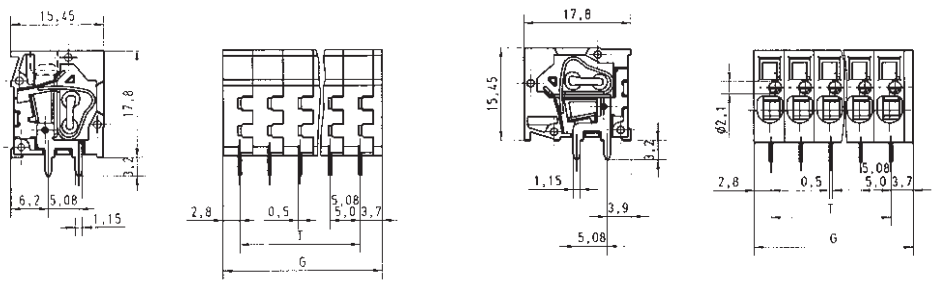

Solder pin 0.5 x 1.15 mm
Bore hole Ø 1.3 mm

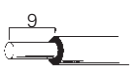

Solder pin 0.5 x 1.15 mm
Bore hole Ø 1.3 mm

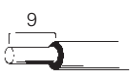

Rated voltages VDE 0110
UL ratings field/factory wiring
CSA ratings – pending
Approvals (UL + CSA pending)

	Type 8158 TOP V wire vertical to PC board	**8258 TOP V**	**Type 8158 TOP H** wire horizontal to PC board	**8258 TOP H**
	No. 22/30 – 12 AWG		No. 22/30 – 12 AWG	
	No. 22 – 12 AWG		No. 22 – 12 AWG	

		Type	Part no.	Std. pack	Type	Part no.	Std. pack
Spacing: 5.00 mm							
	2pole	8158 TOP V	25.780.0253.0	100	8158 TOP H	25.790.0253.0	100
	3pole	8158 TOP V	25.780.0353.0	100	8158 TOP H	25.790.0353.0	100
	4pole	8158 TOP V	25.780.0453.0	50	8158 TOP H	25.790.0453.0	50
	5pole	8158 TOP V	25.780.0553.0	50	8158 TOP H	25.790.0553.0	50
	6pole	8158 TOP V	25.780.0653.0	50	8158 TOP H	25.790.0653.0	50
	7pole	8158 TOP V	25.780.0753.0	50	8158 TOP H	25.790.0753.0	50
	8pole	8158 TOP V	25.780.0853.0	50	8158 TOP H	25.790.0853.0	50
	9pole	8158 TOP V	25.780.0953.0	50	8158 TOP H	25.790.0953.0	50
	10pole	8158 TOP V	25.780.1053.0	50	8158 TOP H	25.790.1053.0	50
	11pole	8158 TOP V	25.780.1153.0	50	8158 TOP H	25.790.1153.0	50
	12pole	8158 TOP V	25.780.1253.0	50	8158 TOP H	25.790.1253.0	50
	13pole	8158 TOP V	25.780.1353.0	50	8158 TOP H	25.790.1353.0	50
	14pole	8158 TOP V	25.780.1453.0	50	8158 TOP H	25.790.1453.0	50
	15pole	8158 TOP V	25.780.1553.0	50	8158 TOP H	25.790.1553.0	50
further pole numbers upon request	16pole	8158 TOP V	25.780.1653.0	50	8158 TOP H	25.790.1653.0	50
Spacing: 5.08 mm							
	2pole	8258 TOP V	25.781.0253.0	100	8258 TOP H	25.791.0253.0	100
	3pole	8258 TOP V	25.781.0353.0	100	8258 TOP H	25.791.0353.0	100
	4pole	8258 TOP V	25.781.0453.0	50	8258 TOP H	25.791.0453.0	50
	5pole	8258 TOP V	25.781.0553.0	50	8258 TOP H	25.791.0553.0	50
	6pole	8258 TOP V	25.781.0653.0	50	8258 TOP H	25.791.0653.0	50
	7pole	8258 TOP V	25.781.0753.0	50	8258 TOP H	25.791.0753.0	50
	8pole	8258 TOP V	25.781.0853.0	50	8258 TOP H	25.791.0853.0	50
	9pole	8258 TOP V	25.781.0953.0	50	8258 TOP H	25.791.0953.0	50
	10pole	8258 TOP V	25.781.1053.0	50	8258 TOP H	25.791.1053.0	50
	11pole	8258 TOP V	25.781.1153.0	50	8258 TOP H	25.791.1153.0	50
	12pole	8258 TOP V	25.781.1253.0	50	8258 TOP H	25.791.1253.0	50
	13pole	8258 TOP V	25.781.1353.0	50	8258 TOP H	25.791.1353.0	50
	14pole	8258 TOP V	25.781.1453.0	50	8258 TOP H	25.791.1453.0	50
	15pole	8258 TOP V	25.781.1553.0	50	8258 TOP H	25.791.1553.0	50
further pole numbers upon request	16pole	8258 TOP V	25.781.1653.0	50	8258 TOP H	25.791.1653.0	50
Accessories							
Adhesive marking strips	1 – 12 (100 x)		04.007.4089.0	1		04.007.4089.0	1
	13 – 24 (100 x)		04.007.4189.0	1		04.007.4189.0	1
Marking upon request							
Test plug			Z5.553.2921.0	10		Z5.553.2921.0	10

PC board connectors, spring clamp connection
Spacing: 7.50/7.62 mm

wiecon PCB

Rated cross section:
2.5 mm²

Rated current:
16 A

Connection range:
0.14 – 4.0 mm² solid/
0.14 – 2.5 mm² fine stranded

400 V/6 kV/3 – Overvoltage category III
1000 V/6 kV/2 – Overvoltage category II
1000 V/6 kV/1 – Overvoltage category I

Material:
Insulating housings: PA 66/6 gray, UL 94-V-0
Clamping body: spring clamp
Contact clip with solder pin:
tin-plated E copper

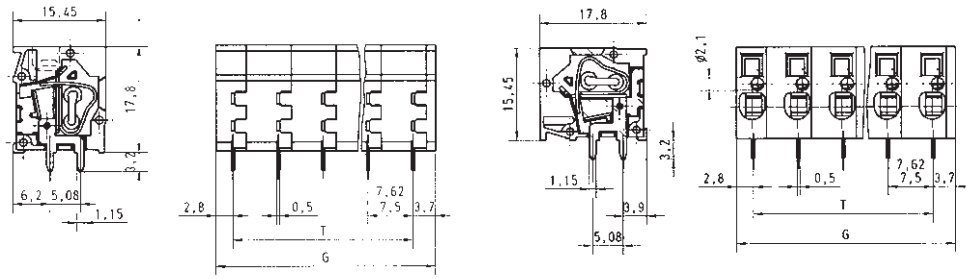

Solder pin 0.5 x 1.15 mm
Bore hole Ø 1.3 mm

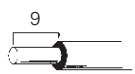

Solder pin 0.5 x 1.15 mm
Bore hole Ø 1.3 mm

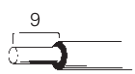

Rated voltages VDE 0110
UL ratings field/factory wiring
CSA ratings
Approvals (UL + CSA pending)

Type 8358 TOP V
wire vertical to PC board
No. 22/30 – 12 AWG
No. 22 – 12 AWG

8458 TOP V

Type 8358 TOP H
wire horizontal to PC board
No. 22/30 – 12 AWG
No. 22 – 12 AWG

8458 TOP H

		Type	Part no.	Std. pack	Type	Part no.	Std. pack
Spacing: 7.50 mm							
	2pole	8358 TOP V	25.782.0253.0	100	8358 TOP H	25.792.0253.0	100
	3pole	8358 TOP V	25.782.0353.0	100	8358 TOP H	25.792.0353.0	100
	4pole	8358 TOP V	25.782.0453.0	50	8358 TOP H	25.792.0453.0	50
	5pole	8358 TOP V	25.782.0553.0	50	8358 TOP H	25.792.0553.0	50
	6pole	8358 TOP V	25.782.0653.0	50	8358 TOP H	25.792.0653.0	50
	7pole	8358 TOP V	25.782.0753.0	50	8358 TOP H	25.792.0753.0	50
	8pole	8358 TOP V	25.782.0853.0	50	8358 TOP H	25.792.0853.0	50
	9pole	8358 TOP V	25.782.0953.0	50	8358 TOP H	25.792.0953.0	50
	10pole	8358 TOP V	25.782.1053.0	50	8358 TOP H	25.792.1053.0	50
	11pole	8358 TOP V	25.782.1153.0	50	8358 TOP H	25.792.1153.0	50
	12pole	8358 TOP V	25.782.1253.0	50	8358 TOP H	25.792.1253.0	50
	13pole	8358 TOP V	25.782.1353.0	50	8358 TOP H	25.792.1353.0	50
	14pole	8358 TOP V	25.782.1453.0	50	8358 TOP H	25.792.1453.0	50
	15pole	8358 TOP V	25.782.1553.0	50	8358 TOP H	25.792.1553.0	50
further number of poles upon request	16pole	8358 TOP V	25.782.1653.0	50	8358 TOP H	25.792.1653.0	50
Spacing: 7.62 mm							
	2pole	8458 TOP V	25.783.0253.0	100	8458 TOP H	25.793.0253.0	100
	3pole	8458 TOP V	25.783.0353.0	100	8458 TOP H	25.793.0353.0	100
	4pole	8458 TOP V	25.783.0453.0	50	8458 TOP H	25.793.0453.0	50
	5pole	8458 TOP V	25.783.0553.0	50	8458 TOP H	25.793.0553.0	50
	6pole	8458 TOP V	25.783.0653.0	50	8458 TOP H	25.793.0653.0	50
	7pole	8458 TOP V	25.783.0753.0	50	8458 TOP H	25.793.0753.0	50
	8pole	8458 TOP V	25.783.0853.0	50	8458 TOP H	25.793.0853.0	50
	9pole	8458 TOP V	25.783.0953.0	50	8458 TOP H	25.793.0953.0	50
	10pole	8458 TOP V	25.783.1053.0	50	8458 TOP H	25.793.1053.0	50
	11pole	8458 TOP V	25.783.1153.0	50	8458 TOP H	25.793.1153.0	50
	12pole	8458 TOP V	25.783.1253.0	50	8458 TOP H	25.793.1253.0	50
	13pole	8458 TOP V	25.783.1353.0	50	8458 TOP H	25.793.1353.0	50
	14pole	8458 TOP V	25.783.1453.0	50	8458 TOP H	25.793.1453.0	50
	15pole	8458 TOP V	25.783.1553.0	50	8458 TOP H	25.793.1553.0	50
further number of poles upon request	16pole	8458 TOP V	25.783.1653.0	50	8458 TOP H	25.793.1653.0	50
Accessories							
Marking upon request							
Test plug			Z5.553.2921.0	10		Z5.553.2921.0	10

Spacing: 6.35 mm

Rated cross section:
4.0 mm²

Rated current:
36 A
(related to an ambient termperature of 20 °C,
the rated cross section and max. number of poles)

Connection range:
0.5 – 6.0 mm² solid/
0.5 – 4.0 mm² fine stranded

320 V/4 kV/3 – Overvoltage category III
320 V/4 kV/2 – Overvoltage category II
320 V/4 kV/1 – Overvoltage category I

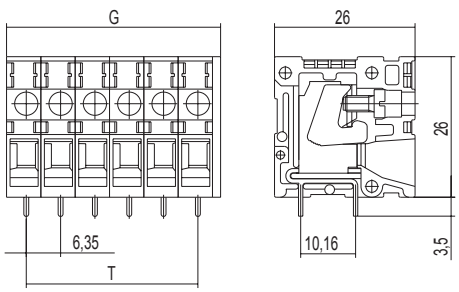

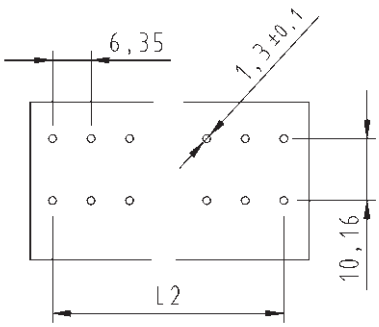

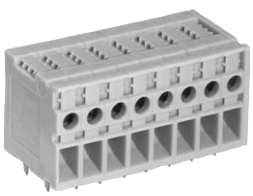

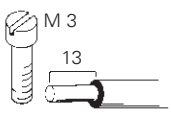

Solder pin Ø 0.8 x 0.9 mm
Bore hole Ø 1.3 mm

Type 7386 TOP H

Rated voltages VDE 0110				
UL ratings	field/factory wiring	No. 22 – 10 AWG	300 V	30 A
CSA ratings		No. 22 – 10 AWG	300 V	30 A
Approvals				

Std. pack	G	T	Poles	Part no.
Spacing: 6.35 mm				unmarked
50	14.20	6.35	2	27.714.0253.0
50	20.55	12.70	3	27.714.0353.0
50	26.90	19.05	4	27.714.0453.0
50	33.25	25.40	5	27.714.0553.0
50	39.60	31.75	6	27.714.0653.0
50	45.95	38.10	7	27.714.0753.0
50	52.30	44.45	8	27.714.0853.0

wiecon PCB

Rated cross section:
4.0 mm²

Rated current:
36 A
(related to an ambient temperature of 20°C,
the rated cross section and max. number of poles)

Connection range:
0.5 – 6.0 mm² solid/
0.5 – 4.0 mm² fine stranded

500 V/4 kV/3 – Overvoltage category III
630 V/4 kV/2 – Overvoltage category II
1000 V/4 kV/1 – Overvoltage category I

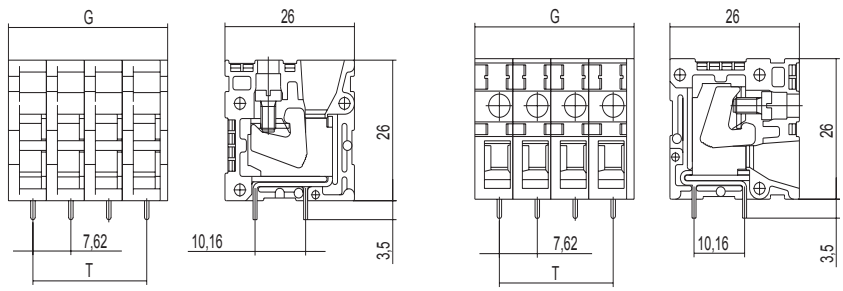

Solder pin 0.8 x 0.9 mm
Bore hole Ø 1.3 mm

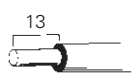

Solder pin 0.8 x 0.9 mm
Bore hole Ø 1.3 mm

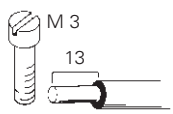

		8486 TOP V			8486 TOP H		
Rated voltages VDE 0110							
UL ratings	field wiring	No. 22 – 10 AWG	300 V	30 A	No. 22 – 10 AWG	300 V	30 A
CSA ratings		No. 22 – 10 AWG	300 V	30 A	No. 22 – 10 AWG	300 V	30 A
Approvals							

Std. pack	G	T	Poles	Part no.	Part no.
Spacing: 7.62 mm				unmarked	unmarked
50	16.74	7.62	2	27.703.0253.0	27.713.0253.0
50	24.36	15.24	3	27.703.0353.0	27.713.0353.0
50	31.98	22.86	4	27.703.0453.0	27.713.0453.0

Accessories

wiecon

Test plug and marking tag carrier for
8191 E / 8191 D / 8291 E / 8291 D
can only be used in the upper tier.

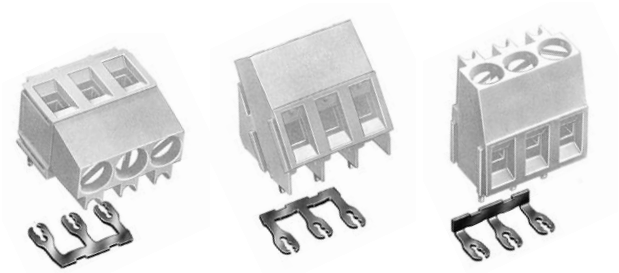

- Jumper bar 2 to 24pole
  for 5.00 and 5.08 mm spacing upon request
- PC board connector with assembled jumper bar
  upon request

Type 8191 / 8191 E / 8191 D / 8192
Type 8291 / 8291 E / 8291 D

Poles	Part no.	Std. pack
	Test plug	
1	Z5.533.7121.0	100
2	Z5.533.7221.0	100
	Test plug, 1pole, 10 mm spacing	
1	Z5.533.7121.0	100
	Marking tag carrier for 12 poles, divisible for smaller pole configurations	
	04.242.4653.0	50
	Marking strips, unmarked	
	04.242.5053.0	25
	1 – 10, 11 – 20 etc. 991 – 999, marked	
	04.842.5053.0	25
	Tear-off marking strip marked 1, 2, 3 ... 0	
	04.841.2150.0	25
	Single tag, unmarked	
	04.242.0850.0	500
	marked	
	04.842.0850.0	500

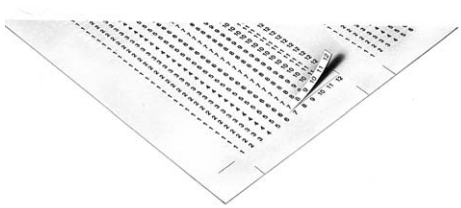

	Adhesive marking strips (1 sheet = 100strips)	
1 – 12	04.007.4089.0	1
13 – 24	04.007.4189.0	1
25 – 36	04.007.4289.0	1
37 – 48	04.007.4389.0	1
49 – 60	04.007.4489.0	1
61 – 72	04.007.4589.0	1
73 – 84	04.007.4689.0	1
85 – 96	04.007.4789.0	1
97 – 108	04.007.4889.0	1

Type 8391/8491

Poles	Part no.	Std. pack
	Test Plug	
1	Z5.533.7121.0	100
2	Z5.533.8221.0	50

Type 8135 / 8235
Type 8191 ZW / 8291 ZW / 8192

Poles	Part no.	Std. pack
	Test plug	
1	Z5.533.7121.0	100
2	Z5.533.7221.0	100
	Test plug, 1pole, 10 mm spacing	
1	Z5.533.7121.0	100
	Marking tag carrier for 12 poles, divisible for smaller pole configurations	
	04.242.4653.0	50
	Marking strips, unmarked	
	04.242.5053.0	25
	1 – 10, 11 – 20 etc. 991 – 999, marked	
	04.842.5053.0	25
	Tear-off marking strip marked 1, 2, 3 ... 0	
	04.841.2150.0	25
	Single tag, unmarked	
	04.242.0850.0	500
	marked	
	04.842.0850.0	500

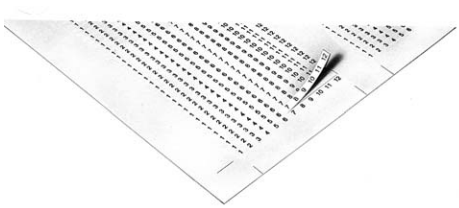

	Adhesive marking strips (1 sheet = 100strips)	
1 – 12	04.007.4089.0	1
13 – 24	04.007.4189.0	1
25 – 36	04.007.4289.0	1
37 – 48	04.007.4389.0	1
49 – 60	04.007.4489.0	1
61 – 72	04.007.4589.0	1
73 – 84	04.007.4689.0	1
85 – 96	04.007.4789.0	1
97 – 108	04.007.4889.0	1

PC board connectors, rising cage clamp system
Spacing: 5.00/10.00 mm

wiecon PCB

Rated cross section:
2.5 mm²

Rated current:
16 A

Connection range:
0.14 – 4.0 mm² solid/
0.14 – 2.5 mm² fine stranded

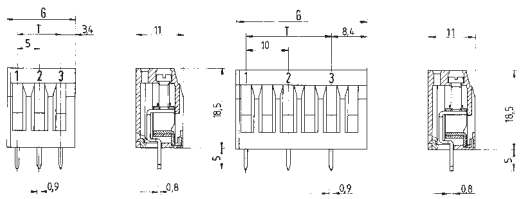

250 V/4 kV/3 – Overvoltage category III
*690 V/4 kV/2 – Overvoltage category II
1000 V/4 kV/1 – Overvoltage category I

* max. 600 V for ungrounded networks or expected overvoltage ≤ 4 kV

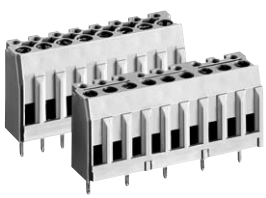

Solder pin 0.8 x 0.9 mm
Bore hole Ø 1.2 mm

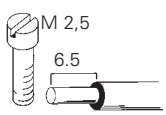

Type 8190
wire horizontal to PC board

Rated voltages VDE 0110 (Spacing: 5 mm)			
UL ratings	No. 22 – 12 AWG	300 V	15 A
CSA ratings	No. 22 – 14 AWG	300 V	10 A
Approvals			

Accessories
Type 8190

Std. pack	G	T	Poles	Part no. unmarked	Part no. marked
Spacing: 5.00 mm					
100	10.86	5	2	25.131.0253.0	25.130.0253.0
100	15.86	10	3	25.131.0353.0	25.130.0353.0
50	20.86	15	4	25.131.0453.0	25.130.0453.0
50	25.86	20	5	25.131.0553.0	25.130.0553.0
50	30.86	25	6	25.131.0653.0	25.130.0653.0
50	35.86	30	7	25.131.0753.0	25.130.0753.0
50	40.86	35	8	25.131.0853.0	25.130.0853.0
50	45.86	40	9	25.131.0953.0	25.130.0953.0
50	50.86	45	10	25.131.1053.0	25.130.1053.0
50	55.86	50	11	25.131.1153.0	25.130.1153.0
50	60.86	55	12	25.131.1253.0	25.130.1253.0
50	65.86	60	13	25.131.1353.0	25.130.1353.0
50	70.86	65	14	25.131.1453.0	25.130.1453.0
50	75.86	70	15	25.131.1553.0	25.130.1553.0
50	80.86	75	16	25.131.1653.0	25.130.1653.0
	17 to 24pole upon request				
Spacing: 10.00 mm				unmarked	marked
50	20.86	10	2	25.133.0253.0	25.132.0253.0
50	30.86	20	3	25.133.0353.0	25.132.0353.0
50	40.86	30	4	25.133.0453.0	25.132.0453.0
50	50.86	40	5	25.133.0553.0	25.132.0553.0
50	60.86	50	6	25.133.0653.0	25.132.0653.0
50	70.86	60	7	25.133.0753.0	25.132.0753.0
50	80.86	70	8	25.133.0853.0	25.132.0853.0
50	90.86	80	9	25.133.0953.0	25.132.0953.0
50	100.86	90	10	25.133.1053.0	25.132.1053.0
50	110.86	100	11	25.133.1153.0	25.132.1153.0
50	120.86	110	12	25.133.1253.0	25.132.1253.0

Rated voltages:
(spacing: 10.00 mm): VDE 0110

690 V/8 kV/3 – Overvoltage category III
1000 V/8 kV/2 – Overvoltage category II
1000 V/8 kV/1 – Overvoltage category I

Material:
Insulating housing: PA 6/66, UL 94-V-0
Clamping body: zinc-plated steel
Contact clip with solder pin:
tin-plated E copper
Clamping screw: zinc-plated steel

Poles	Part no.	Std. pack
	Test plug, nominal current = 2A	
1	Z5.543.0153.0	100
2	Z5.543.0253.0	100
	Marking tag carrier for 12 poles, divisible for smaller pole configurations	
	04.242.4653.0	50
	Marking strips, unmarked	
	04.242.5053.0	25
	1 – 10, 11 – 20 etc. 991 – 999, marked	
	04.842.5053.0	25
	Tear-off marking strip marked 1, 2, 3 ... 0	
	04.841.2150.0	25
	Single tag, unmarked	
	04.242.0850.0	500
	marked	
	04.842.0850.0	500

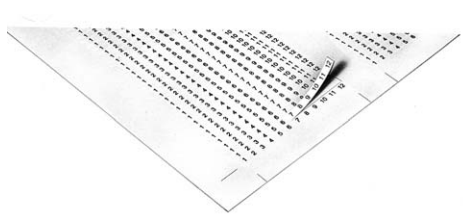

	Adhesive marking strips (1 sheet = 100strips)	
1 – 12	04.007.4089.0	1
13 – 24	04.007.4189.0	1
25 – 36	04.007.4289.0	1
37 – 48	04.007.4389.0	1
49 – 60	04.007.4489.0	1
61 – 72	04.007.4589.0	1
73 – 84	04.007.4689.0	1
85 – 96	04.007.4789.0	1
97 – 108	04.007.4889.0	1

PC board connectors, rising cage clamp system
Spacing: 7.50 mm

Rated cross section:
2.5 mm²

Rated current:
16 A

Connection range:
0.14 – 4.0 mm² solid/
0.14 – 2.5 mm² fine stranded

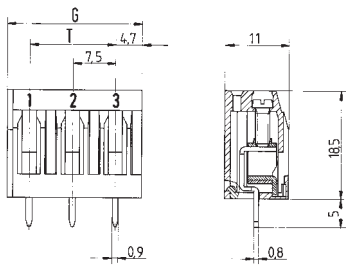

500 V/6 kV/3 – Overvoltage category III
1000 V/6 kV/2 – Overvoltage category II
1000 V/6 kV/1 – Overvoltage category I

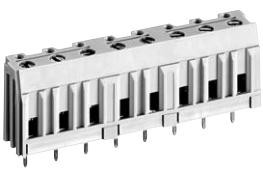

Solder pin 0.8 x 0.9 mm
Bore hole Ø 1.2 mm

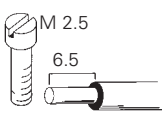

Type 8390
wire horizontal to PC board

Rated voltages VDE 0110			
UL ratings	No. 22 – 12 AWG	300 V	15 A
CSA ratings	No. 22 – 14 AWG	300 V	10 A
Approvals			

Accessories
Type 8390

Poles	Part no.	Std. pack
	Test plug / nominal current = 2 A	
1	Z5.543.0153.0	100
2	Z5.543.0253.0	100

Std. pack	G	T	Poles	Part no. unmarked	Part no. marked
Spacing: 7.50 mm					
100	15.86	7.5	2	25.151.0253.0	25.150.0253.0
100	23.36	15.0	3	25.151.0353.0	25.150.0353.0
50	30.86	22.5	4	25.151.0453.0	25.150.0453.0
50	38.36	30.0	5	25.151.0553.0	25.150.0553.0
50	45.86	37.5	6	25.151.0653.0	25.150.0653.0
50	53.36	45.0	7	25.151.0753.0	25.150.0753.0
50	60.86	52.5	8	25.151.0853.0	25.150.0853.0
50	68.36	60.0	9	25.151.0953.0	25.150.0953.0
50	75.86	67.5	10	25.151.1053.0	25.150.1053.0
50	83.36	75.0	11	25.151.1153.0	25.150.1153.0
50	90.86	82.5	12	25.151.1253.0	25.150.1253.0

Material:
Insulating housing: PA 6/66, UL 94-V-0
Clamping body: zinc-plated steel
Contact clip with solder pin:
tin-plated E copper
Clamping screw: zinc-plated steel

PC board connectors, rising cage clamp system
Spacing: 5.00/5.08 mm

wiecon PCB

Rated cross section:
1.5 mm²

Rated current:
10 A

Connection range:
0.14 – 2.5 mm² solid/
0.14 – 1.5 mm² fine stranded

250 V/4 kV/3 – Overvoltage category III
*690 V/4 kV/2 – Overvoltage category II
1000 V/4 kV/1 – Overvoltage category I

* max. 600 V for ungrounded networks or expected overvoltage ≤ 4 kV

without insulating plate

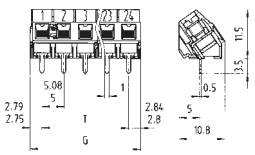

with insulating plate, **without** fixing bolts

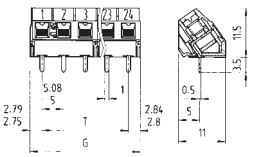

Bore hole plan for version **with** fixing bolts

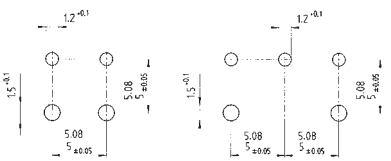

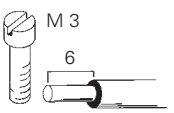

Solder pin 0.5 x 1.0 mm
Bore hole Ø 1.2 mm

Type 8134/8234
wire 35° to PC board

Rated voltages VDE 0110				
UL ratings	field/factory wiring	No. 30 – 14 AWG	300 V	15/16 A
CSA ratings		No. 30 – 14 AWG	300 V	15 A
Approvals				

Std. pack	G	T	Poles	Part no. unmarked without insulating plate	Part no. marked without insulating plate	Part no. unmarked with insulating plate with fixing bolts	Part no. marked with fixing bolts
Spacing: 5.00 mm							
100	10.55	5	2	25.501.0253.0	25.500.0253.0	25.501.6253.0	25.500.6253.0
100	15.55	10	3	25.501.0353.0	25.500.0353.0	25.501.6353.0	25.500.6353.0
50	20.55	15	4	25.501.0453.0	25.500.0453.0		
50	25.55	20	5	25.501.0553.0	25.500.0553.0		
50	30.55	25	6	25.501.0653.0	25.500.0653.0		
50	35.55	30	7	25.501.0753.0	25.500.0753.0		
50	40.55	35	8	25.501.0853.0	25.500.0853.0		
50	45.55	40	9	25.501.0953.0	25.500.0953.0		
50	50.55	45	10	25.501.1053.0	25.500.1053.0		
50	55.55	50	11	25.501.1153.0	25.500.1153.0		
50	60.55	55	12	25.501.1253.0	25.500.1253.0		
50	65.55	60	13	25.501.1353.0	25.500.1353.0		
50	70.55	65	14	25.501.1453.0	25.500.1453.0		
50	75.55	70	15	25.501.1553.0	25.500.1553.0		
50	80.55	75	16	25.501.1653.0	25.500.1653.0		
17 to 24pole upon request							
Spacing: 5.08 mm							
100	10.71	5.08	2	25.503.0253.0	25.502.0253.0	25.503.6253.0	25.502.6253.0
100	15.79	10.16	3	25.503.0353.0	25.502.0353.0	25.503.6353.0	25.502.6353.0
50	20.87	15.24	4	25.503.0453.0	25.502.0453.0		
50	25.95	20.32	5	25.503.0553.0	25.502.0553.0		
50	31.03	25.40	6	25.503.0653.0	25.502.0653.0		
50	36.11	30.48	7	25.503.0753.0	25.502.0753.0		
50	41.19	35.56	8	25.503.0853.0	25.502.0853.0		
50	46.27	40.64	9	25.503.0953.0	25.502.0953.0		
50	51.35	45.72	10	25.503.1053.0	25.502.1053.0		
50	56.42	50.80	11	25.503.1153.0	25.502.1153.0		
50	61.51	55.88	12	25.503.1253.0	25.502.1253.0		
50	66.59	60.96	13	25.503.1353.0	25.502.1353.0		
50	71.67	66.04	14	25.503.1453.0	25.502.1453.0		
50	76.75	71.12	15	25.503.1553.0	25.502.1553.0		
50	81.83	76.20	16	25.503.1653.0	25.502.1653.0		
17 to 24pole upon request							

wiecon

Material:
Insulating housing: PA 66/6 gray, UL 94-V-0
Clamping body: nickel-plated brass
Contact clip with solder pin:
tin-plated bronze
Clamping screw: zinc-plated steel
Brass Nickel-plated
available upon request

Part no.	Part no.
unmarked with insulating plate without fixing bolts	marked with insulating plate with fixing bolts
upon request	upon request
upon request	upon request

PC board connectors, rising cage clamp system
Spacing: 5.00/5.08 mm

wiecon PCB

Rated cross section:
2.5 mm²

Rated current:
16 A

Connection range:
0.14 – 4.0 mm² solid/
0.14 – 2.5 mm² fine stranded

250 V/4 kV/3 – Overvoltage category III
*690 V/4 kV/2 – Overvoltage category II
1000 V/4 kV/1 – Overvoltage category I

* max. 600 V for ungrounded networks or expected overvoltage ≤ 4 kV

without insulating plate

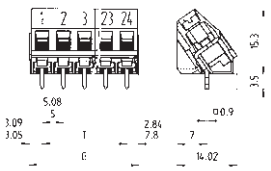

with insulating plate, **without** fixing bolts

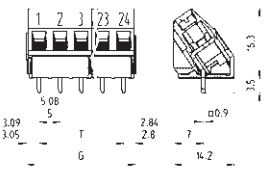

Bore hole plan for version **with** fixing bolts

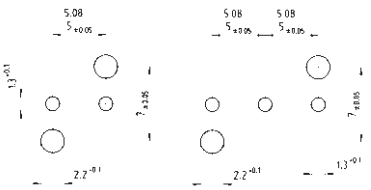

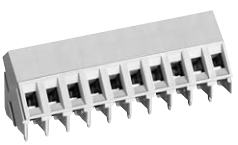

Type 8135/8235
wire 35° to PC board

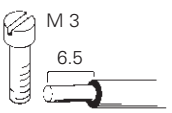

Solder pin 0.9 x 0.9 mm
Bore hole Ø 1.3 mm

Rated voltages VDE 0110			
UL ratings	field/factory wiring	No. 22 – 12 AWG	300 V 20/30 A
CSA ratings		No. 22 – 12 AWG	300 V 25 A
Approvals			

Std. pack	G	T	Poles	Part no. unmarked without insulating plate	Part no. marked without insulating plate	Part no. unmarked with insulating plate with fixing bolts	Part no. marked with insulating plate with fixing bolts
Spacing: 5.00 mm							
100	10.85	5	2	25.521.0253.0	25.520.0253.0	25.521.6253.0	25.520.6253.0
100	15.85	10	3	25.521.0353.0	25.520.0353.0	25.521.6353.0	25.520.6353.0
50	20.85	15	4	25.521.0453.0	25.520.0453.0		
50	25.85	20	5	25.521.0553.0	25.520.0553.0		
50	30.85	25	6	25.521.0653.0	25.520.0653.0		
50	35.85	30	7	25.521.0753.0	25.520.0753.0		
50	40.85	35	8	25.521.0853.0	25.520.0853.0		
50	45.85	40	9	25.521.0953.0	25.520.0953.0		
50	50.85	45	10	25.521.1053.0	25.520.1053.0		
50	55.85	50	11	25.521.1153.0	25.520.1153.0		
50	60.85	55	12	25.521.1253.0	25.520.1253.0		
50	65.85	60	13	25.521.1353.0	25.520.1353.0		
50	70.85	65	14	25.521.1453.0	25.520.1453.0		
50	75.85	70	15	25.521.1553.0	25.520.1553.0		
50	80.85	75	16	25.521.1653.0	25.520.1653.0		
17 to 24pole upon request							
Spacing: 5.08 mm							
100	11.01	5.08	2	25.523.0253.0	25.522.0253.0	25.523.6253.0	25.522.6253.0
100	16.09	10.16	3	25.523.0353.0	25.522.0353.0	25.523.6353.0	25.522.6353.0
50	21.17	15.24	4	25.523.0453.0	25.522.0453.0		
50	26.25	20.32	5	25.523.0553.0	25.522.0553.0		
50	31.33	25.40	6	25.523.0653.0	25.522.0653.0		
50	36.41	30.48	7	25.523.0753.0	25.522.0753.0		
50	41.49	35.56	8	25.523.0853.0	25.522.0853.0		
50	46.57	40.64	9	25.523.0953.0	25.522.0953.0		
50	51.65	45.72	10	25.523.1053.0	25.522.1053.0		
50	56.73	50.80	11	25.523.1153.0	25.522.1153.0		
50	61.81	55.88	12	25.523.1253.0	25.522.1253.0		
50	66.89	60.96	13	25.523.1353.0	25.522.1353.0		
50	71.97	66.04	14	25.523.1453.0	25.522.1453.0		
50	77.05	71.12	15	25.523.1553.0	25.522.1553.0		
50	82.13	76.20	16	25.523.1653.0	25.522.1653.0		
17 to 24pole upon request							

with insulating plate, **with** fixing bolts

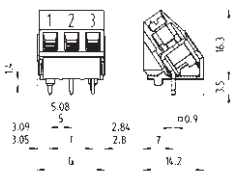

Material:
Insulating housing: PA 66/6 gray, UL 94-V-0
Clamping body: nickel-plated brass
Contact clip with solder pin:
tin-plated E copper
Clamping screw: zinc-plated steel
Brass Nickel-plated
available upon request

Part no.	Part no.
unmarked with insulating plate without fixing bolts	marked with insulating plate without fixing bolts
upon request	upon request
upon request	upon request

PC board connectors, rising cage clamp system
Spacing: 5.00/5.08 mm

wiecon PCB

Rated cross section:
1.5 mm²

Rated current:
10 A

Connection range:
0.14 – 2.5 mm² solid/
0.14 – 1.5 mm² fine stranded

250 V/4 kV/3 – Overvoltage category III
*690 V/4 kV/2 – Overvoltage category II
1000 V/4 kV/1 – Overvoltage category I

* max. 600 V for ungrounded networks or expected overvoltage ≤ 4 kV

without insulating plate

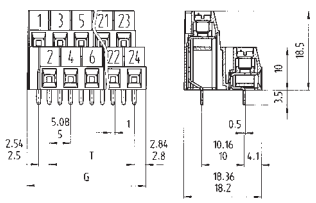

with insulating plate, **without** fixing bolts

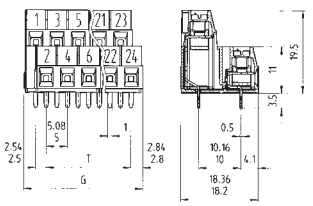

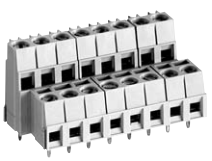

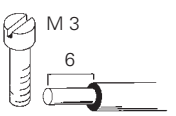

Solder pin 0.5 x 1.0 mm
Bore hole Ø 1.2 mm

Type 8192 E/8292 E

wire horizontal to PC board

Rated voltages VDE 0110				
UL ratings	field/factory wiring	No. 30 – 14 AWG	300 V	15/16 A
CSA ratings		No. 30 – 14 AWG	300 V	15 A
Approvals				

Std. pack	G	T	Poles	Part no.	Part no.	Part no.	Part no.
Spacing: 5.00 mm				unmarked without insulating plate	marked without insulating plate	unmarked with insulating plate with fixing bolts	marked with insulating plate with fixing bolts
50	13.05	5	4	25.198.5253.0	25.198.0253.0	25.198.9253.0	25.198.4253.0
50	18.05	10	6	25.198.5353.0	25.198.0353.0	25.198.9353.0	25.198.4353.0
50	23.05	15	8	25.198.5453.0	25.198.0453.0		
50	28.05	20	10	25.198.5553.0	25.198.0553.0		
50	33.05	25	12	25.198.5653.0	25.198.0653.0		
50	38.05	30	14	25.198.5753.0	25.198.0753.0		
50	43.05	35	16	25.198.5853.0	25.198.0853.0		
50	48.05	40	18	25.198.5953.0	25.198.0953.0		
50	53.05	45	20	25.198.6053.0	25.198.1053.0		
50	58.05	50	22	25.198.6153.0	25.198.1153.0		
50	63.05	55	24	25.198.6253.0	25.198.1253.0		
Spacing: 5.08 mm							
50	13.25	5.08	4	25.199.5253.0	25.199.0253.0	25.199.9253.0	25.199.4253.0
50	18.33	10.16	6	25.199.5353.0	25.199.0353.0	25.199.9353.0	25.199.4353.0
50	23.41	15.24	8	25.199.5453.0	25.199.0453.0		
50	28.49	20.32	10	25.199.5553.0	25.199.0553.0		
50	33.57	25.40	12	25.199.5653.0	25.199.0653.0		
50	38.65	30.48	14	25.199.5753.0	25.199.0753.0		
50	43.73	35.56	16	25.199.5853.0	25.199.0853.0		
50	48.81	40.64	18	25.199.5953.0	25.199.0953.0		
50	53.89	45.72	20	25.199.6053.0	25.199.1053.0		
50	58.97	50.80	22	25.199.6153.0	25.199.1153.0		
50	64.05	55.88	24	25.199.6253.0	25.199.1253.0		

Tear-off marking strip with 10 marking tags

Material: Polyamide 6/66 white/marking black	Marking per tree	Type	Part no.	Std. pack
unmarked		9704 A	04.241.1150.0	25
marked with the same number	1 1 1 1 1 1 1 1 1 1	9704 A/1 B	04.841.1150.0	25
	2 2 2 2 2 2 2 2 2 2	9704 A/2 B	04.841.1250.0	25
	3 3 3 3 3 3 3 3 3 3	9704 A/3 B	04.841.1350.0	25
	4 4 4 4 4 4 4 4 4 4	9704 A/4 B	04.841.1450.0	25
	5 5 5 5 5 5 5 5 5 5	9704 A/5 B	04.841.1550.0	25
	6 6 6 6 6 6 6 6 6 6	9704 A/6 B	04.841.1650.0	25
	7 7 7 7 7 7 7 7 7 7	9704 A/7 B	04.841.1750.0	25
	8 8 8 8 8 8 8 8 8 8	9704 A/8 B	04.841.1850.0	25
	9 9 9 9 9 9 9 9 9 9	9704 A/9 B	04.841.1950.0	25
	0 0 0 0 0 0 0 0 0 0	9704 A/0 B	04.841.2050.0	25
marked with consecutive numbers	1 2 3 4 5 6 7 8 9 0	9704 A/1-0 B	04.841.2150.0	25
marked with the same capital letters	A A A A A A A A A A	9704 A/AG B	04.841.2250.0	25
	B B B B B B B B B B	9704 A/BG B	04.841.2350.0	25
	C C C C C C C C C C	9704 A/CG B	04.841.2450.0	25
	D D D D D D D D D D	9704 A/DG B	04.841.2550.0	25
	E E E E E E E E E E	9704 A/EG B	04.841.2650.0	25
	F F F F F F F F F F	9704 A/FG B	04.841.2750.0	25
	G G G G G G G G G G	9704 A/GG B	04.841.2850.0	25
	H H H H H H H H H H	9704 A/HG B	04.841.2950.0	25
	I I I I I I I I I I	9704 A/IG B	04.841.3050.0	25
	J J J J J J J J J J	9704 A/JG B	04.841.3150.0	25
	K K K K K K K K K K	9704 A/KG B	04.841.3250.0	25
	L L L L L L L L L L	9704 A/LG B	04.841.3350.0	25
	M M M M M M M M M M	9704 A/MG B	04.841.3450.0	25
	N N N N N N N N N N	9704 A/NG B	04.841.3550.0	25
	O O O O O O O O O O	9704 A/OG B	04.841.3650.0	25
	P P P P P P P P P P	9704 A/PG B	04.841.3750.0	25
	Q Q Q Q Q Q Q Q Q Q	9704 A/QG B	04.841.3850.0	25
	R R R R R R R R R R	9704 A/RG B	04.841.3950.0	25
	S S S S S S S S S S	9704 A/SG B	04.841.4050.0	25
	T T T T T T T T T T	9704 A/TG B	04.841.4150.0	25
	U U U U U U U U U U	9704 A/UG B	04.841.4250.0	25
	V V V V V V V V V V	9704 A/VG B	04.841.4350.0	25
	W W W W W W W W W W	9704 A/WG B	04.841.4450.0	25
	X X X X X X X X X X	9704 A/XG B	04.841.4550.0	25
	Y Y Y Y Y Y Y Y Y Y	9704 A/YG B	04.841.4650.0	25
	Z Z Z Z Z Z Z Z Z Z	9704 A/ZG B	04.841.4750.0	25
marked with the same lower case letters	a a a a a a a a a a	9704 A/AK B	04.841.4850.0	25
	b b b b b b b b b b	9704 A/BK B	04.841.4950.0	25
	c c c c c c c c c c	9704 A/CK B	04.841.5050.0	25
	d d d d d d d d d d	9704 A/DK B	04.841.5150.0	25
	e e e e e e e e e e	9704 A/EK B	04.841.5250.0	25
	f f f f f f f f f f	9704 A/FK B	04.841.5350.0	25
	g g g g g g g g g g	9704 A/GK B	04.841.5450.0	25
	h h h h h h h h h h	9704 A/HK B	04.841.5550.0	25
	i i i i i i i i i i	9704 A/IK B	04.841.5650.0	25
	j j j j j j j j j j	9704 A/JK B	04.841.5750.0	25
	k k k k k k k k k k	9704 A/KK B	04.841.5850.0	25
	l l l l l l l l l l	9704 A/LK B	04.841.5950.0	25
	m m m m m m m m m m	9704 A/MK B	04.841.6050.0	25
	n n n n n n n n n n	9704 A/NK B	04.841.6150.0	25
	o o o o o o o o o o	9704 A/OK B	04.841.6250.0	25
	p p p p p p p p p p	9704 A/PK B	04.841.6350.0	25
	q q q q q q q q q q	9704 A/QK B	04.841.6450.0	25
	r r r r r r r r r r	9704 A/RK B	04.841.6550.0	25
	s s s s s s s s s s	9704 A/SK B	04.841.6650.0	25
	t t t t t t t t t t	9704 A/TK B	04.841.6750.0	25
	u u u u u u u u u u	9704 A/UK B	04.841.6850.0	25
	v v v v v v v v v v	9704 A/VK B	04.841.6950.0	25
	w w w w w w w w w w	9704 A/WK B	04.841.7050.0	25
	x x x x x x x x x x	9704 A/XK B	04.841.7150.0	25
	y y y y y y y y y y	9704 A/YK B	04.841.7250.0	25
	z z z z z z z z z z	9704 A/ZK B	04.841.7350.0	25
marked with the same symbols	+ + + + + + + + + +	9704 A/+ B	04.841.7450.0	25
	– – – – – – – – – –	9704 A/– B	04.841.7550.0	25
	/ / / / / / / / / /	9704 A// B	04.841.7650.0	25
	. . . .	9704 A/. B	04.841.7750.0	25
1 set of the same numbers = 10 x 25 strips = 2500 numbers	1 1 1 ... 0 0 0	111 to 000	04.841.9050.0	1
1 set of cap. letters = 26 x 25 strips = 6500 letters	A A A ... Z Z Z	A to Z GB	04.841.9150.0	1
1 set of lower case letters = 26 x 25 strips = 6500 letters	a a a ... z z z	a to z KB	04.841.9250.0	1

PC board connectors, rising cage clamp system
Spacing: 5.00/5.08 mm

wiecon PCB

Rated cross section:
2.5 mm²

Rated current:
16 A

Connection range:
0.14 – 4.0 mm² solid/
0.14 – 2.5 mm² fine stranded

250 V/4 kV/3 – Overvoltage category III
*690 V/4 kV/2 – Overvoltage category II
1000 V/4 kV/1 – Overvoltage category I

* max. 600 V for ungrounded networks or expected overvoltage ≤ 4 kV

without insulating plate

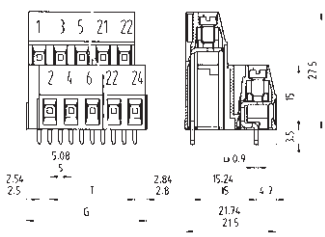

with insulating plate, **without** fixing bolts

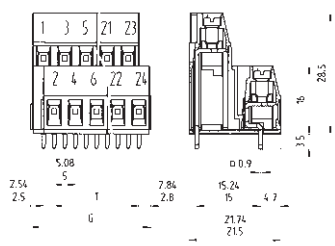

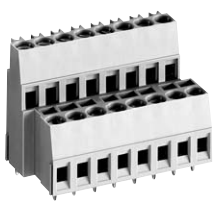

Solder pin 0.9 x 0.9 mm
Bore hole Ø 1.3 mm

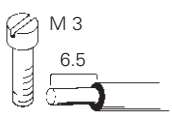

Type 8191 E/8291 E

wire horizontal to PC board

Rated voltages VDE 0110				
UL ratings	field/factory wiring	No. 22 – 12 AWG	300 V	20/30 A
CSA ratings		No. 22 – 12 AWG	300 V	25 A
Approvals				

Std. pack	G	T	Poles	Part no.	Part no.	Part no.	Part no.
Spacing: 5.00 mm				unmarked without insulating plate	marked without insulating plate	unmarked with insulating plate with fixing bolts	marked with insulating plate with fixing bolts
50	13.05	5	4	25.178.5253.0	25.178.0253.0	25.178.9253.0	25.178.4253.0
50	18.05	10	6	25.178.5353.0	25.178.0353.0	25.178.9353.0	25.178.4353.0
50	23.05	15	8	25.178.5453.0	25.178.0453.0		
50	28.05	20	10	25.178.5553.0	25.178.0553.0		
50	33.05	25	12	25.178.5653.0	25.178.0653.0		
50	38.05	30	14	25.178.5753.0	25.178.0753.0		
50	43.05	35	16	25.178.5853.0	25.178.0853.0		
50	48.05	40	18	25.178.5953.0	25.178.0953.0		
50	53.05	45	20	25.178.6053.0	25.178.1053.0		
50	58.05	50	22	25.178.6153.0	25.178.1153.0		
50	63.05	55	24	25.178.6253.0	25.178.1253.0		
Spacing: 5.08 mm							
50	13.25	5.08	4	25.179.5253.0	25.179.0253.0	25.179.9253.0	25.179.4253.0
50	18.33	10.16	6	25.179.5353.0	25.179.0353.0	25.179.9353.0	25.179.4353.0
50	23.41	15.24	8	25.179.5453.0	25.179.0453.0		
50	28.49	20.32	10	25.179.5553.0	25.179.0553.0		
50	33.57	25.40	12	25.179.5653.0	25.179.0653.0		
50	38.65	30.48	14	25.179.5753.0	25.179.0753.0		
50	43.73	35.56	16	25.179.5853.0	25.179.0853.0		
50	48.81	40.64	18	25.179.5953.0	25.179.0953.0		
50	53.89	45.72	20	25.179.6053.0	25.179.1053.0		
50	58.97	50.80	22	25.179.6153.0	25.179.1153.0		
50	64.05	55.88	24	25.179.6253.0	25.179.1253.0		

with insulating plate, **with** fixing bolts

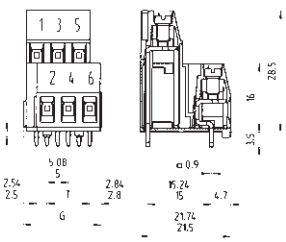

Bore hole plan for version **with** fixing bolts

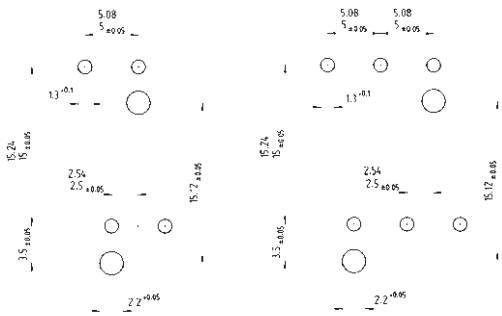

Material:
Insulating housing: PA 66/6 gray, UL 94-V-2
Clamping body: nickel-plated brass
Contact clip with solder pin:
tin-plated E copper
Clamping screw: zinc-plated steel

Part no.	Part no.
unmarked with insulating plate without fixing bolts	marked with insulating plate without fixing bolts
upon request	upon request
upon request	upon request

PC board connector, rising cage clamp system
Spacing: 5.00 mm

wiecon PCB

Rated cross section:
2.5 mm²

Rated current:
16 A

Connection range:
0.14 – 4.0 mm² solid/
0.14 – 2.5 mm² fine stranded

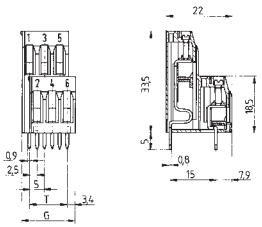

250 V/4 kV/3 – Overvoltage category III
*690 V/4 kV/2 – Overvoltage category II
1000 V/4 kV/1 – Overvoltage category I

* max. 600 V for ungrounded networks or expected overvoltage ≤ 4 kV

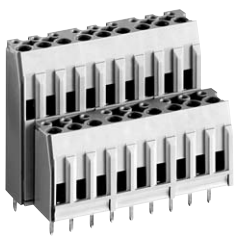

Type 8190 E
wire horizontal to PC board

Solder pin 0.8 x 0.9 mm
Bore hole Ø 1.2 mm

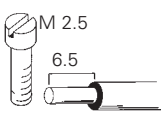

Rated voltages VDE 0110		
UL ratings	No. 22 – 12 AWG	300 V 15 A
CSA ratings	No. 22 – 14 AWG	300 V 10 A
Approvals		

Std. pack	G	T	Poles	Part no. unmarked	Part no. marked
Spacing: 5.00 mm					
50	13.36	5	4	25.131.3253.0	25.130.3253.0
50	18.36	10	6	25.131.3353.0	25.130.3353.0
50	23.36	15	8	25.131.3453.0	25.130.3453.0
50	28.36	20	10	25.131.3553.0	25.130.3553.0
50	33.36	25	12	25.131.3653.0	25.130.3653.0
50	38.36	30	14	25.131.3753.0	25.130.3753.0
50	43.36	35	16	25.131.3853.0	25.130.3853.0
50	48.36	40	18	25.131.3953.0	25.130.3953.0
50	53.36	45	20	25.131.4053.0	25.130.4053.0
50	58.36	50	22	25.131.4153.0	25.130.4153.0
50	63.36	55	24	25.131.4253.0	25.130.4253.0

Material:
Insulating housing: PA 6/66, UL 94-V-0
Clamping body: zinc-plated steel
Contact clip with solder pin:
tin-plated E copper
Clamping screw: zinc-plated steel

Accessories
Type 8190 E

Poles	Part no.	Std. pack
	Test plug, nominal current = 2A	
1	Z5.543.0153.0	100
2	Z5.543.0253.0	100
	Marking tag carrier for 12 poles, divisible for smaller pole configurations	
	04.242.4653.0	50
	Marking strips, unmarked	
	04.242.5053.0	25
	1 – 10, 11 – 20 etc. 991 – 999, marked	
	04.842.5053.0	25
	Tear-off marking strip marked 1, 2, 3 ... 0	
	04.841.2150.0	25
	Single tag, unmarked	
	04.242.0850.0	500
	marked	
	04.842.0850.0	500

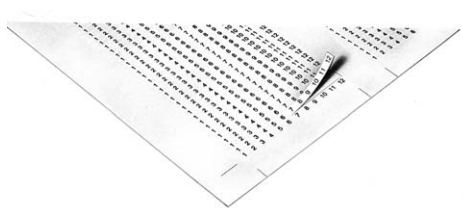

	Adhesive marking strips (1 sheet = 100strips)	
1 – 12	04.007.4089.0	1
13 – 24	04.007.4189.0	1
25 – 36	04.007.4289.0	1
37 – 48	04.007.4389.0	1
49 – 60	04.007.4489.0	1
61 – 72	04.007.4589.0	1
73 – 84	04.007.4689.0	1
85 – 96	04.007.4789.0	1
97 – 108	04.007.4889.0	1

wiecon

PC board connectors, rising cage clamp system
Spacing: 5.00/5.08 mm

wiecon PCB

Rated cross section:
2.5 mm²

Rated current:
16 A

Connection range:
0.14 – 4.0 mm² solid/
0.14 – 2.5 mm² fine stranded

250 V/4 kV/3 – Overvoltage category III
*690 V/4 kV/2 – Overvoltage category II
1000 V/4 kV/1 – Overvoltage category I

* max. 600 V for ungrounded networks or expected overvoltage ≤ 4 kV

without insulating plate

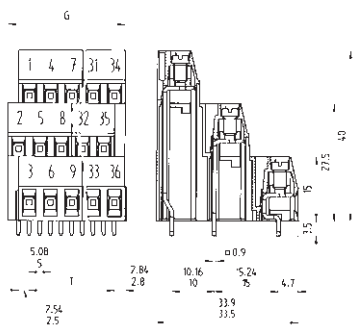

Solder pin 0.9 x 0.9 mm
Bore hole Ø 1.3 mm

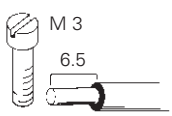

Type 8191 D/8291 D
wire horizontal to PC board

Rated voltages VDE 0110				
UL ratings	field/factory wiring	No. 22 – 12 AWG	300 V	20/30 A
CSA ratings		No. 22 – 12 AWG	300 V	25 A
Approvals				

Std. pack	G	T	Poles	Part no.	Part no.	Part no.	Part no.
Spacing: 5.00 mm				unmarked without insulating plate	marked without insulating plate	unmarked with insulating plate with fixing bolts	marked with insulating plate with fixing bolts
50	12.8	5	6	25.180.5253.0	25.180.0253.0	25.180.9253.0	25.180.4253.0
50	17.8	10	9	25.180.5353.0	25.180.0353.0	25.180.9353.0	25.180.4353.0
50	22.8	15	12	25.180.5453.0	25.180.0453.0		
50	27.8	20	15	25.180.5553.0	25.180.0553.0		
50	32.8	25	18	25.180.5653.0	25.180.0653.0		
50	37.8	30	21	25.180.5753.0	25.180.0753.0		
50	42.8	35	24	25.180.5853.0	25.180.0853.0		
50	47.8	40	27	25.180.5953.0	25.180.0953.0		
20	52.8	45	30	25.180.6053.0	25.180.1053.0		
20	57.8	50	33	25.180.6153.0	25.180.1153.0		
20	62.8	55	36	25.180.6253.0	25.180.1253.0		
Spacing: 5.08 mm							
50	12.70	5.08	6	25.181.5253.0	25.181.0253.0	25.181.9253.0	25.181.4253.0
50	17.78	10.16	9	25.181.5353.0	25.181.0353.0	25.181.9353.0	25.181.4353.0
50	22.86	15.24	12	25.181.5453.0	25.181.0453.0		
50	27.94	20.32	15	25.181.5553.0	25.181.0553.0		
50	33.02	25.40	18	25.181.5653.0	25.181.0653.0		
50	38.10	30.48	21	25.181.5753.0	25.181.0753.0		
50	43.18	35.56	24	25.181.5853.0	25.181.0853.0		
50	48.26	40.64	27	25.181.5953.0	25.181.0953.0		
20	53.34	45.72	30	25.181.6053.0	25.181.1053.0		
20	58.42	50.80	33	25.181.6153.0	25.181.1153.0		
20	63.50	55.88	36	25.181.6253.0	25.181.1253.0		

with insulating plate, **without** fixing bolts

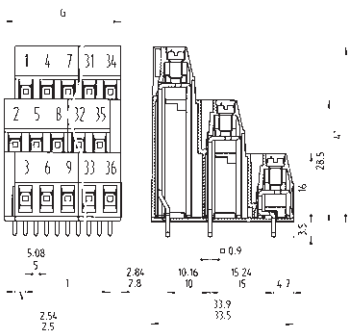

with insulating plate, **with** fixing bolts

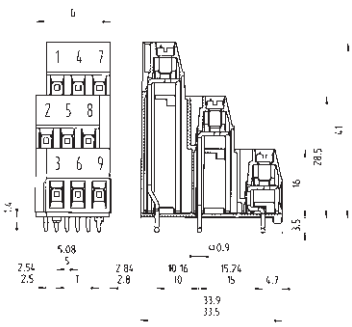

Bore hole plan for version **with** fixing bolts

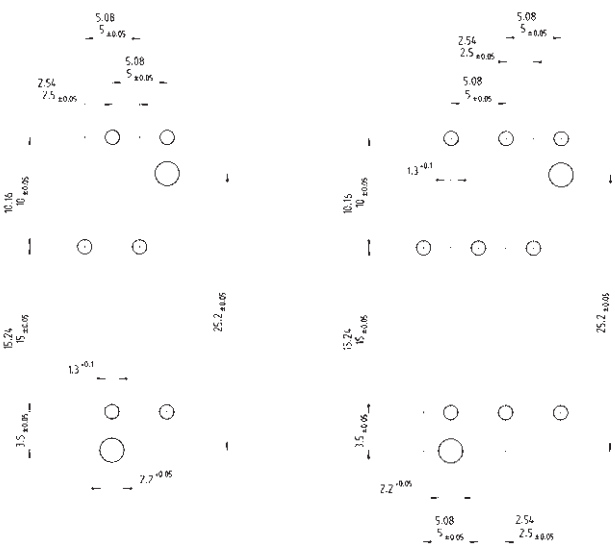

Material:
Insulating housing: PA 66/6 gray, UL 94-V-0
Clamping body: nickel-plated brass
Contact clip with solder pin:
tin-plated E copper
Clamping screw: zinc-plated steel

Part no.	Part no.
unmarked with insulating plate without fixing bolts	marked with insulating plate without fixing bolts
upon request	upon request
upon request	upon request

PC board connectors, rising cage clamp system
Spacing: 5.00 mm

wiecon PCB

Rated cross section:
1.5 mm², PE 2.5 mm²

Rated current:
10 A

Connection range:
0.5 – 2.5 mm² solid 0.5 – 4.0 mm² (PE)
0.5 – 1.5 mm² fine stranded 0.5 – 2.5 mm² (PE)

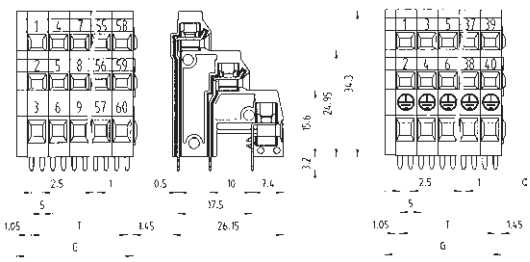

250 V/4 kV/3 – Overvoltage category III
*690 V/4 kV/2 – Overvoltage category II
1000 V/4 kV/1 – Overvoltage category I

* max. 600 V for ungrounded networks or expected overvoltage ≤ 4 kV

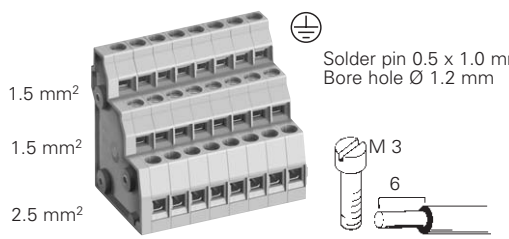

Type 8195 D/...
wire horizontal to PC board

Material: **Type 8195 D/...** and **Type 8195 V/...**
Insulating housing: PA 6/66, UL 94-V-0
Clamping body: tin-plated brass
Contact clip with solder pin: tin-plated
Clamping screw: zinc-plated steel

Rated voltages VDE 0110					
UL ratings	field/factory wiring	No. 30 – 14 AWG	300 V	10 A	No. 20 – 12 AWG for PE
CSA ratings		No. 30 – 14 AWG	300 V	10 A	No. 20 – 12 AWG for Ground
Approvals					

Std. pack	G	T	Poles	Part no. unmarked	Part no. marked
Spacing: 5.00 mm					
50	12.50	7.50	6	25.153.2253.0	25.153.0253.0
50	17.50	12.50	9	25.153.2353.0	25.153.0353.0
50	22.50	17.50	12	25.153.2453.0	25.153.0453.0
50	27.50	22.50	15	25.153.2553.0	25.153.0553.0
50	32.50	27.50	18	25.153.2653.0	25.153.0653.0
50	37.50	32.50	21	25.153.2753.0	25.153.0753.0
50	42.50	37.50	24	25.153.2853.0	25.153.0853.0
20	47.50	42.50	27	25.153.2953.0	25.153.0953.0
20	52.50	47.50	30	25.153.3053.0	25.153.1053.0
33 to 60pole upon request					

Initiator connectors **Spacing: 5.00 mm**	⏚ jumpered	**Type 8195 D/... VB1** unmarked	marked
50	2 PE + 4	25.153.6253.0	25.153.4253.0
50	3 PE + 6	25.153.6353.0	25.153.4353.0
50	4 PE + 8	25.153.6453.0	25.153.4453.0
50	5 PE + 10	25.153.6553.0	25.153.4553.0
50	6 PE + 12	25.153.6653.0	25.153.4653.0
50	7 PE + 14	25.153.6753.0	25.153.4753.0
50	8 PE + 16	25.153.6853.0	25.153.4853.0
50	9 PE + 18	25.153.6953.0	25.153.4953.0
20	10 PE + 20	25.153.7053.0	25.153.5053.0
11 PE + 22 up to 20 PE + 40 upon request			

Rated cross section:
1.5 mm², PE 2.5 mm²

Rated current:
10 A

Connection range:
0.5 – 2.5 mm² solid 0.5 – 4.0 mm² (PE)
0.5 – 1.5 mm² fine stranded 0.5 – 2.5 mm² (PE)

250 V/4 kV/3 – Overvoltage category III
*690 V/4 kV/2 – Overvoltage category II
1000 V/4 kV/1 – Overvoltage category I

* max. 600 V for ungrounded networks or expected overvoltage ≤ 4 kV

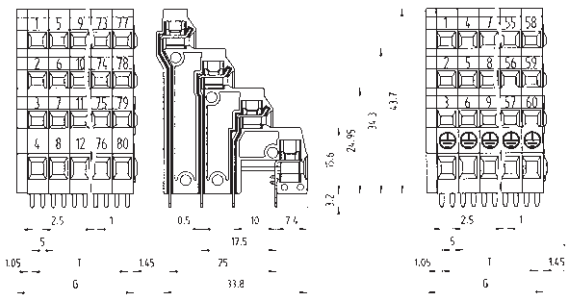

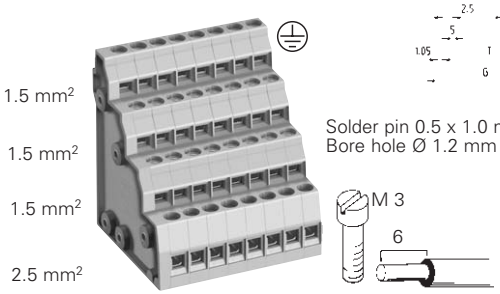

Solder pin 0.5 x 1.0 mm
Bore hole Ø 1.2 mm

Type 8195 V/...
wire horizontal to PC board

Rated voltages VDE 0110					
UL ratings	field/factory wiring	No. 30 – 14 AWG	300 V	10 A	No. 20 – 12 AWG for PE
CSA ratings		No. 30 – 14 AWG	300 V	10 A	No. 20 – 12 AWG for Ground
Approvals					

Std. pack	G	T	Poles	Part no. unmarked	Part no. marked
Spacing: 5.00 mm					
50	12.50	7.50	8	25.154.2253.0	25.154.0253.0
50	17.50	12.50	12	25.154.2353.0	25.154.0353.0
50	22.50	17.50	16	25.154.2453.0	25.154.0453.0
50	27.50	22.50	20	25.154.2553.0	25.154.0553.0
50	32.50	27.50	24	25.154.2653.0	25.154.0653.0
50	37.50	32.50	28	25.154.2753.0	25.154.0753.0
50	42.50	37.50	32	25.154.2853.0	25.154.0853.0
20	47.50	42.50	36	25.154.2953.0	25.154.0953.0
20	52.50	47.50	40	25.154.3053.0	25.154.1053.0
44 to 80pole upon request					

Initiator connectors **Spacing: 5.00 mm**	⏚ jumpered	**Type 8195 V/... VB1** unmarked	marked
50	2 PE + 6	25.154.6253.0	25.154.4253.0
50	3 PE + 9	25.154.6353.0	25.154.4353.0
50	4 PE + 12	25.154.6453.0	25.154.4453.0
50	5 PE + 15	25.154.6553.0	25.154.4553.0
50	6 PE + 18	25.154.6653.0	25.154.4653.0
50	7 PE + 21	25.154.6753.0	25.154.4753.0
50	8 PE + 24	25.154.6853.0	25.154.4853.0
50	9 PE + 27	25.154.6953.0	25.154.4953.0
20	10 PE + 30	25.154.7053.0	25.154.5053.0
11 PE + 33 up to 20 PE + 60 upon request			

Bore hole plan **Type 8195 D/...** and **Type 8195 V/...**

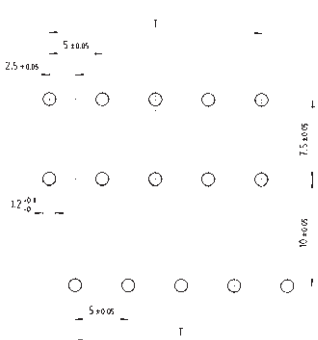

PC board connectors, rising cage clamp system
Spacing: 7.50 mm

wiecon PCB

Rated cross section:
4.0 mm²

Rated current:
30 A

Connection range:
0.14 – 6.0 mm² solid/
0.14 – 4.0 mm² fine stranded

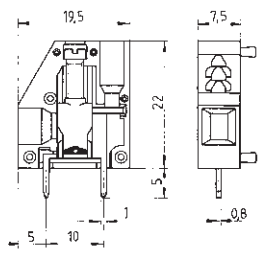

Material:
Insulating housing: PA 66/6 gray, UL 94-V-0
Clamping body: zinc-plated steel
Contact clip with solder pin:
tin-plated E copper
Clamping screw: zinc-plated steel

Rated voltages:
Spacing: 7.50 mm
500 V/6 kV/3 – Overvoltage category III
1000 V/6 kV/2 – Overvoltage category II
1000 V/6 kV/1 – Overvoltage category I

Spacing: 10.00 mm, UL 600 V, CSA 600 V
690 V/8 kV/3 – Overvoltage category III
1000 V/8 kV/2 – Overvoltage category II
1000 V/8 kV/1 – Overvoltage category I

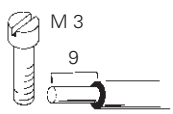

Solder pin 0.8 x 1.0 mm
Bore hole Ø 1.3 mm

Type 8375
wire horizontal to PC board

Rated voltages VDE 0110		No. 22/30 – 10 AWG	300 V 30/35 A
UL ratings	field/factory wiring	No. 22 – 10 AWG	300 V/600 V* 30 A
CSA ratings			
Approvals			

		Type	Part no.	Std. pack
Spacing: 7.50 mm				
Single poles, snap together	1pole	8375	25.700.0153.0	100
Accessories				
Spacing: 10.00 mm				
Spacer (to increase the contact spacing from 7.50 to 10.00 mm)			07.300.2753.0	50
Test plug, red		ST 2/2,3	Z5.553.2921.0	10
Marking strips	unmarked	9705 A/7,5/10	04.242.7553.0	25
1 – 10, 11 – 20 usw. 991 – 999	[1]marked	9705 A/7,5/10 B	04.842.7553.0	25
Tear-off marking strip	marked. 1, 2, 3 ... 0	9704 A/1-0 B	04.841.2150.0	25
Single tags	unmarked	9705 A	04.242.0850.0	500
	[1]marked	9705 AB	04.842.0850.0	500

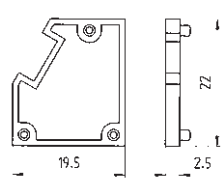

[1] marking upon request

* 600 V with spacer between each pole

Rated cross section: 10.0 mm²

Rated current: 59 A
(related to an ambient temperature of 20°C,
the rated cross section and max. number of poles)

Connection range:
0.50 – 10.0 mm² ein-/fine stranded

400 V/6 kV/3 – Overvoltage category III
690 V/6 kV/2 – Overvoltage category II
1000 V/6 kV/1 – Overvoltage category I

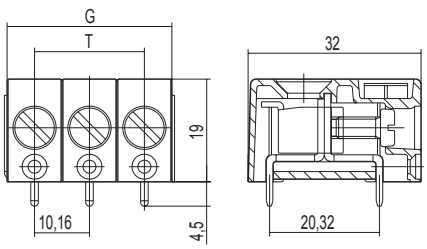

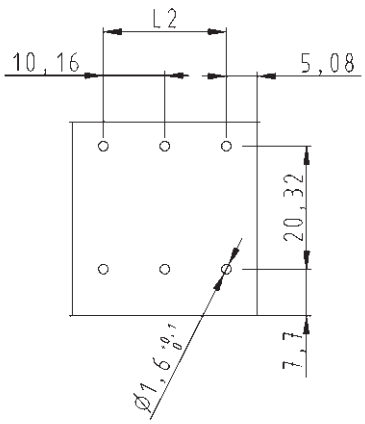

Solder pin 1.2 x 1.4 mm
Bore hole Ø 1.6 mm

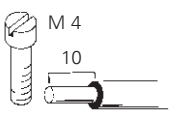

available from 09/2001

Type 7573 L2.../W

Rated voltages VDE 0110				
UL ratings	field/factory wiring	No. 22 – 8 AWG	300 V	10 A
CSA ratings		No. 22 – 8 AWG	300 V	10 A
Approvals				

Std. pack	G	T	Poles	Part no.	
Spacing: 10.16 mm				unmarked	
50	10.16		1	27.002.6153.0	
50	30.48	20.32	3	27.002.6353.0	
50	40.64	30.48	4	27.002.6453.0	

wiecon PCB

Rated cross section:
10 mm²

Rated current:
57 A
(related to an ambient temperature of 20°C,
the rated cross section and max. number of poles)

Connection range:
0.50 – 16.0 mm² solid/
0.50 – 10.0 mm² fine stranded

Rated voltages:
4 solder pins
250 V/4 kV/3 – Overvoltage category III
400 V/4 kV/2 – Overvoltage category III
630 V/4 kV/2 – Overvoltage category II

2 solder pins
630 V/8 kV/3 – Overvoltage category III
800 V/8 kV/2 – Overvoltage category III
1000 V/8 kV/2 – Overvoltage category II

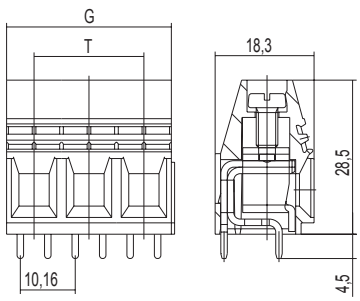

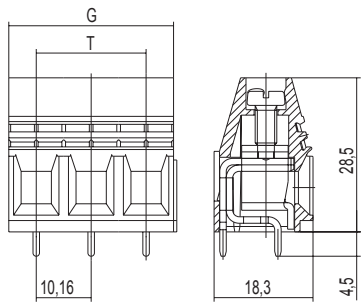

Solder pin 1.2 x 1.2 mm
Bore hole Ø 1.6 mm

4 solder pins

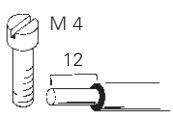

Solder pin 1.2 x 1.2 mm
Bore hole Ø 1.6 mm

2 solder pins

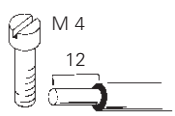

		Type 7572 L4		Type 7572 L2	
Rated voltages VDE 0110					
UL ratings	field/factory wiring	No. 22 – 8 AWG	300/150 V 10/40 A	No. 22 – 8 AWG	300/150 V 10/40 A
CSA ratings		No. 22 – 8 AWG	300 V 10 A	No. 22 – 8 AWG	300 V 10 A
Approvals					

Std. pack	G	T	Poles	Part no.	Part no.
Spacing: 10.16 mm					unmarked
50	20.32	10.16	2	27.002.0253.0	27.002.2253.0
50	30.48	20.32	3	27.002.0353.0	27.002.2353.0

Rated cross section:
10 mm²

Rated current:
57 A
(related to an ambient temperature of 20°C,
the rated cross section and max. number of poles)

Connection range:
0.50 – 16.0 mm² solid/
0.50 – 10.0 mm² fine stranded

Rated voltages:
1000 V/8 kV/3 – Overvoltage category III

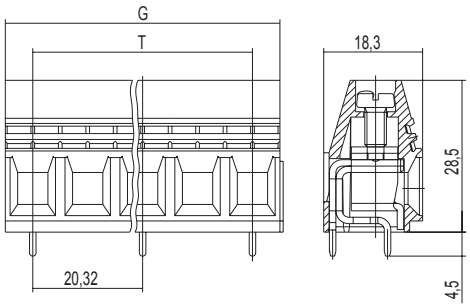

Solder pin 1.2 x 1.2 mm
Bore hole Ø 1.6 mm

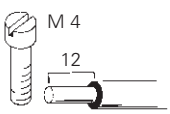

Type 7572 L2

Rated voltages VDE 0110

CSA
Approvals

No. 22 – 6 AWG 600 V 60 A

Std. pack	G	T	Poles	Part no.	
Spacing: 20.32 mm				unmarked	
50	30.48	20.32	2	27.002.4253.0	
50	50.64	40.48	3	27.002.4353.0	

PC board connectors, rising cage clamp system
Spacing: 5.08 mm

wiecon PCB

Rated cross section:
4.0 mm² solid/
2.5 mm² fine stranded

Rated current type 8276: 26 A
Rated current type 8276 TKS: 15 A

Connection range:
0.14 – 4.0 mm² solid/
0.14 – 2.5 mm² fine stranded

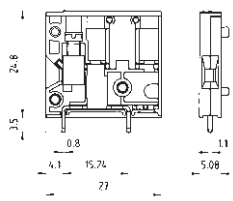

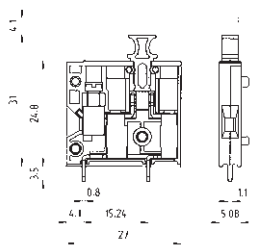

250 V/4 kV/3 – Overvoltage category III
400 V/4 kV/2 – Overvoltage category II
1000 V/4 kV/1 – Overvoltage category I

Solder pin 0.8 x 1.1 mm
Bore hole Ø 1.4 mm

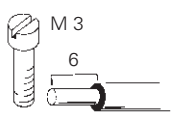

Solder pin 0.8 x 1.1 mm
Bore hole Ø 1.4 mm

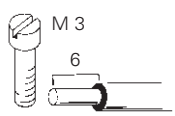

		Type 8276 Feed through block			Type 8276 TKS Plunger disconnect block		
Rated voltages VDE 0110							
UL ratings	field/factory wiring	No. 30 – 14 AWG	300 V	15/23 A	No. 30 – 14 AWG	300 V	15 A
CSA ratings		No. 30 – 14 AWG	300 V	20 A	No. 30 – 14 AWG	300 V	15 A
Approvals							

	Type	Part no.	Std. pack	Type	Part no.	Std. pack
Spacing: 5.08 mm						
Single poles, snap together 1pole Pre-assembled pole configurations upon request	8276	25.720.1353.0	100	8276 TKS	25.720.1453.0	100
Accessories						
Adhesive marking strips	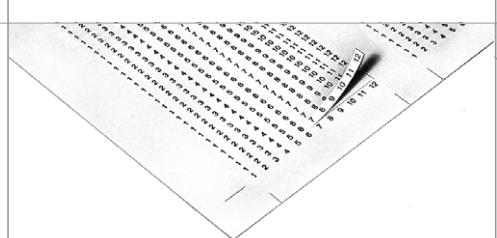			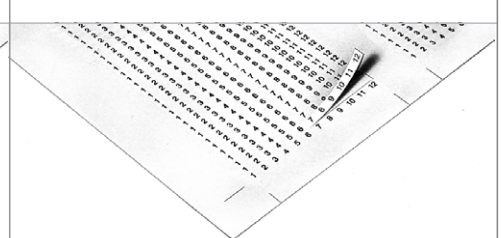		
	1 – 12	04.007.4089.0	1	1 – 12	04.007.4089.0	1
	13 – 24	04.007.4189.0	1	13 – 24	04.007.4189.0	1
	25 – 36	04.007.4289.0	1	25 – 36	04.007.4289.0	1
	37 – 48	04.007.4389.0	1	37 – 48	04.007.4389.0	1
	49 – 60	04.007.4489.0	1	49 – 60	04.007.4489.0	1
	61 – 72	04.007.4589.0	1	61 – 72	04.007.4589.0	1
	73 – 84	04.007.4689.0	1	73 – 84	04.007.4689.0	1
	85 – 96	04.007.4789.0	1	85 – 96	04.007.4789.0	1
	97 – 108	04.007.4889.0	1	97 – 108	04.007.4889.0	1
Test plug, red	ST 2/2,3	Z5.553.2921.0		ST 2/2,3	Z5.553.2921.0	10
	Material: Type 8276 Insulating housing: PA 66/6 gray, UL 94-V-0 Clamping body: nickel-plated brass Contact clip with solder pin: tin-plated E copper Clamping screw: zinc-plated steel			Material: Type 8276 TKS Insulating housing: PA 66/6 gray, UL 94-V-0 Plunger: PA 66/6 orange, UL 94-V-0 Clamping body: nickel-plated brass Contact spring with solder pin: special copper alloy, tin-plated Clamping screw: zinc-plated steel Disconnect knife: tin-plated E copper		

PC board connectors, rising cage clamp system
Spacing: 5.08 mm

Rated cross section:
2.5 mm²

Rated current:
6.3 A**

Connection range:
0.14 – 4.0 mm² solid/
0.14 – 2.5 mm² fine stranded

250 V/4 kV/3 – Overvoltage category III
*690 V/4 kV/2 – Overvoltage category II
1000 V/4 kV/1 – Overvoltage category I

* max. 600 V for ungrounded networks or expected overvoltage ≤ 4 kV

** voltage and current ratings are determined by the inserted G fuse.
6.3 A up to a loss of 1.6 W

For the selection and use of G fuses follow IEC 60 127-2/DIN VDE 0820 T2.

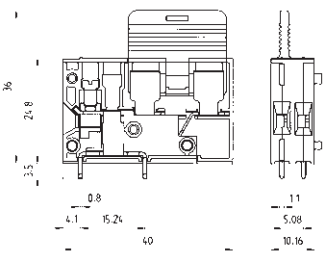

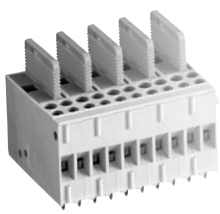

Solder pin 0.8 x 1.1 mm
and 0.5 x 1.1 mm
Bore hole Ø 1.4 mm

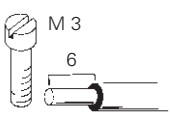

Type 8276 Si-D

Ground feed through block (for 5 x 20 fuses)

Rated voltages VDE 0110	No. 30 – 14 AWG	300 V 6,3 A
UL ratings	No. 30 – 14 AWG	300 V 6,3 A
CSA ratings		
Approvals		

	Type	Part no.	Std. pack
Spacing: 5.08 mm			
Single poles, snap together 1pole Pre-assembled pole configurations upon request	8276 Si-D	25.720.1653.0	100
Accessories			
Adhesive marking strips	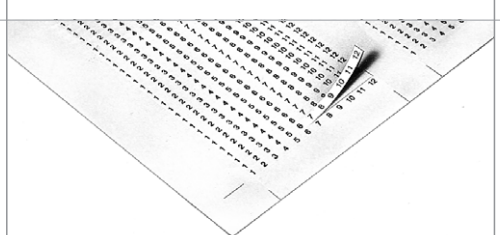		
	1 – 12	04.007.4089.0	1
	13 – 24	04.007.4189.0	1
	25 – 36	04.007.4289.0	1
	37 – 48	04.007.4389.0	1
	49 – 60	04.007.4489.0	1
	61 – 72	04.007.4589.0	1
	73 – 84	04.007.4689.0	1
	85 – 96	04.007.4789.0	1
	97 – 108	04.007.4889.0	1
unmarked for own marking		04.007.3989.0	1
Test plug, red	ST 2/2,3	Z5.553.2921.0	10
	Material: Type 8276 Si-D Insulating housing: PA 66/6 gray, UL 94-V-0 Fuse holder: PA 66/6 orange, UL 94-V-0 Clamping body: nickel-plated brass Contact clip with solder pin: special copper alloy, tin-plated Contact spring with solder pin: special copper alloy, tin-plated Clamping screw: zinc-plated steel		

Type 8105 B, *RAST 5* connection, PC board pluggables, tab connectors

wiecon PCB

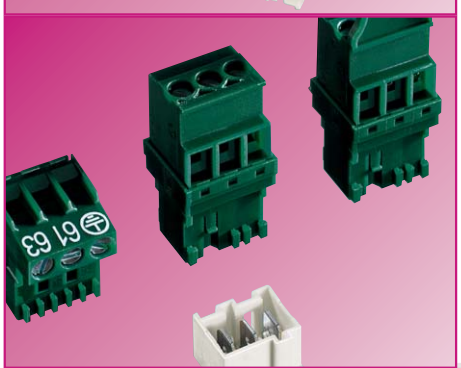

Technological advancements often appear first in electrical appliances. Printed circuit boards, which centralize and conduct signal and power to equipment, serve as a primary and essential function in this technology. Wieland Electric has designed advanced pluggable PC board screw connectors as an integral component to printed circuit boards. Using RAST 5 technology, a European standard for appliance wiring and component design, Wieland offers a wide selection of PC board connectors for the manufacture of advanced electrical appliances.

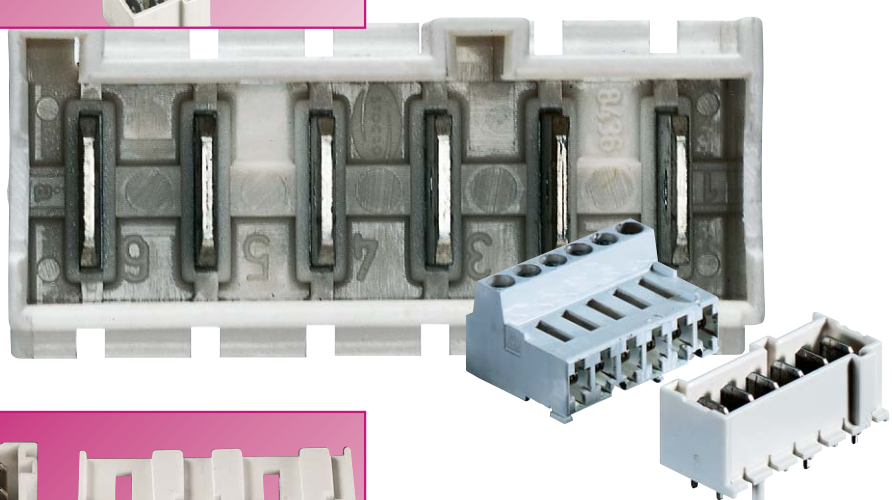

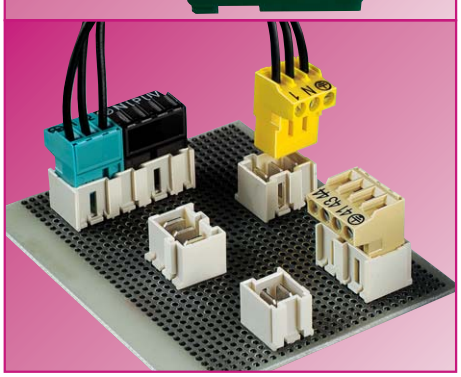

The fixed coding facilities (without coding strip) of the 8105 type are designed for the RAST 5 standard and meets all current requirements of "white goods". The same applies for the different versions, i.e. with vertical connection right and left in addition to the horizontal one, or flat blade connectors in straight design.

They are all based on a rated current of 10A. The pole configurations range from 2 to 7 poles. Both fine stranded wires of 0.14 mm^2 to 2.5 mm^2 , with and without ferrules, and solid wires of 0.14 mm^2 to 4 mm^2 can be connected.

wiecon

		Page 382	Page 382	Page 383	Page 383	Page 383
			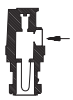			
Type		**8105 B/... C...**	**8105 B/...C...VR**	**8105 B/...C...VL**	**8105 F/...GC...**	**8105 F/WC...**
Spacing	**mm**	**5.00**	**5.00**	**5.00**	**5.00**	**5.00**
Cross section	**mm²**	**2.5**	**2.5**	**2.5**	**–**	**–**
Number of poles		**2 – 7**	**2 – 7**	**2 – 7**	**2 – 7**	**2 – 7**

RAST 5
Coding plan

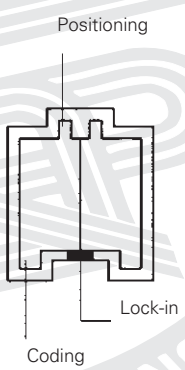

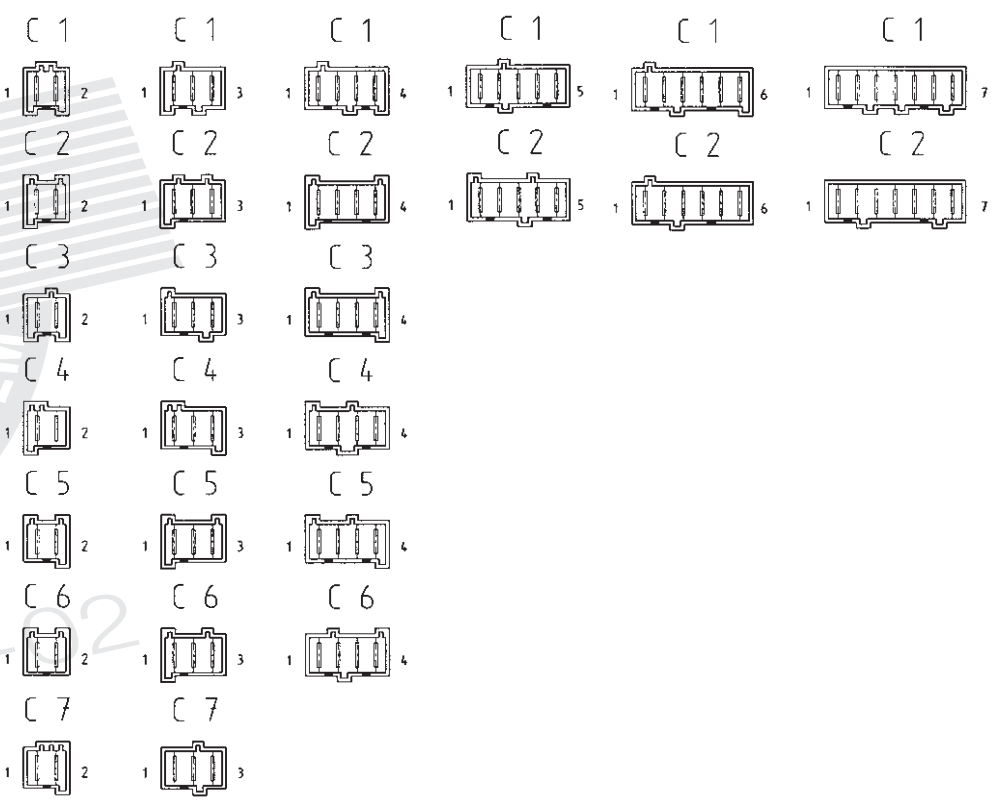

IERTES
O 9001
SSICHERUNGSSYSTEM
-Nr. 14 194-02

RAST 5
PC board pluggables, spacing: 5.00 mm

wiecon PCB

Rated cross section:
2.5 mm²

Rated current: 10 A

Connection range:
0.20 – 4.0 mm² solid/
0.14 – 2.5 mm² fine stranded

250 V/4 kV/3 – Overvoltage category III
400 V/4 kV/2 – Overvoltage category II
1000 V/4 kV/1 – Overvoltage category I

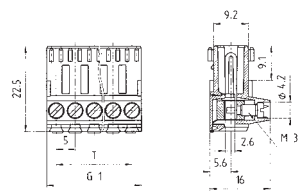

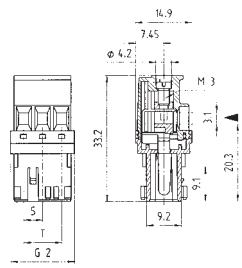

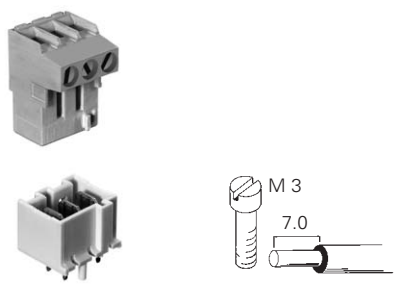

Type 8105 B/... C... OB

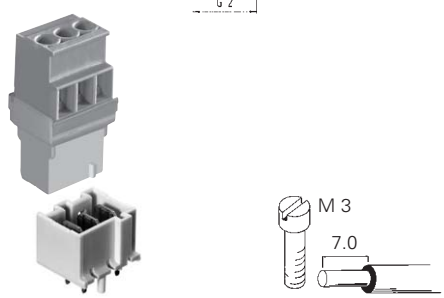

Type 8105 B/... C... VR OB

Rated voltages VDE 0110							
UL ratings			No. 26 – 12 AWG	300 V	10 A	No. 26 – 12 AWG	300 V	10 A
CSA ratings			No. 26 – 12 AWG	300 V	10 A	No. 26 – 12 AWG	300 V	10 A
Approvals							

Std. pack	Poles	Code	Part no.	Part no.
PC board pluggables / tab connectors			unmarked	unmarked
100	2	C0	15.000.0253.0	15.020.0253.0
100		C1	15.001.0253.0	15.021.0253.0
100		C2	15.002.0253.0	15.022.0253.0
100		C3	15.003.0253.0	15.023.0253.0
100		C4	15.004.0253.0	15.024.0253.0
100		C5	15.005.0253.0	15.025.0253.0
100		C6	15.006.0253.0	15.026.0253.0
100		C7	15.007.0253.0	15.027.0253.0
100	3	C0	15.000.0353.0	15.020.0353.0
100		C1	15.001.0353.0	15.021.0353.0
100		C2	15.002.0353.0	15.022.0353.0
100		C3	15.003.0353.0	15.023.0353.0
100		C4	15.004.0353.0	15.024.0353.0
100		C5	15.005.0353.0	15.025.0353.0
100		C6	15.006.0353.0	15.026.0353.0
100		C7	15.007.0353.0	15.027.0353.0
50	4	C0	15.000.0453.0	15.020.0453.0
50		C1	15.001.0453.0	15.021.0453.0
50		C2	15.002.0453.0	15.022.0453.0
50		C3	15.003.0453.0	15.023.0453.0
50		C4	15.004.0453.0	15.024.0453.0
50		C5	15.005.0453.0	15.025.0453.0
50		C6	15.006.0453.0	15.026.0453.0
50	5	C0	15.000.0553.0	15.020.0553.0
50		C1	15.001.0553.0	15.021.0553.0
50		C2	15.002.0553.0	15.022.0553.0
50	6	C0	15.000.0653.0	15.020.0653.0
50		C1	15.001.0653.0	15.021.0653.0
50		C2	15.002.0653.0	15.022.0653.0
50	7	C0	15.000.0753.0	15.020.0753.0
50		C1	15.001.0753.0	15.021.0753.0
50		C2	15.002.0753.0	15.022.0753.0

RAST 5
Tab connectors

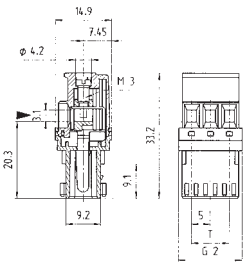

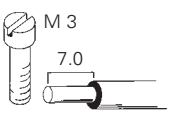

Bore hole plan, side view

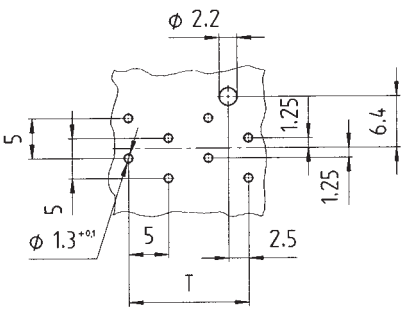

No positioning stud for version
8105 F/... WC ...OB

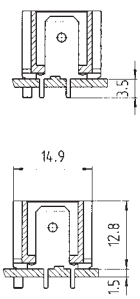

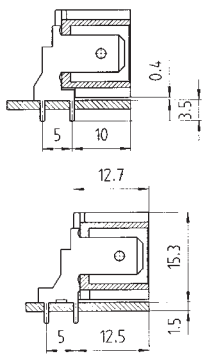

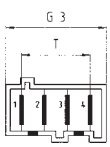

Type 8105 B/... C... VL OB

No. 26 – 12 AWG	300 V	10 A
No. 26 – 12 AWG	300 V	10 A

Type 8105 F/... GC ... OB / 8105 F/... WC... OB

No. 26 – 12 AWG	300 V	10 A
No. 26 – 12 AWG	300 V	10 A

Rated voltages VDE 0110
UL ratings
CSA ratings
Approvals

Part no.	Std. pack	G1	G2	G3	T	Part no.	Part no.
unmarked					***RAST 5***	unmarked	unmarked
15.010.0253.0	100	10	11.8		5		
15.011.0253.0	100	10	11.8	12	5	15.301.0258.9	15.311.0258.9
15.012.0253.0	100	10	11.8	12	5	15.302.0258.9	15.312.0258.9
15.013.0253.0	100	10	11.8	12	5	15.303.0258.9	15.313.0258.9
15.014.0253.0	100	10	11.8	12	5	15.304.0258.9	15.314.0258.9
15.015.0253.0	100	10	11.8	12	5	15.305.0258.9	15.315.0258.9
15.016.0253.0	100	10	11.8	12	5	15.306.0258.9	15.316.0258.9
15.017.0253.0	100	10	11.8	12	5	15.307.0258.9	15.317.0258.9
15.010.0353.0	100	15	16.8		10		
15.011.0353.0	100	15	16.8	17	10	15.301.0358.9	15.311.0358.9
15.012.0353.0	100	15	16.8	17	10	15.302.0358.9	15.312.0358.9
15.013.0353.0	100	15	16.8	17	10	15.303.0358.9	15.313.0358.9
15.014.0353.0	100	15	16.8	17	10	15.304.0358.9	15.314.0358.9
15.015.0353.0	100	15	16.8	17	10	15.305.0358.9	15.315.0358.9
15.016.0353.0	100	15	16.8	17	10	15.306.0358.9	15.316.0358.9
15.017.0353.0	100	15	16.8	17	10	15.307.0358.9	15.317.0358.9
15.010.0453.0	50	20	21.8		15		
15.011.0453.0	50	20	21.8	22	15	15.301.0458.9	15.311.0458.9
15.012.0453.0	50	20	21.8	22	15	15.302.0458.9	15.312.0458.9
15.013.0453.0	50	20	21.8	22	15	15.303.0458.9	15.313.0458.9
15.014.0453.0	50	20	21.8	22	15	15.304.0458.9	15.314.0458.9
15.015.0453.0	50	20	21.8	22	15	15.305.0458.9	15.315.0458.9
15.016.0453.0	50	20	21.8	22	15	15.306.0458.9	15.316.0458.9
15.010.0553.0	50	25	26.8		20		
15.011.0553.0	50	25	26.8	27	20	15.301.0558.9	15.311.0558.9
15.012.0553.0	50	25	26.8	27	20	15.302.0558.9	15.312.0558.9
15.010.0653.0	50	30	31.8		25		
15.011.0653.0	50	30	31.8	32	25	15.301.0658.9	15.311.0658.9
15.012.0653.0	50	30	31.8	32	25	15.302.0658.9	15.312.0658.9
15.010.0753.0	50	35	36.8		30		
15.011.0753.0	50	35	36.8	37	30	15.301.0758.9	15.311.0758.9
15.012.0753.0	50	35	36.8	37	30	15.302.0758.9	15.312.0758.9

RAST 5 connection
Potential distributor for PC board, spacing: 5.00 mm

wiecon PCB

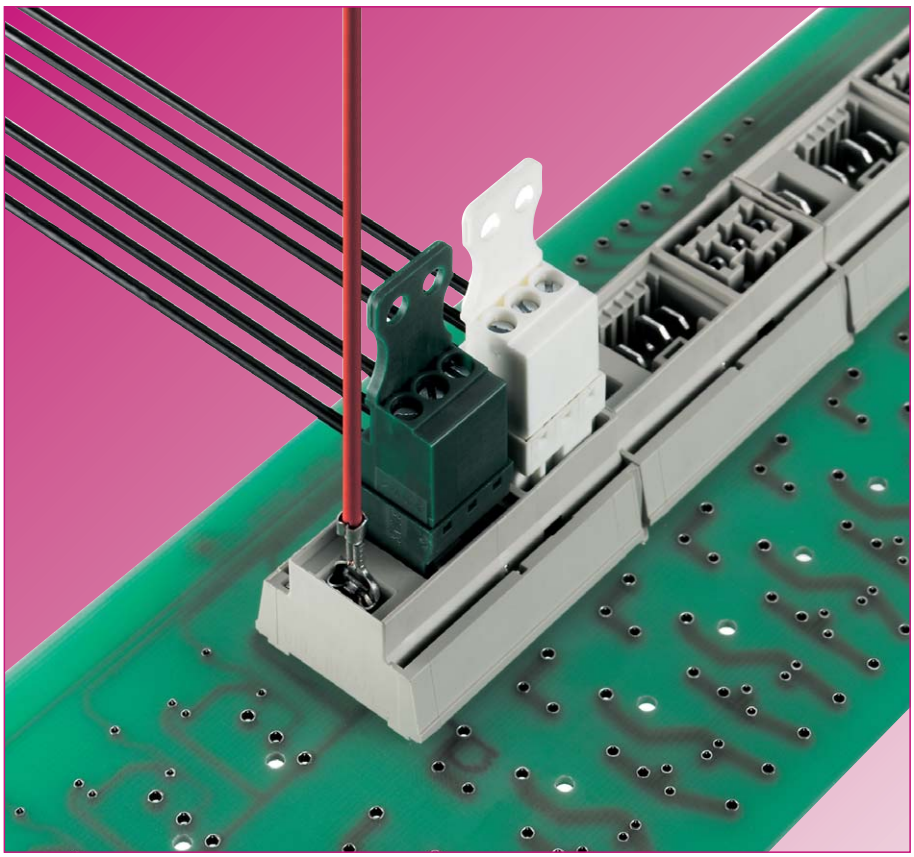

Custom connection modules in *RAST 5* connection style

Main field of application:
RAST 5 connection style:
"white" and "red goods"

Major benefits of *RAST 5*:
- fixed integrated coding
- potential for mismating eliminated
- available in different colors
  (benefit: plug connectors and headers are immediately and correctly assigned e. g. in assembly line mounting)
- ideal for off-site harness assembly

Wieland offers custom modifications e. g. *RAST 5* connection module units with
- integrated jumper
  (e. g. ground connection)
- plug connectors and headers in the connection module for potential distribution (current-carrying part must always be the plug connector)
- any plug connector/header combination in different pole configurations
- different colors

Rated cross section:
2.5 mm²

Rated current: 10 A

Connection range:
0.14 – 4.0 mm² solid/
0.14 – 2.5 mm² fine stranded

250 V/2.5 kV/3 – Overvoltage category III
*690 V/2.5 kV/2 – Overvoltage category II
1000 V/2.5 kV/1 – Overvoltage category I

Number of poles: 2 – 7

* max. 600 V for ungrounded networks or expected overvoltage ≤ 4 kV

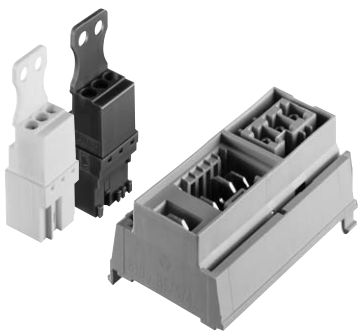

Type 8105 BF/3/4

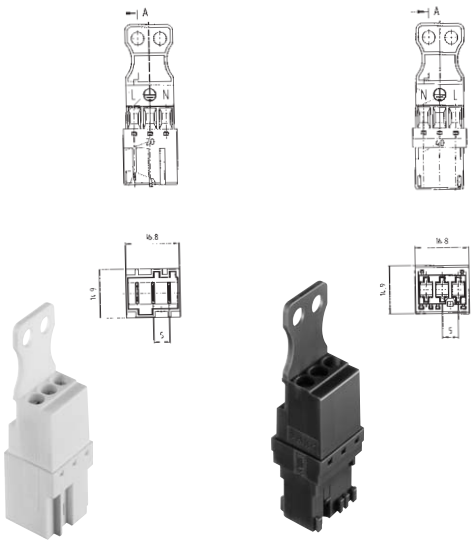

Header

Plug

Rated voltages VDE 0110
UL ratings
CSA ratings – pending
Approvals

	Type	Part no.	Std. pack	Type	Part no.	Std. pack
Spacing: 5.00 mm						
		99.243.3564.7	100	Header with handle, white	99.239.3564.7	100
				Plug with handle, green	99.259.3564.7	100

Termination module
TM 6 / TM 12

wiecon TER

External wiring

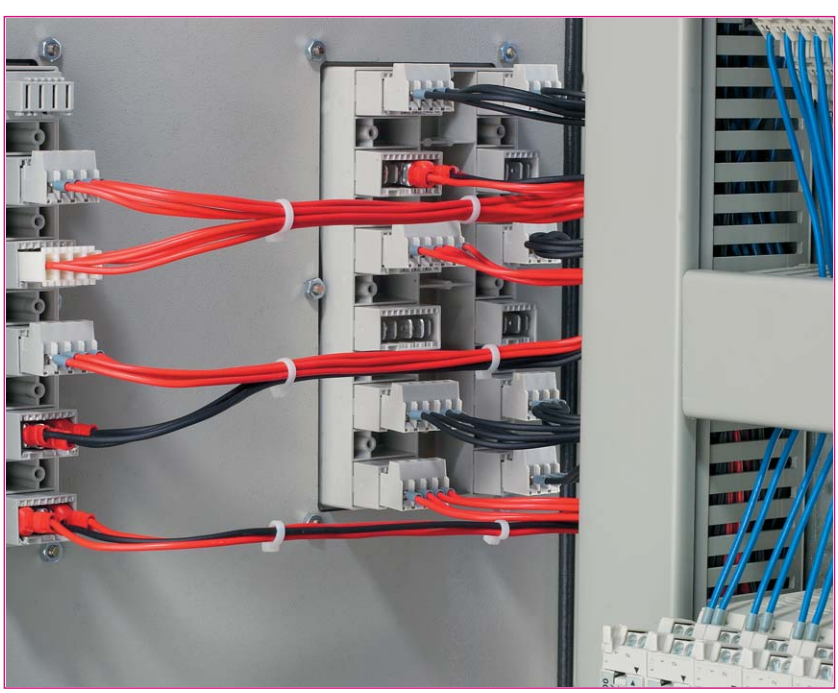

Internal wiring

RAST 5 connection (IP 54 rated) Termination Modules for Industrial Plant Construction

The time consuming hard wiring cable connections to control cabinets can now be avoided. The modular *RAST 5* termination module by Wieland is a low cost and faster method to connect control cabinets for industrial plant construction.

This wiring system with its pre-assembled cable harness and coded connectors was developed to optimize the "start-up" of industrial plants.

Because the wires and codings are 100 percent tested, manufacturing is time and cost efficient and installation is vastly simplified.

The benefits compared to former PG gland wiring are obvious:

- installation times reduced by 80 % compared to traditional techniques
- time and cost saving pre-assembled cables
- Cable connections are IP 54 rated
- no errors as mismating is impossible
- no specialists required to complete external wiring

wiecon

The external *RAST 5* connectors are available in 3 to 5 pole configurations. Their secure coding prevents mismating. By means of marking labels the headers can be quickly assigned to the plug connectors in multi-pole modules.

External connection lines with special connectors, which provide sealing with IP 54 protection, are delivered with pre-assembled custom cables.

The other cable ends can also be fitted with further components such as DIN outlet boxes for temperature signal conditioners.

Internal wiring is completed either with insulated
- *RAST 5* tab connectors
- *RAST 5* screw connectors
- *RAST 5* crimp connectors

System design
2 basic modules are available
- module with 6 slots = TM 6
- module with 12 slots = TM 12

All these versions are coded to prevent mismating, meaning that the slots in the module are all different. Two different versions are available for each type.

Cable types for the external lines

The following standard cable types are available:
- Ölflex Quattro 150 in 3, 4 and 5 pole configurations
- Ölflex Quattro 150 CY (shielded version) in 3, 4, and 5 pole configurations

The system provides a large number of combinations of modules, codings and cables and enables various custom wiring solutions.
Depending on the order quantities, special module versions and cables are also possible.

To try out the variations, you can order the function set TM 6-5 with cables.

Technical information on the TM modules and external cables:

Connector cross section:
1.5 mm^2 (standard)

Rated voltage:
250 V/4 kV/3 – Overvoltage category III

Rated current: 10 A

Approvals (pending):
UL, CSA and VDE

TM 6

The TM6 module is available in versions:

- 6 slots, 3pole = type **TM 6-3**
- 6 slots, 4pole = type **TM 6-4**
- 6 slots, 5pole = type **TM 6-5**

TM 12

The TM 12 module is available in versions:
12 slots in two rows of 6

- 3pole / 3pole = type **TM 12-33**
- 3pole / 4pole = type **TM 12-34**
- 4pole / 4pole = type **TM 12-44**
- 3pole / 5pole = type **TM 12-35**

Example of TM module 6/12 in a control cabinet

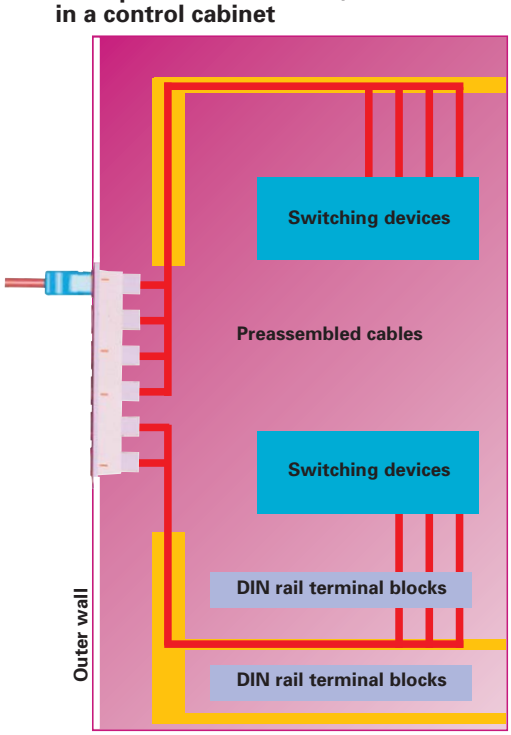

Function set TM 6

wiecon TER

Function set consisting of
1 x TM 6-5, incl. cable set 6 x 10 m
type Ölflex Quattro 5 x 1.5 mm²
with one 5pole connector each in tab version

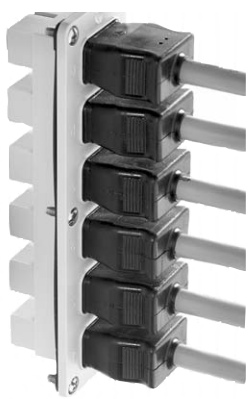

6 slots, 3pole =
type **TM 6-3**

6 slots, 4pole =
type **TM 6-4**

Typ TM 6-5 F

Type	Part no.	Std. pack
TM 6-5 F	99.483.0000.0	

Typ TM 6-3

Type	Part no.	Std. pack
TM 6-3 coding upon request		upon request

Typ TM 6-4

Type	Part no.	Std. pack
TM 6-4 coding upon request		upon request

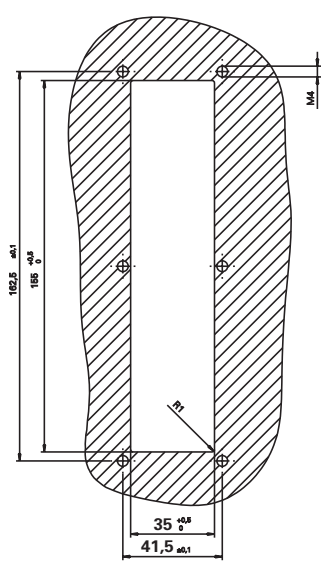

or bore hole
D = 3.8 mm for
self-tapping
screw
05.084.0212.0

Outer dimensions, cut-out and bore hole configuration are the same for all TM 6 versions

6 slots, 5pole =
type **TM 6-5**

Typ TM 6-5

Type	Part no.	Std. pack
TM 6-5		upon
coding upon request		request

TM 6 cover

fits all pole configurations

Type	Part no.	Std. pack
TM 6-X	15.800.9956.0	

Locking piece

Type	Part no.	Std. pack
3pole	05.562.5957.1	
4pole	05.562.6557.1	
5pole	05.562.8257.1	

Function set TM 12

wiecon TER

12 slots,
in two rows of 6
3pole / 3pole =
type **TM 12-33**

12 slots,
in two rows of 6
3pole / 4pole =
type **TM 12-34**

12 slots,
in two rows of 6
4pole / 4pole =
type **TM 12-44**

Typ TM 12-33

Type	Part no.	Std. pack
TM 12-33 coding upon request		upon request

Typ TM 12-34

Type	Part no.	Std. pack
TM 12-34 coding upon request		upon request

Typ TM 12-44

Type	Part no.	Std. pack
TM 12-44 coding upon request		upon request

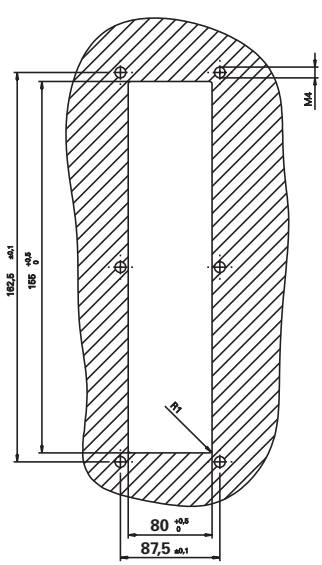

or bore hole
D = 3.8 mm for
self-tapping
screw
05.084.0212.0

Outer dimensions, cut-out and bore hole configuration are the same for all TM 6 versions

12 slots,
in two rows of 6
3pole / 5pole =
type **TM 12-35**

Typ TM 12-55

Type	Part no.	Std. pack
TM 12-35		upon
coding upon request		request

TM 12 cover

fits all TM 12-XX pole configurations

Type	Part no.	Std. pack
TM 12-XX	15.800.8856.0	

Locking piece

Type	Part no.	Std. pack
3pole	05.562.5957.1	
4pole	05.562.6557.1	
5pole	05.562.8257.1	

In-line connector (insulation displacement connection)
Spacing: 5.00/5.08 mm

wiecon ASI

Rated cross section:
0.75 mm²

Rated current:
3 A

Connection range:
0.50 – 0.75 mm² fine stranded

250 V/4 kV/3 – Overvoltage category III
400 V/4 kV/2 – Overvoltage category II
1000 V/4 kV/1 – Overvoltage category I

Current range:
from 3 mA up to 3 A

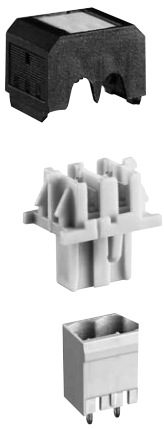

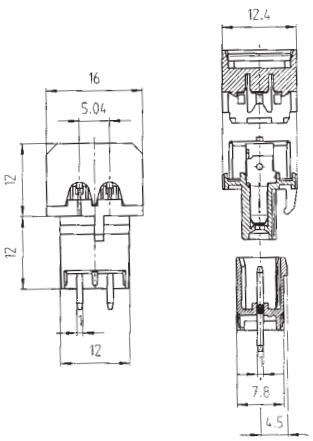

Solder pin 1.0 x 1.0 mm
Bore hole Ø 1.4 mm

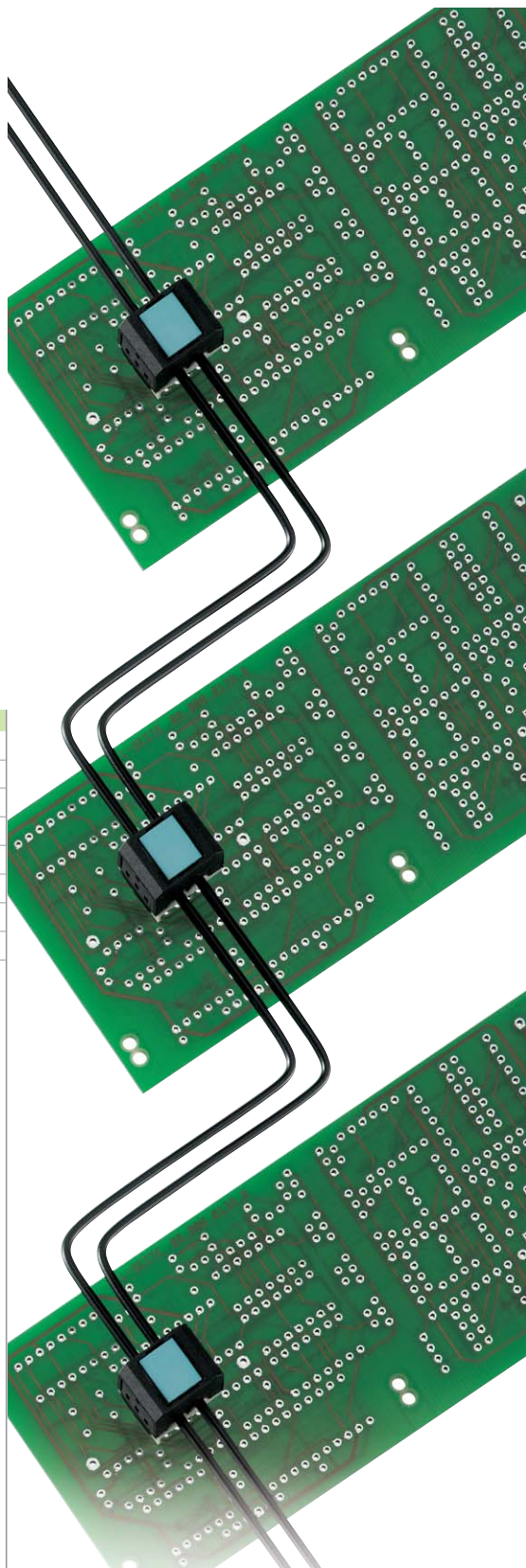

Typ 8113 BSK/2

Rated voltages VDE 0110				
UL ratings	field/factory wiring	No. 20 – 18 AWG	300 V	3 A
CSA ratings		No. 20 – 18 AWG	300 V	3 A
Approvals				

		Type	Part no.	Std. pack
Spacing: 5.00/5.08 mm				
ASI in-line connector	2pole			
Cover	black		25.399.9853.0	100
Cover	yellow		25.399.9853.8	100
Cover	red		25.399.9853.5	100
	(color of plug housing: gray)			
Marking tag	green		04.240.0953.0	100

Cables with PVE- and PE-insulated wires can be connected. For others consult factory. The fine stranded copper conductor must have a minimum wire diameter of 0.2 mm. The wire design is based on DIN VDE 0295.

Insulated header for PC boards
Spacing: 5.00/5.08 mm

Rated current:
12 A

250 V/4 kV/3 – Overvoltage category III
400 V/4 kV/2 – Overvoltage category II
1000 V/4 kV/1 – Overvoltage category I

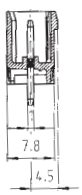

Solder pin 1.0 x 1.0 mm
Bore hole Ø 1.4 mm

Typ 8113 S/... G, 8213 S/... G

Rated voltages VDE 0110	plug-in vertical to PC board		
UL ratings	No. 22 – 12 AWG	250 V	15 A
CSA ratings	No. 22 – 12 AWG	300 V	15 A
Approvals			

Std. pack	G	T	Pole	Part no.
Spacing: 5.00 mm				unmarked
100	11.40	5	2	25.330.3253.0
Spacing: 5.08 mm				unmarked
100	11.56	5.08	2	25.350.3253.0

ASI in-line connector in insulation displacement technology

The ASI connector was developed for both ASI bus systems and LON and EIBA systems. In these systems, auxiliary supply and information are transferred via two wires of the bus line. The ASI in-line connector, a pluggable PC board connector with insulation displacement technology (IDC), facilitates the required signal tap-off from the actuator or sensor. Wiring of the ASI connector is both easy and effective. Both wires are inserted in the open clamping body of the connector and afterwards the cover is pressed on by means of a vertical closing tool. Connection to the printed circuit board is made by plugging it on to a 2 pole header.

Note:
Instead of the special ASI cable, much less expensive standard conductors are used.

Material:

Insulating housing: PA 66/6
CI-index: ≥ 600
Flammability class UL 94-V-0

Contact parts:
Plating: special copper alloy

Assembly:
Special tools for high-volume assembly upon request.

Marking accessories

wiecon

Material:
Polyamide 66/6
Color: black numbers on white background

Marking strip
Spacing: 10 mm

Type	Part no.	Std. pack
for 5 connectors, marked (every 2nd tag)		
9705 A/5/10/5 B	04.842.5553.0	25

Marking tag carrier
for WEB empty housing

04.242.1050.0 200

Marking tag
3-digit

Single tag

Type	Part no.	Std. pack
unmarked		
9705 A	04.242.0850.0	500
marked*		
9705 AB	04.842.0850.0	500

* Please indicate the required marking together with the part number!

Standard pack = 500 tags

Marking tag
8 digits

Single tag

Type	Part no.	Std. pack
unmarked		
9705 AL	04.242.1553.0	500
marked*		
9705 ALB	04.842.1553.0	500

* Please indicate the required marking together with the part number!

Standard pack = 500 tags

Marking strip
Spacing: 10 mm

Type	Part no.	Std. pack
unmarked		
9705 A/5/10	04.242.5053.0	25
marked*		
9705 A/5/10 B	04.842.5053.0	25
with extended marking surface		
9705 AL/5/10	04.242.5153.0	25

* Please indicate the required marking together with the part number!

Standard pack = 25 strips
= 250 tags

Marking strip
Spacing: 5 mm

Type	Part no.	Std. pack
9705 A/5/9 B	04.842.4953.0	25

Marking of the strips:
1 ... 9
1 ... 9

Standard pack = 25 strips
= 225 tags

Tear-off marking strip with 10 marking tags

Material: Polyamide 6/66 white/marking black	Marking per tree	Type	Part no.	Std. pack
unmarked		9704 A	04.241.1150.0	25
marked with the same number	1 1 1 1 1 1 1 1 1 1	9704 A/1 B	04.841.1150.0	25
	2 2 2 2 2 2 2 2 2 2	9704 A/2 B	04.841.1250.0	25
	3 3 3 3 3 3 3 3 3 3	9704 A/3 B	04.841.1350.0	25
	4 4 4 4 4 4 4 4 4 4	9704 A/4 B	04.841.1450.0	25
	5 5 5 5 5 5 5 5 5 5	9704 A/5 B	04.841.1550.0	25
	6 6 6 6 6 6 6 6 6 6	9704 A/6 B	04.841.1650.0	25
	7 7 7 7 7 7 7 7 7 7	9704 A/7 B	04.841.1750.0	25
	8 8 8 8 8 8 8 8 8 8	9704 A/8 B	04.841.1850.0	25
	9 9 9 9 9 9 9 9 9 9	9704 A/9 B	04.841.1950.0	25
	0 0 0 0 0 0 0 0 0 0	9704 A/0 B	04.841.2050.0	25
marked with consecutive numbers	1 2 3 4 5 6 7 8 9 0	9704 A/1-0 B	04.841.2150.0	25
marked with the same capital letters	A A A A A A A A A A	9704 A/AG B	04.841.2250.0	25
	B B B B B B B B B B	9704 A/BG B	04.841.2350.0	25
	C C C C C C C C C C	9704 A/CG B	04.841.2450.0	25
	D D D D D D D D D D	9704 A/DG B	04.841.2550.0	25
	E E E E E E E E E E	9704 A/EG B	04.841.2650.0	25
	F F F F F F F F F F	9704 A/FG B	04.841.2750.0	25
	G G G G G G G G G G	9704 A/GG B	04.841.2850.0	25
	H H H H H H H H H H	9704 A/HG B	04.841.2950.0	25
	I I I I I I I I I I	9704 A/IG B	04.841.3050.0	25
	J J J J J J J J J J	9704 A/JG B	04.841.3150.0	25
	K K K K K K K K K K	9704 A/KG B	04.841.3250.0	25
	L L L L L L L L L L	9704 A/LG B	04.841.3350.0	25
	M M M M M M M M M M	9704 A/MG B	04.841.3450.0	25
	N N N N N N N N N N	9704 A/NG B	04.841.3550.0	25
	O O O O O O O O O O	9704 A/OG B	04.841.3650.0	25
	P P P P P P P P P P	9704 A/PG B	04.841.3750.0	25
	Q Q Q Q Q Q Q Q Q Q	9704 A/QG B	04.841.3850.0	25
	R R R R R R R R R R	9704 A/RG B	04.841.3950.0	25
	S S S S S S S S S S	9704 A/SG B	04.841.4050.0	25
	T T T T T T T T T T	9704 A/TG B	04.841.4150.0	25
	U U U U U U U U U U	9704 A/UG B	04.841.4250.0	25
	V V V V V V V V V V	9704 A/VG B	04.841.4350.0	25
	W W W W W W W W W W	9704 A/WG B	04.841.4450.0	25
	X X X X X X X X X X	9704 A/XG B	04.841.4550.0	25
	Y Y Y Y Y Y Y Y Y Y	9704 A/YG B	04.841.4650.0	25
	Z Z Z Z Z Z Z Z Z Z	9704 A/ZG B	04.841.4750.0	25
marked with the same lower case letters	a a a a a a a a a a	9704 A/AK B	04.841.4850.0	25
	b b b b b b b b b b	9704 A/BK B	04.841.4950.0	25
	c c c c c c c c c c	9704 A/CK B	04.841.5050.0	25
	d d d d d d d d d d	9704 A/DK B	04.841.5150.0	25
	e e e e e e e e e e	9704 A/EK B	04.841.5250.0	25
	f f f f f f f f f f	9704 A/FK B	04.841.5350.0	25
	g g g g g g g g g g	9704 A/GK B	04.841.5450.0	25
	h h h h h h h h h h	9704 A/HK B	04.841.5550.0	25
	i i i i i i i i i i	9704 A/IK B	04.841.5650.0	25
	j j j j j j j j j j	9704 A/JK B	04.841.5750.0	25
	k k k k k k k k k k	9704 A/KK B	04.841.5850.0	25
	l l l l l l l l l l	9704 A/LK B	04.841.5950.0	25
	m m m m m m m m m m	9704 A/MK B	04.841.6050.0	25
	n n n n n n n n n n	9704 A/NK B	04.841.6150.0	25
	o o o o o o o o o o	9704 A/OK B	04.841.6250.0	25
	p p p p p p p p p p	9704 A/PK B	04.841.6350.0	25
	q q q q q q q q q q	9704 A/QK B	04.841.6450.0	25
	r r r r r r r r r r	9704 A/RK B	04.841.6550.0	25
	s s s s s s s s s s	9704 A/SK B	04.841.6650.0	25
	t t t t t t t t t t	9704 A/TK B	04.841.6750.0	25
	u u u u u u u u u u	9704 A/UK B	04.841.6850.0	25
	v v v v v v v v v v	9704 A/VK B	04.841.6950.0	25
	w w w w w w w w w w	9704 A/WK B	04.841.7050.0	25
	x x x x x x x x x x	9704 A/XK B	04.841.7150.0	25
	y y y y y y y y y y	9704 A/YK B	04.841.7250.0	25
	z z z z z z z z z z	9704 A/ZK B	04.841.7350.0	25
marked with the same symbols	+ + + + + + + + + +	9704 A/+ B	04.841.7450.0	25
	– – – – – – – – – –	9704 A/– B	04.841.7550.0	25
	/ / / / / / / / / /	9704 A// B	04.841.7650.0	25
	. . . .	9704 A/. B	04.841.7750.0	25
1 set of the same numbers = 10 x 25 strips = 2500 numbers	1 1 1 ... 0 0 0	111 to 000	04.841.9050.0	1
1 set of cap. letters = 26 x 25 strips = 6500 letters	A A A ... Z Z Z	A to Z GB	04.841.9150.0	1
1 set of lower case letters = 26 x 25 strips = 6500 letters	a a a ... z z z	a to z KB	04.841.9250.0	1

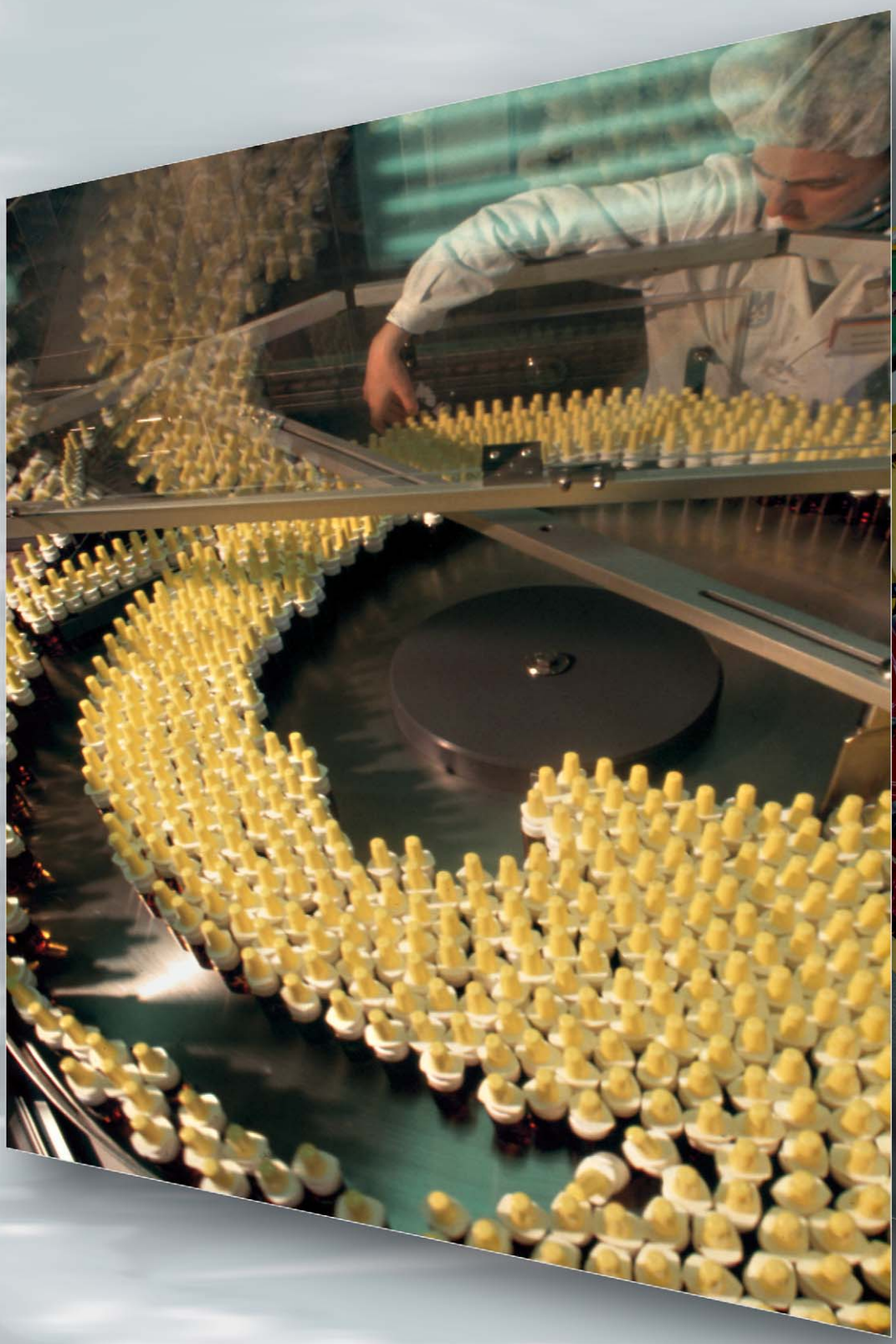

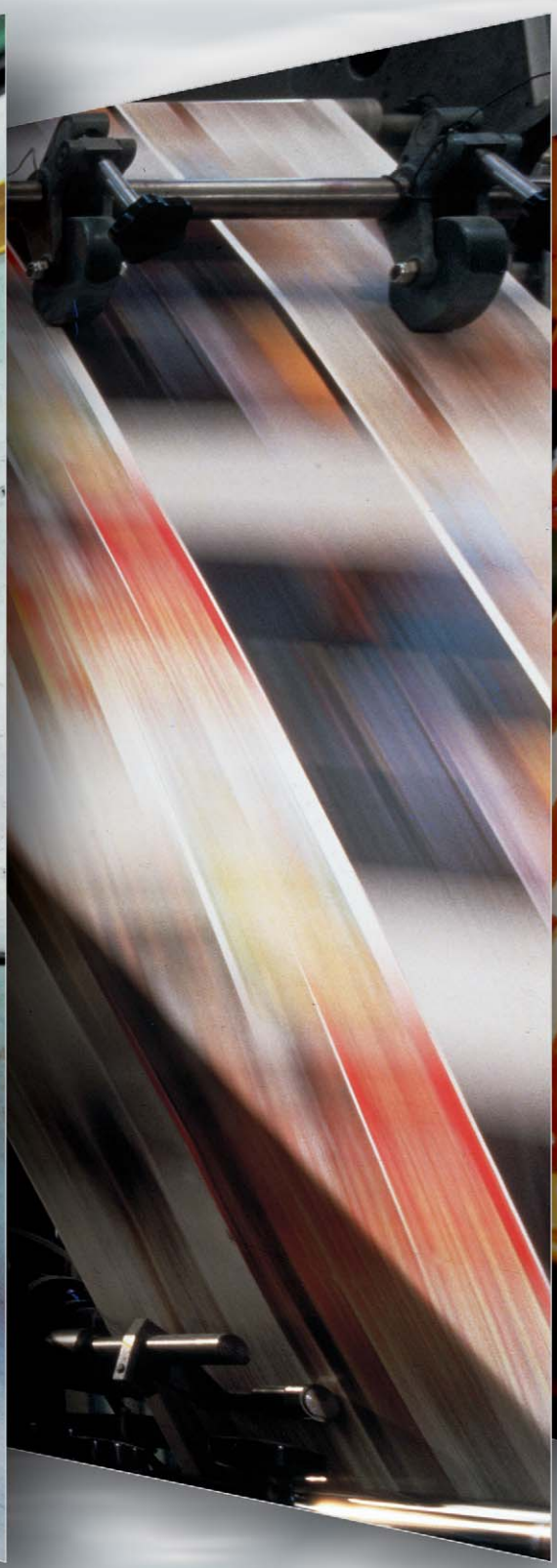

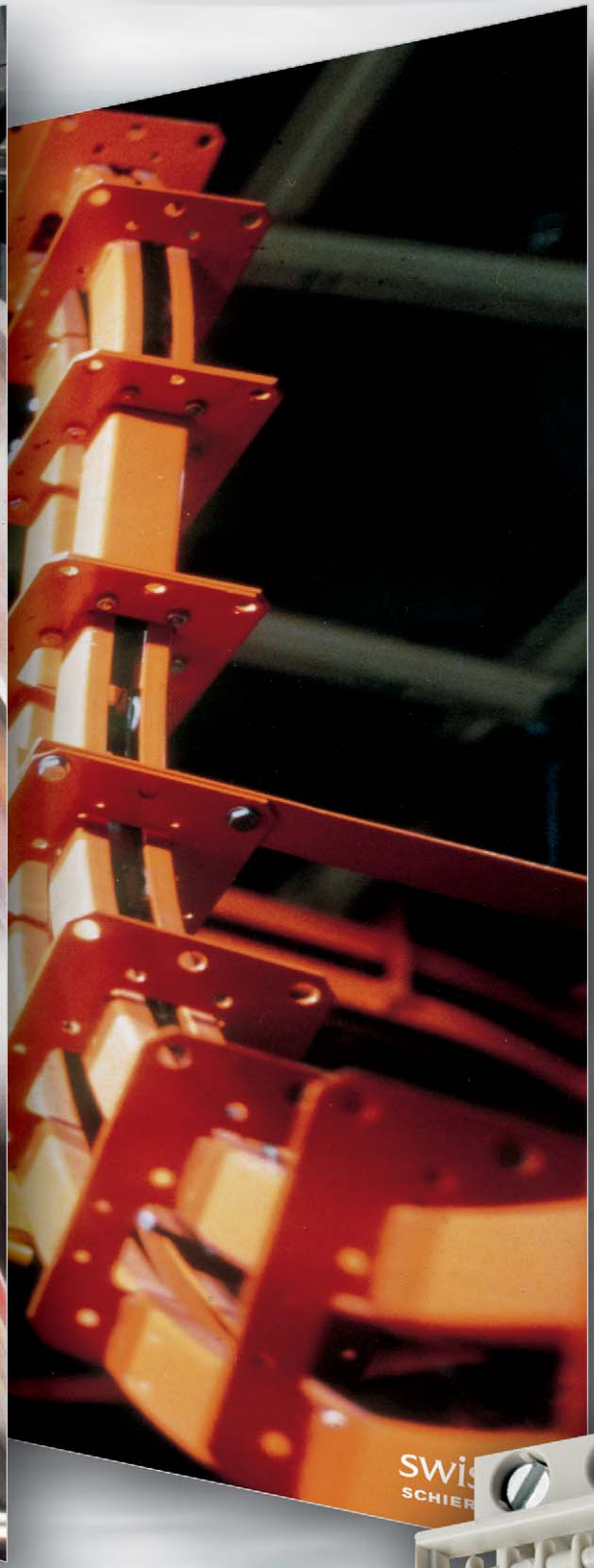

electronics

Electronic components

electronics

Decentralised I/O module	***ricos***	
Relay module Terminal relay 6,2 mm	***flare*** **WEG** **RAB** **WR** **WRS**	
Time relay	***flare*** **WRS**	
Solid state relays	***flare*** **WRS** **M-PB**	
Analog measurement technology Signal Conditioners	***dipos***	
Wieland Analog Systems	***cores*** **AKB** **AKT** **UET** **UET-P** **KSQ / *dipos*** KSQ	
Wieland power Supply Switched mode power supply units	***wipos*** **WPS** **NTU** **BGL** **FSR**	
Wieland function module	***cemos*** **TMS** **LPB / SBS** **SSM** **DNU / DSU** **DRA** **SSW**	
Wieland interface system	**D-SUB** **FLK** **S5**	
Electronic empty housing	***dipos*** **WEB** **WEB 1001/1002** **WEG** **wieBOX** **Subject to change without prior notice**	

Subject to change without prior notice

Content

electronics

●	Introduction to field bus systems	Page 404
● ***ricos***	Field bus couplers	Page 410
● ***ricos***	Decentralised I/O module	Page 412
● ***ricos***	Binary I/O modules	Page 416
● ***ricos***	Function modules	Page 422
● ***ricos***	Analogue I/O- modules	Page 424
● ***ricos***	Compact modules	Page 428
●	General Data	Page 430
●	Introduction to relay technology	Page 438
● ***flare***	Mechanical terminal relay	Page 442
● ***flare*** MOVE	Plug-in terminal relay	Page 444
● **WEG**	Single relay in enclosed housing	Page 446
● **RAB**	Multipole relay modules 24 V	Page 454
● **WR**	Multipole relay modules 115 V / 230 V	Page 456
● **WRS**	Wieland relay system	Page 460
● ***flare***	Time relay 6,2 mm	Page 462
● **WRS**	Time relay	Page 463
●	General data	Page 464
●	Introduction to solid state relay technology	Page 477
● ***flare***	Solid state relay	Page 478
● **WRS**	Solid state relay	Page 479
● **M-PB**	Multipole solid stat relay	Page 482
●	General data	Page 488
●	Introduction to analog measurement technology	Page 496
● ***dipos***	RTD/Pt100 / TC	Page 498
●	General data	Page 501
● ***cores***	Instrument amplifier for RTD/Pt100	Page 502
● **AKB**	Analog conversion module	Page 504
● **AKT**	Analog isolating module	Page 505
● **UET**	Isolating trip amplifier	Page 506
● **UET-P**	Isolating trip amplifier, isolated	Page 507
● **KSQ / *dipos*** KSQ	Constant voltage source	Page 508
●	General data	Page 510
●	Introduction to *wipos* switch mode power supply units	Page 516
● ***wipos***	Single phase/three phase switched mode	Page 518
● **WPS**	Power supply 24 V / 0,3–1 A	Page 524
● **NTU**	Universal power transformer	Page 525
● **BGL**	Rectifier module	Page 526
● **FSR**	Fixed voltage regular	Page 528
●	General data	Page 530
●	Introduction to *cemos*/thermal overload/system monitoring	Page 536
● ***cemos***	Electronic contactors	Page 537
● **TMS**	Thermistor overload relay	Page 539
● **LPB / SBS**	Lamp test module/fuse module	Page 540
● **SSM**	Centralised fault indication	Page 541
● **DNU / DSU**	Three phase system monitoring / fuse monitoring	Page 542
● **DRA**	Rotation indicator	Page 543
●	General data	Page 544
●	Introduction to SSW interface convertor	Page 552
● **SSW**	Interface converter	Page 553
●	General data	Page 555
●	Introduction to interface modules	Page 559
● **D-SUB**	D-SUB on screw terminal	Page 560
● **FLK**	IDC header on screw terminal	Page 561
● **S5**	Interface modules and I/O plug system for Siemens S5	Page 562
●	General data	Page 570
●	Introduction to empty housing systems	Page 578
● ***dipos***		Page 580
● **WEB**		Page 584
● **WEB 1001/1002**		Page 588
● **WEG**		Page 592
● **wieBOX**		Page 594
● Electronic empty housing		Page 596
●	General data	Page 600

Decentralised I/O Modules

ricos

Introduction to field bus systems
Field bus couplers
Digital I/O's
Function modules
Analogue I/O's
Compact module
General data

ricos offers

- Field bus couplers for all major field bus systems
- Freely configurable modules for digital/analogue systems
- Modular assembly of field bus nodes
- Spring-clamp terminal for secure and rapid connection
- Economy bus couplers
- Components can be replaced without disconnecting the wiring
- High degree of EMC resistance due to integrated earth connection to the mounting rail
- Compact housing dimensions
- Universal labelling

All Wieland Components which require CE general certification are CE certified, and identified with the CE logo.

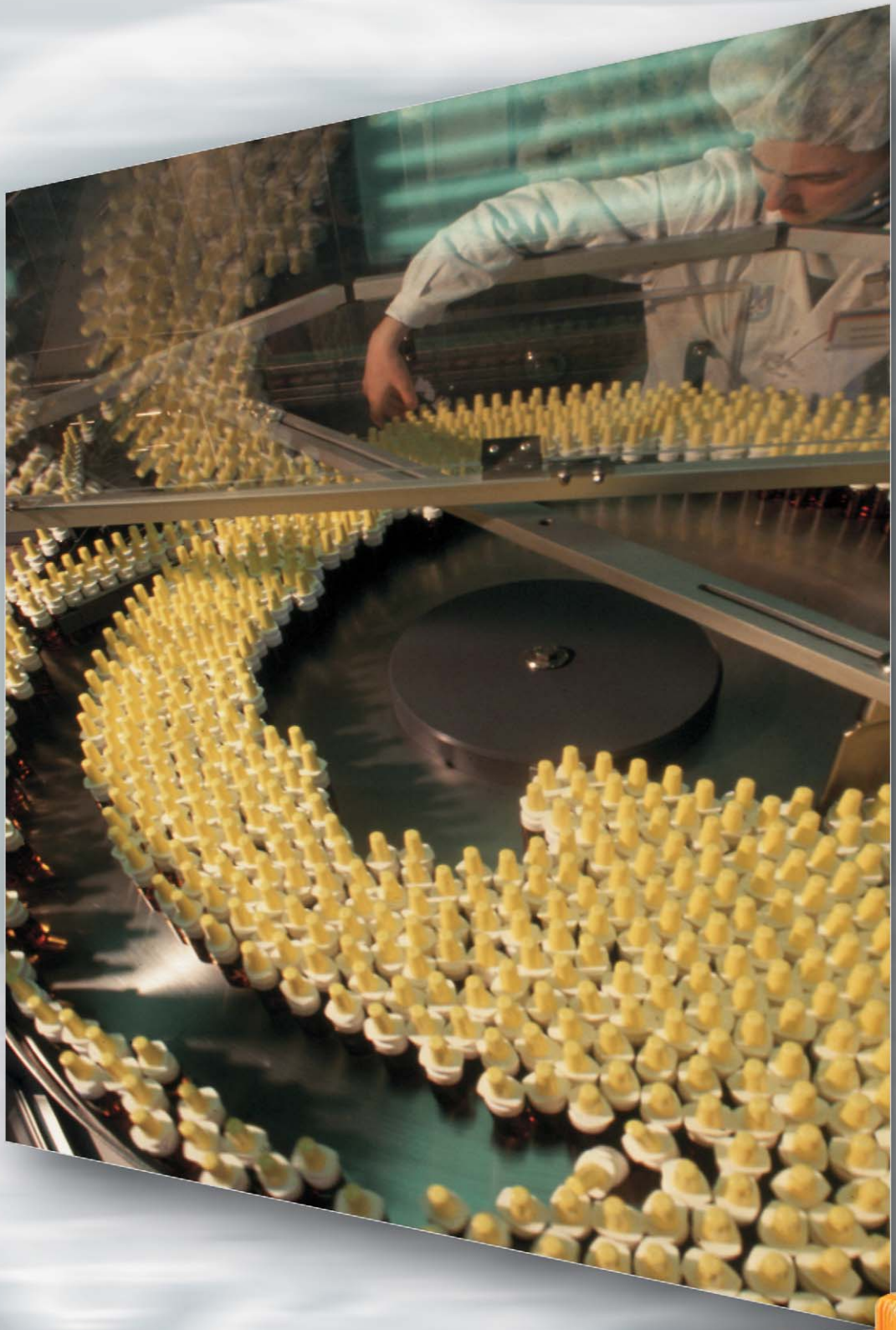

electronics

Electronic Components

Decentralised I/O module

Living with the variety and competition of the fieldbus systems

ricos

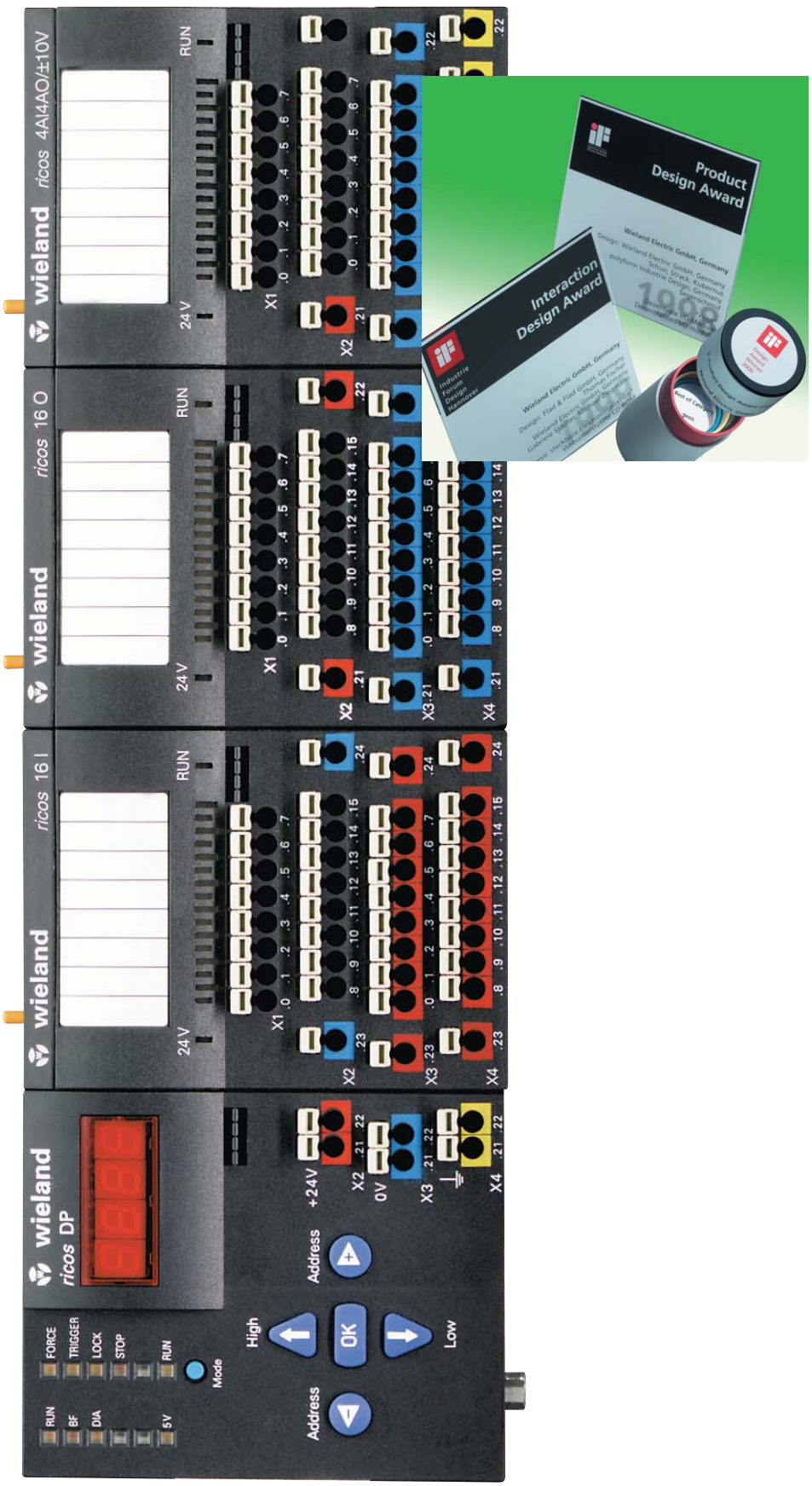

One of the remarkable features of a fieldbus system is its higher performance levels as compared to traditional wiring technology. A key advantage of fieldbus technology is that signal processing is possible in field devices, allowing intelligence to be distributed into the field.

A great number of functional and topological variations are available in today's market. This wide variety of hardware and protocols has formed due to the many different application requirements, company preferences, and the regulatory environment.

Wieland, as a globally active company, meets all fieldbus requirements and – with the ***ricos*** system – offers the user a universal system:

- ❒ Fieldbus couplers for all major fieldbus systems
- ❒ Freely configurable modules for binary and analog signals
- ❒ Modular-type combined fieldbus nodes
- ❒ The diagnosis tools integrated into the buscoupler provide start-up functions such as Force, Trigger and Lock without requiring further software
- ❒ Complete range of functionalities
- ❒ Spring cage clamp terminals for fast and safe connections
- ❒ Economy buscoupler to operate all functionalities
- ❒ Replacing function cards without disconnecting the wires
- ❒ High EMI resistance due to integrated diversion to the mounting rail
- ❒ Compact housing dimensions
- ❒ Consistent marking

ricos in use at Winkler+Dünnebier

Heathrow airport:
ricos insures proper luggage routing

Saving space and costs in paper manufacturing

Getting fit with ***ricos*** – fast and safe

A key feature of the ***ricos*** remote I/O system is its high level of reliability. This reliability level is the result of the quality of the electronic components used in the system, as well as the advanced techniques used during the manufacturing process. It is the combination of this reliability and resulting safety record which has convinced our customers to use the ***ricos*** system.

One such customer, Winkler+Dünnebier, manufactures special machinery for the production of envelopes and hygiene items. The company is the international market leader in these sectors. In paper manufacturing alone their marketshare is approximately two thirds of the global market. When developing their "hygiene" business division W+D were in unknown territory as most manufactures of this type product had traditionally built all of their own machinery. The way they were able to change this custom and gain their international leadership position was through the revolutionary way they built their machines.
W+D decided to produce the machines for their hygiene division using a modular concept. This design allowed for a high degree of flexibility and individual end product options.

During one machine development project, W+D was searching for a distributed connection of actuator and sensor technology via PROFIBUS.
Using this system they wanted to bring their modular concepts to cover not only the mechanical aspects, but also the control technology of their machines.
After comparing all available I/O systems, wieland's ***ricos*** system was chosen for use in the hygienes division.
For a manufacturer of special purpose machines the block design of the ***ricos*** modules is a better fit than the slice design. Since the exact number of inputs and outputs cannot be planned in advance it is necessary to plan on reserve channels. For this reason, ***ricos*** modules were of great interest, as its channels can be used both as inputs and outputs.
The decisive factor for choosing the ***ricos*** system was its clear and easy to use wiring system.

Technical information on bus systems

ricos

PROFIBUS DP (distributed I/Os), defined in DIN 19 245, part 3, and integrated in the European field bus standard EN 20 170, is a PROFIBUS variant with an optimized transmission rate to serve the needs of the object-oriented system sector and the sensor-actuator sector. It is designed to fit the requirements of the fast, efficient data exchange between the automation devices and the distributed devices such as binary or analog input/output modules and drives in timesensitive applications,

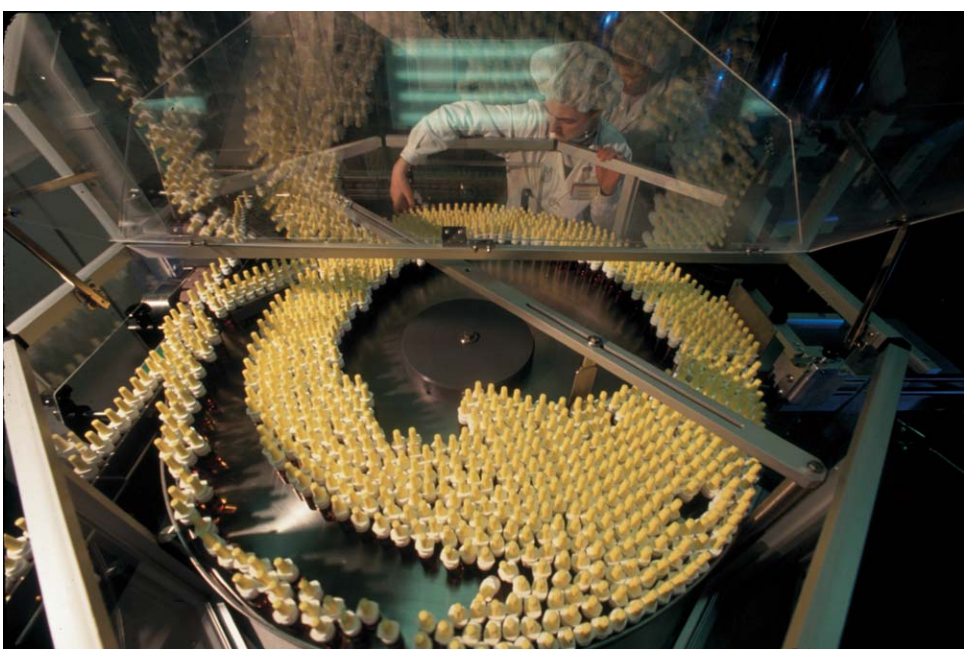

while the layer 7 service is not used. This shift of PROFIBUS DP into the field level enables cost savings in cabling. The field bus PROFIBUS DP is not new, but uses well-proven characteristics of the PROFIBUS transmission technology and the bus access protocol (DIN 19245, part 1 and 2). It is reduced vy certain functions in order to meet the high requirements of the system responsetime in the field of distributed I/O devices.

It is also possible to operate PROFIBUS FMS and PROFIBUS DP in one single cable. And there are especially interesting options when using so-called combination devices which use the characteristics of both variants.

The remarkable features of PROFIBUS DP are:

- ❒ Short response times
- ❒ High immunity
- ❒ Replaces the cost-intensive measured value transmission by a 0(4) to 20mA technology

Data transfer via distributed devices (slaves) is mainly done cyclically in the master-slave procedure. The central control system (master) reads the input information of the slaves and writes the output data to the slaves. PROFIBUS DP V1 also supports, among others the acyclic data interchange PROFIBUS DP operates with a transmission rate of up to 12 Mbits/s and enables the transmission of 1024 bit input/output data distributed among 32 nodes in less than 2 ms.

Characteristics:

- ❒ Line structure (with passive bus coupling)
- ❒ Max. length of 9.6 km in an electrical installation; up to 90 km in an optical one
- ❒ Area-covering networking by subdividing the system in 5 bus segments (via repeater) of up to 1.5 Mbit/s
- ❒ Number of the repeaters used and therefore the transmission distance depending on the baud rate
- ❒ Max. 124 nodes (throughout all bus segments), max. 32 nodes per segment
- ❒ Bus access in the token passing procedure; normal operation only with a master and polling request
- ❒ High transmission rate (real-time capability of PLCs is the major motive for DP)
- ❒ Data transmission via two-wire cable or optical fibre (active bus coupling)
- ❒ Electrical installation with screened, twisted-pair cable and RS485 interface
- ❒ Bit coding in NRZ code (non return to zero)
- ❒ I/O and field devices can be coupled and uncoupled during operation
- ❒ Extensive disgnostic options
- ❒ Open system (DIN E 19 245; EN 50 170)

The INTERBUS system was developed especially for machine system applications and fast processes.

This fieldbus system is therefore mainly used in automated manufacturing on system level, and as object-oriented fieldbus used to connect sensors and actuators. Standard PLC applications and industrial PC applications are possible with a minimum of costs and effort [Phoe97] [BaMü98].

The INTERBUS is set up from point-to-point connections as actively coupled ring. The bus nodes use separate lines each in both directions. This avoids a return from the last to the first node as usually required in ring-connected systems. The forward and return lines are both carried in one cable. This makes the INTERBUS resemble a public service bus in terms of installation, as only one cable is drawn from node to node. A complete bus system is thus implemented with different bus nodes, called interface module, bus coupler, bus network devices and local bus devices.

An interface module (master) operates as central unit for data communication in the bus network. The interface module also connects the INTERBUS system with the higher-level control system. The remote bus network can be set up with max. 512 stations and max. 400 m distance between 2 nodes with a data transmission rate of 500 kbit/s. The RS485 standard is used for data transmission on a two-wire line. The remote bus nodes are all equipped with a separate auxiliary power supply and function as repeaters due to their active couplings, thus enabling long distances. They are furthermore electrically isolated from the advancing INTERBUS segment. Remote bus nodes are both input/output devices and couplers of lower-level sub-rings. There are also mixed versions, the so-called I/O bus couplers.

As INTERBUS does not define any addresses for the nodes in the protocol, the max. number of bus nodes is determined by the master firmware. Implemented firmware allows up to 512 remote bus network nodes. In theory, a distance of 102 km is therefore possible for an INTERBUS system using copper wires. However, a max. system expansion of 13 km is currently guaranteed only. Longer distances can be achieved by using other transfer media such as fiber optic cables which currently allow total expansions of 100 km.

Characteristics:

- ❒ Ring-type structure with active node coupling
- ❒ Bus network with max. 512 nodes, max. distance of 400 m, max. total expansion of 13 km with copper cables, and 100 km with fiber optic cable
- ❒ Local bus with 8 nodes, max. distance of 1.5 m, max. total expansion of 10 m
- ❒ Node addressing according to their order assignment in the ring
- ❒ Transmission rate: Bus network with 500 kbit/s, local bus with 300 kbit/s
- ❒ Bus network using an interface based on RS485 two-wire technology
- ❒ Local bus using CMOS level, and 4 wire pairs for transmission
- ❒ Possible degree of protection up to IP 65
- ❒ High data security; several protection mechanisms (such as CRC)
- ❒ Open system (DIN E 19 258; EN 50 254)

CAN

In 1983 the automotive industry phrased their demand for a bus system to be used in motor vehicles. An electrical two-wire bus was to replace the extensive cable harnesses used to connect electrical systems. This was absolutely necessary, as the classical cable harnesses in motor vehicles had already reached lengths of more than 2 km and a weight over 100 kg. Requirements came up that could not be met by the bus systems available at that time.

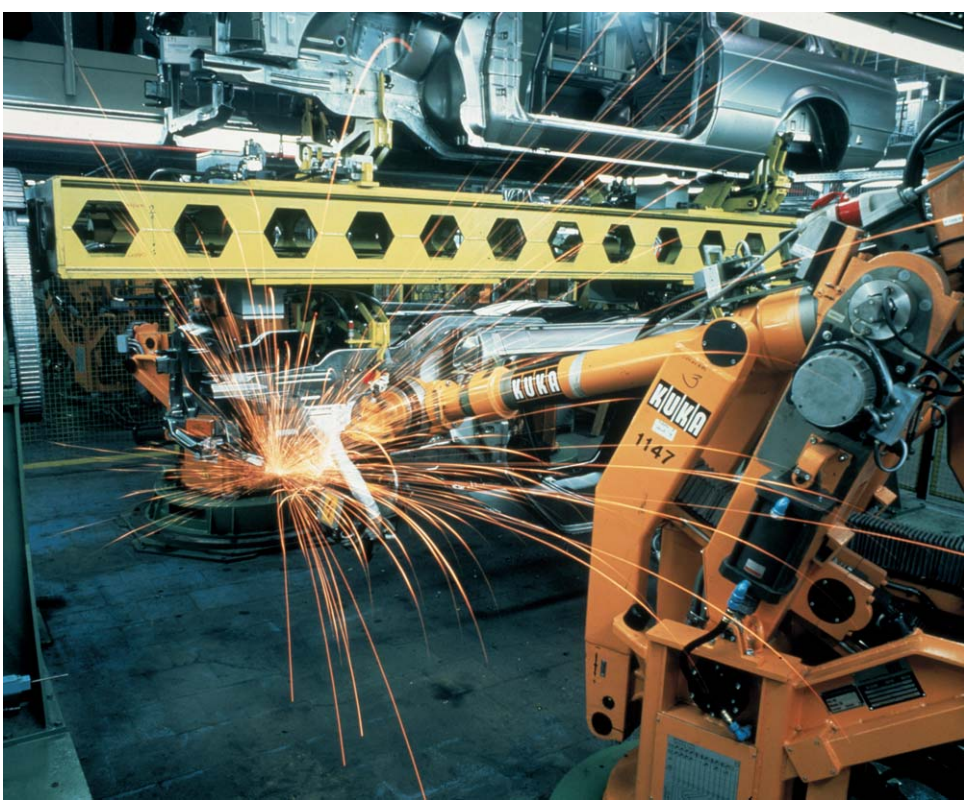

The major requirements:

- ❒ High protection against electromagnetic interference
- ❒ Real-time capability for fast procedures such as ignition and ABS
- ❒ High reliability
- ❒ Favorable price for large batch applications

In 1985 the solution in form of the Controller Area Network (CAN) was presented. CAN was developed in a cooperation between Robert Bosch GmbH and INTEL Semiconductor. In the meantime, CAN has gained a wide field of applications, not only in the motor vehicle technology, but also in the automation technology. Nowadays we find CAN in mobile systems, as machine-internal or system-internal communication system, in production automation, in the bottom field segment of process automation, even in building instrumentation and control, and in many other applications.

Since 1992 the user organization CiA (CAN in automation) has existed. More than 200 manufacturers and users of automation devices, sensors, actuators, software and services are participating in it [Trum95]. CAN is internationally standardized in ISO 11898 and is therefore an open bus system.

The reason for the widespread acceptance of CAN lies not only in the mentioned performance features, but especially also in the availability of very low-cost circuits due to the high quantities guaranteed in the automotive industry [Law2/97]. Characteristics:

- ❒ Line structure (with passive bus coupling)
- ❒ Number of nodes limited by the performance of the driver modules only
- ❒ Expansion depending on the transmission rate 40 m at 1 Mbit/s; 1000 m at 50 kbit/s
- ❒ Twisted-pair cables with terminating resistors and optical fibre
- ❒ Object-oriented messages, broadcasting and multicasting with acceptance check
- ❒ Multi-master network
- ❒ Bus access via bit-by-bit arbitration according to the CSMA/CA procedure; real-time capable for high-priority messages
- ❒ Max. transmission rate of 1 Mbit/s
- ❒ Very high data security (HD = 6); error detection and error signaling; automatic power-off of defect stations (node guarding)
- ❒ Different chips and micro-controllers support the protocol
- ❒ Open system (ISO 11898 and CiA DS 301)

Preferred areas of application

ricos

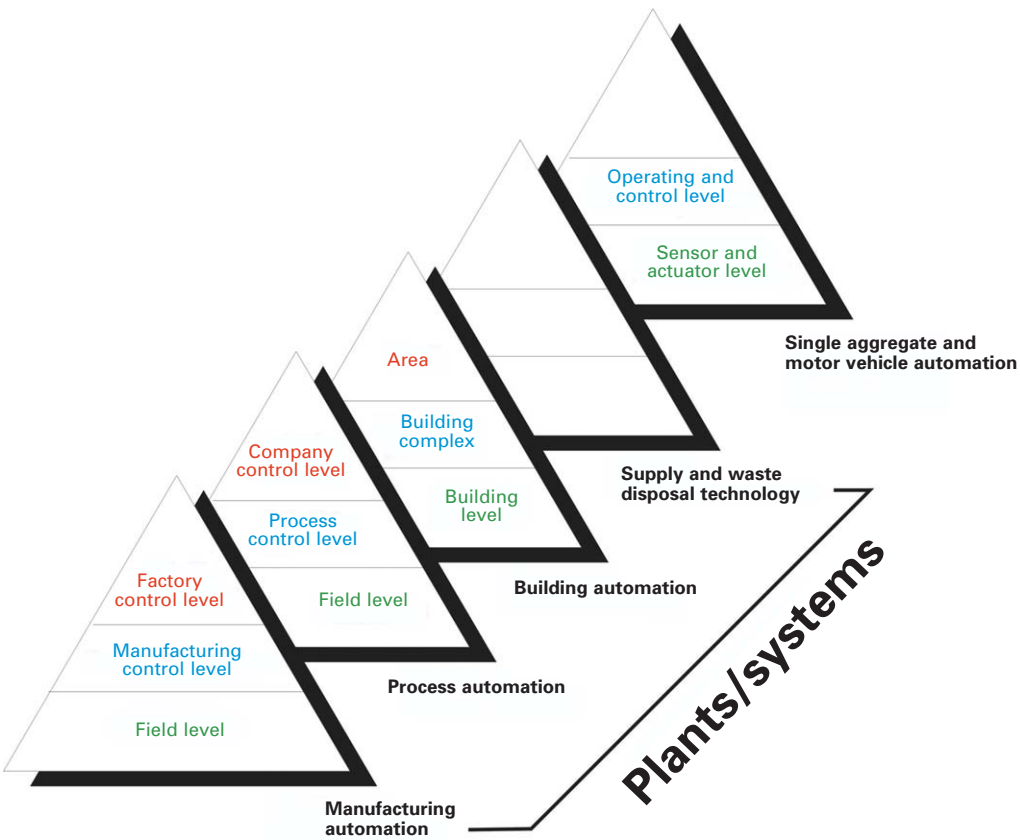

	Plant – (System) Automation					Stand-alone automation	
Communication levels	Production (solid goods)	Process (gas, fluid, steam...)	Building	Supply and waste disposal	Environment monitoring	Machines devices aggregates	vehicles, means of transport
WAN Wide Area Network	high-speed glass fibre (FDDI), Internet (www)						
LAN Local Area Network	Industry-Ethernet						
	MMS-Companion Standard: Robot, NC, PLC	MMS-Companion Standard: Process, Control					
FAN (Field bus)– system level	PROFIBUS (FMS) FP INTERBUS MODBUS FF (IEC NORM)	PROFIBUS (FMS) FP P-NET ARCNET FF (IEC NORM)	PROFIBUS (FMS) LON	PROFIBUS (FMS) DIN MESSBUS	PROFIBUS (FMS) DIN MESSBUS		
Object-oriented system level	PROFIBUS (DP) INTERBUS CAN SERCOS	PROFIBUS (DP) HART (BUS) BITBUS CAN	LON EIB CAN	DIN MESSBUS	DIN MESSBUS	PROFIBUS (DP) INTERBUS SERCOS	CAN P NET
Sensor/actuator– system level	AS-INTERFACE INTERBUS-LOOS	HART (PKT/PKT) PROFIBUS PA	EIB M-BUS Ebus	DIN MESSBUS M-BUS	DIN MESSBUS	AS-INTERFACE INTERBUS-LOOS M-BUS Ebus	

electronics

Operating and display functions

ricos

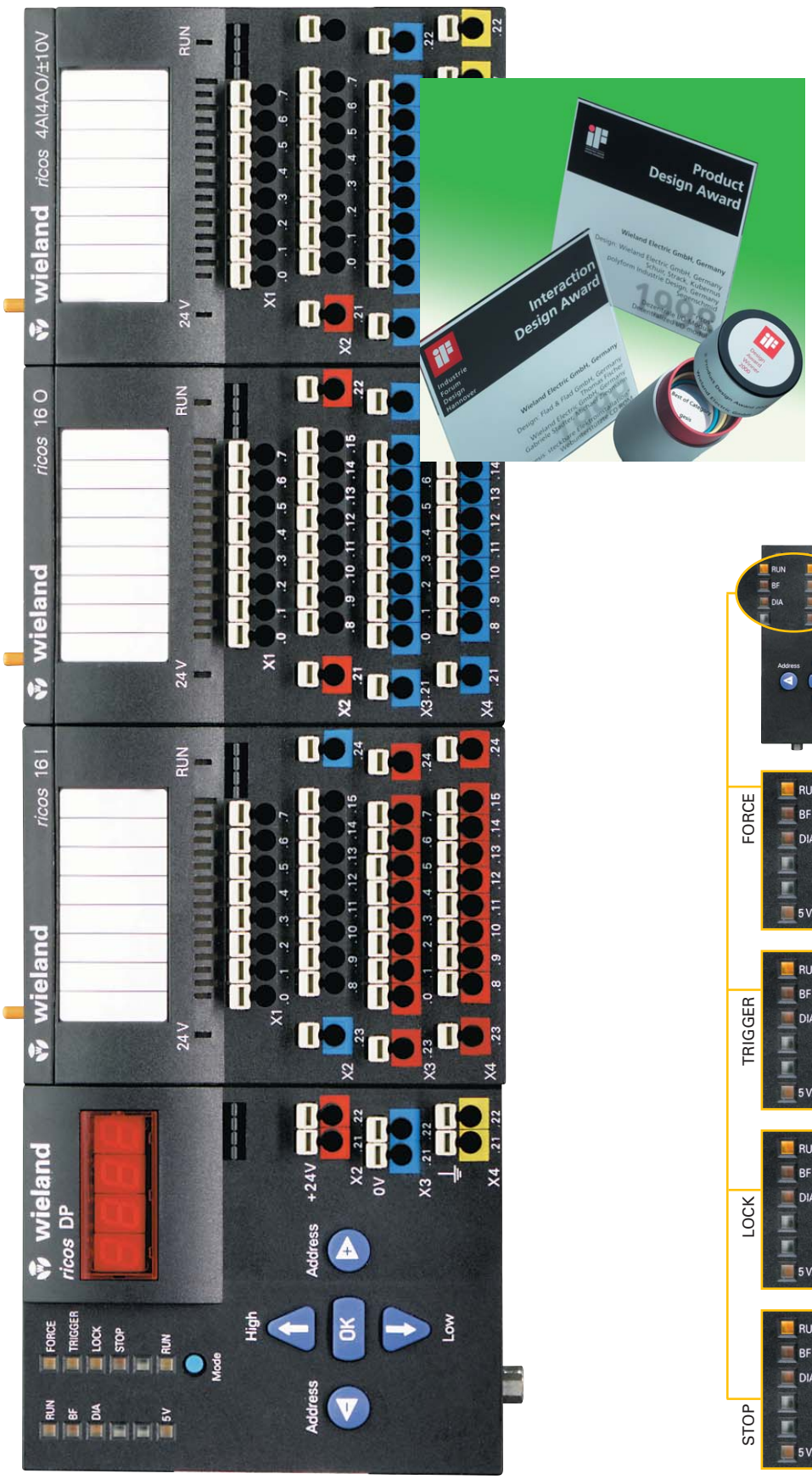

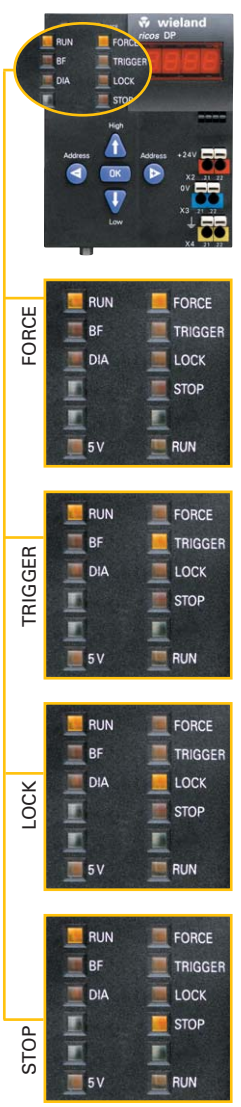

With or without a fieldbus being connected (offline), binary and analog I/O channels can be operated manually.
➜ in the FORCE mode

The last 20 process images of the node can be recorded and displayed
➜ in the TRIGGER mode

Analog and binary I/O channels can be freely chosen and "frozen" to a defined switching status in order to simulate certain elements of the system.
➜ in the LOCK mode

The outputs are switched off and the inputs are faded out.
➜ STOP mode.

Economy buscoupler compact modules

ricos

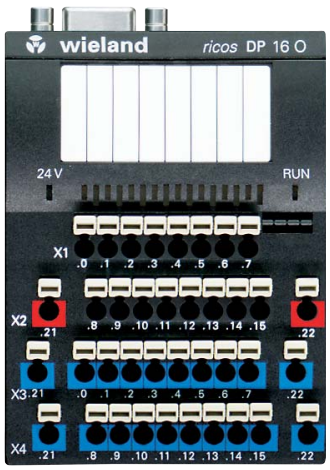

Would you like to ...

- ❒ ...use more than one fieldbus?
- ❒ ...reduce your start-up times?
- ❒ ...simulate signals offline – on site without programming unit?
- ❒ ...set I/Os without PLC?
- ❒ ...read analog values on site?

- ❒ Start-up without field bus connection
- ❒ Troubleshooting on site
- ❒ Displaying signal states of all inputs and outputs for binary and analog values

...then use the ***ricos*** bus coupler with operating and display functionality!

The ***ricos*** buscoupler provides you with:

- ❒ Connection to the most common fieldbus systems such as PROFIBUS DP, Interbus, CANopen and DeviceNet
- ❒ Modules for fast mounting to DIN rails or panel mount
- ❒ Wiring with spring connectors
- ❒ Supplied with open clamping body
- ❒ Module wiring at the front
- ❒ Pluggable potential distributors on the module
- ❒ Compact module dimensions
- ❒ Up to 8 modules can be connected to a bus coupler in line, enabling up to 128 I/O signals per bus node
- ❒ Electronics can be replaced without disconnecting the wiring

If you do not require the operating and display functionality of the standard ***ricos*** buscoupler ...

...then we recommend our ***ricos*** economy buscoupler.

If your control requirements are more complex ...

...then we can offer you our ***ricos*** compact modules.

ricos compact modules

- ❒ 4 compact module types each used for digital signal sensing in the fieldbus systems:
- ❒ PROFIBUS DP
  - ❒ Interbus
  - ❒ CANopen
  - ❒ DeviceNet
- ❒ All modules are slaves with buscoupler functionality
- ❒ Efficient and space-saving extension for only a few I/Os

Distributed I/O Modules
Buscoupler

ricos

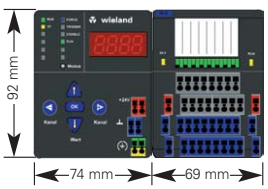

Depth: 51 mm
(incl. mounting rail TS 35/7.5 mm)

Dimensions (mm): W x H x D
74 x 92 x 51

Modular buscoupler PROFIBUS DP

CE; Approvals: cULus, Profibus certification

Modular bus coupler Interbus

CE; Approvals: cULus, Interbus certification

Description	Type	Part no.	Std. pack	Type	Part no.	Std. pack
Buscoupler with diagnosis function	BC DP	83.030.0000.1	1	BC S	83.031.0000.1	1
	Mode display:			Mode display:		
	FORCE mode: LED yellow			FORCE mode: LED yellow		
	TRIGGER mode: LED yellow			TRIGGER mode: LED yellow		
	LOCK mode: LED yellow			LOCK mode: LED yellow		
	STOP mode: LED yellow			STOP mode: LED yellow		
	RUN mode: LED green			RUN mode: LED green		
Wiring diagrams, derating curves	**see page 430**			**see page 430**		
System data						
Max. number of nodes	126			256		
Transmission medium	screened copper cable 2 x 0.25 mm²/AWG 23			screened copper cable 5 x 0.25 mm²/AWG 23		
Max. network expansion	100 m–1200 m (depending on baud rate/cable)			400 m (remote bus)		
Baud rate	9.6 kBaud...12 Mbaud			500 kBaud		
Internal bus refresh	2 ms			2 ms		
Bus connection	1 x D-SUB 9, screened female connector			2 x D-SUB 9, screened female and male connectors		
Technical information						
Max. number of I/O bytes	64 E-Byte/64 A-Byte			64 E-Byte/64 A-Byte		
Number of I/O modules per node	8			8		
Number of digital I/O points per node	128			128		
Number of analog I/O points per node	32			32		
Address setting	3...126 (via keyboard)			automatically as per system		
Stet	PC or PLC			PC or PLC		
Operating voltage	24 V DC, ±20 %, max. 5 % residual ripple			24 V DC, ±20 %, max. 5 % residual ripple		
Current input	< 125 mA (at 24 V and without I/O modules)			< 125 mA (at 24 V and without I/O modules)		
	< 500 mA (at 24 V with I/O modules)			< 500 mA (at 24 V with I/O modules)		
Insulation voltage	350 V AC, 50 Hz (system / supply)			350 V AC, 50 Hz (system / supply)		
Creepage distances and clearances	DIN EN 61131-2; DIN EN 50178			DIN EN 61131-2; DIN EN 50178		
Electrostatic discharge	EN 61000-4-2; 8 KV air; 4 KV contact			EN 61000-4-2; 8 KV air; 4 KV contact		
Electromagnetic fields	ENV 50140; 10 V/m; 30...1000 MHz			ENV 50140; 10 V/m; 30...1000 MHz		
Immunity / emitted interference	EN 61000-6-2/EN 55011, limit value class A, group 1			EN 61000-6-2/EN 55011, limit value class A, group 1		
Burst	2 kV accord. to DIN EN 61000-4-4			2 kV accord. to DIN EN 61000-4-4		
Connection style	spring connection			spring connection		
Cross-sectional area- fine stranded / solid	26 –14 AWG / 26 –16 AWG			26 –14 AWG / 26 –16 AWG		
Ambient temperature	0 °C...+55 °C (accord. to DIN 40040)			0 °C...+55 °C (accord. to DIN 40040)		
Storage temperature	–25 °C...+75 °C (accord. to DIN 40040)			–25 °C...+75 °C (accord. to DIN 40040)		
Bus-specific status display	RUN	LED green	RUN	RUN	LED green	RUN
	bus error	LED red	BF	remote bus disabled	LED red	RD
	diagnosis	LED red	DIA	remote bus connected	LED green	RC
	operating voltage	LED green	5 V	bus access	LED green	BA
				operating voltage	LED green	5 V
Accessories						
Bus connector, vertical	83.030.0010.0 (node)			83.031.0010.0 (input line)		
Bus connector, vertical	83.030.0011.0 (termination)			83.031.0010.0 (output line)		
Bus connector, horizontal (pending)	83.030.0012.0 (switch)					
Manual, German	05.591.3389.0			05.591.3389.0		
Manual, English	05.562.1389.0			05.562.1389.0		
GSD file and Word template for labels	05.591.3255.0			05.591.3255.0		
Marking tag, 8-digit, unmarked	04.242.1553.0			04.242.1553.0		
Marking tag, 8-digit, marked (upon request)						
End clamp for DIN rail	Z5.522.8553.0			Z5.522.8553.0		

Specifications are subject to change without notice

ricos

Dimensions (mm): W x H x D
74 x 92 x 51

Modular buscoupler DeviceNet

CE; Approvals: cULus

Modular buscoupler CANopen

CE; Approvals: cULus in preparation

Description	Type	Part no.	Std. pack	Type	Part no.	Std. pack
Buscoupler with diagnosis function	BC-DEVICENET	83.032.0000.1	1	BC-CANOPEN	83.033.0000.1	1
Mode display:	incl. 1 busconnector			incl. 1 busconnector		
	FORCE mode: LED yellow			FORCE mode: LED yellow		
	TRIGGER mode: LED yellow			TRIGGER mode: LED yellow		
	LOCK mode: LED yellow			LOCK mode: LED yellow		
	STOP mode: LED yellow			STOP mode: LED yellow		
	RUN mode: LED green			RUN mode: LED green		
Wiring diagrams, derating curves	**see page 430**			**see page 430**		
System data						
Max. number of nodes	64 with repeater			256		
Transmission medium	screened copper cable trunk line AWG 15, 18			screened copper cable 3 x 0.25 mm²/AWG 23		
	screened copper cable drop line AWG 22, 24					
Max. network expansion	100 m–500 m (depending on baud rate / cable)			100 m–500 m (depending on baud rate / cable)		
Baud rate	125/250/500 kBaud (setting via keyboard)			10 kBaud...1 MBaud (setting via keyboard)		
Internal bus refresh	2 ms			2 ms		
Bus connection	5pole connector, screw			5pole connector, screw		
Technical information						
Max. number of I/O bytes	64 E-Byte/64 A-Byte			9 R-PDOs; 9 T-PDOs		
Number of I/O modules per node	8			6		
Number of digital I/O points per node	128			96		
Number of analog I/O points per node	32			24		
Address setting (MAC ID)	1...63 (via keyboard)			1...126 (via keyboard)		
Stet	PC or PLC			PC or PLC		
Operating voltage	24 V DC, ±20 %, max. 5 % residual ripple			24 V DC, ±20 %, max. 5 % residual ripple		
Current input	< 125 mA (at 24 V and without I/O modules)			< 125 mA (at 24 V and without I/O modules)		
	< 500 mA (at 24 V with I/O modules)			< 500 mA (at 24 V with I/O modules)		
Insulation voltage	350 V AC, 50 Hz (system/supply)			350 V AC, 50 Hz (system / supply)		
Creepage distances and clearances	DIN EN 61131-2; DIN EN 50178			DIN EN 61131-2; DIN EN 50178		
Electrostatic discharge	EN 61000-4-2; 8 KV air; 4 KV contact			EN 61000-4-2; 8 KV air; 4 KV contact		
Electromagnetic fields	ENV 50140; 10 V/m; 30...1000 MHz			ENV 50140; 10 V/m; 30...1000 MHz		
Immunity / emitted interference	EN 61000-6-2/EN 55011, limit value class A, group 1			EN 61000-6-2/EN 55011, limit value class A, group 1		
Burst	2 kV accord. to DIN EN 61000-4-4			2 kV accord. to DIN EN 61000-4-4		
Connection style	spring connection			spring connection		
Cross-sectional area-fine stranded / solid	26 – 14 AWG / 26 – 16 AWG			26 – 14 AWG / 26 – 16 AWG		
Ambient temperature	0 °C...+55 °C (accord. to DIN 40040)			0 °C...+55 °C (accord. to DIN 40040)		
Storage temperature	–25 °C...+75 °C (accord. to DIN 40040)			–25 °C...+75 °C (accord. to DIN 40040)		
Bus-specific status display	RUN	LED green	RUN	RUN	LED green	RUN
	status to master	LED green/red	NET	network status	LED green/red	NET
	ready for operation	LED green/red	MOD	module status	LED green/red	MOD
	operating voltage	LED green	5 V	operating voltage	LED green	5 V
Accessories						
Bus connector	25.323.3501.0			25.323.3501.0		
Manual, German	05.591.3389.0			05.591.3389.0		
Manual, English	05.562.1389.0			05.562.1389.0		
EDS file and Word template for labels	05.591.3255.0			05.591.3255.0		
Marking tag, 8-digit, unmarked	04.242.1553.0			04.242.1553.0		
Marking tag, 8-digit, marked (upon request)						
End clamp for DIN rail	Z5.522.8553.0			Z5.522.8553.0		

Ethernet Buscoupler Module

ricos

Modular Buscoupler Ethernet TCP/IP

CE; Approvals: CE, cUL_{us} pending

Dimensions (mm): W x H x D 74 x 92 x 51
(incl. mounting rail TS 35; DIN EN 60715)

Description	Type	Part no.	Std. pack	Type	Part no.	Std. pack
Buscoupler with diagnostic features	BC-Ethernet	83.034.0000.1	1			
Mode display:						
	FORCE mode: LED yellow					
	TRIGGER mode: LED yellow					
	LOCK mode: LED yellow					
	STOP mode: LED yellow					
	RUN mode: LED green					
System Data						
Max. number of nodes	limited by Ethernet specifications					
Transmission medium	CAT5 twisted pair 10/100 base T					
Protocols	MODBUS/TCP. HTTP, Boot-P					
Baud rate	10/100 Mbit/Autodetection					
Internal Bus Refresh	2 ms					
Bus connection	RJ 45					
Technical Information						
Max. number of I/O Bytes	64 E-Byte/64 A-Byte					
Max. number of I/O modules per node	8					
Max. number of digital I/O points per node	128					
Max. number of analog I/O points per node	32					
Address setting	keypad & Boot P					
Configuration	PC/PLC					
Power Input	24 V DC ±20%, max 5% residual ripple					
Power Consumption	<3.5 W (without I/O module)					
Isolation voltage	350 V AC, 50 Hz (system/supply)					
Creepage distances and clearances	DIN EN 61131-2; DIN EN 50178					
Electrostatic discharge	EN 61000-4-2; 8 KV air; KV contact					
Electromagnetic fields	ENV 50140; 10 V/m; 30 … 1000 MHz					
Immunity/emittedinterference	EN 50082-2/EN 55011, limit value class A, group 1					
Burst	2 kV accord. to DIN EN 61000-4-4					
Connection Style	spring connection					
Cross-section area fine stranded/solid	0.14 – 1.5 mm^2 / 26-14 AWG / 0,5 – 2,5 mm^2 / 26-16 AWG					
Ambient temperature	0° C ... +55° C					
Storage temperature	-25° C ... +70° C					
Bus-specific status display	RUN	LED yellow	RUN			
	Operating voltage	LED green	TxD/RxD			
	Net Available	LED green	LINK			
	Operating voltage	LED yellow	5 V			
	Fieldbus not initiated	LED red	INIT			
Accessories						
Bus connector, vertical						
Bus connector, vertical						
Bus connector, horizontal (pending)						
Manual, German		05.591.3389.0				
Manual, English		05.562.1389.0				
GSD file and Word template for labels		05.591.3255.0				
Marking tag, 8-digit, unmarked		04.242.1553.0				
Marking tag, 8-digit, marked (upon request)						
End Clamp for DIN rail		Z5.522.8553.0				

Specifications are subject to change without notice

ricos

electronics

Distributed I/O Modules
Buscoupler

ricos

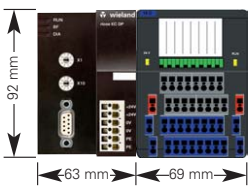

Depth: 51 mm
(incl. mounting rail TS 35/7.5 mm)

Dimensions (mm): W x H x D
63 x 92 x 51

Modular economy buscoupler PROFIBUS DP

CE; Approvals: cULus, Profibus certification in preparation

Modular economy buscoupler Interbus

CE; Approvals: cULus, Interbus certification in preparation

Description	Type	Part no.	Std. pack	Type	Part no.	Std. pack
Economy buscoupler	EC DP	83.030.0001.1	1	EC S	83.031.0001.1	1
Mode display	RUN – processor operating LED yellow			RUN – processor operating LED yellow		
	BF – no bus connected (bus fail): LED red			RD - remote bus disabled LED red		
	DIA – diagnosis message sent off: LED red			RC - remote bus connected LED green		
				BA – bus access LED green		
Wiring diagrams, derating curves	**see page 430**			**see page 430**		
System data						
Max. number of nodes	126			256		
Transmission medium	screened copper cable 2 x 0.25 mm²/AWG 23			screened copper cable 5 x 0.25 mm²/AWG 23		
Max. network expansion	100 m – 1200 m (depending on baud rate / cable)			400 m (remote bus)		
Baud rate	9.6 kBaud...12 Mbaud			500 kBaud		
Internal bus refresh	2 ms			2 ms		
Bus connection	1 x D-SUB 9, screened female connector			2 x D-SUB 9, screened female and male connectors		
Technical information						
Max. number of I/O bytes	64 E-Byte/64 A-Byte			64 E-Byte/64 A-Byte		
Number of I/O modules per node	8			8		
Number of digital I/O points per node	128			128		
Number of analog I/O points per node	32			32		
Address setting	3...126 (switch)			automatically as per system		
Stet	PC or PLC			PC or PLC		
Operating voltage	24 V DC, ±20 %, max. 5 % residual ripple			24 V DC, ±20 %, max. 5 % residual ripple		
Current input	< 125 mA (at 24 V and without I/O modules)			< 125 mA (at 24 V and without I/O modules)		
	< 500 mA (at 24 V with I/O modules)			< 500 mA (at 24 V with I/O modules)		
Insulation voltage	350 V AC, 50 Hz (system / supply)			350 V AC, 50 Hz (system / supply)		
Creepage distances and clearances	DIN EN 61131-2; DIN EN 50178			DIN EN 61131-2; DIN EN 50178		
Electrostatic discharge	EN 61000-4-2; 8 KV air; 4 KV contact			EN 61000-4-2; 8 KV air; 4 KV contact		
Electromagnetic fields	ENV 50140; 10 V/m; 30...1000 MHz			ENV 50140; 10 V/m; 30...1000 MHz		
Immunity / emitted interference	EN 61000-6-2/EN 55011, limit value class A, group 1			EN 61000-6-2/EN 55011, limit value class A, group 1		
Burst	2 kV accord. to DIN EN 61000-4-4			2 kV accord. to DIN EN 61000-4-4		
Connection style	spring connection			spring connection		
Cross-sectional area-fine stranded / solid	26 – 14 AWG / 26 – 16 AWG			26 – 14 AWG / 26 – 16 AWG		
Ambient temperature	0 °C...+55 °C (accord. to DIN 40040)			0 °C...+55 °C (accord. to DIN 40040)		
Storage temperature	–25 °C...+75 °C (accord. to DIN 40040)			–25 °C...+75 °C (accord. to DIN 40040)		
Accessories						
Bus connector, vertical	83.030.0010.0 (node)			83.031.0010.0 (input line)		
Bus connector, vertical	83.030.0011.0 (termination)			83.031.0010.0 (output line)		
Bus connector, horizontal (pending)	83.030.0012.0 (switch)					
Manual, German	05.591.3389.0			05.591.3389.0		
Manual, English	05.562.1389.0			05.562.1389.0		
GSD file and Word template for labels	05.591.3255.0			05.591.3255.0		
Marking tag, 8-digit, unmarked	04.242.1553.0			04.242.1553.0		
Marking tag, 8-digit, marked (upon request)						
End clamp for DIN rail	Z5.522.8553.0			Z5.522.8553.0		

Specifications are subject to change without notice

ricos

Dimensions (mm): W x H x D
63 x 92 x 51

Modular economy buscoupler DeviceNet

CE; Approvals: cULus in preparation

Modular economy buscoupler CANopen

CE; Approvals: cULus in preparation

Description	Type	Part no.	Std. pack	Type	Part no.	Std. pack
Buscoupler with diagnosis function	EC-DEVICENET	83.032.0001.1	1	EC-CANOPEN	83.033.0001.1	1
	incl. 1 busconnector			incl. 1 busconnector		
Mode display:	RUN – processor operating LED yellow			RUN – processor operating LED yellow		
	NET - status display to master LED green/red			NET - status display to master LED green/red		
	MOD – ready for operation LED green/red			MOD – ready for operation LED green/red		
Wiring diagrams, derating curves	**see page 430**			**see page 430**		
System data						
Max. number of nodes	64 with repeater			256		
Transmission medium	screened copper cable trunk line AWG 15, 18			screened copper cable 3 x 0.25 mm²/AWG 23		
	screened copper cable drop line AWG 22, 24					
Max. network expansion	100 m–500 m (depending on baud rate / cable)			100 m–500 m (depending on baud rate / cable)		
Baud rate	125/250/500 kBaud (DIP switch)			10 kBaud...1 MBaud (DIP switch)		
Internal bus refresh	2 ms			2 ms		
Bus connection	5pole connector, screw			5pole connector, screw		
Technical information						
Max. number of I/O bytes	64 E-Byte/64 A-Byte			9 R-PDOs; 9 T-PDOs		
Number of I/O modules per node	8			6		
Number of digital I/O points per node	128			96		
Number of analog I/O points per node	32			24		
Address setting (MAC ID)	1...63 (via keyboard)			1...126 (via keyboard)		
Stet	PC or PLC			PC or PLC		
Operating voltage	24 V DC, ±20 %, max. 5 % residual ripple			24 V DC, ±20 %, max. 5 % residual ripple		
Current input	< 125 mA (at 24 V and without I/O modules)			< 125 mA (at 24 V and without I/O modules)		
	< 500 mA (at 24 V with I/O modules)			< 500 mA (at 24 V with I/O modules)		
Insulation voltage	350 V AC, 50 Hz (system / supply)			350 V AC, 50 Hz (system / supply)		
Creepage distances and clearances	DIN EN 61131-2; DIN EN 50178			DIN EN 61131-2; DIN EN 50178		
Electrostatic discharge	EN 61000-4-2; 8 KV air; 4 KV contact			EN 61000-4-2; 8 KV air; 4 KV contact		
Electromagnetic fields	ENV 50140; 10 V/m; 30...1000 MHz			ENV 50140; 10 V/m; 30...1000 MHz		
Immunity / emitted interference	EN 61000-6-2/EN 55011, limit value class A, group 1			EN 61000-6-2/EN 55011, limit value class A, group 1		
Burst	2 kV accord. to DIN EN 61000-4-4			2 kV accord. to DIN EN 61000-4-4		
Connection style	spring connection			spring connection		
Cross-sectional area-fine stranded / solid	26 – 14 AWG / 26 – 16 AWG			26 – 14 AWG / 26 – 16 AWG		
Ambient temperature	0 °C...+55 °C (accord. to DIN 40040)			0 °C...+55 °C (accord. to DIN 40040)		
Storage temperature	–25 °C...+75 °C (accord. to DIN 40040)			–25 °C...+75 °C (accord. to DIN 40040)		
Accessories						
Bus connector	25.323.3501.0			25.323.3501.0		
Manual, German	05.591.3389.0			05.591.3389.0		
Manual, English	05.562.1389.0			05.562.1389.0		
EDS file and Word template for labels	05.591.3255.0			05.591.3255.0		
Marking tag, 8-digit, unmarked	04.242.1553.0			04.242.1553.0		
Marking tag, 8-digit, marked (upon request)						
End clamp for DIN rail	Z5.522.8553.0			Z5.522.8553.0		

Distributed I/O Modules

ricos

Binary I/O modules

Configurable as input or output,
for 2-wire, 3-wire and 4-wire connections
Electronic components can be replaced
without disconnecting the wiring

Dimensions (mm): W x H x D
69 x 92 x 51

Binary I/O module 24 V DC 8 inputs or 8 outputs

CE; Approvals: c UL us

Binary I/O module 24 V DC 16 inputs

CE; Approvals: c UL us

Description	Type	Part no.	Std. pack	Type	Part no.	Std. pack
	ricos 8I/O	83.035.3100.1	1	ricos 16I	83.035.3000.1	1
Mode display:						
	24 V – supply voltage connected: LED yellow			24 V – supply voltage connected: LED yellow		
	RUN – internal data transmission in progress: LED yellow			RUN – internal data transmission in progress: LED yellow		
	channel LED – switching status: LED green			channel LED – switching status: LED green		
	channel LED – channel cursor: LED yellow			channel LED – channel cursor: LED yellow		
Wiring diagrams, derating curves	**see pages 431 – 434**			**see pages 431 – 434**		
Module data						
Number of inputs	max. 8			16		
Number of outputs	max. 8			0		
Operating voltage	24 V DC, ±20 %, max. 5 % residual ripple			24 V DC, ±20 %, max. 5 % residual ripple		
Power input	< 0.5 W			< 0.5 W		
Stet	not required			not required		
Required space on control side	1 input byte/1output byte			2 input byte		
Input data						
Switching level "0" (EN 61131-2)	–30 V...+5 V DC			–30 V...+5 V DC		
Switching level "1" (EN 61131-2)	+15 V...+30 V DC			+15 V...+30 V DC		
Input current/channel (at 24 V DC)	6.1 mA			4.5 mA		
Status display	LED green			LED green		
Output data						
Output voltage	operating voltage – 0.5 V DC					
Output current per channel	1000 mA DC					
Max. total current per module	8 A DC					
Simultaneity	100 %					
Load types	resistive, inductive					
Status display	LED green					
Output response	resistant to overload and short-circuit					
General						
Signal delay per I/O channel	< 100 µs			< 100 µs		
Max. voltage power contacts	30 V DC			30 V DC		
Max. current power contacts	8 A DC			8 A DC		
Insulation voltage	350 V AC, 50 Hz (system/supply)			350 V AC, 50 Hz (system/supply)		
Creepage distances and clearances	DIN EN 61131-2; DIN EN 50178			DIN EN 61131-2; DIN EN 50178		
Electrostatic discharge	EN 61000-4-2; 8 KV air; 4 KV contact			EN 61000-4-2; 8 KV air; 4 KV contact		
Electromagnetic fields	ENV 50140; 10 V/m; 30...1000 MHz			ENV 50140; 10 V/m; 30...1000 MHz		
Immunity / emitted interference	EN 61000-6-2/EN 55011, limit value class A, group 1			EN 61000-6-2/EN 55011, limit value class A, group 1		
Burst	accord. to EN 61000-4-4			accord. to EN 61000-4-4		
Connection style	spring connection			spring connection		
Cross-sectional area-fine stranded / solid	26 – 14 AWG / 26 – 16 AWG			26 – 14 AWG / 26 – 16 AWG		
Ambient temperature	0 °C...+55 °C (accord. to DIN 40040)			0 °C...+55 °C (accord. to DIN 40040)		
Storage temperature	–25 °C...+75 °C (accord. to DIN 40040)			–25 °C...+75 °C (accord. to DIN 40040)		
Accessories						
Snap-on potential distributor for 3-wire and 4-wire operation	83.039.0000.1			83.039.0000.1		
Adhesive labels, DIN A4 sheet	05.591.3255.0			05.591.3255.0		
2pole jumper for parallel output switching	Z7.258.1225.0			Z7.258.1225.0		
Marking tag, 8-digit, unmarked	04.242.1553.0			04.242.1553.0		
Marking tag, 8-digit, marked (upon request)						
End clamp for DIN rail	Z5.522.8553.0			Z5.522.8553.0		
Manual, English	05.562.1389.0			05.562.1389.0		

Specifications are subject to change without notice

ricos

Dimensions (mm): W x H x D
69 x 92 x 51

Binary I/O module 115 V AC 4 inputs

CE; Approvals: cULus in preparation

Binary I/O module 230 V AC 4 inputs

CE; Approvals: cULus in preparation

Description	Type	Part no.	Std. pack	Type	Part no.	Std. pack
	ricos 4I 115 V	83.035.5000.1	1	ricos 4I 230 V	83.035.5005.1	1
Mode display:						
	24 V – supply voltage connected: LED yellow			24 V – supply voltage connected: LED yellow		
	RUN – internal data transmission in progress: LED yellow			RUN – internal data transmission in progress: LED yellow		
	channel LED – switching status: LED green			Channel LED – switching status: LED green		
	channel LED – channel cursor: LED yellow			Channel LED – channel cursor: LED yellow		
Wiring diagrams, derating curves	**see pages 431 – 434**			**see pages 431 – 434**		
Module data						
Number of inputs	4			4		
Number of outputs	0			0		
Operating voltage	115 V AC, ± 10 %			230 V AC, ± 10 %		
Power input	< 0.5 W			< 0.5 W		
Stet	not required			not required		
Required space on control side	1 input byte			1 input byte		
Input data						
Switching level "0" (EN 61131-2)	0 V...20 V AC			0 V...40 V AC		
Switching level "1" (EN 61131-2)	79 V...130 V AC			164 V...250 V AC		
Input current / channel (at 24 V DC)	typically 5 mA			typically 5 mA		
Status display	LED green			LED green		
Output data:						
Output voltage						
Output current per channel						
Max. total current per module						
Simultaneity						
Load types						
Status display						
Output response						
General						
Signal delay per I/O channel	max. 10 ms			max. 10 ms		
Max. voltage power contacts	250 V AC			250 V AC		
Max. current power contacts	8 A AC			8 A AC		
Insulation voltage	350 V AC, 50 Hz (system / supply)			350 V AC, 50 Hz (system / supply)		
Creepage distances and clearances	DIN EN 61131-2; DIN EN 50178			DIN EN 61131-2; DIN EN 50178		
Electrostatic discharge	EN 61000-4-2; 8 KV air; 4 KV contact			EN 61000-4-2; 8 KV air; 4 KV contact		
Electromagnetic fields	ENV 50140; 10 V/m; 30...1000 MHz			ENV 50140; 10 V/m; 30...1000 MHz		
Immunity / emitted interference	EN 61000-6-2/EN 55011, limit value class A, group 1			EN 61000-6-2/EN 55011, limit value class A, group 1		
Burst	accord. to EN 61000-4-4			accord. to EN 61000-4-4		
Connection style	spring connection			spring connection		
Cross-sectional area-fine stranded / solid	26 – 14 AWG / 26 – 16 AWG			26 – 14 AWG / 26 – 16 AWG		
Ambient temperature	0 °C...+ 55 °C (accord. to DIN 40040)			0 °C...+ 55 °C (accord. to DIN 40040)		
Storage temperature	–25 °C...+ 75 °C (accord. to DIN 40040)			–25 °C...+ 75 °C (accord. to DIN 40040)		
Accessories						
Snap-on potential distributor for 3-wire and 4-wire operation	83.039.0000.1			83.039.0000.1		
Adhesive labels, DIN A4 sheet	05.591.3255.0			05.591.3255.0		
2pole jumper for parallel output switching	Z7.258.1225.0			Z7.258.1225.0		
Marking tag, 8-digit, unmarked	04.242.1553.0			04.242.1553.0		
Marking tag, 8-digit, marked (upon request)						
End clamp for DIN rail	Z5.522.8553.0			Z5.522.8553.0		
Manual, English	05.562.1389.0			05.562.1389.0		

Distributed I/O Modules

ricos

Binary I/O modules

for 2-wire, 3-wire and 4-wire connections
Electronic components can be replaced without disconnecting the wiring

Dimensions (mm): W x H x D
69 x 92 x 51

Binary I/O module, 4 relay outputs

CE; Approvals: cULus in preparation

Description	Type	Part no.	Std. pack	
	ricos 4O RELAY	83.035.5200.1	1	
Mode display:				
	24 V – supply voltage connected: LED yellow			
	RUN – internal data transmission in progress: LED yellow			
	channel LED – switching status: LED green			
	channel LED – channel cursor: LED yellow			
Wiring diagrams, derating curves	**see pages 431 – 434**			
Module data				
Number of inputs	0			
Number of outputs	4			
Operating voltage	24 V DC, ±20 %, max. 5 % residual ripple			
Power input	< 1 W			
Stet	not required			
Required space on control side	1 output byte			
Input data				
Switching level "0" (EN 61131-2)				
Switching level "1" (EN 61131-2)				
Input current/channel (at 24 V DC)				
Status display				
Output data:				
Output voltage	250 V AC, 30 V DC			
Output current per channel	5 A AC/DC			
Max. total current per module	12 A AC/DC			
Simultaneity	100 %			
Load types	resistive / inductive			
Status display	LED green			
Output response				
General				
Signal delay per I/O channel	< 10 ms			
Max. voltage power contacts	250 V AC/DC			
Max. current power contacts	8 A AC/DC			
Insulation voltage	350 V AC, 50 Hz (system / supply)			
Creepage distances and clearances	DIN EN 61131-2; DIN EN 50178			
Electrostatic discharge	EN 61000-4-2; 8 KV air; 4 KV contact			
Electromagnetic fields	ENV 50140; 10 V/m; 30...1000 MHz			
Immunity / emitted interference	EN 61000-6-2/EN 55011, limit value class A, group 1			
Burst	accord. to EN 61000-4-4			
Connection style	spring connection			
Cross-sectional area-fine stranded / solid	26 – 14 AWG / 26 – 16 AWG			
Ambient temperature	0 °C...+55 °C (accord. to DIN 40040)			
Storage temperature	–25 °C...+75 °C (accord. to DIN 40040)			
Accessories				
Snap-on potential distributor for 3-wire and 4-wire operation	83.039.0000.1			
Adhesive labels, DIN A4 sheet	05.591.3255.0			
2pole jumper for parallel output switching	Z7.258.1225.0			
Marking tag, 8-digit, unmarked	04.242.1553.0			
Marking tag, 8-digit, marked (upon request)				
End clamp for DIN rail	Z5.522.8553.0			
Manual, English	05.562.1389.0			

Specifications are subject to change without notice

ricos

Binary I/O modules

Configurable as input or output,
for 2-wire, 3-wire and 4-wire connections
Electronic components can be replaced
without disconnecting the wiring

Dimensions (mm): W x H x D
69 x 92 x 51

Binary module 16 outputs
CE; Approvals: c UL us

Binary I/O module 8 inputs and 8 inputs/outputs
CE; Approvals: c UL us

Description	Type	Part no.	Std. pack	Type	Part no.	Std. pack
	ricos 16O	83.035.3200.1	1	ricos 8I 8I/O	83.035.3300.1	1
Mode display:						
	24 V – supply voltage connected: LED yellow			24 V – supply voltage connected: LED yellow		
	RUN – internal data transmission in progress: LED yellow			RUN – internal data transmission in progress: LED yellow		
	channel LED – switching status: LED green			channel LED – switching status: LED green		
	channel LED – channel cursor: LED yellow			channel LED – channel cursor: LED yellow		
Wiring diagrams, derating curves	**see pages 431 – 434**			**see pages 431 – 434**		
Module data						
Number of inputs	0			8 + max. 8		
Number of outputs	16			max. 8		
Operating voltage	24 V DC, ±20 %, max. 5 % residual ripple			24 V DC, ±20 %, max. 5 % residual ripple		
Power input	< 0.5 W			< 0.5 W		
Stet	not required			not required		
Required space on control side	2 output byte			2 input byte and 1output byte		
Input data						
Switching level "0" (EN 61131-2)				–30 V...+5 V DC		
Switching level "1" (EN 61131-2)				+15 V...+30 V DC		
Input current / channel (at 24 V DC)				4.5 mA/6.5 mA (combin. I/O)		
Status display				LED green		
Output data:						
Output voltage	operating voltage – 0.5 V DC			operating voltage –0.5 V DC		
Output current per channel	1000 mA DC			1000 mA DC		
Max. total current per module	8 A DC			8 A DC		
Simultaneity	50 %			100 %		
Load types	resistive, inductive			resistive, inductive		
Status display	LED green			LED green		
Output response	resistant to overload and short-circuit			resistant to overload and short-circuit		
General						
Signal delay per I/O channel	< 100 µs			< 100 µs		
Max. voltage power contacts	30 V DC			30 V DC		
Max. current power contacts	8 A DC			8 A DC		
Insulation voltage	350 V AC, 50 Hz (system / supply)			350 V AC, 50 Hz (system / supply)		
Creepage distances and clearances	DIN EN 61131-2; DIN EN 50178			DIN EN 61131-2; DIN EN 50178		
Electrostatic discharge	EN 61000-4-2; 8 KV air; 4 KV contact			EN 61000-4-2; 8 KV air; 4 KV contact		
Electromagnetic fields	ENV 50140; 10 V/m; 30...1000 MHz			ENV 50140; 10 V/m; 30...1000 MHz		
Immunity / emitted interference	EN 61000-6-2/EN 55011, limit value class A, group 1			EN 61000-6-2/EN 55011, limit value class A, group 1		
Burst	accord. to EN 61000-4-4			accord. to EN 61000-4-4		
Connection style	spring connection			spring connection		
Cross-sectional area-fine stranded / solid	26 – 14 AWG / 26 – 16 AWG			26 – 14 AWG / 26 – 16 AWG		
Ambient temperature	0 °C...+55 °C (accord. to DIN 40040)			0 °C...+55 °C (accord. to DIN 40040)		
Storage temperature	–25 °C...+75 °C (accord. to DIN 40040)			–25 °C...+75 °C (accord. to DIN 40040)		
Accessories						
Snap-on potential distributor for 3-wire and 4-wire operation	83.039.0000.1			83.039.0000.1		
Adhesive labels, DIN A4 sheet	05.591.3255.0			05.591.3255.0		
2pole jumper for parallel output switching	Z7.258.1225.0			Z7.258.1225.0		
Marking tag, 8-digit, unmarked	04.242.1553.0			04.242.1553.0		
Marking tag, 8-digit, marked (upon request)						
End clamp for DIN rail	Z5.522.8553.0			Z5.522.8553.0		
Manual, English	05.562.1389.0			05.562.1389.0		

Distributed I/O Modules

ricos

Binary I/O modules

for 2-wire, 3-wire and 4-wire connections
Electronic components can be replaced without disconnecting the wiring

Dimensions (mm): W x H x D
69 x 92 x 51

Binary I/O module 24 V DC 4 outputs 2 A DC

CE; Approvals: cULus in preparation

Binary I/O module 24 V DC 8 outputs, negative switching

CE; Approvals: cULus in preparation

Description	Type	Part no.	Std. pack	Type	Part no.	Std. pack
	ricos 4O DC 2A	83.035.3005.1	1	ricos 8O NEG	83.035.3210.1	1
Mode display:						
	24 V – supply voltage connected: LED yellow			24 V – supply voltage connected: LED yellow		
	RUN – internal data transmission in progress: LED yellow			RUN – internal data transmission in progress: LED yellow		
	channel LED – switching status: LED green			channel LED – switching status: LED green		
	channel LED – channel cursor: LED yellow			channel LED – channel cursor: LED yellow		
Wiring diagrams, derating curves	**see pages 431 – 434**			**see pages 431 – 434**		
Module data						
Number of inputs	0			0		
Number of outputs	4			8		
Operating voltage	24 V DC, ±20 %, max. 5 % residual ripple			24 V DC, ±20 %, max. 5 % residual ripple		
Power input	< 0.5 W			< 0.5 W		
Stet	not required			not required		
Required space on control side	1 output byte			1 output byte		
Input data						
Switching level "0" (EN 61131-2)						
Switching level "1" (EN 61131-2)						
Input current / channel (at 24 V DC)						
Status display						
Output data						
Output voltage	operating voltage –0.5 V DC			operating voltage –0.5 V DC		
Output current per channel	2 A DC			1000 mA DC		
Max. total current per module	8 A DC			8 A DC		
Simultaneity	100 %			100%		
Load types	resistive, inductive			resistive, inductive		
Status display	LED green			LED green		
Output response	resistant to overload and short-circuit			resistant to overload and short-circuit		
General						
Signal delay per I/O channel	< 100 µs			< 100 µs		
Max. voltage power contacts	30 V DC			30 V DC		
Max. current power contacts	8 A DC			8 A DC		
Insulation voltage	350 V AC, 50 Hz (system / supply)			350 V AC, 50 Hz (system / supply)		
Creepage distances and clearances	DIN EN 61131-2; DIN EN 50178			DIN EN 61131-2; DIN EN 50178		
Electrostatic discharge	EN 61000-4-2; 8 KV air; 4 KV contact			EN 61000-4-2; 8 KV air; 4 KV contact		
Electromagnetic fields	ENV 50140; 10 V/m; 30...1000 MHz			ENV 50140; 10 V/m; 30...1000 MHz		
Immunity / emitted interference	EN 61000-6-2/EN 55011, limit value class A, group 1			EN 61000-6-2/EN 55011, limit value class A, group 1		
Burst	accord. to EN 61000-4-4			accord. to EN 61000-4-4		
Connection style	spring connection			spring connection		
Cross-sectional area-fine stranded / solid	26 – 14 AWG / 26 – 16 AWG			26 – 14 AWG / 26 – 16 AWG		
Ambient temperature	0 °C...+55 °C (accord. to DIN 40040)			0 °C...+55 °C (accord. to DIN 40040)		
Storage temperature	–25 °C...+75 °C (accord. to DIN 40040)			–25 °C...+75 °C (accord. to DIN 40040)		
Accessories						
Snap-on potential distributor for 3-wire and 4-wire operation	83.039.0000.1			83.039.0000.1		
Adhesive labels, DIN A4 sheet	05.591.3255.0			05.591.3255.0		
2pole jumper for parallel output switching	Z7.258.1225.0			Z7.258.1225.0		
Marking tag, 8-digit, unmarked	04.242.1553.0			04.242.1553.0		
Marking tag, 8-digit, marked (upon request)						
End clamp for DIN rail	Z5.522.8553.0			Z5.522.8553.0		
Manual, English	05.562.1389.0			05.562.1389.0		

Specifications are subject to change without notice

Distributed I/O Modules

ricos

Counter/positioning modules

2 or 4 counters per module
up to 2 threshold values can be set

Positioning module for 2 axes
Electronic components can be replaced without disconnecting the wiring

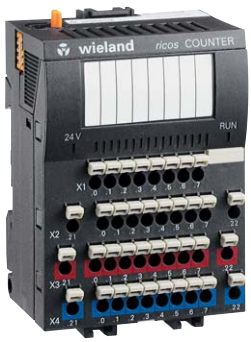

Dimensions (mm): W x H x D
69 x 92 x 51

Binary I/O module
2–32 bit / 4–16 bit counter
CE; Approvals: cULus in preparation

Binary I/O module,
positioning module
CE; Approvals: cULus in preparation

Description	Type	Part no.	Std. pack	Type	Part no.	Std. pack
	ricos COUNTER	83.035.5400.1	1	ricos POSITION	83.035.5410.1	1
Mode display:						
	24 V – supply voltage connected: LED yellow			24 V – supply voltage connected: LED yellow		
	RUN – internal data transmission in progress: LED yellow			RUN – internal data transmission in progress: LED yellow		
	channel LED – switching status: LED green			channel LED – switching status: LED green		
	channel LED – channel cursor: LED yellow			channel LED – channel cursor: LED yellow		
Wiring diagrams, derating curves	**see page 434**			**see page 434**		
Module data						
Number of ...	counters: 4 x 16 Bit or 2 x 32 Bit			controllable axes: 2		
Counting range	0 to 2^{16} or 0 to 2^{32}			-2^{31} up to $2^{31}-1$		
Number of inputs/outputs	12/4 or 6/4			10/6		
Counting frequency	200 Hz, 2 kHz, 20 kHz, 200 kHz configurable			max. 200 kHz		
Configurable	via PC or PLC			via PC or PLC		
Required space on control side	3 to 5 words			5 words		
Input data						
Switching level "0" (EN 61131-2)	–30 V...+5 V DC			–30 V...+5 V DC		
Switching level "1" (EN 61131-2)	+15 V...+30 V DC			+15 V...+30 V DC		
Input current / channel (at 24 V DC)	7.5 mA			7.5 mA		
Status display	LED green			LED green		
Output data:						
Output voltage	operating voltage –0.5 V DC			operating voltage –0.5 V DC		
Output current per channel	1000 mA DC			1000 mA DC		
Max. total current per module	4 A DC			6 A DC		
Simultaneity	100 %			100 %		
Load types	resistive, inductive			resistive, inductive		
Status display	LED green			LED green		
Output response	resistant to overload and short-circuit			resistant to overload and short-circuit		
Operating voltage / power input	24 V DC, ±20 %, max. 5 % residual ripple/< 3 W			24 V DC, ±20 %, max. 5 % residual ripple/< 3 W		
General						
Signal delay input/output	< 1 us/< 300 µs			< 100 µs		
Max. voltage power contacts	30 V DC			30 V DC		
Max. current power contacts	8 A DC			8 A DC		
Insulation voltage	350 V AC, 50 Hz (system / supply)			350 V AC, 50 Hz (system / supply)		
Creepage distances and clearances	DIN EN 61131-2; DIN EN 50178			DIN EN 61131-2; DIN EN 50178		
Electrostatic discharge	EN 61000-4-2; 8 KV air; 4 KV contact			EN 61000-4-2; 8 KV air; 4 KV contact		
Electromagnetic fields	ENV 50140; 10 V/m; 30...1000 MHz			ENV 50140; 10 V/m; 30...1000 MHz		
Immunity / emitted interference	EN 61000-6-2/EN 55011, limit value class A, group 1			EN 61000-6-2/EN 55011, limit value class A, group 1		
Burst	accord. to EN 61000-4-4			accord. to EN 61000-4-4		
Connection style	spring connection			spring connection		
Cross-sectional area-fine stranded / solid	26 – 14 AWG / 26 – 16 AWG			26 – 14 AWG / 26 – 16 AWG		
Ambient temperature	0 °C...+55 °C (accord. to DIN 40040)			0 °C...+55 °C (accord. to DIN 40040)		
Storage temperature	–25 °C...+75 °C (accord. to DIN 40040)			–25 °C...+75 °C (accord. to DIN 40040)		
Accessories						
Snap-on potential distributor for 3-wire and 4-wire operation	83.039.0000.1			83.039.0000.1		
Adhesive labels, DIN A4 sheet	05.591.3255.0			05.591.3255.0		
2pole jumper for parallel output switching	Z7.258.1225.0			Z7.258.1225.0		
Marking tag, 8-digit, unmarked	04.242.1553.0			04.242.1553.0		
Marking tag, 8-digit, marked (upon request)						
End clamp for DIN rail	Z5.522.8553.0			Z5.522.8553.0		
Manual, English	05.562.1389.0			05.562.1389.0		

Specifications are subject to change without notice

Distributed I/O Modules

ricos

PT/TC Modules

4 sensor inputs per module, self-setting to PT100/PT1000 sensors for 2-wire, 3-wire and 4-wire connection for thermocouples type J/K

Dimensions (mm): W x H x D
69 x 92 x 51

Analog module 4 inputs PT 100/1000
CE; Approvals: cULus in preparation

Analog module, 4 inputs TC J/K, T
CE; Approvals: cULus in preparation

Description	Type	Part no.	Std. pack	Type	Part no.	Std. pack
	ricos 4AI Pt100	83.035.4040.1	1	ricos 4AI TC	83.035.4050.1	1
Mode display:						
	24 V – supply voltage connected: LED yellow			24 V – supply voltage connected: LED yellow		
	RUN – internal data transmission in progress: LED yellow			RUN – internal data transmission in progress: LED yellow		
	channel LED – switching status: LED green			channel LED – switching status: LED green		
	channel LED – channel cursor: LED yellow			channel LED – channel cursor: LED yellow		
Wiring diagrams, derating curves	**see page 434**			**see page 434**		
Module data	**Module data (accessories)**					
Number of inputs	4			4		
Temperature probe	PT 100; PT 1000; self-setting			J, K, T		
Operating voltage	24 V DC, ±20 %, max. 5 % residual ripple			24 V DC, ±20 %, max. 5 % residual ripple		
Power input	< 3 W			< 3 W		
Configurable	PC, PLC, diagnosis code 9 bus coupler			PC, PLC, diagnosis code 9 bus coupler		
Required space on control side	1 to 4 input words (depending on configuration)			1 to 4 input words (depending on configuration)		
Technical information						
Measuring range	–100 °C...+450 °C			–100...+1370 °C		
Resolution	16 Bit			14 Bit + sign		
Sampling frequency	2 ms			2 ms		
Resolution	< 0.1 °C			0.1 °C		
Accuracy	±1 °C			0.5% over total measuring range		
Power supply sensor	supply via PT 100 module					
Measuring time	< 100 ms			< 100 ms		
Insulation voltage	350 V AC, 50 Hz (system / supply)			350 V AC, 50 Hz (system / supply)		
Creepage distances and clearances	DIN EN 61131-2; DIN EN 50178			DIN EN 61131-2; DIN EN 50178		
Electrostatic discharge	EN 61000-4-2; 8 KV air; 4 KV contact			EN 61000-4-2; 8 KV air; 4 KV contact		
Electromagnetic fields	ENV 50140; 10 V/m; 30...1000 MHz			ENV 50140; 10 V/m; 30...1000 MHz		
Immunity / emitted interference	EN 61000-6-2/EN 55011, limit value class A, group 1			EN 61000-6-2/EN 55011, limit value class A, group 1		
Burst	accord. to EN 61000-4-4			accord. to EN 61000-4-4		
Connection style	spring connection			spring connection		
Cross-sectional area-fine stranded / solid	26 – 14 AWG / 26 – 16 AWG			26 – 14 AWG / 26 – 16 AWG		
Ambient temperature	0 °C...+55 °C (accord. to DIN 40040)			0 °C...+55 °C (accord. to DIN 40040)		
Storage temperature	–25 °C...+75 °C (accord. to DIN 40040)			–25 °C...+75 °C (accord. to DIN 40040)		
Accessories						
Snap-on potential distributor for 3-wire and 4-wire operation	83.039.0000.1					
Adhesive labels, DIN A4 sheet	05.591.3255.0					
2pole jumper for parallel output switching	Z7.258.1225.0					
Marking tag, 8-digit, unmarked	04.242.1553.0					
Marking tag, 8-digit, marked (upon request)						
End clamp for DIN rail	Z5.522.8553.0					
Manual, English	05.562.1389.0			05.562.1389.0		

Distributed I/O Modules

ricos

Analog I/O modules

for default signals of 0...10 V or ±10 V
for 2-wire, 3-wire and 4-wire connection
Electronic components can be replaced without disconnecting the wiring

Dimensions (mm): W x H x D
69 x 92 x 51

Analog I/O module 4 inputs 0 to 10 V

CE; Approvals: cULus in preparation

Analog I/O module 4 inputs ±10 V

CE; Approvals: cULus

Description	Type	Part no.	Std. pack	Type	Part no.	Std. pack
	ricos 4AI/0...10 V	83.035.4001.1	1	ricos 4AI/±10 V	83.035.4000.1	1
Mode display:	24 V – supply voltage connected: LED yellow			24 V – supply voltage connected: LED yellow		
	RUN – internal data transmission in progress: LED yellow			RUN – internal data transmission in progress: LED yellow		
	channel LED – switching status: LED green			channel LED – switching status: LED green		
	channel LED – channel cursor: LED yellow			channel LED – channel cursor: LED yellow		
Wiring diagrams, derating curves	**see page 433**			**see page 433**		
Module data						
Number of inputs	4			4		
Number of outputs	0			0		
Operating voltage	24 V DC, ±20 %, max. 5 % residual ripple			24 V DC, ±20 %, max. 5 % residual ripple		
Power input	< 2.5 W			< 2.5 W		
Configurable	PC, PLC, diagnosis code 9 bus coupler			PC, PLC, diagnosis code 9 bus coupler		
Required space on control side	1 to 4 input words (depending on configuration)			1 to 4 input words (depending on configuration)		
Technical information						
Measuring range	0...+9.995 V			–10...+9.995 V		
Resolution	12 Bit			12 Bit		
Sampling frequency	< 2 ms			< 2 ms		
Offset error	typ. 0.5 LSB; max. 1 LSB			typ. 0.5 LSB; max. 1 LSB		
Channel crosstalk	–74 dB (f < 100 Hz)			–74 dB (f < 100 Hz)		
Gain error	typ. 0.08 % FSR; max. 0.2 % FSR			typ. 0.08 % FSR; max. 0.2 % FSR		
Noise voltage	typ. 0.5 LSB; max. 2 LSB			typ. 0.5 LSB; max. 2 LSB		
Offset error due to source impedance	+3 LSB/kOhm (Uinput = 0 V)			+3 LSB/kOhm (Uinput = 0 V)		
Galvanic isolation	75 V (AGND/shield)			75 V (AGND/shield)		
Common mode range	+12.8 V DC			–12.8 V/+12.8 V DC		
Input resistance	1 MOhm			1 MOhm		
Input current	typ. 15 µA			typ. 15 µA		
Short-circuit current / short-circuit duration	–			–		
Ripple	–			–		
Voltage range for open-circuit recognition on both sides	9.9 V (floating source)			–10V/9.9 V (floating source)		
Common mode rejection	87 dB (f = DC); 70 dB (f = 50 Hz); 60 dB (f = 1 kHz)			87 dB (f = DC); 70 dB (f = 50 Hz); 60 dB (f = 1 kHz)		
Common mode input resistance	500 kOhm (inputs short-circuited against AGND)			500 kOhm (inputs short-circuited against AGND)		
Capacitive common mode input resistance	4.4 nF (inputs short-circuited against AGND)			4.4 nF (inputs short-circuited against AGND)		
Dynamic common mode input resistance	1.1 kOhm (f > 100 kHz)			1.1 kOhm (f > 100 kHz)		
Insulation voltage	350 V AC, 50 Hz (system / supply)			350 V AC, 50 Hz (system / supply)		
Creepage distances and clearances	DIN EN 61131-2; DIN EN 50178			DIN EN 61131-2; DIN EN 50178		
Electrostatic discharge	EN 61000-4-2; 8 KV air; 4 KV contact			EN 61000-4-2; 8 KV air; 4 KV contact		
Electromagnetic fields	ENV 50140; 10 V/m; 30...1000 MHz			ENV 50140; 10 V/m; 30...1000 MHz		
Immunity/emitted interference	EN 61000-6-2/EN 55011, limit value class A, group 1			EN 61000-6-2/EN 55011, limit value class A, group 1		
Burst	accord. to EN 61000-4-4			accord. to EN 61000-4-4		
Connection style	spring connection			spring connection		
Cross-sectional area-fine stranded / solid	26 – 14 AWG / 26 – 16 AWG			26 – 14 AWG / 26 – 16 AWG		
Ambient temperature	0 °C...+55 °C (accord. to DIN 40040)			0 °C...+55 °C (accord. to DIN 40040)		
Storage temperature	–25 °C...+75 °C (accord. to DIN 40040)			–25 °C...+75 °C (accord. to DIN 40040)		
Accessories						
Snap-on potential distributor for 3-wire and 4-wire operation	83.039.0000.1			83.039.0000.1		
Adhesive labels, DIN A4 sheet	05.591.3255.0			05.591.3255.0		
2pole jumper for parallel output switching	Z7.258.1225.0			Z7.258.1225.0		
Marking tag, 8-digit, unmarked	04.242.1553.0			04.242.1553.0		
Marking tag, 8-digit, marked (upon request)						
End clamp for DIN rail	Z5.522.8553.0			Z5.522.8553.0		
Manual, English	05.562.1389.0			05.562.1389.0		

Specifications are subject to change without notice

ricos

Analog I/O modules

for default signals of 0...10 V or ±10 V
for 2-wire, 3-wire and 4-wire connection
Electronic components can be replaced without disconnecting the wiring

Dimensions (mm): W x H x D
69 x 92 x 51

Analog I/O module
4 inputs and 4 outputs 0 to 10 V

CE; Approvals: cULus in preparation

Analog I/O module
4 inputs and 4 outputs ±10 V

CE; Approvals: cULus

Description	Type	Part no.	Std. pack	Type	Part no.	Std. pack
	ricos 4AI4AO/0...10 V	83.035.4101.1	1	ricos 4AI4AO/±10 V	83.035.4100.1	1
Mode display:	24 V – supply voltage connected: LED yellow			24 V – supply voltage connected: LED yellow		
	RUN – internal data transmission in progress: LED yellow			RUN – internal data transmission in progress: LED yellow		
	channel LED – switching status: LED green			channel LED – switching status: LED green		
	channel LED – channel cursor: LED yellow			channel LED – channel cursor: LED yellow		
Wiring diagrams, derating curves	**see page 433**			**see page 433**		
Module data						
Number of inputs	4			4		
Number of outputs	4			4		
Operating voltage	24 V DC, ±20 %, max. 5 % residual ripple			24 V DC, ±20 %, max. 5 % residual ripple		
Power input	< 2.5 W			< 2.5 W		
Configurable	PC, PLC, diagnosis code 9 bus coupler			PC, PLC, diagnosis code 9 bus coupler		
Required space on control side	1 to 4 input / output words (depending on configuration)			1 to 4 input / output words (depending on configuration)		
Technical information						
Measuring range	0...+9.995 V			–10...+9.995 V		
Resolution	12 Bit			12 Bit		
Sampling frequency	< 2 ms			< 2 ms		
Offset error	typ. 0.5 LSB; max. 1 LSB			typ. 0.5 LSB; max. 1 LSB		
Channel crosstalk	–74 dB (f < 100 Hz)			–74 dB (f < 100 Hz)		
Gain error	Input: max. 0.2 % FSR; output: max. 0.12 % FSR			typ. 0.08 % FSR; max. 0.2 % FSR		
Noise voltage	typ. 0.5 LSB; max. 2 LSB			typ. 0.5 LSB; max. 2 LSB		
Offset error	Input: +3 LSB/kOhm (Uinput = 0 V); output:: max. 10 mV			+3 LSB/kOhm (Uinput = 0 V)		
Galvanic isolation	75 V (AGND/shield)			75 V (AGND/shield)		
Common mode range	+12.8 V DC			–12.8 V/+12.8 V DC		
Input resistance	1 MOhm			1 MOhm		
Input current/output current	typ. 15 µA/10 mA			typ. 15 µA		
Short-circuit current / short-circuit duration	20 mA/100 % ON			20 mA/100 % ON		
Ripple	5 mV			5 mV		
Voltage range for open-circuit recognition on both sides	9.9 V (floating source)			-10V/9.9 V (floating source)		
Common mode rejection	87 dB (f = DC); 70 dB (f = 50 Hz); 60 dB (f = 1 kHz)			87 dB (f = DC); 70 dB (f = 50 Hz); 60 dB (f = 1 kHz)		
Common mode input resistance	500 kOhm (inputs short-circuited against AGND)			500 kOhm (inputs short-circuited against AGND)		
Capacitive common mode input resistance	4.4 nF (inputs short-circuited against AGND)			4.4 nF (inputs short-circuited against AGND)		
Dynamic common mode input resistance	1.1 kOhm (f > 100 kHz)			1.1 kOhm (f > 100 kHz)		
Insulation voltage	350 V AC, 50 Hz (system / supply)			350 V AC, 50 Hz (system / supply)		
Creepage distances and clearances	DIN EN 61131-2; DIN EN 50178			DIN EN 61131-2; DIN EN 50178		
Electrostatic discharge	EN 61000-4-2; 8 KV air; 4 KV contact			EN 61000-4-2; 8 KV air; 4 KV contact		
Electromagnetic fields	ENV 50140; 10 V/m; 30...1000 MHz			ENV 50140; 10 V/m; 30...1000 MHz		
Immunity / emitted interference	EN 61000-6-2/EN 55011, limit value class A, group 1			EN 61000-6-2/EN 55011, limit value class A, group 1		
Burst	accord. to EN 61000-4-4			accord. to EN 61000-4-4		
Connection style	spring connection			spring connection		
Cross-sectional area-fine stranded / solid	26 – 14 AWG / 26 – 16 AWG			26 – 14 AWG / 26 – 16 AWG		
Ambient temperature	0 °C...+55 °C (accord. to DIN 40040)			0 °C...+55 °C (accord. to DIN 40040)		
Storage temperature	–25 °C...+75 °C (accord. to DIN 40040)			–25 °C...+75 °C (accord. to DIN 40040)		
Accessories						
Snap-on potential distributor for 3-wire and 4-wire operation	83.039.0000.1			83.039.0000.1		
Adhesive labels, DIN A4 sheet	05.591.3255.0			05.591.3255.0		
2pole jumper for parallel output switching	Z7.258.1225.0			Z7.258.1225.0		
Marking tag, 8-digit, unmarked	04.242.1553.0			04.242.1553.0		
Marking tag, 8-digit, marked (upon request)						
End clamp for DIN rail	Z5.522.8553.0			Z5.522.8553.0		
Manual, English	05.562.1389.0			05.562.1389.0		

Distributed I/O Modules

ricos

Analog I/O modules

for default signals of 0...20 mA
for 2-wire, 3-wire and 4-wire connection
Electronic components can be replaced without disconnecting the wiring

Dimensions (mm): W x H x D
69 x 92 x 51

Analog I/O module 4 inputs 0 to 20 mA

CE; Approvals: cULus

Description	Type	Part no.	Std. pack
	ricos 4AI/0–20 mA	83.035.4010.1	1
Mode display:			
	24 V – supply voltage connected: LED yellow		
	RUN – internal data transmission in progress: LED yellow		
	channel LED – switching status: LED green		
	channel LED – channel cursor: LED yellow		
Wiring diagrams, derating curves	**see page 433**		
Module data			
Number of inputs	4		
Number of outputs	0		
Operating voltage	24 V DC, ±20 %, max. 5 % residual ripple		
Power input	< 2.5 W		
Configurable	PC, PLC, diagnosis code 9 bus coupler		
Required space on control side	1 to 4 input words (depending on configuration)		
Technical information			
Measuring range	0...+19.995 mA		
Resolution	12 Bit		
Sampling frequency	2 ms		
Offset error	typ. 0.5 LSB; max. 1 LSB		
Channel crosstalk	–74 dB (f < 100 Hz)		
Gain error	max. 0.45 % FSR		
Noise voltage	typ. 0.5 LSB; max. 2 LSB		
Drift rate	–		
Galvanic isolation	75 V (AGND/shield)		
Output load	max. 100.1 Ohm		
Continuous input current	40 mA bei 100 % ON		
Continuous input voltage	4 V bei 100 % ON		
Short-circuit current / short-circuit duration	–		
Ripple	–		
Dynamic common mode input resistance	1.1 kOhm (f > 100 kHz)		
Insulation voltage	350 V AC, 50 Hz (system / supply)		
Creepage distances and clearances	DIN EN 61131-2; DIN EN 50178		
Electrostatic discharge	EN 61000-4-2; 8 KV air; 4 KV contact		
Electromagnetic fields	ENV 50140; 10 V/m; 30...1000 MHz		
Immunity / emitted interference	EN 61000-6-2/EN 55011, limit value class A, group 1		
Burst	accord. to EN 61000-4-4		
Connection style	spring connection		
Cross-sectional area-fine stranded / solid	26 – 14 AWG / 26 – 16 AWG		
Ambient temperature	0 °C...+55 °C (accord. to DIN 40040)		
Storage temperature	–25 °C...+75 °C (accord. to DIN 40040)		
Accessories			
Snap-on potential distributor for 3-wire and 4-wire operation	83.039.0000.1		
Adhesive labels, DIN A4 sheet	05.591.3255.0		
2pole jumper for parallel output switching	Z7.258.1225.0		
Marking tag, 8-digit, unmarked	04.242.1553.0		
Marking tag, 8-digit, marked (upon request)			
End clamp for DIN rail	Z5.522.8553.0		
Manual, English	05.562.1389.0		

Specifications are subject to change without notice

ricos

Analog I/O modules

for default signals of 0...20 mA or 4...20 mA
for 2-wire, 3-wire and 4-wire connection
Electronic components can be replaced without disconnecting the wiring

Dimensions (mm): W x H x D
69 x 92 x 51

Description	Type	Part no.	Std. pack	Type	Part no.	Std. pack
	ricos 4AIAO/0–20 mA	83.035.4110.1	1	ricos 4AIAO/4–20 mA	83.035.4111.1	1
Mode display:						
	24 V – supply voltage connected: LED yellow			24 V – supply voltage connected: LED yellow		
	RUN – internal data transmission in progress: LED yellow			RUN – internal data transmission in progress: LED yellow		
	channel LED – switching status: LED green			channel LED – switching status: LED green		
	channel LED – channel cursor: LED yellow			channel LED – channel cursor: LED yellow		
Wiring diagrams, derating curves	**see page 433**			**see page 433**		
Module data						
Number of inputs	4			4		
Number of outputs	4			4		
Operating voltage	24 V DC, ±20 %, max. 5 % residual ripple			24 V DC, ±20 %, max. 5 % residual ripple		
Power input	< 2.5 W			< 2.5 W		
Configurable	PC, PLC, diagnosis code 9 bus coupler			PC, PLC, diagnosis code 9 bus coupler		
Required space on control side	1 to 4 input / output words (depending on configuration)			1 to 4 input / output words (depending on configuration)		
Technical information						
Measuring range	0...+19.995 mA			4...+19.995 mA		
Resolution	12 Bit			12 Bit		
Sampling frequency	2 ms			2 ms		
Offset error	Input: max. 1 LSB; output: max. 4 uA			Input: max. 1 LSB; output: max. 4 uA		
Channel crosstalk	–74 dB (f < 100 Hz)			–74 dB (f < 100 Hz)		
Gain Error	Input: max. 0.45 % FSR; output: max. 0.5 % FSR			Input: max. 0.45 % FSR; output: max. 0.5 % FSR		
Noise voltage	typ. 0.5 LSB; max. 2 LSB			typ. 0.5 LSB; max. 2 LSB		
Drift rate	4 µA/ms			4 µA/ms		
Galvanic isolation	75 V (AGND/shield)			75 V (AGND/shield)		
Output load	Input: max. 100.1 Ohm; output: 500 Ohm			Input: max. 100.1 Ohm; output: 500 Ohm		
Continuous input current	40 mA bei 100 % ON			40 mA bei 100 % ON		
Continuous input voltage	4 V bei 100 % ON			4 V bei 100 % ON		
Short-circuit current / short-circuit duration	20 mA; 100 % ON			20 mA; 100 % ON		
Ripple	10 µA			10 µA		
Dynamic common mode input resistance	1.1 kOhm (f > 100 kHz)			1.1 kOhm (f > 100 kHz)		
Insulation voltage	350 V AC, 50 Hz (system / supply)			350 V AC, 50 Hz (system / supply)		
Creepage distances and clearances	DIN EN 61131-2; DIN EN 50178			DIN EN 61131-2; DIN EN 50178		
Electrostatic discharge	EN 61000-4-2; 8 KV air; 4 KV contact			EN 61000-4-2; 8 KV air; 4 KV contact		
Electromagnetic fields	ENV 50140; 10 V/m; 30...1000 MHz			ENV 50140; 10 V/m; 30...1000 MHz		
Immunity / emitted interference	EN 61000-6-2/EN 55011, limit value class A, group 1			EN 61000-6-2/EN 55011, limit value class A, group 1		
Burst	accord. to EN 61000-4-4			accord. to EN 61000-4-4		
Connection style	spring connection			spring connection		
Cross-sectional area-fine stranded / solid	26 – 14 AWG / 26 – 16 AWG			26 – 14 AWG / 26 – 16 AWG		
Ambient temperature	0 °C...+55 °C (accord. to DIN 40040)			0 °C...+55 °C (accord. to DIN 40040)		
Storage temperature	–25 °C...+75 °C (accord. to DIN 40040)			–25 °C...+75 °C (accord. to DIN 40040)		
Accessories						
Snap-on potential distributor for 3-wire and 4-wire operation	83.039.0000.1			83.039.0000.1		
Adhesive labels, DIN A4 sheet	05.591.3255.0			05.591.3255.0		
2pole jumper for parallel output switching	Z7.258.1225.0			Z7.258.1225.0		
Marking tag, 8-digit, unmarked	04.242.1553.0			04.242.1553.0		
Marking tag, 8-digit, marked (upon request)						
End clamp for DIN rail	Z5.522.8553.0			Z5.522.8553.0		
Manual, English	05.562.1389.0			05.562.1389.0		

Approvals: CE; Approvals: CE; in preparation

Distributed I/O Modules

ricos

Field bus coupler including DI/DO channels

Compact modules configurable as input or output for 2-wire, 3-wire and 4-wire connection
Electronic components can be replaced without disconnecting the wiring

Dimensions (mm): W x H x D
69 x 92 x 51

	Compact modules PROFIBUS DP CE; Approvals: cULus, Profibus certification			Compact modules Interbus CE; Approvals: cULus, Interbus certification		
8 DI or 8 DO (configurable)	ricos com-dp 8I/O	83.030.1100.1	1	ricos com-s 8I/O	83.031.1100.1	1
16 DI	ricos com-dp 16I	83.030.1000.1	1	ricos com-s 16I	83.031.1000.1	1
16 DO	ricos com-dp 16O	83.030.1200.1	1	ricos com-s 16O	83.031.1200.1	1
8 DI and 8 DI/8 DO configurable*	ricos com-dp 8I 8I/O	83.030.1300.1	1	ricos com-s 8I 8I/O	83.031.1300.1	1
Mode display:						
	24 V – supply voltage connected: LED yellow			24 V – supply voltage connected: LED yellow		
	RUN – internal data transmission in progress: LED yellow			RUN – internal data transmission in progress: LED yellow		
	channel LED – switching status: LED green			channel LED – switching status: LED green		
	channel LED – channel cursor: LED yellow			channel LED – channel cursor: LED yellow		
Wiring diagrams, derating curves	**see page 431**			**see page 431**		
System data						
Max. number of nodes	126			256		
Transmission medium	screened copper cable 2 x 0.25 mm²/AWG 23			screened copper cable 5 x 0.25 mm²/AWG 23		
Max. network expansion	100 m – 1200 m (depending on baud rate / cable)			400 m (remote bus)		
Baud rate	9.6 kBaud...12 Mbaud			500 kBaud		
Internal bus refresh	2 ms			2 ms		
Bus connection	1 x D-SUB 9, screened female connector			2 x D-SUB 9, screened female and male connectors		
Input data						
Switching level "0" (EN 61131-2)	–30 V...+5 V DC			–30 V...+5 V DC		
Switching level "1" (EN 61131-2)	+15 V...+30 V DC			+15 V...+30 V DC		
Input current / channel (at 24 V DC)	4.5 mA/6.5 mA (combin. I/O)			4.5 mA/6.5 mA (combin. I/O)		
Status display	LED green			LED green		
Output data:						
Output voltage	operating voltage –0.5 V DC			operating voltage –0.5 V DC		
Output current per channel	1000 mA DC			1000 mA DC		
Max. total current per module	8 A DC			8 A DC		
Simultaneity	100 % at max. 500 mA per channel			100 % at max. 500 mA per channel		
Load types	resistive, inductive			resistive, inductive		
Status display	LED green			LED green		
Output response	resistant to overload and short-circuit			resistant to overload and short-circuit		
General						
Signal delay per I/O channel	< 100 µs			< 100 µs		
Max. voltage power contacts	30 V DC			30 V DC		
Max. current power contacts	8 A DC			8 A DC		
Insulation voltage	350 V AC, 50 Hz (system / supply)			350 V AC, 50 Hz (system / supply)		
Creepage distances and clearances	DIN EN 61131-2; DIN EN 50178			DIN EN 61131-2; DIN EN 50178		
Electrostatic discharge	EN 61000-4-2; 8 KV air; 4 KV contact			EN 61000-4-2; 8 KV air; 4 KV contact		
Electromagnetic fields	ENV 50140; 10 V/m; 30...1000 MHz			ENV 50140; 10 V/m; 30...1000 MHz		
Immunity / emitted interference	EN 61000-6-2/EN 55011, limit value class A, group 1			EN 61000-6-2/EN 55011, limit value class A, group 1		
Burst	accord. to EN 61000-4-4			accord. to EN 61000-4-4		
Connection style	spring connection			spring connection		
Cross-sectional area-fine stranded / solid	26 – 14 AWG / 26 – 16 AWG			26 – 14 AWG / 26 – 16 AWG		
Ambient temperature	0 °C...+55 °C (accord. to DIN 40040)			0 °C...+55 °C (accord. to DIN 40040)		
Storage temperature	–25 °C...+75 °C (accord. to DIN 40040)			–25 °C...+75 °C (accord. to DIN 40040)		
Accessories						
Snap-on potential distributor for 3-wire and 4-wire operation	83.039.0000.1			83.039.0000.1		
Adhesive labels, DIN A4 sheet	05.591.3255.0			05.591.3255.0		
2pole jumper for parallel output switching	Z7.258.1225.0			Z7.258.1225.0		
Marking tag, 8-digit, unmarked	04.242.1553.0			04.242.1553.0		
Marking tag, 8-digit, marked (upon request)						
End clamp for DIN rail	Z5.522.8553.0			Z5.522.8553.0		
GSD file and Word template for labels	05.591.3255.0			05.591.3255.0		
Manual, English	05.562.1389.0			05.562.1389.0		

Specifications are subject to change without notice

ricos

Field bus coupler including DI/DO channels

Compact modules
Configurable as input or output for 2-wire, 3-wire and 4-wire connection

Electronic components can be replaced without disconnecting the wiring

Dimensions (mm): W x H x D
69 x 92 x 51

Compact modules DeviceNet

CE; Approvals: c UL us

Compact modules CANopen

CE; Approvals: c UL us in preparation

Description	Type	Part no.	Std. pack	Type	Part no.	Std. pack
8 DI or 8 DO (configurable)	ricos com-dn 8I/O	83.032.1100.1	1	ricos com-co 8I/O	83.033.1100.1	1
16 DI	ricos com-dn 16I	83.032.1000.1	1	ricos com-co 16I	83.033.1000.1	1
16 DO	ricos com-dn 16O	83.032.1200.1	1	ricos com-co 16O	83.033.1200.1	1
8 DI and 8 DI/8 DO configurable	ricos com-dn 8I 8I/O	83.032.1300.1	1	ricos com-co 8I 8I/O	83.033.1300.1	1
Mode display:	24 V – supply voltage connected: LED yellow			24 V – supply voltage connected: LED yellow		
	RUN – internal data transmission in progress: LED yellow			RUN – internal data transmission in progress: LED yellow		
	channel LED – switching status: LED green			channel LED – switching status: LED green		
	channel LED – channel cursor: LED yellow			channel LED – channel cursor: LED yellow		
Wiring diagrams, derating curves	**see page 431**			**see page 431**		
System data						
Max. number of nodes	64 with repeater			256		
Transmission medium	screened copper cable trunk line AWG 15.18			screened copper cable 3 x 0.25 mm²/AWG 23		
	screened copper cable drop line AWG 22,24					
Max. network expansion	100 m–500 m (depending on baud rate / cable)			100 m–500 m (depending on baud rate / cable)		
Baud rate	125/250/500 kBaud (setting via keyboard)			10 kBaud...1 MBaud (setting via keyboard)		
Internal bus refresh	2 ms			2 ms		
Bus connection	5pole connector, screw			5pole connector, screw		
Input data						
Switching level "0" (EN 61131-2)	–30 V...+5 V DC			–30 V...+5 V DC		
Switching level "1" (EN 61131-2)	+15 V...+30 V DC			+15 V...+30 V DC		
Input current / channel (at 24 V DC)	4.5 mA/6.5 mA (combin. I/O)			4.5 mA/6.5 mA (combin. I/O)		
Status display	LED green			LED green		
Output data:						
Output voltage	operating voltage –0.5 V DC			operating voltage –0.5 V DC		
Output current per channel	1000 mA DC			1000 mA DC		
Max. total current per module	8 A DC			8 A DC		
Simultaneity	100 % at max. 500 mA per channel			100 % at max. 500 mA per channel		
Load types	resistive, inductive			resistive, inductive		
Status display	LED green			LED green		
Output response	resistant to overload and short-circuit			resistant to overload and short-circuit		
General						
Signal delay per I/O channel	< 100 us			< 100 us		
Max. voltage power contacts	30 V DC			30 V DC		
Max. current power contacts	8 A DC			8 A DC		
Insulation voltage	350 V AC, 50 Hz (system / supply)			350 V AC, 50 Hz (system / supply)		
Creepage distances and clearances	DIN EN 61131-2; DIN EN 50178			DIN EN 61131-2; DIN EN 50178		
Electrostatic discharge	EN 61000-4-2; 8 KV air; 4 KV contact			EN 61000-4-2; 8 KV air; 4 KV contact		
Electromagnetic fields	ENV 50140; 10 V/m; 30...1000 MHz			ENV 50140; 10 V/m; 30...1000 MHz		
Immunity/emitted interference	EN 61000-6-2/EN 55011, limit value class A, group 1			EN 61000-6-2/EN 55011, limit value class A, group 1		
Burst	accord. to EN 61000-4-4			accord. to EN 61000-4-4		
Connection style	spring connection			spring connection		
Cross-sectional area-fine stranded / solid	26 – 14 AWG / 26 – 16 AWG			26 – 14 AWG / 26 – 16 AWG		
Ambient temperature	0 °C...+55 °C (accord. to DIN 40040)			0 °C...+55 °C (accord. to DIN 40040)		
Storage temperature	–25 °C...+75 °C (accord. to DIN 40040)			–25 °C...+75 °C (accord. to DIN 40040)		
Accessories						
Snap-on potential distributor for 3-wire and 4-wire operation	83.039.0000.1			83.039.0000.1		
Adhesive labels, DIN A4 sheet	05.591.3255.0			05.591.3255.0		
2pole jumper for parallel output switching	Z7.258.1225.0			Z7.258.1225.0		
Marking tag, 8-digit, unmarked	04.242.1553.0			04.242.1553.0		
Marking tag, 8-digit, marked (upon request)						
End clamp for DIN rail	Z5.522.8553.0			Z5.522.8553.0		
EDS file and Word template for labels	05.591.3255.0			05.591.3255.0		
Manual, English	05.562.1389.0			05.562.1389.0		

Wiring diagrams of the Buscoupler

PROFIBUS DP

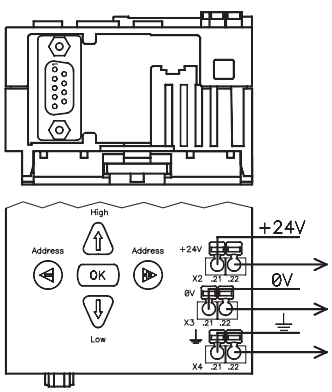

Interbus

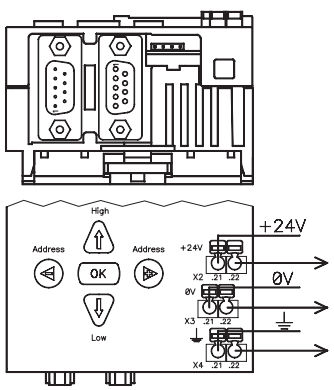

DeviceNet and CANopen

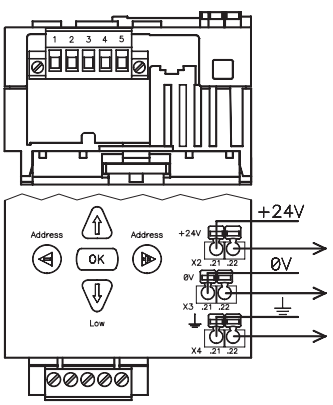

Ethernet

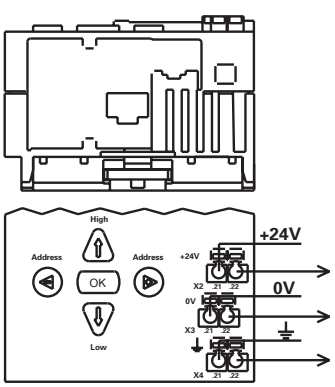

Wiring diagrams of economy Buscoupler

PROFIBUS DP

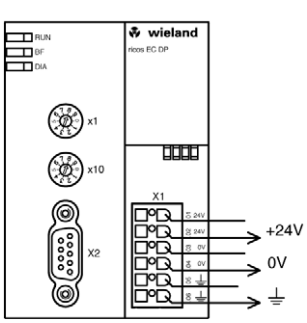

Interbus

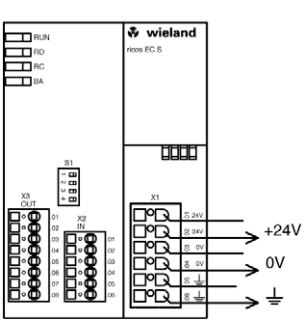

DeviceNet and CANopen

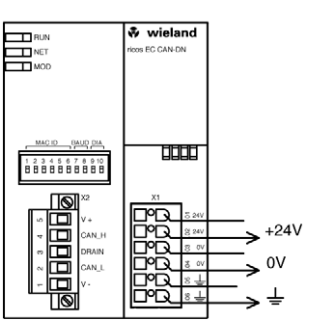

Specifications are subject to change without notice

ricos

Wiring diagrams of binary and compact modules

ricos 8I/O and *ricos* COM 8I/O

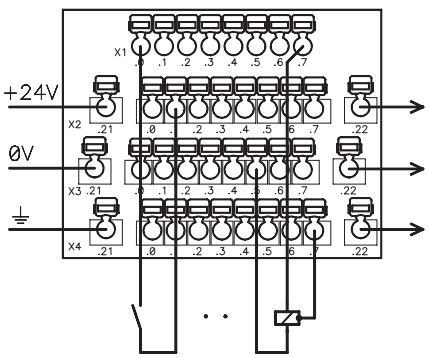

ricos 16I and *ricos* COM 16I

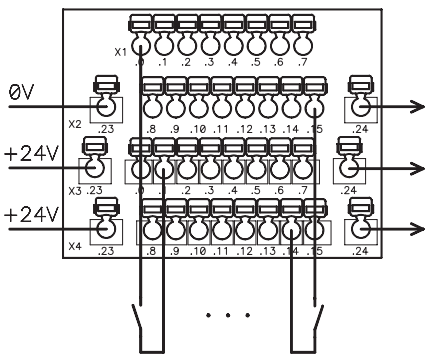

ricos COM-DP

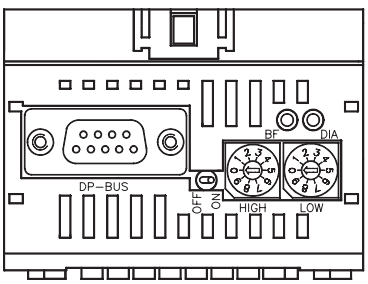

ricos 16O and *ricos* COM 16O

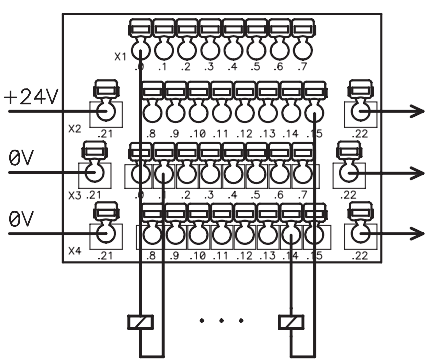

ricos 8I 8I/O and *ricos* COM 8I 8I/O

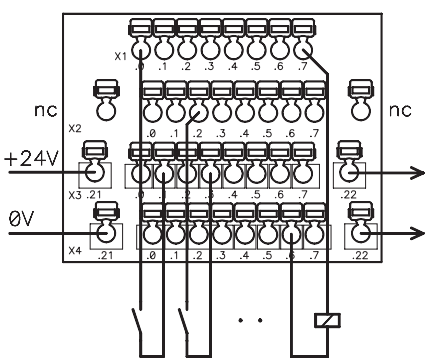

ricos COM-S

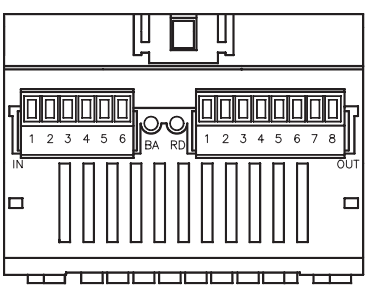

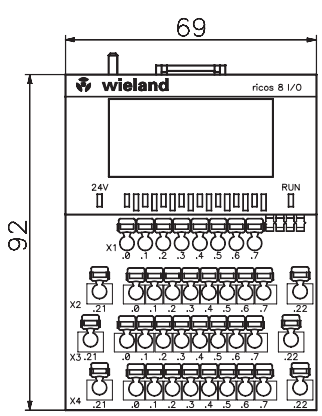

Derating

Total current

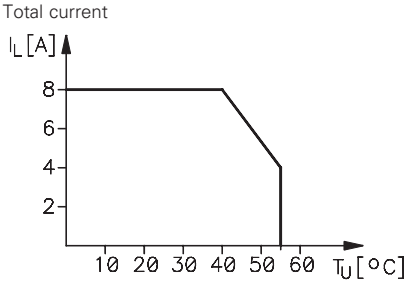

ricos COM CAN DN
ricos COM CANopen

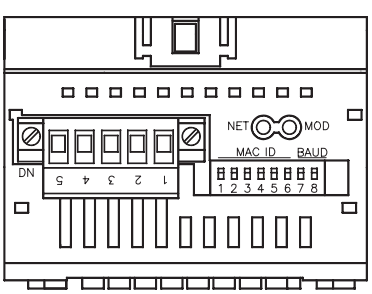

electronics

Wiring diagrams of binary modules

ricos 4I 115 V

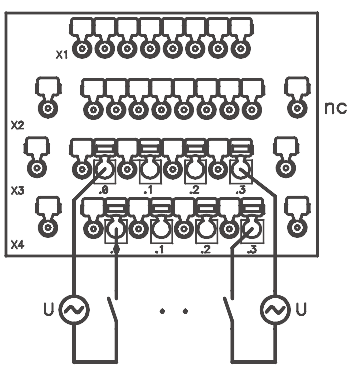

ricos 4I 230 V

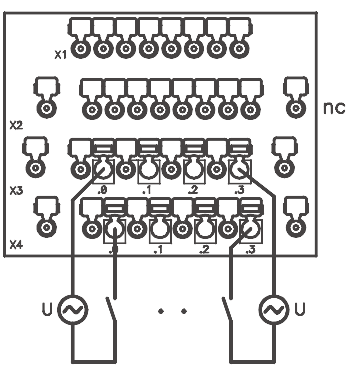

ricos 4O RELAY

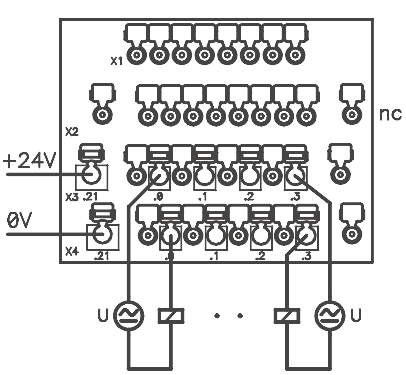

ricos 8O DC 2 A

in preparation

ricos 8O NEG

in preparation

Specifications are subject to change without notice

ricos

Wiring diagrams of analog modules

***ricos* 4AI/0...10 V**
***ricos* 4 AI/±10 V**
***ricos* 4AI/0...20 mA**

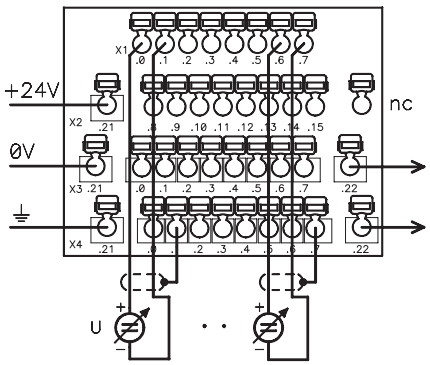

***ricos* 4AI4AO/0...10 V**
***ricos* 4AI4AO/±10 V**
***ricos* 4AI4AO/0...20 mA**
***ricos* 4AI4AO/4...20 mA**

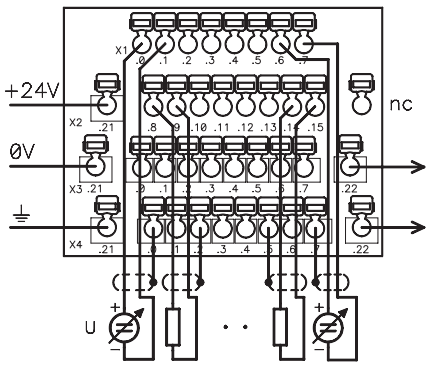

electronics

Wiring diagrams of the counter and positioning modules

ricos COUNTER

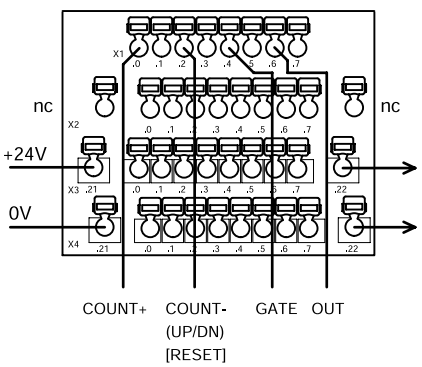

ricos POSITION

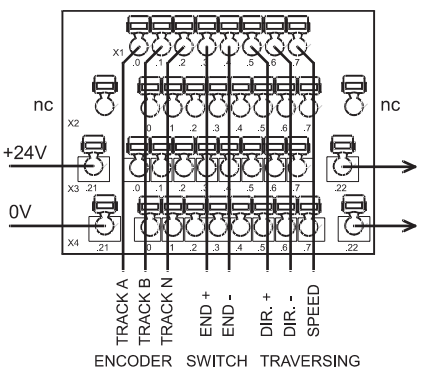

Wiring diagrams of the PT100 and TC modules

ricos 4AI Pt100

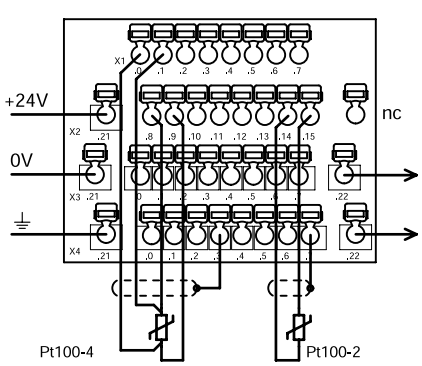

ricos 4AI TC

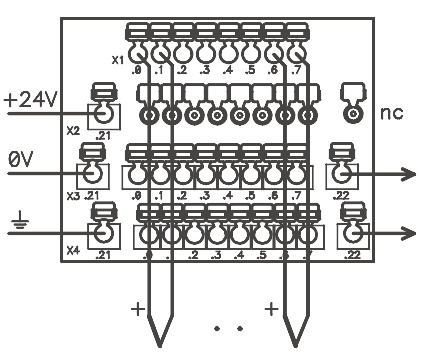

Specifications are subject to change without notice

ricos

ricos housing data

Material	Makrolon 2805, Lexan 161R, Polyamid 6.0 GF20
Colour	black
Flammability class	in accordance DIN VDE 0304 T3 (IEC 707) in accordance UL 94-V-2
Resistance to creepage	in accordance DIN VDE 0303 T1/06.84 CTI = 600
Thermal stability	in accordance DIN VDE 0304 20.000 h/5.000 h 100/115 °C
Electric strength	in accordance DIN VDE 0303 T2 (DIN 53481/>15 kV/mm)
Protection class	Class I in accordance IEC 536
Type of protection	IP20 in accordance EN 60529
Drop test	Height of fall (DIN IEC 68-2-32), with packaging
Shock resistance	in accordance IEC 68 Section 2, see "Drop test"
Relative humidity	10...95%, no moisture condensation
Air pressure during operation	860...1060 hPa
Insulation strip length of cables	10 mm
Opening in terminal compartment	2.4 x 1.5 mm in accordance IEC 999
Mounting rail	TS35
Weight	approx.190 g

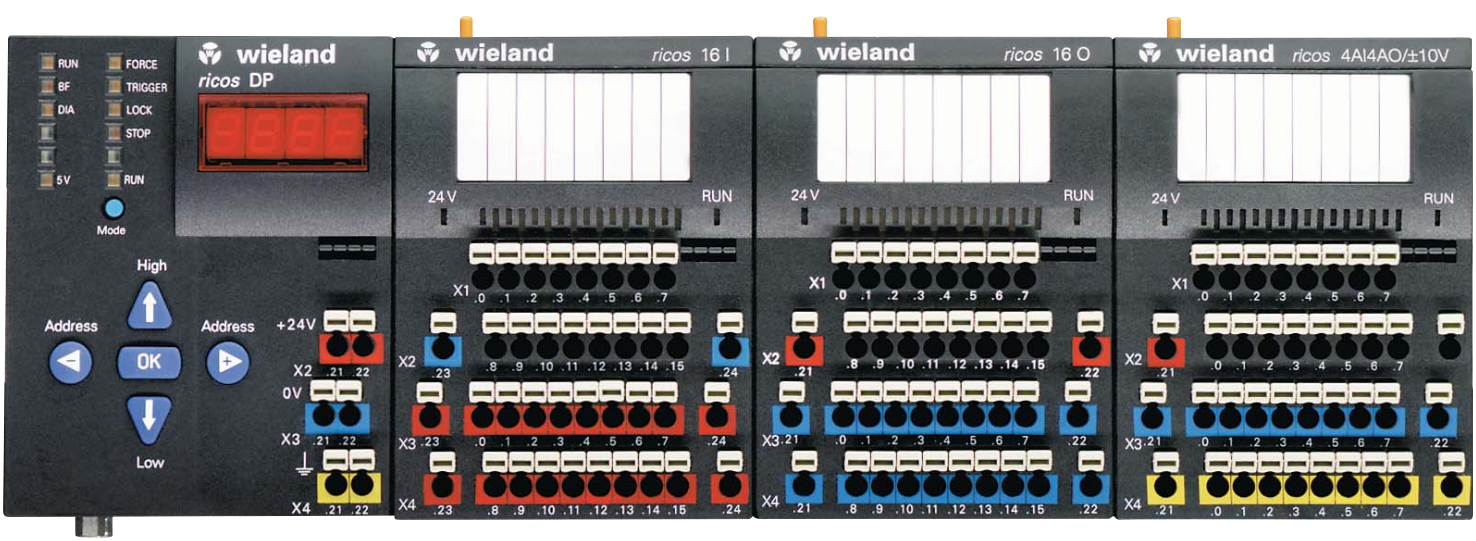

Relay modules

relais

Introduction to relay technology
Modular DIN rail mounted relays
Plug-in DIN rail mounted relays
Multiple chassis mounted relays
Timer relays

The relay modules offer features such as

- Overall width of 6,2 mm
- Screw or spring-clamp connection
- Separation into input or output relays
- Multipole relay modules
- 4 kV isolation at a creepage and clearance distance of 8 mm
- Timer relay with ON delay
- Multi function time relay
- Solid state relays

All Wieland Components which require CE general certification are CE certified, and identified with the CE logo.

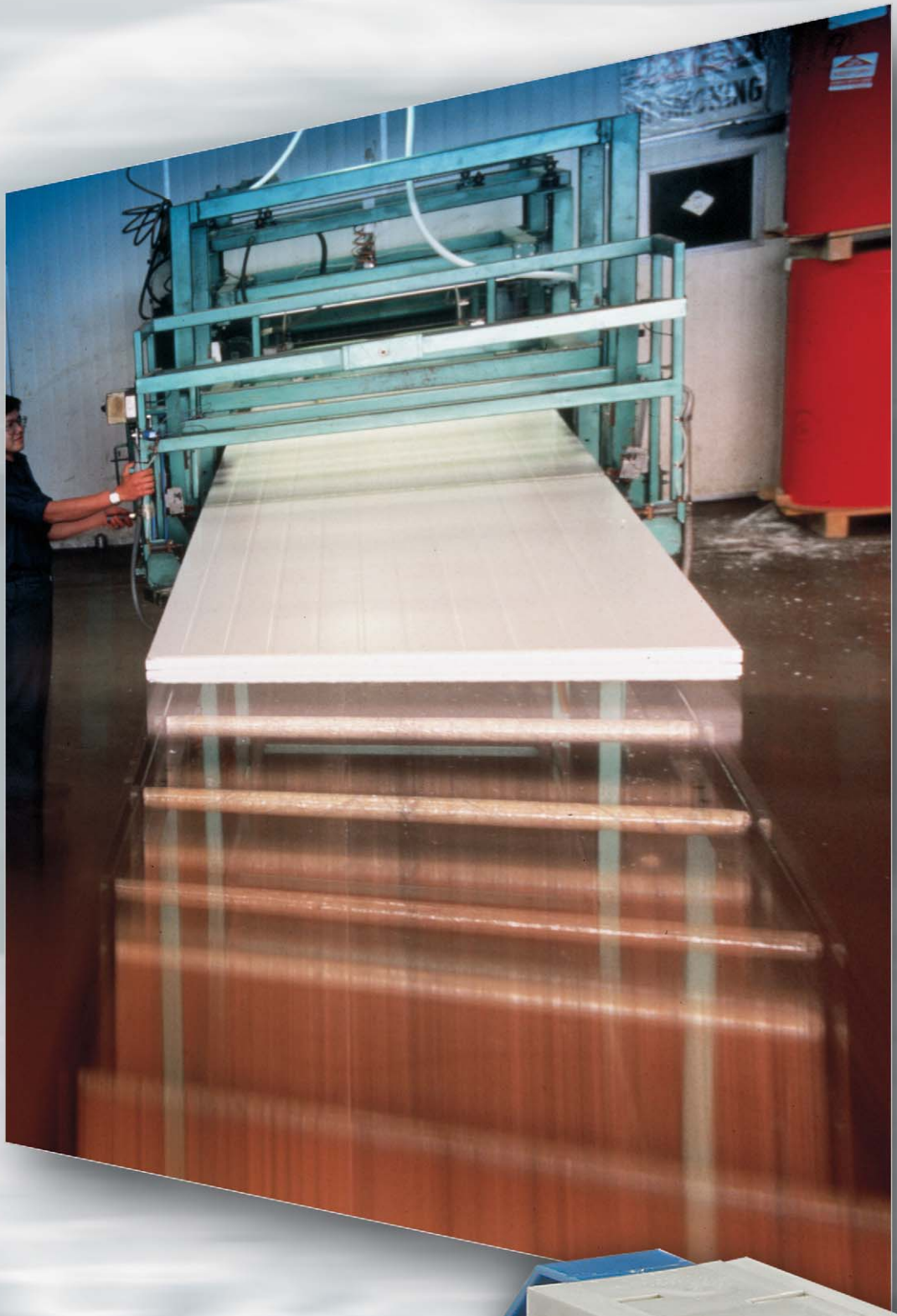

Electronic components

Relay modules

Relay modules

flare

Wieland relay modules – the reliable way to implement an application-related interface

In the microchip age, many believed that electromechanical relays would no longer play a role. This is however far from the truth. Switching relays have reliably carried out important tasks for many years, working in a "symbiotic relationship" with the electronics. Relays have demonstrated a high degree of flexibility over the years. The core characteristics have been maintained or even improved such as:

- ❒ Overload capability without costly protection measures
- ❒ Contact rating of µA up to >10 A
- ❒ Various types and number of the contacts
- ❒ High level of insensitivity to electrical interference
- ❒ Switching without dependence on the direction of current (AC/DC) up to the GHz range
- ❒ Low level of switching power loss
- ❒ Electrical isolation between all contacts and the coil

Wieland offers a complete range of relay modules with a combination of properties outlined above. Depending on the required applications, relay modules are available with various operating voltages, contact arrangements, contact materials and housing designs. Timer relays or HAND-0-AUTO relays can be supplied in addition to relays with pure monostable functionality.

Product range:

flare MOVE, Plug-in, process interface relay with an overall width of 6.2 mm

flare, Process interface relay / time relay with an overall width of 6.2 mm

WEG, Switching relay modules with an overall width up to 22.5 mm

WR, WRS, RAB, Multiple switching relay modules with mounting base

Overview of the technical data

Control side – operating voltage

Wieland relay modules can be controlled within a defined temperature range, given operating voltage and relevant tolerance band to a 100% duty cycle.

Control side – Suppression circuit

AC/DC relay modules are available. DC relays are equipped with a polarised diode and a free-wheeling diode in the input. These functions are taken over by a power rectifier in the case of AC or AC/DC modules. All relay modules have an LED for status display in the input circuit.

Suppression circuit of input for DC operation

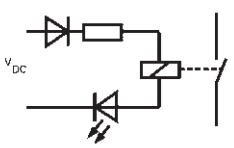

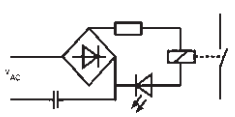

Suppression circuit of input for AC operation

Control side – residual voltage

To ensure the safe operation of the relay the residual voltage in the coil circuits must not exceed 5% DC and 15% AC of the operating voltage in accordance with VDE 0435. Values above this will result in the relay remaining closed after switch off.

Residual voltages can occur from semiconductor devices in circuit, induced voltages from high current cabling or other inductive or capacitive interference factors.

Corrective measures may involve the re-routing of cables away from interference or the parallel connection of RC elements.

Load side – contact material

The contacts are used to route control signals in a power range of mW up to more than 1000 VA. The contact material that is used is largely determined by the load expected during operation (particularly with regard to current carrying capacity, switching frequency, operating speed as well as any corrosive environmental influences). Wieland uses the universally accepted AgSnO contacts for power ranges up to 1500 VA. In the lower power range, the same material is used but with a gold-plated finish.

Modules with gold-flashed AgCu contacts, AgCdO or gold-plated AgNi contacts are also available. Table 1 gives an overview of other contact materials.

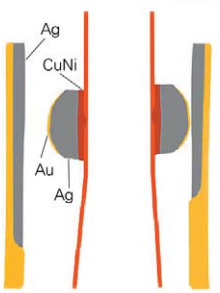

Cut-out of a 3-layer welded contact with a linear contact closure

Contact material	Attacked by		Typical properties	Typical applications	Scope
	Sulphur	Oxidisation			
Gold silver AuAg10	no	no	Low and constant contact resistance at minimum switching capacity	Dry switching circuits, measuring circuits, unfiltered communication routes	mV…60 V mA…300 mA
Gold nickel AuNi5	no	slightly	Free of material transfer in broad loading ranges, small contact resistance, slight electric arcs occur at low switching capacities, higher number of operations and greater contact follow-through, interference possible due to friction oxides	Used in low and medium voltage and current ranges	100 mV…60 V 1 mA…300 mA
Fine grained silver AgNi0,15	yes	no	Higher mechanical strength, low welding tendency and higher arc resistance than Ag, relatively smaller contact resistance	Universal use in medium-sized loads at higher voltage than gold nickel	>12 V 1 mA…1 A
Hard silver AgCu3	yes	when switching	Higher mechanical strength, low welding tendency and higher arc resistance than fine silver but a greater contact resistance	Used in medium-sized loads	>12 V 10 mA…10 A
Silver nickel AgNi10	yes	no	Higher arc resistance, low welding tendency, greater contact resistance	Switching circuits for medium to high loads, d.c. circuit	>17 V >5 mA
Silver cadmium Oxid AgCdO10	yes	no	Low welding tendency, high arc resistance at greater switching capacities	Particularly suitable for switching inductive loads	>12 V >100 mA
Silver tin oxide AgSnO10	yes	no	Low welding tendency, very high arc resistance at high switching capacities, low rate of material transfer	Switching circuits with high loads during opening and closing, d.c. circuits	>17 V >5 mA
AgNi0,15+ 5 µ Au	no	yes	Good corrosion properties, good contact resistance	Small switching capacities for dry circuits	µV…30 V µA…200 mA
AuAg10 over AgNi+Au	no	yes	Behaves as 5 m gold contact but its resistance to wear is five times greater	Switching capacity: 10^{-6} W / VA up to 100 W / 1 kVA	> 100 mV > 10 µA

Table 1: Overview of contact materials

Contact side – reduction of arcs

When the arc limit voltage (see diagram) which is dependent on the switching current and contact material is exceeded, discharge processes take place on the relay contact. Material transfer occurs which damages the contact. To achieve a long service life and a high level of reliability despite this type of contact loading, circuit elements are required for arc suppression. Several options are available.

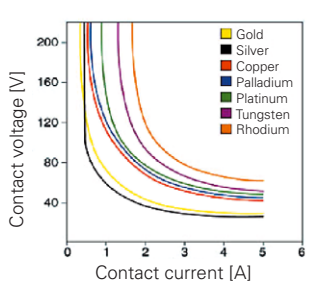

Arc limit of pure contact metals

D.C. circuits with a resistive load

An RC element which is connected in parallel to the contact can be used for arc suppression.

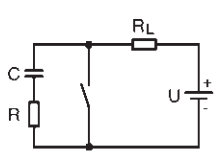

RC element parallel

At the point of disconnection, the voltage Uc at the contact jumps from zero to the value UxR/(R+R_L) and then rises according to the function U_c=U (1-$e^{-t/T}$) whereby t=(R+R_L) x C. The resistance R must be high enough so that the combined total of the condenser discharge current and the switching current at start-up is less than the maximum permitted starting current.

R>U / (I_{zul}U/R)

At a switching frequency 1/T, the capacitor should have discharged its load again before the contact is reopened. This is essentially guaranteed if **C<T/2R** has been selected.

D.C. circuits with an inductive load

While the maximum switching voltage U is applied when a resistive load is present at the contact, voltage peaks that are approximately 10 times as high can occur in the case of an inductive load.

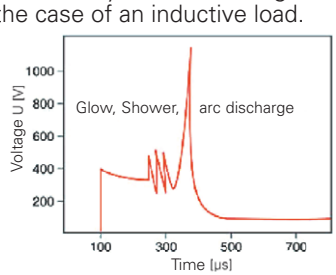

Voltage characteristics at the relay contact for inductive loads

To avoid harmful discharge processes, it is necessary to prevent a sudden disruption in the flow of current and simultaneously ensure that the voltage rise at the contact, which is limited by the degradation of the magnetic field, takes place at a slower rate than the opening of the contact. This counteracts the occurrence of a discharge process and an air gap is therefore created as quickly as possible after the opening of the contact whose igniting voltage far exceeds the voltage building up at the contacts. An RC element which lies parallel to the contact can also be used for this purpose.

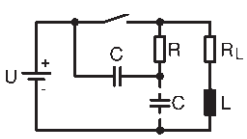

RC element for inductive load

When the contact opens, a charging current which is subsiding after an e function, flows into the capacitor. This slows down the absorption of the current that is flowing through the inductor and the peak value of the voltage at the contact is simultaneously reduced. The following serves as a practical, approximate value for the rating of the capacitor

C (μF) ≅ I²/10 (A)

where **I** represents the respective switching current. The resistance must be rated so that the combined total of the capacitor discharge current and the switching current is again less than the permitted starting current.

Another possibility is the parallel connection of an RC element to the load itself (see diagram above). This protective measure is equally effective. The disadvantage of both arrangements is the use of relatively large and therefore expensive capacitors.

RC circuit for a.c. load

A VDR resistor (Voltage Dependent Resistor) or varistor can be connected in parallel to the load in this application in order to protect the contact. The resistance of this component is low for high voltage levels and high for low voltage levels. Varistors are therefore extremely suitable for the suppression of arcs in a.c. circuits. Table 2 gives an overview of further possibilities for arc suppression.

Protective circuit for load	Additional dropout delay	Defined limit for induced voltage	Bipolar attenuation	Benefits / Disadvantages
Diode	long	yes (UD)	no	**Benefits:** Simple implementation Cost effective Reliable Non-critical dimensioning Small induced voltage **Disadvantages:** Attenuation only via load resistance Long dropout delay
Series-connected diode / Zener diode	medium to short	yes (U_{ZD})	no	**Benefit:** Non-critical dimensioning **Disadvantage:** Attenuation only above U_{ZD}
Suppressor diode	medium to short	yes (U_{ZD})	yes	**Benefits:** Cost effective Non-critical dimensioning Suitable for AC voltage Limit of positive peaks **Disadvantage:** Attenuation only above U_{ZD}
Varistor	medium to short	yes (U_{VDR})	yes	**Benefits:** High absorption of energy Non-critical dimensioning Suitable for AC voltage **Disadvantage:** Attenuation only above U_{VDR}
RC Combination	medium to short	no	yes	**Benefits:** HF attenuation of stored energy Suitable for AC voltage Attenuation is not dependent on the level **Disadvantages:** Exact values required High inrush current Sensitive to harmonic waves

Table 2: Overview of protective measures on the switch output

Diode:

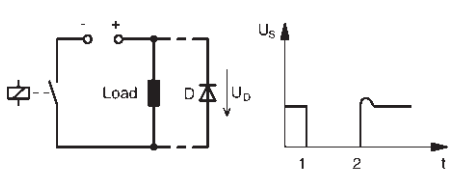

Benefit: Can be used for all capacities, low overvoltage, compact, cost-effective

Disadvantage: Very high resetting time

Varistor:

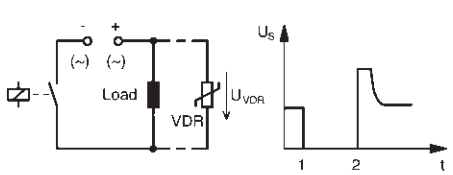

Benefit: Low resetting time, cost-effective

Disadvantage: Cannot be used for all operating voltages and capacities

Diode and Zener diode:

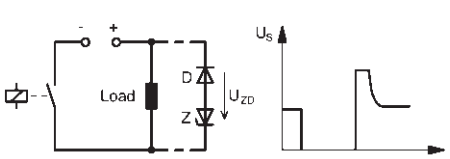

Benefit: Low overvoltage (defined by Zener diode), low resetting time

Disadvantage: Cannot be used for large capacities

RC combination:

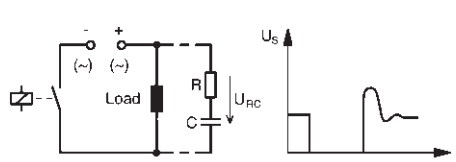

Benefit: Low overvoltage, low resetting time

Disadvantage: High current loading of the contacts at start-up, more costly and time-consuming with increased capacity

Endurance

A distinction is made in relay modules between mechanical and electrical endurance. The mechanical endurance defines the maximum number of operating cycles without contact loading while the electrical endurance describes the switching frequency at a maximum switching capacity for resistive load. A low switching capacity increases these values considerably. The following diagram indicates the typical waveform between the switching current and endurance of a relay. Figures for each relay module is shown on the relevent catalogue data page.

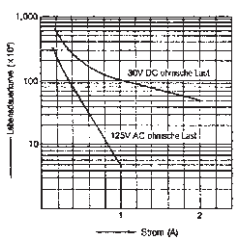

Typical endurance curve of a relay

Safety separation – VDE 0106

The safety separation of coupled switching circuits in the relay modules means that the isolating voltage between the control and load circuit is retained even in the event of a mechanical failure (bent soldered pin, broken coil winding or spring). When using solid-state relays or electronic relays, this requirement is met using double or reinforced insulation. The norms DIN 50178, VDE 0106 and 109 form the basis for safety separation. VDE 0884 also applies to solid-state relays.

All Wieland modules meet these requirements.

Timer relay modules

Wieland timer relays are electromechanical relays with an integrated time response. The time response is defined according to VDE 0435 section 201/5.83. The respective time range is either fixed or set via a DIP switch depending on the type. Fine-tuning within the time range can also be carried out via a potentiometer. An integrated LED indicates the switching state of the relay.

Definition of the time response

On delay

Operating voltage is applied; the relay switches to operating position after a set delay.

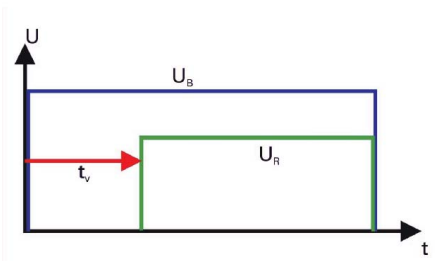

Operating voltage is applied; the relay remains in normal position

Off delay with control voltage

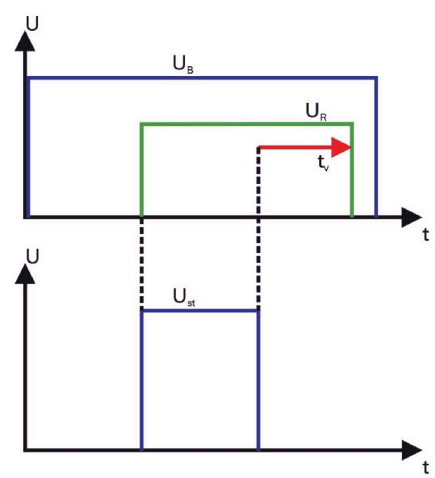

Control voltage is applied; the relay switches to operating position

Control voltage is interrupted; time delay is activated; the relay drops out after the period has elapsed.

Single Shot

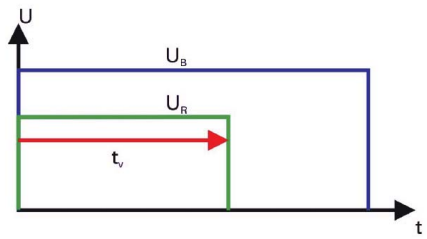

Operating voltage is applied; the relay switches to operating position and drops out after the set period

Cycle On – "pulsing"

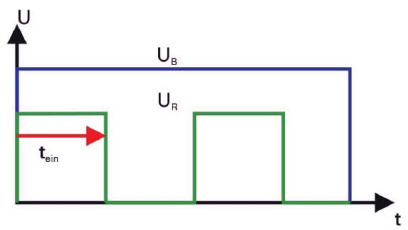

Operating voltage is applied; relay starts clock pulse operation over the set period; relationship between pulse and pause is 1:1

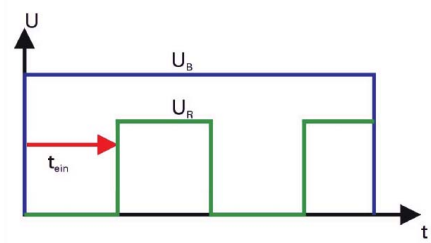

Cycle Off – "pulsing delay"

Operating voltage is applied; relay starts clock pause operation over the set period; relationship between pulse and pause is 1:1

Relay modules

flare

Overall width 6.2 mm
Screw or spring clamp terminal
can be selected

Dimensions (mm): W x H x D
6.2 x 89 x 70

250 V AC / 300 V DC, 6 A
1 Changeover contact (SPDT)
Approvals: UL, CSA

48 V DC, 20 mA
1 Changeover contact (SPDT)
Approvals: UL, CSA

Operating voltage	Screw terminal	Spring-clamp	Std. pack	Screw terminal	Spring-clamp	Std. pack
12 V DC		80.010.4106.0	10			
24 V DC	80.010.4000.0	80.010.4100.0	10			
12 V AC/DC						
24 V AC/DC				80.010.4005.0	80.010.4105.0	10
115 V AC		80.010.4131.0	10			
230 V AC		80.010.4141.0	10			
Wiring diagram, derating curve, limit curve	**See pages 464-465**			**See pages 464-465**		
Coil circuit						
Operating voltage	**12 V DC**	**24 V DC**	**115 V DC**	**230 V DC**		
Range of voltage	UB +25 %/–20 %				UB +25 %/–20 %	
Nominal input current	18 mA	ca. 14 mA	3.9 mA	3 mA	ca. 14 mA	
Nominal input capacity	0.22 W	ca. 0.35 W	0.48 W	0.65 W	ca. 0.35 W	
Holding current at 20 °C	≥ 2.3 mA	> 1.2 mA	≥ 0.6 mA	≥ 0.3 mA	> 1.2 mA	
Connectable via plug-in jumper	Up to 50 modules				Up to 50 modules	
Status display	LED Green				LED Green	
Switching characteristics						
Maximum switching voltage	250 V AC / 300 V DC				48 V DC	
Maximum switching current	6 A AC / 2 A DC				20 mA	
Maximum switching capacity	1500 VA / 48 W				1 W	
Maximum starting current	10 A; 4 sec.					
Pickup/dropout delay	8 ms / 10 ms				8 ms / 10 ms	
Chatter time	2 ms				2 ms	
Maximum switching frequency	20 Hz				20 Hz	
Contact material	$AgSnO_2$				$AgSnO_2$ + 3µ Au	
Minimum switchable voltage	12 V				5 V	
Minimum switchable current	5 mA				1 mA	
Mechanical endurance	2×10^7				2×10^7	
Electrical endurance 24 V DC / 2 A	6×10^5				6×10^5	
Electrical endurance 230 V AC / 6 A	8×10^4				8×10^4	
Rated voltage						
Isolation voltage of input/output	4 $kV_{eff.}$				4 $kV_{eff.}$	
Overvoltage category	III (according to HD 625.1S1)				III (according to HD 625.1S1)	
Degree of pollution	2 (according to HD 625.1S1)				2 (according to HD 625.1S1)	
Ambient temperature	0 °C...+50 °C				0 °C...+50 °C	
Storage temperature	–40 °C...+55 °C				–40 °C...+55 °C	
Protection type/mounting rail	IP 20 / TS35				IP 20 / TS35	
Norms/specifications	VDE 0160; VDE 0106 T101				VDE 0160; VDE 0106 T101	
Emitted interference/interference immunity	EN 61000-6-3; EN 61000-6-2				EN 61000-6-3; EN 61000-6-2	
Wire range of screw terminal/spring clamp terminal	24 – 10 AWG / 24 – 12 AWG				24 – 10 AWG / 24 – 12 AWG	
finely stranded	0.14 mm^2 – 1.5 mm^2				0.14 mm^2 – 1.5 mm^2	
single core	0.5 mm^2 – 2.5 mm^2				0.5 mm^2 – 2.5 mm^2	
CSA EX approval	Class I, Division 2, Groups A, B, C and D, T6				Class I, Division 2, Groups A, B, C and D, T6	
Accessories						
Plug-in jumper (U_{max} = 50 V, I_{max} = 2 A)	Z8.000.0200.8				Z8.000.0200.8	
8 digit marker tag, unmarked, 60 off	Z4.242.5153.0				Z4.242.5153.0	
Comb for potential distribution, red/blue*	Z8.000.0202.3 / Z8.000.0202.4				Z8.000.0202.3 / Z8.000.0202.4	
End caps for comb red/blue	Z8.000.0202.1 / Z8.000.0202.2				Z8.000.0202.1 / Z8.000.0202.2	
* for screw terminals only						

Subject to change without further notice

flare

Overall width 12.4 mm
Spring clamp

Dimensions (mm): W x H x D
6.2 x 89 x 70

250 V AC / 300 V DC, 6 A (DPDT)
2 Changeover contacts
Approvals: UL, CSA

Operating voltage	Screw terminal	Spring-clamp	Std. pack
12 V DC			
24 V DC		80.010.4103.0	10
12 V AC/DC			
24 V AC/DC			
115 V AC			
230 V AC			
Wiring diagram, derating curve, limit curve	**See pages 464-465**		
Coil circuit			
Operating voltage	UB +25 %/–20 %		
Nominal input current	ca. 14 mA		
Nominal input capacity	ca. 0.35 W		
Holding current at 20 °C	> 1.2 mA		
Connectable via plug-in jumper	Up to 50 modules		
Status display	LED Green		
Switching characteristics			
Maximum switching voltage	250 V AC / 300 V DC		
Maximum switching current	6 A AC / 2 A DC		
Maximum switching capacity	1500 VA / 48 W		
Maximum starting current	10 A; 4 sec.		
Pickup/dropout delay	8 ms / 10 ms		
Chatter time	2 ms		
Maximum switching frequency	20 Hz		
Contact material	$AgSnO_2$		
Minimum switchable voltage	24 V		
Minimum switchable current	5 mA		
Mechanical endurance	2×10^7		
Electrical endurance 24 V DC / 2 A	6×10^5		
Electrical endurance 230 V AC / 6 A	8×10^4		
Rated voltage			
Isolation voltage of input/output	4 $kV_{eff.}$		
overvoltage category	III (according to HD 625.1S1)		
Degree of pollution	2 (according to HD 625.1S1)		
Ambient temperature	0 °C...+50 °C		
Storage temperature	–40 °C...+55 °C		
Protection type/mounting rail	IP 20 / TS35		
Norms/specifications	VDE 0160; VDE 0106 T101		
Emitted interference/interference immunity	EN 61000-6-3; EN 61000-6-2		
Wire range of screw terminal/spring clamp terminal	24 – 10 AWG / 24 – 12 AWG		
finely stranded	0.14 mm^2 – 1.5 mm^2		
single core	0.5 mm^2 – 2.5 mm^2		
Accessories			
Plug-in jumper (U_{max} = 50 V, I_{max} = 2 A)		Z8.000.0200.8	
8 digit marker tag, unmarked, 60 off		Z4.242.5153.0	

electronics

Relay modules
Plug-in relays
flare MOVE

Overall width: 6.2 mm
plug-in relay, screw clamp

Dimensions (mm): W x H x D
6.2 x 88 x 76

	Coil voltage 12 V DC / Output 250 V AC / 6 A /1 Changeover contact (SPDT)		**Coil voltage 24 V DC/ Output 250 V AC / 6 A/1 Changeover contact (SPDT)**	
Operating voltage	$AgSnO_2$	$AgSnO_2$ + Au (5 µ)VPE	$AgSnO_2$	$AgSnO_2$ + Au (5 µ) VPE
12 V DC Relays c/w Base	80.010.4501.0	80.010.4501.1 10		
24 V DC Relays c/w Base			80.010.4502.0	80.010.4502.1 10
Coil circuit (identical for both types of contact material)				
Nominal operating voltage	12 V DC	12 V AC/DC	24 V DC	24 V AC/DC
Maximum operating voltage	16.8 V DC	16.8 V DC	33.6 V DC	33.6 V DC
Minimum operating voltage	8.4 V DC	9.1 V DC	16.8 V DC	18.2 V DC
Nominal input current	15.2 mA	15.2 mA	9.4 mA	9.4 mA
Nominal input capacity AC/DC	0.2 W	0.25 VA	0.23 W	0.3 VA
Operating range	(0.7...2.2) U_N	(0.85...1.1) U_N	(0.7...2.2) U_N	(0.85...1.1) U_N
Connectable via plug-in jumper	Up to 20 modules		Up to 20 modules	
Status display	LED Green		LED Green	
Switching characteristics	**$AgSnO_2$**	**$AgSnO_2$ + Au (5 µ)**	**$AgSnO_2$**	**$AgSnO_2$ + Au (5 µ)**
Maximum switching voltage	400 V AC		400 V AC	
Nominal switching voltage	250 V AC		250 V AC	
Maximum switching current		6 A AC/DC		6 A AC/DC
Maximum switching capacity		1500 VA / 150 W		1500 VA / 150 W
Maximum starting current		30 A (0.5 sec.)		30 A (0,5 sec.)
Pickup/dropout delay (including chatter)	7 ms / 11 ms		7 ms / 11 ms	
Maximum switching frequency	20 Hz (without load); 0,1 Hz (at full load)		20 Hz (without load); 0.1 Hz (at full load)	
Contact material	$AgSnO_2$	$AgSnO_2$ + Au (5 µm)	$AgSnO_2$	$AgSnO_2$ + Au (5 µm)
Minimum switchable voltage	12 V AC/DC	5 V AC/DC	12 V AC/DC	5 V AC/DC
Minimum switchable current	10 mA AC/DC	2 mA AC/DC	10 mA AC/DC	2 mA AC/DC
Minimum switching capacity	500 mW	50 mW	500 mW	50 mW
Mechanical endurance	1×10^7		1×10^7	
Electrical endurance 230 V AC / 6 A	6×10^4		6×10^4	
Rated voltage	250 V		250 V	
Isolation voltage of input/output	4 $kV_{eff.}$		4 $kV_{eff.}$	
Overvoltage category	III (according to HD 625.1S1)		III (according to HD 625.1S1)	
Degree of pollution	2 (according to HD 625.1S1)		2 (according to HD 625.1S1)	
Ambient temperature	0 °C...+50 °C		0 °C...+50 °C	
Storage temperature	-40 °C...+55 °C		–40 °C...+55 °C	
Protection type/mounting rail	IP 20 / TS35		IP 20 / TS35	
Norms/specifications				
Wire range of screw terminal:	24 – 12 AWG		24 – 12 AWG	
finely stranded/single core	0.14 mm^2–1.5 mm^2 / 0.5 mm^2–2.5 mm^2		0.14 mm^2–1.5 mm^2 / 0.5 mm^2–2.5 mm^2	
Accessories	**Relay type**	Part no. Std. pack	**Relay-Type**	Part no. Std. pack
Relay 12 V DC	$AgSnO_2$	80.063.4031.0 10	$AgSnO_2$	80.063.4031.0 10
Relay 12 V DC	$AgSnO_2$ + Au (5 µ)	80.063.4031.1 10	$AgSnO_2$ + Au (5 µ)	80.063.4031.1 10
Relay 24 V DC	$AgSnO_2$	80.063.4032.0 10	$AgSnO_2$	80.063.4032.0 10
Relay 24 V DC	$AgSnO_2$ + Au (5 µ)	80.063.4032.1 10	$AgSnO_2$ + Au (5 µ)	80.063.4032.1 10
Insulating plate	IP SF38	80.063.4009.1	IP SF38	80.063.4009.1
Comb-shaped jumper, continuous current 36 A	KB SF38	80.063.4029.3	KB SF38	80.063.4029.3
Marker tag (plastic, white)	BZ SF38	80.063.4029.3	BZ SF38	80.063.4029.3
Labelling mat	BM SF38	80.063.4129.3	BM SF38	80.063.4129.3

Subject to change without further notice

flare MOVE

Overall width: 6.2 mm
plug-in relay, screw clamp

Dimensions (mm): W x H x D
6.2 x 88 x 76

	Coil voltage 110 V AC/DC / Output 250 V AC / 6 A /1 Changeover contact (SPDT)		Coil voltage 230 V AC/DC/Output 250 V AC / 6 A/1 Changeover contact (SPDT)	
Operating voltage	$AgSnO_2$	$AgSnO_2$ + Au (5 µ)	$AgSnO_2$	$AgSnO_2$ + Au (5 µ)
110 V AC/DC Relay c/w Base	80.010.4525.0	80.010.4525.1		
230 V AC/DC Relay c/w Base			80.010.4526.0	80.010.4526.1
Coil circuit				
Nominal operating voltage	110 V AC/DC (50/60 Hz)		230 V AC/DC (50/60 Hz)	
Maximum operating voltage	132 V AC		255 V AC	
Minimum operating voltage	83.5 V AC		175 V AC	
Nominal input current	3.1 mA		3.1 mA	
Nominal input capacity AC/DC	0.6 VA		0,9 VA	
Operating range	(0.85...1.1) U_N		(0.85...1.1) U_N	
Connectable via a plug-in jumper	Up to 20 modules		Up to 20 modules	
Status display	LED Green		LED Green	
Switching characteristics	**$AgSnO_2$**	**$AgSnO_2$ + Au (5 µ)**	**$AgSnO_2$**	**$AgSnO_2$ + Au (5 µ)**
Maximum switching voltage	400 V AC		400 V AC	
Nominal switching voltage	250 V AC		250 V AC	
Maximum switching current		6 A AC/DC		6 A AC/DC
Maximum switching capacity		1500 VA / 150 W		1500 VA / 150 W
Maximum starting current		30 A (0.5 sec.)		30 A (0.5 sec.)
Pickup/dropout delay (including chatter)	7 ms / 11 ms		7 ms / 11 ms	
Maximum switching frequency	20 Hz (without load); 0.1 Hz (at full load)		20 Hz (without load); 0.1 Hz (at full load)	
Contact material	$AgSnO_2$	$AgSnO_2$ + Au (5 µm)	$AgSnO_2$	$AgSnO_2$ + Au (5 µm)
Minimum switchable voltage	12 V AC/DC	5 V AC/DC	12 V AC/DC	5 V AC/DC
Minimum switchable current	10 mA AC/DC	2 mA AC/DC	10 mA AC/DC	2 mA AC/DC
Minimum switching capacity	500 mW	50 mW	500 mW	50 mW
Mechanical endurance	1×10^7		1×10^7	
Electrical endurance 230 V AC / 6 A	6×10^4		6×10^4	
Rated voltage	250 V		250 V	
Isolation voltage of input/output	4 $kV_{eff.}$		4 $kV_{eff.}$	
Overvoltage category	III (according to HD 625.1S1)		III (according to HD 625.1S1)	
Degree of pollution	2 (according to HD 625.1S1)		2 (according to HD 625.1S1)	
Ambient temperature	0 °C...+50 °C		0 °C...+50 °C	
Storage temperature	–40 °C...+55 °C		–40 °C...+55 °C	
Protection type/mounting rail	IP 20 / TS35		IP 20 / TS35	
Norms/specifications				
Wire range of screw terminal:				
finely stranded/single core	0.14 mm^2 – 1.5 mm^2 / 0.5 mm^2 – 2.5 mm^2 24 – 12 AWG		0.14 mm^2 – 1.5 mm^2 / 0.5 mm^2 – 2.5 mm^2 24 – 12 AWG	
Accessories	**Relay-Type**	Part no. Std. pack	**Relay-Type**	Part no. Std. pack
Relay 110 V AC/DC	$AgSnO_2$	80.063.4034.0 10	$AgSnO_2$	80.063.4034.0 10
Relay 110 V AC/DC	$AgSnO_2$ + Au (5 µ)	80.063.4034.1 10	$AgSnO_2$ + Au (5 µ)	80.063.4034.1 10
Relay 230 V AC/DC	$AgSnO_2$	80.063.4026.0 10	$AgSnO_2$	80.063.4026.0 10
Relay 230 V AC/DC	$AgSnO_2$ + Au (5 µ)	80.063.4026.1 10	$AgSnO_2$ + Au (5 µ)	80.063.4026.1 10
Insulating plate	IP SF38	80.063.4009.1	IP SF38	80.063.4009.1
Comb-shaped jumper, continuous current 36 A	KB SF38	80.063.4029.3	KB SF38	80.063.4029.3
Marker tag (plastic, white)	BZ SF38	80.063.4029.3	BZ SF38	80.063.4029.3
Labelling mat	BM SF38	80.063.4129.3	BM SF38	80.063.4129.3

Relay modules

flare

Overall width 6.2 mm
For input/output seperation

Dimensions (mm): W x H x D
6.2 x 89 x 70

	Isolating blade terminal relay (SPDT) Change over 1 contact Approvals: Ⓤ,CSA			**Hand-O-Auto relay (SPDT) 1 make contact** Approvals: : Ⓤ, CSA		
Operating voltage	Screw terminal	Spring-clamp	Std. pack	Screw terminal	Spring-clamp	Std. pack
12 V DC						
24 V DC						
12 V AC/DC						
24 V AC/DC		80.010.4120.0	10		80.010.4101.0	10
115 V AC						
230 V AC						
Wiring diagram, derating curve, limit curve	**See pages 464-465**			**See pages 464-465**		
Coil circuit						
Operating voltage	UB +25 %/–20 %			UB +25 %/–20 %		
Nominal input current	ca. 14 mA			ca. 14 mA		
Nominal input capacity	ca. 0.35 W			ca. 0.35 W		
Holding current at 20 °C	> 1.2 mA			> 1.2 mA		
Connectable via plug-in jumper	Up to 50 modules			Up to 50 modules		
Status display	LED Green			LED Green		
Switching characteristics						
Maximum switching voltage	250 V AC / 300 V DC			250 V AC / 300 V DC		
Maximum switching current	6 A AC / 2 A DC			6 A AC / 2 A DC		
Maximum switching capacity	1500 VA / 48 W			1500 VA / 48 W		
Maximum starting current	10 A; 4 sec.			10 A; 4 sec.		
Pickup/dropout delay	8 ms / 10 ms			8 ms / 10 ms		
Chatter time	2 ms			2 ms		
Maximum switching frequency	20 Hz			20 Hz		
Contact material	$AgSnO_2$			$AgSnO_2$		
Minimum switchable voltage	12 V			12 V		
Minimum switchable current	5 mA			5 mA		
Mechanical endurance	2×10^7			2×10^7		
Electrical endurance 24 V DC / 2 A	6×10^5			6×10^5		
Electrical endurance 230 V AC / 6 A	8×10^4			8×10^4		
Rated voltage						
Isolation voltage of input/output	4 $kV_{eff.}$			4 $kV_{eff.}$		
Overvoltage category	III (according to HD 625.1S1)			III (according to HD 625.1S1)		
Degree of pollution	2 (according to HD 625.1S1)			2 (according to HD 625.1S1)		
Ambient temperature	0 °C...+50 °C			0 °C...+50 °C		
Storage temperature	–40 °C...+55 °C			–40 °C...+55 °C		
Protection type/mounting rail	IP 20 / TS35			IP 20 / TS35		
Norms/specifications	VDE 0160; VDE 0106 T101			VDE 0160; VDE 0106 T101		
Emitted interference/interference immunity	EN 61000-6-3; EN 61000-6-2			EN 61000-6-3; EN 61000-6-2		
Wire range of screw terminal	–			–		
Wire range of spring clamp terminal	24 – 12 AWG			24 – 12 AWG		
finely stranded	0.14 mm^2 – 1.5 mm^2			0.14 mm^2 – 1.5 mm^2		
single core	0.5 mm^2 – 2.5 mm^2			0.5 mm^2 – 2.5 mm^2		
CSA EX approval in range	Class I, Division 2, Groups A, B, C and D, T6			Class I, Division 2, Groups A, B, C and D, T6		
Accessories						
Plug-in jumper ($U_{max.}$ = 50 V, $I_{max.}$ = 2 A)	Z8.000.0200.8			Z8.000.0200.8		
8 digit marker tag, unmarked, 60 off	Z4.242.5153.0			Z4.242.5153.0		
Comb for potential distribution, red/blue	Z8.000.0202.3 / Z8.000.0202.4			Z8.000.0202.3 / Z8.000.0202.4		
End caps for comb, red/blue	Z8.000.0202.1 / Z8.000.0202.2			Z8.000.0202.1 / Z8.000.0202.2		

Subject to change without further notice

Relay modules
Operating voltage: 24 V / 48 V

WEG

Overall width 20mm & 22.5mm
Screw clamp

250 V AC / 125 V DC, 3 A (SPST, N.O.)
1 Make contact

250 V AC / 250 V DC, 5 A (SPDT)
1 Changeover contact
Approvals:

Dimensions (mm): W x H x D

22.5 x 58 x 90.5

Operating voltage	Type	Part no.	Std. pack	Type	Part no.	Std. pack
24 V AC/DC	WEG-REL-1S-250V3A	57.800.0053.0	1	WEG-REL-1W-250V5A	57.800.5053.0	1
48 V AC/DC				WEG-REL-1W-250V5A	57.800.5053.0	1
115 V AC/DC						
230 V AC						
Wiring diagram, derating curve, limit curve	**See pages 466-467**			**See pages 466-467**		
Coil circuit						
Operating voltage	22 V AC/DC			24 V AC/DC ±10%	48 V AC/DC ±10%	
Nominal input current	22 mA AC / 14 mA DC			27 mA AC / 17 mA DC	21 mA AC / 18 mA DC	
Nominal input capacity	0.54 VA / 0.34 W			0.65 VA / 0,4 W	1.0 VA / 0,85 W	
Holding current at 20 °C	5.5 mA AC / 2.6 mA DC			7.4 mA AC / 3.5 mA DC	5.7 mA AC / 3.5 mA DC	
Switching characteristics						
Maximum switching voltage	250 V AC / 125 V DC[1)]			250 V AC / 250 V DC[1)]		
Maximum starting current	3 A AC/DC[1)]			5 A AC/DC[1)]		
Maximum switching capacity	1200 V A / 120 W[1)]			2000 V A / 100 W[1)]		
Maximum continous current	16 A (25 ms)			16 A AC (max. 4 s, 10% ED)		
Pickup/dropout delay approx.	8.5 ms / 16 ms			9.4 ms / 17.6 ms		
Chatter time	2 ms			3 ms		
Maximum switching frequency						
Contact material	AgNi 0,15 + 1 µ Au			AgNi 0.15 + 0.2 µ Au		
Minimum switchable voltage	80 mV			12 V DC		
Minimum switchable current	50 µA			10 mA		
Mechanical endurance	> 20 x 10^6			> 20 x 10^6		
Electrical endurance at 24 V DC / 1 A	> 6 x 10^5			> 6 x 10^6		
Electrical endurance at 230 V AC / 3 A	> 1 x 10^5			> 7 x 10^5		
Rated voltage						
Isolation voltage of input/output	2 $kV_{eff.}$			2 $kV_{eff.}$		
Overvoltage category						
Degree of pollution						
Ambient temperature	–25 °C...Derating			–25 °C...Derating		
Storage temperature	–40 °C...+85°C			–40 °C...+85°C		
Protection type/mounting rail	IP 20/TS 32 or TS35			IP 20/TS 32 or TS 35		
Norms/specifications						
Emitted interference/interference immunity						
Wire range, finely stranded/single core	0.14 mm^2 – 4 mm^2 / 0.14 mm^2 – 6 mm^2 / 20 – 10 AWG			0.14 mm^2 – 4 mm^2 / 0.14 mm^2 – 6 mm^2 / 20 – 10 AWG		
Location of mounting rail	horizontal			horizontal		
Accessories						
[1)] see limit curve on page 465						

Subject to change without further notice

WEG

Overall width 22.5mm
Screw clamp

250 V AC / 250 V DC 4 A (DPDT)
2 Changeover contact
Approvals:

Dimensions (mm): W x H x D
22.5 x 58 x 90.5

Operating voltage	Type	Part no.	Std. pack
24 V AC/DC	WEG-REL-2W-250V5A	57.800.7053.0	1
48 V AC/DC			
115 V AC/DC			
230 V AC			
Wiring diagram, derating curve, limit curve	**See pages 466-467**		
Coil circuit			
Operating voltage	22 V AC/DC		
Nominal input current	31 mA AC / 29 mA DC		
Nominal input capacity	0.75 VA / 0.7 W		
Holding current at 20 °C	4.7 mA AC / 3.6 mA DC		
Switching characteristics			
Maximum switching voltage	250 V AC / 250 V DC[1)]		
Maximum starting current	4 A AC/DC[1)]		
Maximum switching capacity	1100 V A / 140 W[1)]		
Maximum continous current	15 A AC (200 ms)		
Pickup/dropout delay approx.	16 ms / 20 ms		
Chatter time	3 ms		
Maximum switching frequency			
Contact material	$AgCu_3$ + 0,2 µ Au		
Minimum switchable voltage	12 V DC		
Minimum switchable current	10 mA		
Mechanical endurance	> 3 x 10^7		
Electrical endurance at 24 V DC / 1 A	> 2 x 10^6		
Electrical endurance at 230 V AC / 3 A	> 6 x 10^5		
Rated voltage			
Isolation voltage of input/output	2 $kV_{eff.}$		
Overvoltage category			
Degree of pollution			
Ambient temperature	–25 °C...Derating		
Storage temperature	–40 °C...+85 °C		
Protection type/mounting rail	IP 20/TS 32 or TS 35		
Norms/specifications			
Emitted interference/interference immunity			
Wire range, finely stranded/single core	0.14 mm^2 – 4 mm^2 / 0.14 mm^2 – 6 mm^2 / 20 – 10 AWG		
Location of mounting rail	horizontal		
Accessories			
[1)] see limit curve on page 465			

electronics

Relay modules
Operating voltage: 115 V / 230 V

WEG

Overall width 20mm
Screw clamp

250 V AC / 125 V DC, 1 A (SPDT, N.O.)
1 Make contact

250 V AC / 250 V DC, 3 A (SPDT)
1 Changeover contact
Approvals:

Dimensions (mm): W x H x D

20 x 58 x 90.5

Operating voltage	Type	Part no.	Std. pack	Type	Part no.	Std. pack
115 V AC/DC				WEG-DUO-1W-250V3A	57.800.5153.0	1
230 V AC	WEG-230-1S-250V1A	57.800.0353.0	1	WEG-DUO-1W-250V3A	57.800.5153.0	1
Wiring diagram, derating curve, limit curve	**See pages 466-467**			**See pages 466-467**		
Coil circuit						
Operating voltage	UB +6 %/–10 %			115 V AC/DC +6 %/–10 %	230 V AC/DC +6 %/–10 %	
Nominal input current	14 mA AC			12 mA AC/DC	10 mA AC/DC	
Nominal input capacity	3.2 VA			1.3 VA / 1.3 W	2.3 V A / 2.3 W	
Holding current at 20°C	4.4 mA AC			2.8 mA AC / 2.4 mA DC	3.6 mA AC / 2.6 mA DC	
Switching characteristics						
Maximum switching voltage	250 V AC / 125 V DC[1)]			250 V AC / 250 V DC[1)]		
Maximum starting current	1 A AC/DC[1)]			3 A AC/DC[1)]		
Maximum switching capacity	1200 V A / 120 W[1)]			2000 V A / 100 W[1)]		
Maximum continous current	16 A (25 ms)			16 A AC (max. 4 s, 10% ED)		
Pickup/dropout delay approx.	5.5 ms / 8.2 ms			12 ms / 8 ms		
Chatter time	2 ms			3 ms		
Maximum switching frequency						
Contact material	AgNi 0,15 + 1 µ Au			AgNi 0.15 + 0.2 µ Au		
Minimum switchable voltage	80 mV			12 V DC		
Minimum switchable current	50 µA			10 mA		
Mechanical endurance	> 20 x 10^6			> 20 x 10^6		
Electrical endurance at 24 V DC / 1 A	> 6 x 10^5			> 6 x 10^6		
Electrical endurance at 230 V AC / 3 A	> 1 x 10^5			> 7 x 10^5		
Rated voltage						
Isolation voltage of input/output	2 $kV_{eff.}$			2 $kV_{eff.}$		
Overvoltage category						
Degree of pollution						
Ambient temperature	–25 °C...Derating			–25 °C...Derating		
Storage temperature	–40 °C...+85 °C			–40 °C...+85 °C		
Protection type/mounting rail						
Norms/specifications	IP 20/TS 32 or TS 35			IP 20/TS 32 or TS 35		
Emitted interference/interference immunity						
Wire range, finely stranded/single core	0.14 mm^2 – 4 mm^2 / 0.14 mm^2 – 6 mm^2 / 20 – 10 AWG			0.14 mm^2 – 4 mm^2 / 0.14 mm^2 – 6 mm^2 / 20 – 10 AWG		
Location of mounting rail	horizontal			horizontal		
Accessories						
[1)] see limit curve on page 465						

Subject to change without further notice

Relay modules
for current signals – 4...20 mA – 0...20 mA

current relay

Overall width 22.5mm
Screw clamp

380 V AC / 125 V DC 7 A (SPDT)
1 Changeover contact
Approvals: UL, CSA

Dimensions (mm): W x H x D
22.5 x 58 x 90.5

Description	Type	Part no.	Std. pack
0-20mA Trip Amplifier Relay	SR 4...20 mA	57.802.3053.0	1
1 set point			
Wiring diagram	**See page 468**		
Coil circuit			
Operating voltage with filtering	9,5 V...40 V		
Operating voltage without filtering	8 V...27 V		
Nominal input current at 40 V			
	with relay off ca. 7 mA		
	with relay on ca. 35 mA		
Current input R, 100 Ω (max. 7 V)	4...20 mA		
Switching threshold (adjusted with potentiometer)	2...20 mA		
Residual ripple $I_{max.}$ at measured current 22 mA	5 mA_{SS} / 5 mA_{pp}		
Residual ripple $I_{max.}$ at measured current 2 mA	0.5 mA_{SS} / 0.5 mA_{pp}		
Switching hysteresis	ca. 0.4 mA		
Switching characteristics			
Maximum switching voltage	380 V AC / 125 V DC		
Maximum switching current	7 A		
Maximum switching capacity	1750 V A / 210 W		
Permitted minimum load	5 V DC / 10 mA		
Nominal current load	250 V AC, 7 A / 30 V DC, 7 A		
Isolation voltage of input/output	250 $V_{eff.}$		
Isolation voltage of terminal TS	2 $kV_{eff.}$		
Overvoltage category	III		
Degree of pollution	2		
Ambient temperature, connected in series without intervals	0 °C...50 °C		
Ambient temperature, connected in series with interval of 2 cm	0 °C...60 °C		
Storage temperature	–40 °C...+85 °C		
Protection type/mounting rail	IP 20/TS 35		
Norms/specifications			
Location of mounting rail	horizontal		
Wire range	20 – 10 AWG		
Accessories			

Subject to change without further notice

Relay modules

RAB

Relay output modules
– 1 relay
– 4 relay
– 8 relay
– 16 relay

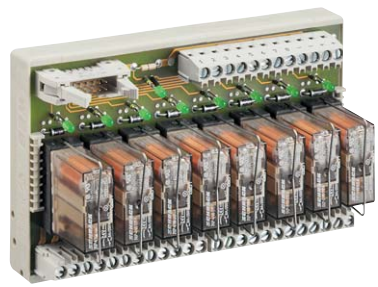

	250 V AC / 24 V DC 5 A (SPDT) **1 Changeover contact** Approvals:			**250 V AC / 24 V DC 5 A (SPDT)** **1 Changeover contact** Approvals:		
Dimensions (mm): W x H x D	12.5 x 80 x 58.3			70/128/280 x 80 x 71		
Description	Type	Part no.	Std. pack	Type	Part no.	Std. pack
1 relay	R12-12V-1W-250V5A	87.220.7553.0	10			
4 relay positive switching				RAB-SS 4	87.220.1853.0	1
8 relay positive switching				RAB-FSS 8	87.220.1953.3	1
16 relay positive switching				RAB-FSS 16	87.220.2253.3	1
4 relay negative switching				RAB-SS 4 M	87.221.5553.0	1
Wiring diagram, derating curve, limit curve	**See page 469**			**See page 469**		
Coil circuit						
Operating voltage	12 V AC/DC ±10%			24 V DC +10%/–15%		
Nominal input current per input	34 mA			25 mA		
Nominal power consumption	0.4 W			0.6 W		
Holding current at 20 °C	> 3.5 mA			> 2 mA		
Status display	LED Green			LED Green		
Switching characteristics						
Maximum switching voltage	250 V AC / [1]V DC			250 V AC / [1]V DC		
Maximum switching current	8 A AC/ [1]A DC			8 A AC/ [1]A DC		
Maximum switching capacity	2000 VA / 120 W			2000 VA / 120 W		
Maximum continous current	5 A AC/DC[1]			5 A AC/DC[1]		
Pickup/dropout delay approx	9 ms / 12 ms			9 ms / 12 ms		
Chatter time	4 ms			4 ms		
Maximum switching frequency	40 Hz			40 Hz		
Contact material	AgCdO			AgCdO		
Minimum switchable voltage	12 V			12 V		
Minimum switchable current	100 mA			100 mA		
Mechanical endurance	3×10^7			3×10^7		
Electrical endurance at 24 V DC / 5 A	6×10^5			6×10^5		
Electrical endurance at 230 V AC / 5 A	6×10^5			6×10^5		
Rated voltage						
Isolation voltage of input/output	4 $kV_{eff.}$			4 $kV_{eff.}$		
Overvoltage category						
Degree of pollution						
Ambient temperature	–25 °C...Derating			–25 °C...Derating		
Storage temperature	–40 °C...+85 °C			–40 °C...+85 °C		
Mounting rail	TS 32 or TS 35			TS 32 or TS 35		
Norms/specifications						
Emitted interference/interference immunity						
Wire range, finely stranded/single core	0.5 mm^2 – 2.5 mm^2 / 0.5 mm^2 – 4 mm^2 / 22 – 12 AWG			0.5 mm^2 – 2.5 mm^2 / 0.5 mm^2 – 4 mm^2/ 22 – 12 AWG		
Location of mounting rail	horizontal			horizontal		
Accessories						
Replacement relay					Z8.000.0056.9	10
[1] See limit curve on page 465						

Subject to change without further notice

RAB

Relay output modules
– 1 relay
– 4 relay
– 8 relay
– 16 relay

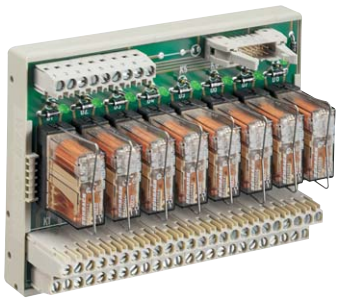

Important note for user:
In the case of multiple modules
(1 changeover contact/2 changeover contacts),
the outputs must be supplied from the same
phase (e.g. L1)

250 V AC / 24 V DC, 5 A (DPDT)
2 Changeover contacts

Approvals:

Dimensions (mm): W x H x D 70/128 x 80 x 71

Description	Type	Part no.	Std. pack
1 relay			
4 relay positive switching	RAB-SS 4/2	87.220.4753.3	1
8 relay positive switching	RAB-SS 8/2	87.220.4853.3	1
6 relay positive switching			
4 relay negative switching			
Wiring diagram, derating curve, limit curve	**See page 469**		
Coil circuit			
Operating voltage	24 V DC + 10 %/– 15 %		
Nominal input current	25 mA		
Nominal power consumption	0.6 W		
Holding current at 20 °C	> 2 mA		
Status display	LED Green		
Switching characteristics			
Maximum switching voltage	250 V AC / [1]V DC		
Maximum switching current	8 A AC/[1]A DC		
Maximum switching capacity	2000 VA / 120 W		
Maximum continuous current	5 A AC/DC[1]		
Pickup/dropout delay approx.	9 ms / 12 ms		
Chatter time	4 ms		
Maximum switching frequency	40 Hz		
Contact material	AgCdO		
Minimum switchable voltage	12 V		
Minimum switchable current	100 mA		
Mechanical endurance	3×10^7		
Electrical endurance at 24 V DC / 5 A	6×10^5		
Electrical endurance at 230 V AC / 5 A	6×10^5		
Rated voltage			
Isolation voltage of input/output	4 $kV_{eff.}$		
Overvoltage category			
Degree of pollution			
Ambient temperature	–25 °C...Derating		
Storage temperature	–40 °C...+85 °C		
Mounting rail	TS 32 or TS 35		
Norms/specifications			
Emitted interference/interference immunity			
Wire range, finely stranded/single-core	0.5 mm^2 – 2.5 mm^2 / 0.5 mm^2 – 4 mm^2/ 22 – 12 AWG		
Location of mounting rail	horizontal		
Accessories			
Replacement relay		Z8.000.0035.5	10
[1] See limit curve on page 465			

electronics

Relay modules

Relay modules input/output
– 1 relay
– 4 relay
– 8 relay

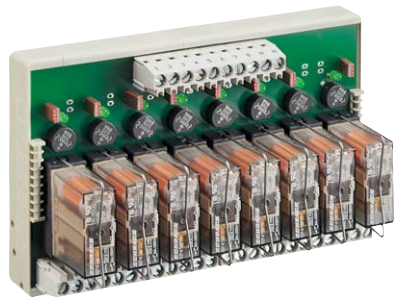

Description	Type	Part no.	Std. pack	Type	Part no.	Std. pack
	250 V AC / 24 V DC 4 A (SPDT) **1 Changeover contact** Approvals:			**250 V AC / 24 V DC 4 A (SPDT)** **1 Changeover contact** Approvals:		
Dimensions (mm): W x H x D	12.5 x 80 x 70			70/128 x 80 x 71		
1 relay	WR1-230-1W-250V4A	80.010.0011.0	10			
4 relay				WR4-115-1W-250V4A	80.010.1102.0	1
8 relay				WR8-115-1W-250V4A	80.010.1110.0	1
Wiring diagram, derating curve, limit curve	**See pages 470-471**			**See pages 470-471**		
Coil circuit						
Operating voltage	230 V AC +6% / –10%			115 V AC +6% /–10%		
Nominal input current per input	ca. 4.5 mA AC			ca. 8.5 mA AC/DC		
Nominal power consumption	ca. 1.0 VA			ca. 0.95 VA/W		
Holding current at 20 °C	> 0.9 mA AC			> 1.3 mA AC / > 1.0 mA DC		
Suppression circuit for input	polarised diode, suppressor diode			polarised diode, suppressor diode		
Status display	LED Green			LED Green		
Switching characteristics						
Maximum switching voltage	250 V AC/ [1]V DC			250 V AC / [1]V DC		
Maximum switching current	8 A AC/[1]A DC			8 A AC/[1]A DC		
Maximum switching capacity	2000 VA /192 W			2000 VA / 192 W		
Maximum continuous current	4 A AC/DC			4 A AC/DC		
Pickup/dropout delay approx.	10 ms /15 ms			12 ms / 13 ms		
Chatter time	4 ms			4,5 ms		
Maximum switching frequency	40 Hz			40 Hz		
Contact material	AgNi + 4...6 µ Au			AgNi 0.15 + 0.2 µ Au		
Minimum switchable voltage	µV			5 V		
Minimum switchable current	µA			10 mA		
Mechanical endurance	3×10^7			3×10^7		
Electrical endurance at 24 V DC / 4 A	3×10^5			3×10^5		
Electrical endurance at 230 V AC / 4 A	3×10^5			3×10^5		
Rated voltage						
Isolation voltage of input/output	4 $kV_{eff.}$			4 $kV_{eff.}$		
Overvoltage category						
Degree of pollution						
Ambient temperature	–25 °C...Derating			–25 °C...+50 °C		
Storage temperature	–40 °C...+80 °C			–40 °C...+80 °C		
Mounting rail	TS 32 or TS 35			TS 32 or TS 35		
Norms/specifications						
Emitted interference/interference immunity						
Wire range, finely stranded/single-core	0.5 mm^2 – 2.5 mm^2 / 0.5 mm^2 – 4 mm^2 / 22 – 12 AWG			0.5 mm^2 – 2.5 mm^2 / 0.5 mm^2 – 4 mm^2 / 22 – 12 AWG		
Location of mounting rail	horizontal			horizontal		
Accessories						
Replacement relay					Z8.000.0181.0	10
[1] See limit curve on page 465						

Subject to change without further notice

WR

Relay module input/output
– 1 relay
– 4 relay
– 8 relay

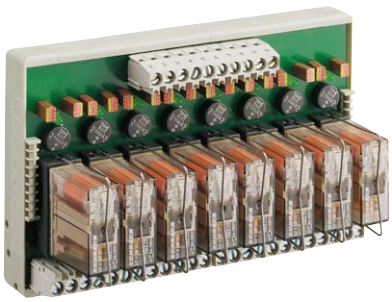

250 V AC / 24 V DC 4 A (SPDT)
1 Changeover contact

Approvals:

Dimensions (mm): W x H x D

70/128 x 80 x71

Description	Type	Part no.	Std. pack
1 relay			
4 relay	WR4-230-1W-250V4A	80.010.1106.0	1
8 relay	WR8-230-1W-250V4A	80.010.1114.0	1
Wiring diagram, derating curve, limit curve	**See pages 470-471**		
Coil circuit			
Operating voltage	230 V AC/DC +6%/–10%		
Nominal input current per input	approx. 4.5 mA AC/DC		
Nominal power consumption	approx. 1.0 VA/W		
Holding current at 20 °C	> 0.7 mA AC / > 0.5 mA DC		
Suppression circuit for input	polarised diode, suppressor diode		
Status display	LED Green		
Switching characteristics			
Maximum switching voltage	250 V AC / [1]V DC		
Maximum switching current	8 A AC / [1]A DC		
Maximum switching capacity	2000 VA / 192 W		
Maximum continuous current	4 A AC/DC		
Pickup/dropout delay approx.	12 ms / 13 ms		
Chatter time	4.5 ms		
Maximum switching frequency	40 Hz		
Contact material	AgNi 0.15 + 0.2 µ Au		
Minimum switchable voltage	5 V		
Minimum switchable current	10 mA		
Mechanical endurance	3×10^7		
Electrical endurance at 24 V DC / 4 A	3×10^5		
Electrical endurance at 230 V AC / 4 A	3×10^5		
Rated voltage			
Isolation voltage of input/output	4 $kV_{eff.}$		
Overvoltage category			
Degree of pollution			
Ambient temperature	–25 °C...+50 °C		
Storage temperature	–40 °C...+80 °C		
Mounting rail	TS 32 or TS 35		
Norms/specifications			
Emitted interference/interference immunity			
Wire range, finely stranded/single-core	0,5 mm^2 – 2,5 mm^2 / 0,5 mm^2 – 4 mm^2 / 22 – 12 AWG		
Location of mounting rail	horizontal		
Accessories			
Replacement relay		Z8.000.0181.0	10
[1] See limit curve on page 465			

electronics

Relay modules

Relay modules input/output
– 1 relay
– 4 relay
– 8 relay

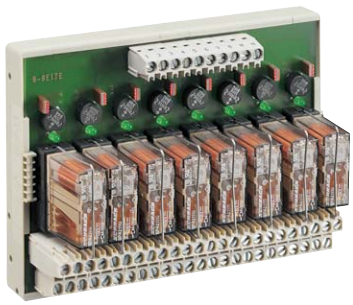

	250 V AC / 24 V DC 5 A (DPDT) **2 Changeover contacts** Approvals of the relays:			**250 V AC / 24 V DC 4 A (DPDT)** **2 Changeover contacts** Approvals of the relays:		
Dimensions (mm): W x H x D	22.5 x 80 x 68			70/128 x 80 x 71		
Description	Type	Part no.	Std. pack	Type	Part no.	Std. pack
1 relay	WR1-DUO-2W-250V5A	80.010.1100.0	5			
4 relay				WR4-115-2W-250V4A	80.010.1104.0	1
8 relay				WR8-115-2W-250V4A	80.010.1112.0	1
Wiring diagram, derating curve, limit curve	**See pages 470-471**			**See pages 470-471**		
Coil circuit						
Operating voltage	115/230 V AC/DC +6%/–10%			115 V AC/DC +6%/–10%		
Nominal input current per input	ca. 4.8 mA / 4.8 mA AC/DC			ca. 9.5 mA AC/DC		
Nominal power consumption	ca. 0.5 VA/W / 1.1 VA/W			ca. 1,0 VA/W		
Holding current at 20 °C	> 1.0 mA AC / > 0.8 mA DC			> 1.5 mA AC / > 1,0 mA DC		
Suppression circuit for input	polarised diode, suppressor diode			polarised diode, suppressor diode		
Status display	LED Green			LED Green		
Switching characteristics						
Maximum switching voltage	250 V AC / [1]V DC			250 V AC / [1]V DC		
Maximum continous current	6 A AC/[1]A DC			6 A AC/[1]A DC		
Maximum switching capacity	1500 VA / 192 W			1500 VA / 192 W		
Maximum switching current	6 A AC/DC (Derating beachten)			4 A AC/DC (Derating beachten)		
Pickup/dropout delay approx.	10 ms / 14 ms			< 12 ms / < 15 ms		
Chatter time	< 3 ms			< 4,5 ms		
Maximum switching frequency						
Contact material	AgNi 0.15 + 0.2 µ Au			AgNi 0,15 + 0,2 µ Au		
Minimum switchable voltage	5 V			5 V		
Minimum switchable current	10 mA			10 mA		
Mechanical endurance	3×10^7			3×10^7		
Electrical endurance at 24 V DC / 5 A	$1,5 \times 10^5$			1.5×10^5		
Electrical endurance at 230 V AC / 5 A	$1,5 \times 10^5$			1.5×10^5		
Rated voltage						
Isolation voltage of input/output	4 $kV_{eff.}$			4 $kV_{eff.}$		
Overvoltage category						
Degree of pollution						
Ambient temperature	–25 °C...Derating			–25 °C...Derating		
Storage temperature	–40 °C...+85 °C			–40 °C...+80 °C		
Mounting rail	TS 32 or TS 35			TS 32 or TS 35		
Norms/specifications						
Emitted interference/interference immunity						
Wire range, finely stranded/single-core	0.5 mm^2 – 2.5 mm^2 / 0.5 mm^2 – 4 mm^2 / 22 –12 AWG			0.5 mm^2 – 2.5 mm^2 / 0.5 mm^2 – 4 mm^2 / 22 –12 AWG		
Location of mounting rail	horizontal			horizontal		
Accessories						
Replacement relay		Z8.000.0176.2	10		Z8.000.0176.2	10

[1] See limit curve on page 465

Subject to change without further notice

WR

Relay modules input/output
– 1 relay
– 4 relay
– 8 relay

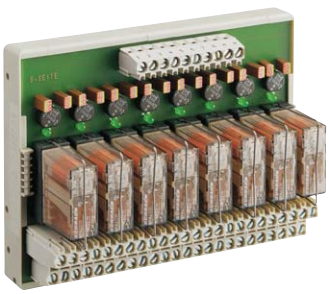

250 V AC / 24 V DC 4 A (DPDT)
2 Changeover contacts

Approvals of the relays:

Dimensions (mm): W x H x D

70/128 x 80 x 71

Description	Type	Part no.	Std. pack	Type	Part no.	Std. pack
1 relay						
4 relay	WR4-230-2W-250V4A	80.010.1108.0	1			
8 relay	WR8-230-2W-250V4A	80.010.1116.0	1			
Wiring diagram, derating curve, limit curve	**See pages 468-469**					
Coil circuit						
Operating voltage	230 V AC/DC +6%/–10%					
Nominal input current per input	ca. 4.5 mA AC/DC					
Nominal input capacity	ca. 1.0 VA/W					
Holding current at 20 °C	> 0.7 mA AC / > 0.5 mA DC					
Suppression circuit for input	polarised diode, suppressor diode					
Status display	LED Green					
Switching characteristics						
Maximum switching voltage	0250 V AC / [1] V DC					
Maximum continous current	6 A AC / [1] A DC					
Maximum switching capacity	1500 VA / 192 W					
Maximum switching current	4 A AC/DC (Derating beachten)					
Pickup/dropout delay approx.	< 13 ms / < 16 ms					
Chatter time	< 4,5 ms					
Maximum switching frequency						
Contact material	AgNi 0,15 + 0,2 µ Au					
Minimum switchable voltage	5 V					
Minimum switchable current	10 mA					
Mechanical endurance	3×10^7					
Electrical endurance at 24 V DC / 5 A	1.5×10^5					
Electrical endurance at 230 V AC / 5 A	1.5×10^5					
Rated voltage						
Isolation voltage of input/output	4 $kV_{eff.}$					
Overvoltage category						
Degree of pollution						
Ambient temperature	–25 °C...Derating					
Storage temperature	–40°C...+80 °C					
Mounting rail	TS 32 or TS 35					
Norms/specifications						
Emitted interference/interference immunity						
Wire range, finely stranded/single-core	0.5 mm^2 – 2.5 mm^2 / 0.5 mm^2 – 4 mm^2 / 22 –12 AWG					
Location of mounting rail	horizontal					
Accessories						
Replacement relay		Z8.000.0176.2	10			
[1] See limit curve on page 465						

electronics

Relay modules
Wieland Relay System

WRS

– 24 V input signal
– 4 kV separation between I/O at a creepage and clearance distance of 8 mm

	250 V AC/DC 5 A 48 V DC 20 mA **1 Make contact (SPST, N.O.)** Approvals: CSA,			**250 V AC/DC 5 A 48 V DC 20 mA** **1 Changeover contact (SPDT)** Approvals: CSA,		
Dimensions (mm): W x H x D	12.5 x 80 x 58.3			12.5 x 80 x 60		
Description	Type	Part no.	Std. pack	Type	Part no.	Std. pack
WRS Relay system	WRS-REL-1S-250V5A	80.010.0005.0	10	WRS-REL-1W-250V5A	80.010.0008.0	10
WRS Relay system	WRS-REL-1S-48V20M	80.010.0007.0	10	WRS-REL-1W-48V20M	80.010.0009.0	10
WRS high-current relays						
Wiring diagram, derating curve, limit curve	**See pages 472-473**			**See pages 472-473**		
Coil circuit						
Operating voltage	24 V AC/DC +10 %/–15 %			24 V DC +10 %/–15 %		
Nominal input current	25 mA			25 mA		
Nominal power consumption	ca. 0.6 W/VA			ca. 0.6 W/VA		
Holding current at 20 °C	≥ 2 mA			≥ 2 mA		
Parallel connection of max.	20 Relays			20 Relays		
Suppression circuit of input	polarised diode, suppressor diode			polarised diode, suppressor diode		
Status display	LED Green			LED Green		
Switching characteristics	**Output**	**Input**		**Output**	**Input**	
Maximum switching voltage	250 V AC/DC[2)]	48 V DC		250 V AC/DC[2)]	48 V DC	
Maximum switching current	8 A AC/DC[2)]	20 mA		8 A AC/DC[2)]	20 mA	
Maximum switching capacity	2000 VA / 192 W	1.2 W		2000 VA / 192 W	1,2 W	
Maximum continuous current	5 A AC/DC			5 A AC/DC		
Pickup/dropout delay approx	8 ms / 8 ms	10 ms / 10 ms		8 ms / 8 ms	10 ms / 10 ms	
Chatter time	3 ms	3 ms		3 ms	3 ms	
Contact material	AgCdO	AgNi 0.15 + 10 µ Au		AgCdO	AgNi 0,15 + 10 µ Au	
Minimum switchable voltage	12 V	µV		12 V	µV	
Minimum switchable current	100 mA	µA		100 mA	µA	
Mechanical endurance	3×10^7	3×10^7		3×10^7	3×10^7	
Electrical endurance at 26 V DC / 15 mA		3×10^5			3×10^5	
Electrical endurance at 24 V DC / 5 A	2.5×10^5			2.5×10^5		
Electrical endurance at 230 V AC / 5 A	2.5×10^5			2.5×10^5		
Rated voltage						
Isolation voltage of input/output	4 $kV_{eff.}$	4 $kV_{eff.}$		4 $kV_{eff.}$	4 $kV_{eff.}$	
Overvoltage category						
Degree of pollution						
Ambient temperature	–25°C...Derating	–25 °C...+50 °C		–25 °C...Derating	–25 °C...+50 °C	
Storage temperature	–40 °C...+85 °C	–40 °C...+85 °C		–40 °C...+85 °C	–40 °C...+85 °C	
Mounting rail	TS 32 or TS 35			TS 32 or TS 35		
Norms/specifications						
Emitted interference/interference immunity						
Wire range, finely stranded/single-core	0.5 mm^2 – 2.5 mm^2/ 0.5 mm^2 – 4 mm^2 / 22 – 12 AWG			0.5 mm^2 – 2.5 mm^2/ 0.5 mm^2 – 4 mm^2 / 22 – 12 AWG		
Location of mounting rail	horizontal			horizontal		
Accessories						
Plug-in jumper (I_{max} = 0.5 A AC/DC)		Z8.000.0103.4	10		Z8.000.0103.4	10
[2)] See d.c. limit curve on page 471						

Subject to change without further notice

WRS

– 24 V input signal
– 4 kV separation between I/O at a creepage and clearance distance of 8 mm

High current relay for 16 A

Important note for user:
In the case of single modules with 2 changeover contacts, the two sets of contacts have to be supplied from the same phase (e.g. L1)

	250 V AC/DC 5 A 48 V DC 20 mA 2 Changeover contact (DPDT)			**250 V AC/DC 16 A 1 Changeover contact (SPDT)**		
	Approvals: CSA,			Approvals: CSA, CE		
Dimensions (mm): W x H x D	22.5 x 80 x 60			22.5 x 80 x 58.3		
Description	Type	Part no.	Std. pack	Type	Part no.	Std. pack
WRS Relay system	WRS-REL-2W-250V5A	80.010.1003.0	5			
WRS Relay system	WRS-REL-2W-48V20M	80.010.1002.0	5			
WRS high-current relay				WRS-REL-1W-250V16	80.010.0010.0	5
Wiring diagram, derating curve, limit curve	**See pages 472-473**			**See pages 472-473**		
Coil circuit	**Output**	**Input**				
Operating voltage	24 V AC/DC +10 %/–15 %	24 V DC +10 %/–15 %		24 V AC/DC +10 %/–15 %		
Nominal input current		25 mA		25 mA		
Nominal power consumption		ca. 0.6 W/VA		ca. 0,6 W/VA		
Holding current at 20 °C		≥ 2 mA		≥ 2 mA		
Parallel connection of max.	20 Relays			20 Relays		
Suppression circuit of input	Polarised diode					
Status display	LED Green			LED Green		
Switching characteristics	**Output**	**Input**				
Maximum switching voltage	250 V AC/DC[2)]	48 V DC		250 V AC / V DC[2)]		
Maximum switching current	6 A AC/DC[2)]	20 mA		16 A AC / V DC[2)]		
Maximum switching capacity	1500 VA / 144 W	1,2 W		4000 VA / 400 W[2)]		
Maximum continuous current	5 A AC/DC			16 A AC/DC[2)]		
Pickup/dropout delay approx.	10 ms / 5 ms	10 ms / 10 ms		10 ms / 5 ms		
Chatter time	3 ms	3 ms		3 ms		
Contact material	AgCdO	AgNi 0.15 + 10 µ Au		AgCdO		
Minimum switchable voltage	12 V	µV		12 V		
Minimum switchable current	100 mA	µA		100 mA		
Mechanical endurance	3×10^7	3×10^7		3×10^7		
Electrical endurance at 26 V DC / 15 mA		3×10^5				
Electrical endurance at 24 V DC / continuous current	$2{,}5 \times 10^5$			1.8×10^5		
Electrical endurance at 230 V AC / continuous current	$2{,}5 \times 10^5$			1.8×10^5		
Rated voltage						
Isolation voltage of input/output	4 $kV_{eff.}$	4 $kV_{eff.}$		4 $kV_{eff.}$		
Overvoltage category						
Degree of pollution						
Ambient temperature	–25 °C...+50 °C	–25 °C...+50 °C		–25 °C...Derating		
Storage temperature	–40 °C...+85 °C	–40 °C...+85 °C		–40 °C...+85 °C		
Mounting rail	TS 32 or TS 35			TS 32 or TS 35		
Norms/specifications						
Emitted interference/interference immunity						
Wire range, finely stranded/single-core	0.5 mm^2 – 2.5 mm^2 / 0.5 mm^2 – 4 mm^2 / 22 – 12 AWG			0.5 mm^2 – 2.5 mm^2 / 0.5 mm^2 – 4 mm^2 / 22 – 12 AWG		
Location of mounting rail	horizontal			horizontal		
Accessories						
Plug-in jumper (I_{max} = 0.5 A AC/DC)		Z8.000.0103.4	10		Z8.000.0103.4	10

[2)] see d.c. limit curve and derating curve on page 471

electronics

Relay modules
Timer relay
flare

Multifunction timer relay
– on delay
– Single Shot
– Cycle Off – pulsing
– Cycle On – pulsing
– off delay
– timer range 0.1 sec – 300 sec

Timer relay on delay
– timer range 1 – 100 sec, 1 – 100 min

Dimensions (mm): W x H x D
6.2 x 89 x 70

Multifunction / On delay/off delay, Single Shot, cycle / 1 make contact (SPST N.O.)
Approvals: CSA

Timer on delay relay
Approvals: CSA

Time range	Screw terminal	Spring-clamp	Std. pack	Screw terminal	Spring-clamp	Std. pack
0.1 – 300 sec		81.020.4100.0	10			
1 – 100 sec					81.020.4101.0	10
1 – 100 min					81.020.4102.0	10
Wiring diagram, derating curve, limit curve	**See pages 474**			**See pages 474**		
Coil circuit						
Operating voltage	24 V DC +10%/–15%			24 V DC +10%/–15%		
Control voltage (TRIGGER)	24 V DC +10%/–15%			24 V DC +10%/–15%		
Nominal current	ca. 10 mA			ca. 10 mA		
Time setting	At the front (behind the hinged identification plate holder)			At the front (behind the hinged identification plate holder)		
Setting of function	DIP switch S1–S5/potentiometer			Potentiometer		
Status display	LED Green			Green LED		
Repeat accuracy	± 1% of selected range			± 1% of selected range		
Switching characteristics						
Maximum switching voltage	250 V AC / 300 V DC			250 V AC / 300 V DC		
Maximum switching current	6 A AC / 2 A DC			6 A AC / 2 A DC		
Maximum switching capacity	1500 VA / 48 W			1500 VA / 48 W		
Maximum starting current	10 A; 4 sec.			10 A; 4 sec.		
Pickup/dropout delay	1 ms / 5 ms			1 ms / 5 ms		
Chatter time	2 ms			2 ms		
Maximum switching frequency	20 Hz			20 Hz		
Contact material	$AgSnO_2$			$AgSnO_2$		
Minimum switchable voltage	12 V			12 V		
Minimum switchable current	8 mA			8 mA		
Mechanical endurance	2×10^7			2×10^7		
Electrical endurance 24 V DC / 2 A	6×10^5			6×10^5		
Electrical endurance 230 V AC / 6 A	8×10^4			8×10^4		
Rated voltage						
Isolation voltage of input/output	4 $kV_{eff.}$			4 $kV_{eff.}$		
Overvoltage category	III (according to HD 625.1S1)			III (according to HD 625.1S1)		
Degree of pollution	2 (according to HD 625.1S1)			2 (according to HD 625.1S1)		
Ambient temperature	0 °C...+50 °C			0 °C...+50 °C		
Storage temperature	–40 °C...+80 °C			–40 °C...+80 °C		
Protection type/mounting rail	IP 20 / TS35			IP 20 / TS35		
Norms/specifications	VDE 0160; VDE 0106 T101			VDE 0160; VDE 0106 T101		
Emitted interference/interference immunity	EN 61000-6-3; EN 61000-6-2			EN 61000-6-3; EN 61000-6-2		
Wire range of screw terminals	–			–		
Wire range of spring clamp terminals	24 – 12 AWG			24 – 12 AWG		
finely stranded	0.14 mm^2 – 1.5 mm^2			0.14 mm^2 – 1.,5 mm^2		
single core	0.5 mm^2 – 2.5 mm^2			0.5 mm^2 – 2.5 mm^2		
CSA EX	Class I, Division 2, Groups A, B, C and D, T6			Class I, Division 2, Groups A, B, C and D, T6		
Accessories						
Plug-in jumper ($U_{max.}$ = 50 V, $I_{max.}$ = 2 A)	Z8.000.0200.8			Z8.000.0200.8		
8 digit marker tag, unmarked, 60 off	Z4.242.5153.0			Z4.242.5153.0		
Comb for potential distribution, red/blue	Z8.000.0202.3 / Z8.000.0202.4			Z8.000.0202.3 / Z8.000.0202.4		
End caps for comb, red/blue	Z8.000.0202.1 / Z8.000.0202.2			Z8.000.0202.1 / Z8.000.0202.2		

Subject to change without further notice

WRS

Multifunction time relay
– on delay
– Single Shot
– Cycle on, pulsing
– off delay
– timer range 0.1 sec – 255 sec

WRS Multifunction timer relay / 1 Changeover contact (SPDT)

Approvals: CSA,

Dimensions (mm): W x H x D
38.7 x 80 x 60

Multi function	Screw terminal	Spring-clampStd. pack	
0.10 – 255.0 sec	WRS-TIMER-250V5A	81.020.3000.0 10	
Wiring diagram, derating curve, limit curve	**See pages 475**		
Coil circuit			
Operating voltage	24 V DC +10%/–15%		
Nominal input current	8.2/29 mA inactive/active		
Suppression circuit of input	Polarised diode		
Status display			
	Input	LED Green	
	Output	LED red	
Time setting	Potentiometer		
Parallel connection of max	20 Relays		
Switching characteristics			
Maximum switching voltage	250 V AC / V DC[1)]		
Maximum switching current	6 A AC / V DC[1)]		
Maximum switching capacity	1500 VA / 192 W[1)]		
Maximum continuous current	5 A AC / DC[1)]		
Pickup/dropout delay approx.	10 ms / 5 ms		
Chatter time	3 ms		
Contact material	AgNi 0.15 + 0.2 µ Au		
Minimum switchable voltage	5 V		
Minimum switchable current	10 mA		
Mechanical endurance	3×10^7		
Electrical endurance at 24 V DC / continuous current	1.5×10^5		
Electrical endurance at 230 V AC / continuous current	1.5×10^5		
Insulation voltage of input/output	4 $kV_{eff.}$		
Ambient temperature	–25 °C...+50 °C		
Storage temperature	–40 °C...+85 °C		
Wire range	22 - 12 AWG		
finely stranded	0.5 mm^2 – 2.5 mm^2		
single core	0.5 mm^2 – 4 mm^2		
Mounting rail	TS 32 or TS 35		
Location of mounting rail	horizontal		
Accessories			
Plug-in jumper ($I_{max.}$ = 0.5 A AC/DC)		Z8.000.0103.4 10	
[1)] See limit curve on page 471			

electronics

flare

Wiring diagrams: *flare* – Mechanical relay modules

12-V-/24-V-Relay
1 Changeover contact (SPDT)

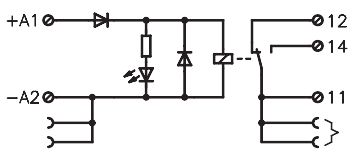

110-V-/230-V-Relay
1 Changeover contact (SPDT)

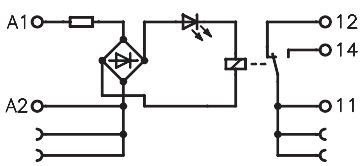

24-V-Relay
2 Changeover contact (DPDT)

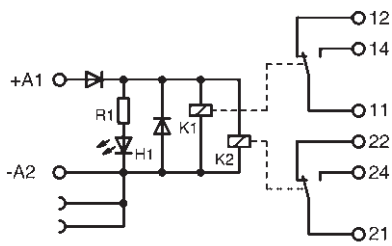

Isolating blade terminal relay
(SPDT)

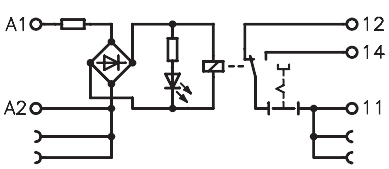

Hand-0-Auto-Relay
(SPST, N.O.)

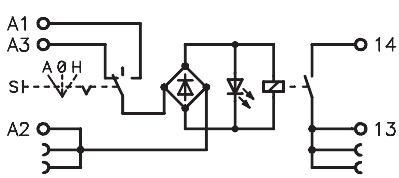

Housing with spring clamp terminals

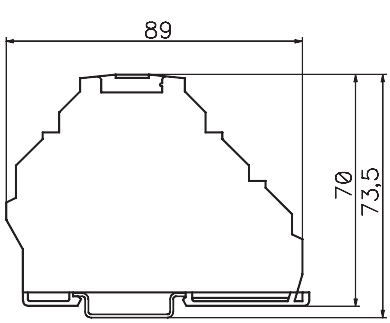

Housing with screw terminals

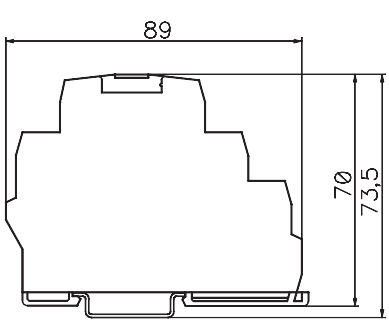

Connection of isolating blade terminal relay

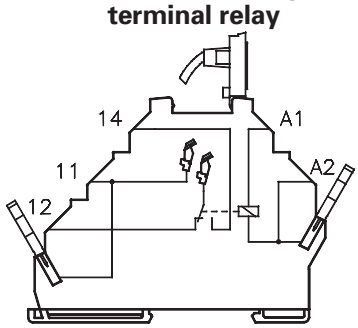

Subject to change without further notice

Derating: *flare* – Mechanical relay modules

24-V-Relay
1/2 Changeover contact (SPDT/DPDT)
12-V-Relay 1 Changeover contact (SPDT)
Isolating blade terminal relay (SPDT)
HAND-0-AUTO-Relay (SPST, N.O.)
Time relay (SPST, N.O.)

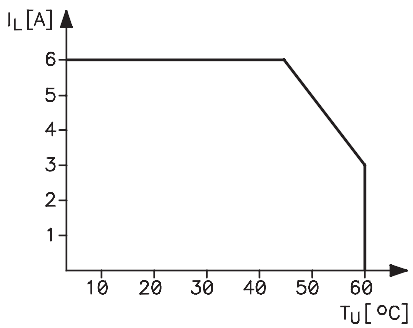

110-V-Relay 1 Changeover contact (SPDT)

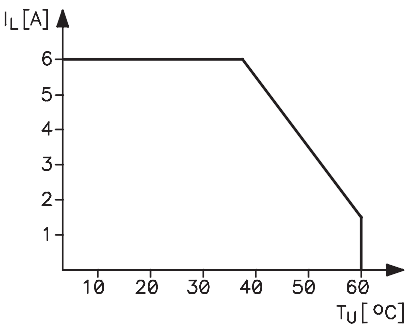

230 V-Relay
1 Changeover contact (SPDT)

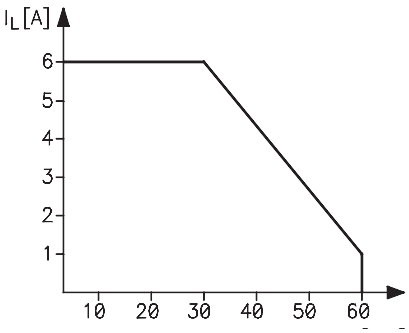

Derating curve for d.c. loads

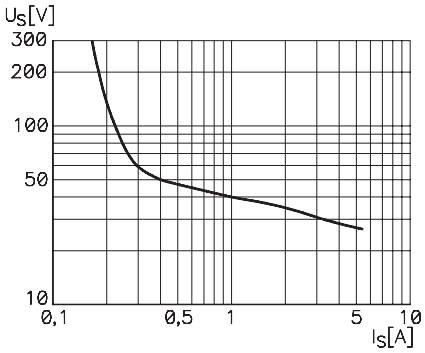

Switching capacity according to 60947-5.1

	resistive	inductive	
	AC 12	AC 15	DC 13
V	A	A	A
24	6	3	1
110	6	3	0.2
230	6	3	0.1

Relay modules

Wiring diagrams

Derating

WEG-REL-1S 250 V 3 A

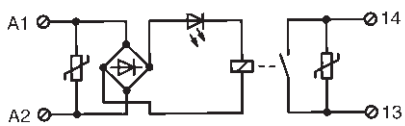

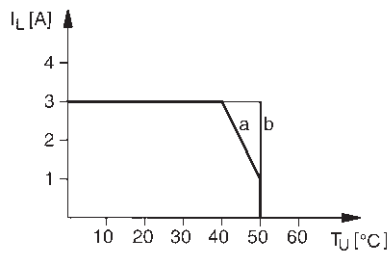

WEG-REL-1W 250 V 5 A

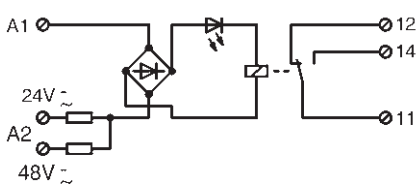

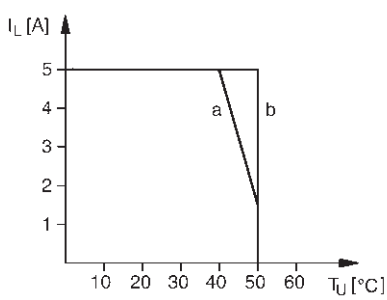

WEG-REL-2W 250 V 4 A

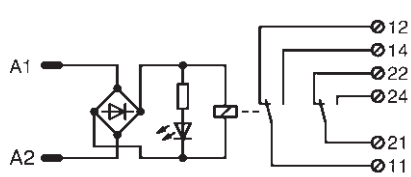

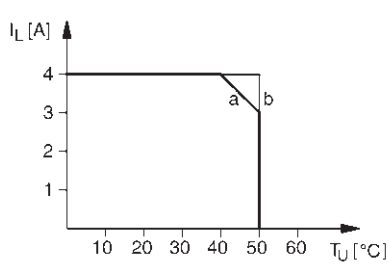

a = side by side without spacing
b = side by side with spacing > 20 mm

Subject to change without further notice

Wiring diagrams

Derating

WEG-230-1S 250 V 1 A

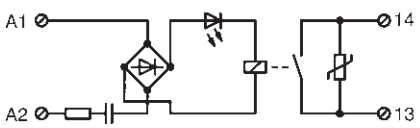

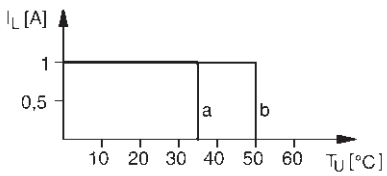

a = side by side without spacing
b = side by side with spacing > 20 mm

WEG-DUO-1W 250 V 3 A

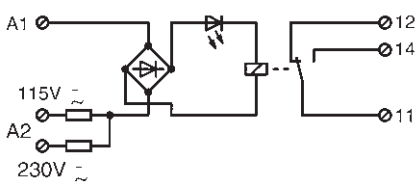

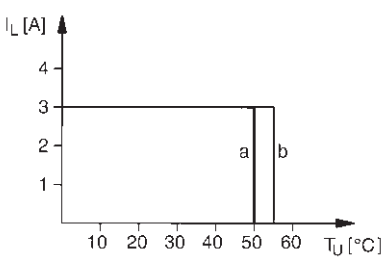

Limit curve (for resistive load)

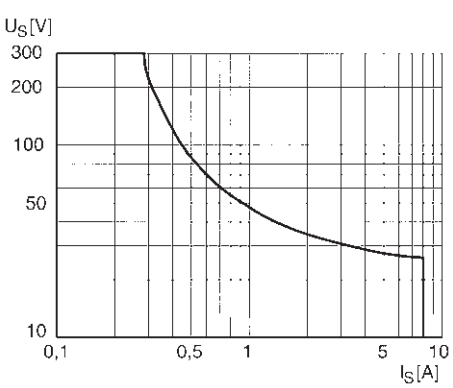

electronics

Dimensions

WEG-REL-1S 250 V 3 A

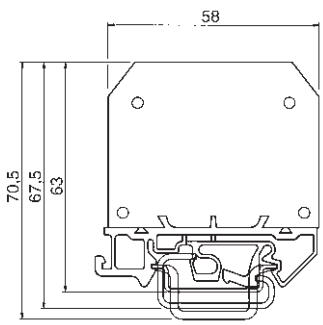

WEG-REL-1W 250 V 5 A and WEG-REL-2W 250 V 4 A

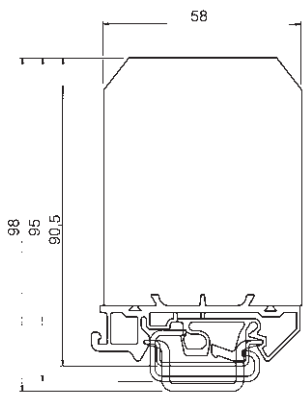

WEG-230-1S 250 V 1 A

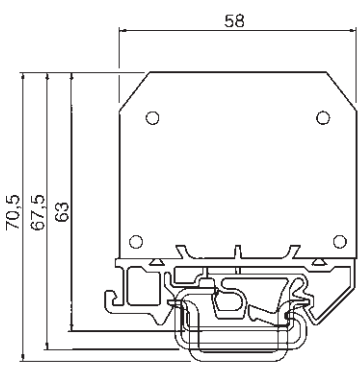

WEG-DUO-1W 250 V 3 A Current relay SR 4…20mA

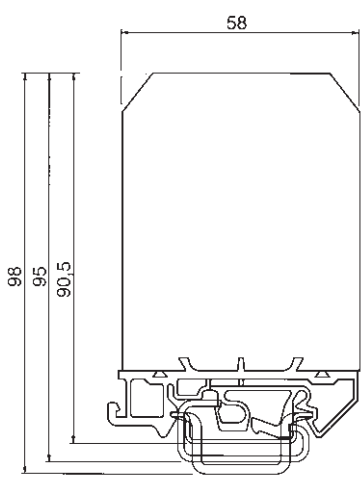

Wiring diagram Current relay SR 4...20 mA

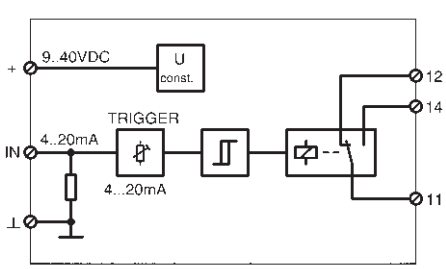

Subject to change without further notice

RAB

Wiring diagrams

R12-12V-1W 250 V 5 A

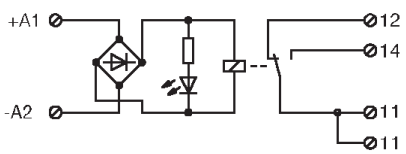

RAB – 1 Changeover contact (SPDT)

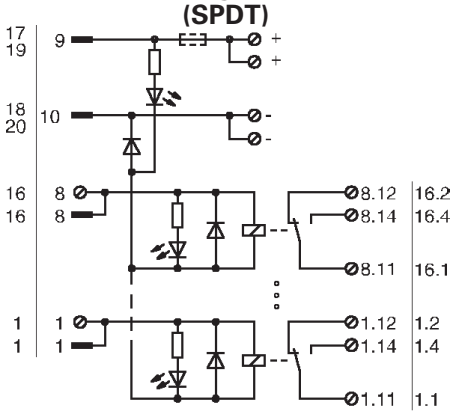

RAB – 2 Changeover contact (DPDT)

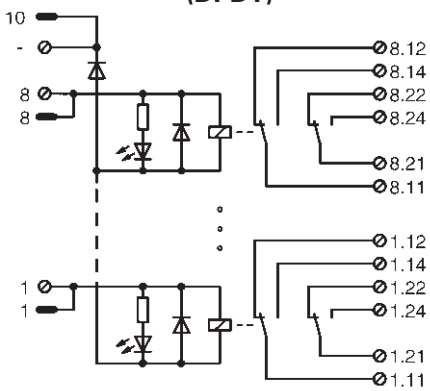

Derating

R12-12V-1W 250 V 5 A

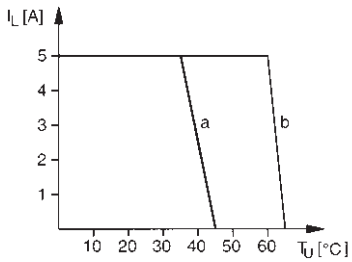

a = continuous operation
b = switching operation 50% duty cycle

RAB-FSS and RAB-SS

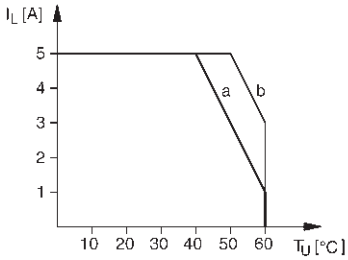

Dimensions

R12-12V-1W 250 V 5 A

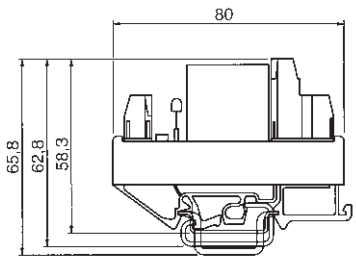

RAB – 1 Changeover contact (SPDT)

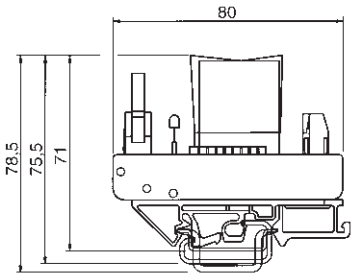

RAB – 2 Changeover contact (DPDT)

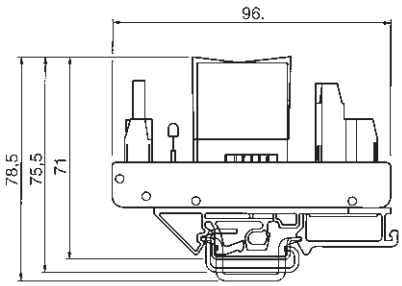

electronics

Relay modules

Wiring diagrams

WR1-230-1W 250 V 4 A

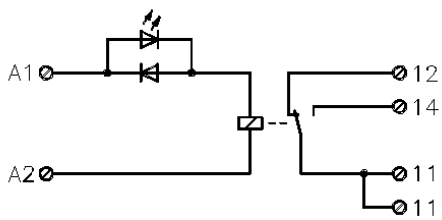

WR4/8-115-1W 250 V 4 A

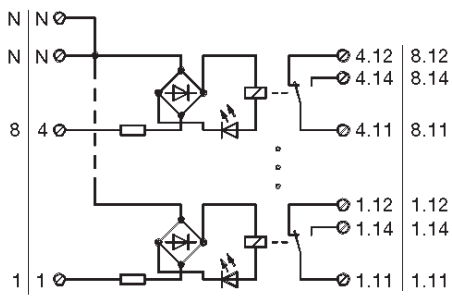

WR4/8-230-1W 250 V 4 A

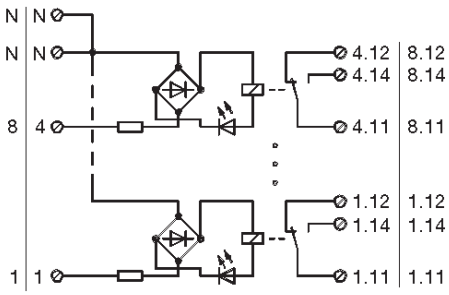

WR1-DUO-2W 250 V 5 A

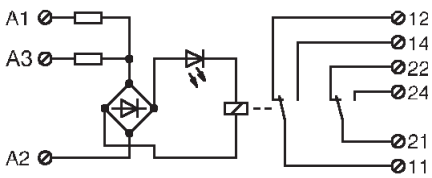

WR4/8-115-2W 250 V 4 A

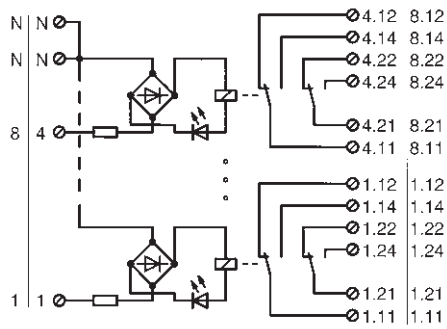

WR4/8-230-2W 250 V 4 A

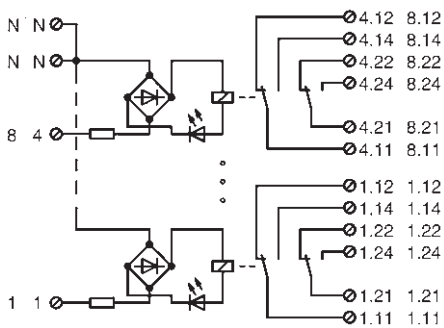

Subject to change without further notice

Derating

WR1 – 1 Changeover contact (SPDT)

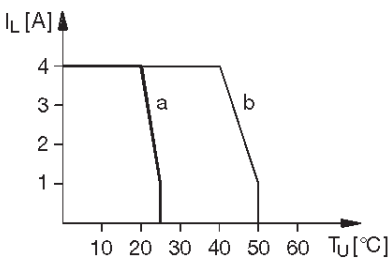

a = side by side without spacing
b = side by side with spacing of 5 mm

WR1 – DUO

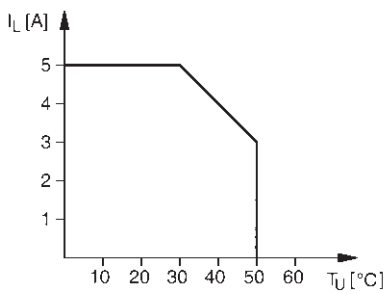

WR4/WR8 – 2 Changeover contact (DPDT)

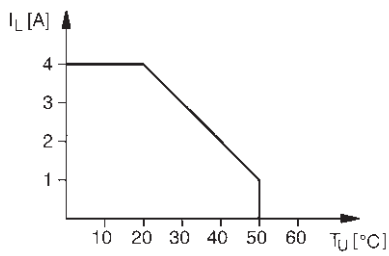

Dimensions

WR1 – 1 Changeover contact (SPDT)

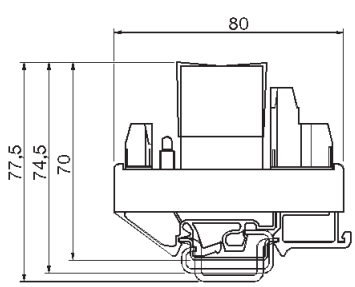

WR4/WR8 – 1 Changeover contact (SPDT)

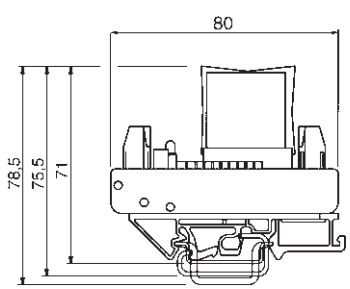

WR1 – DUO

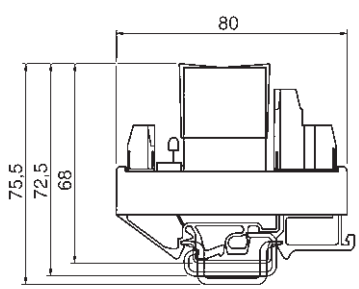

WR4/WR8 – 2 Changeover contact (DPDT)

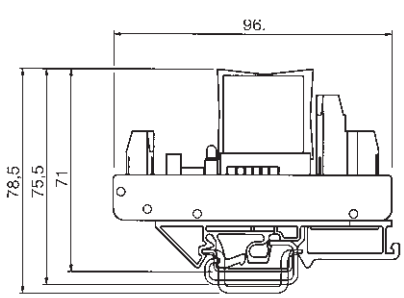

electronics

Wiring diagrams of relay couplers

WRS-REL-1S 250 V 5 A

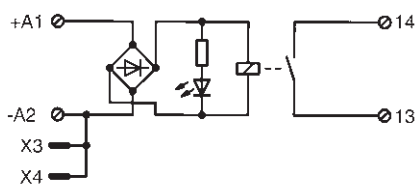

WRS-REL-1W 250 V 5 A

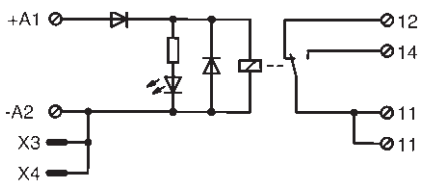

WRS-REL-2W 250 V 5 A

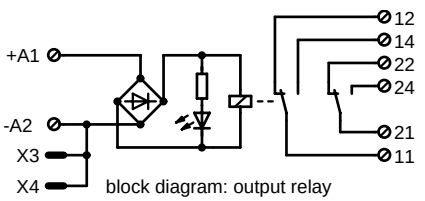

WRS-REL-1W 250 V 16 A

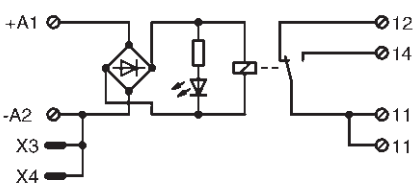

Dimensions

WRS-REL-1S 250 V 5 A
WRS-REL-1W 250 V 16 A

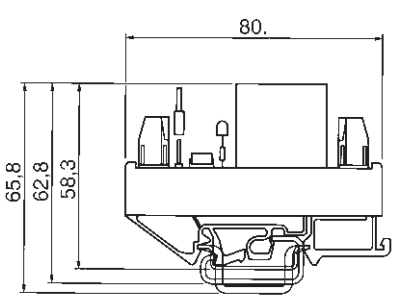

WRS-REL-1W 250 V 5 A
WRS-REL-2W 250 V 5 A

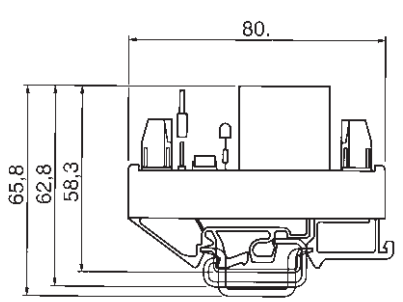

Subject to change without further notice

Derating

WRS-REL-1S 250 V 5 A
WRS-REL-1W 250 V 5 A

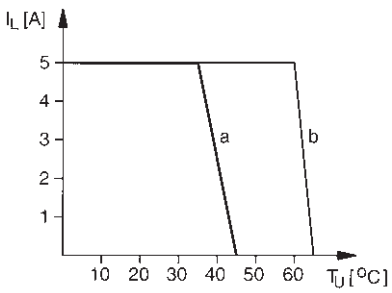

a = side by side without spacing
b = side by side with spacing > 20 mm

Contact loading:

WRS-REL-1S 250 V 5 A
WRS-REL-1W 250 V 5 A
WRS-REL-2W 250 V 5 A

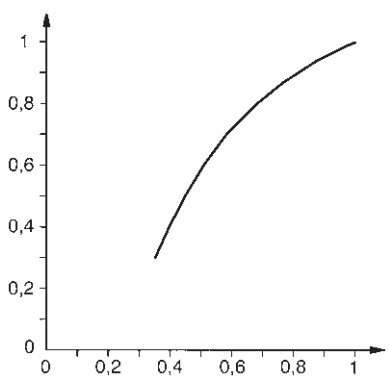

Limit curve:

WRS-REL-1S 250 V 5 A
WRS-REL-1W 250 V 5 A
WRS-REL-2W 250 V 5 A

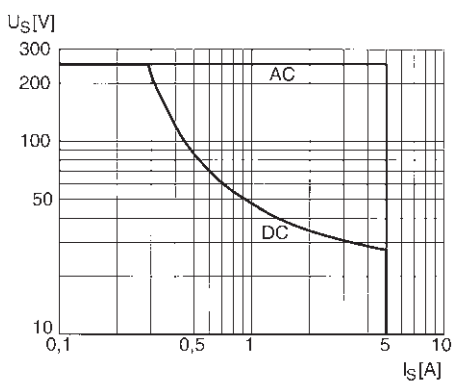

D.C. limit curve and derating curve:
WRS-REL-1W 250 V 16 A

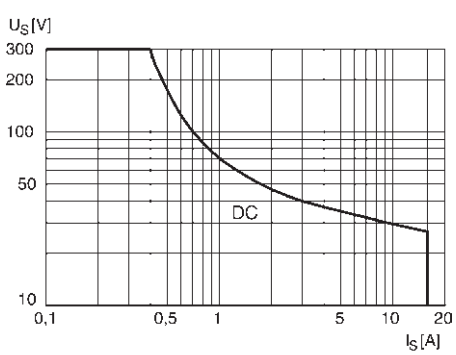

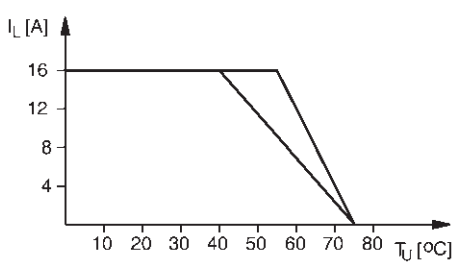

a = side by side without spacing
b = side by side with spacing of 5 mm

flare

Block diagrams of *flare* timer relays

Multifunction

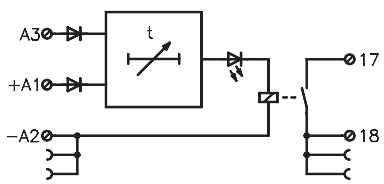

On delay

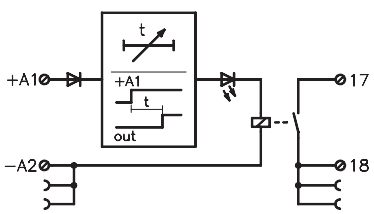

Derating: Timer relays

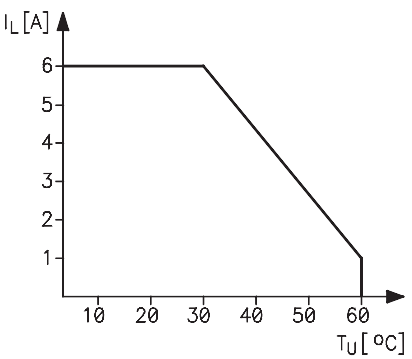

Setting the type of function

Function	DIP-Switch 1	2	3
on delay	on	on	on
Single Shot	on	off	on
Cycle on pulsing	on	on	off
Cycle off pulsing	on	off	off
off delay	off	off	off

Setting the time ranges

timer range ± 20% t min	t max	DIP-Switch 4	5
0.1	1.2 sec	off	on
0.4	5 sec	on	off
3.5	40 sec	on	on
30	300 sec	off	off

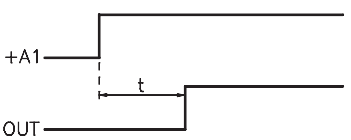

on delay

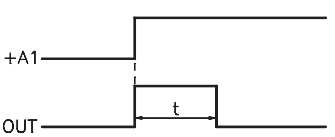

Single Shot

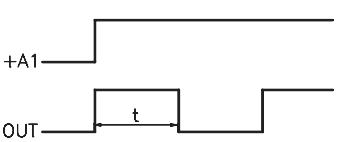

Cycle on, pulsing

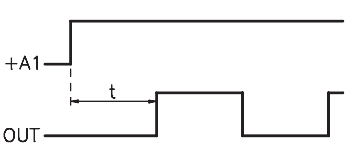

Cycle off, pulsing

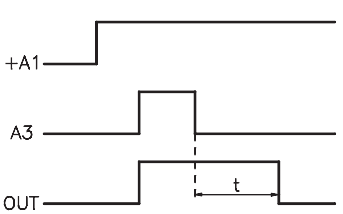

off delay

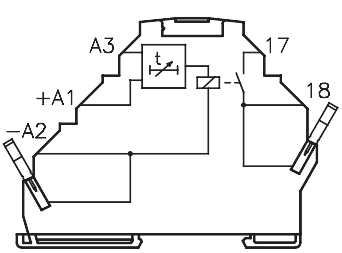

Terminal assignment: Timer relay

Subject to change without further notice

WRS

Block diagram of multi function *WRS* timer relays

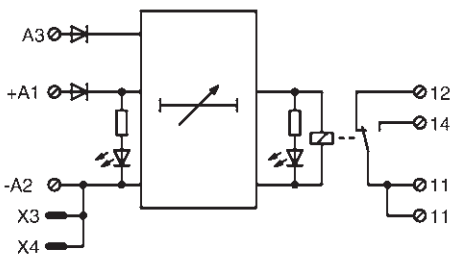

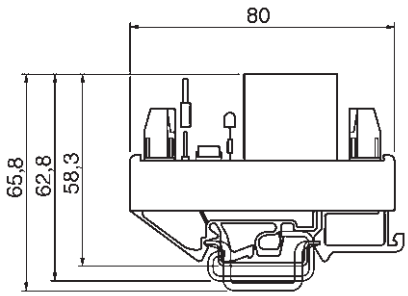

Setting the type of function

Function	DIP-switch 1	2	3
on delay	on	on	on
Single Shot	on	on	on
Cycle on, pulsing	off	on	off
off delay	off	off	off

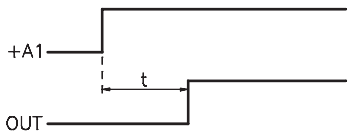

on delay

Setting the time ranges

timer range ± 20% t min	t max	DIP-switch 4	5
0.1	1 sec	off	on
0.4	4 sec	on	off
3	30 sec	on	on
25	255 sec	off	off

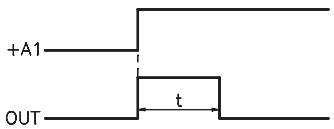

Single shot

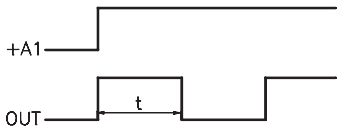

Cycle on, pulsing

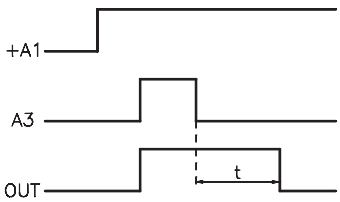

off delay

electronics

Relay modules
Solid state relays

flare

Wieland solid-state relay modules, the powerful addition

Solid-state relays are used in the same way as electromechanical relays as a connecting element between field devices and electronic control and signalling equipment. These modules can offer additional functionalities to the switching tasks that are required during processing. The core characteristics of the solid-state relays are:

- ❒ High switching frequencies up to several kHz
- ❒ Almost unlimited service life due to lack of mechanics
- ❒ Insensitive to vibrations and impulse loads
- ❒ Bounce-free and noise-free switching
- ❒ Control power in the lower mW range

Wieland offers a full range of solid state relay modules with the properties outlined above. Depending on the required applications, a superior selection of relay modules are available with various operating voltages, output arrangements and housings.

Product ranges:

flare, Solid-state relays with an overall width of 6.2 mm with input voltages of 24 V DC up to 230 V AC and switching currents up to 2 A.

WRS, Solid-state relays in a mounting base with input voltages of 24 V DC up to 230 V AC and switching currents up to 6 A.

M-PB, Plug-in, one- to eight-channel solid-state relays in a mounting base with input voltage voltages of 24 V DC up to 230 V AC and switching currents up to 3 A.

Overview of the technical data

Input circuit/control side

Wieland solid-state relays can be controlled with direct or alternating voltage, depending on their type. Each of the modules contains a suppression circuit against polarity reversal and an LED for status display in the input circuit.

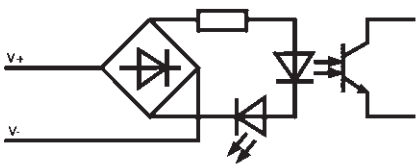

Block diagram of DC input

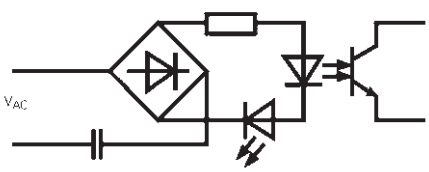

Block diagram of AC input

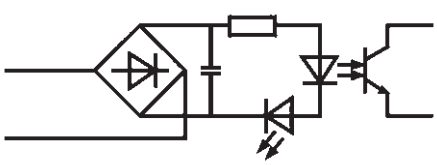

Block diagram of AC/DC input

To ensure safe operation of the relay the residual voltage in the control circuit must not exceed 5% DC or 15% AC of this operating voltage as specified in VDE 0435.

Output circuit/loadside

A solid-state relay for either DC or AC loads can be selected depending on the application. Also with DC outputs there are 2 types of connection available.

- ❒ 2 wire output
- ❒ 3 wire output, with negative switching

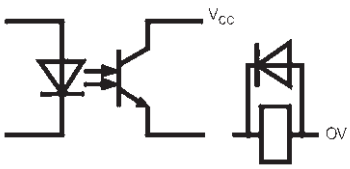

Block diagram of 2 wire output

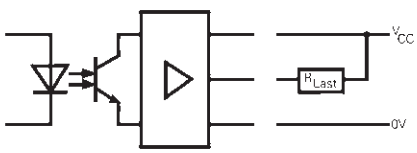

Block diagram of 3 wire output

To guarantee error-free operation it is important to select a relay with a rating that meets the voltage and current requirement and also to add a protective circuit to the output as shown in the block diagram above - such as a varistor or RC element.

If a solid-state relay is operated with an inductive load, the load must be equipped with a protective suppression circuit such as a free-wheeling diode. In all cases, it must be ensured that the protection level of the protective device lies below the respective off-state voltage of the relay.

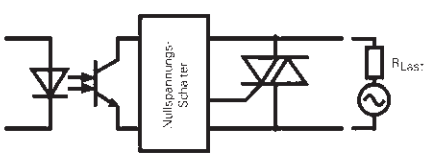

Block diagram of AC output

Solid state relays for the AC loads incorporate a triac as the switching element. A triac is a zero voltage switch and is used to avoid high inrush and back EMF peaks by connecting the load at zero voltage and disconnecting the load at zero current.

As for D.C. loads, care should be taken that the protection level of the protective measures lies below the off-state voltage of the Triac.

Relay modules
Solid state relays

flare

Overall width: 6.2 mm

Dimensions (mm): W x H x D
6.2 x 89 x 70

24 V DC / 48 V DC; 500 mA; 2 A
2 wire input/output
Approvals: UL, CSA

115 V AC/DC / 48 V DC; 500 mA
2 wire input
Approvals: UL, CSA

Description	Screw terminal	Spring clamp terminal	Std. pack	Screw terminal	Spring clamp terminal	Std. pack
24 V DC, 500 mA		80.020.4100.0	10			
24 V DC, 2 A		80.020.4101.0	10			
115 V AC/DC					80.020.4102.0	10
230 V AC						
Wiring diagram, derating curve, limit curve	**See page 488–489**			**See page 488–489**		
Control side	**Input**	**Output**				
Nominal input voltage	24 V DC	24 V DC		115 V AC/DC		
Voltage range "ON"	10 V...53 V DC	10 V...53 V DC		70 V...122 V AC/DC		
Voltage range "OFF"	0 V...5 V DC	0 V...5 V DC		0 V...30 V AC / 40 V DC		
Power consumption	ca. 6 mA	ca. 7 mA		ca. 3 mA		
Status display	LED Green	LED Green		LED Green		
Load side						
Nominal output voltage	48 V DC	48 V DC		48 V DC		
Min. switching voltage	4.4 V DC	4.4 V DC		4.4 V DC		
Max. switching voltage	53 V DC	53 V DC		53 V DC		
Min. switching current	1 mA	1 mA		0.1 mA		
Max. switching current	500 mA	2 A		500 mA		
On-state voltage	1.2 V DC	0.3 V DC		1.2 V DC		
Pickup delay	0.05 ms	4 ms		30 ms		
Dropout delay	0.2 ms	8 ms		20 ms		
Switching frequency (resistive load)	500 Hz	10 Hz		10 Hz		
Suppression circuit	Suppressor diode	Suppressor diode		Suppressor diode		
General data						
Rated voltage						
Isolation voltage of input/output	3.75 kV	2.5 kV		3.75 kV		
Overvoltage category	III			III		
Degree of pollution	2			2		
Ambient temperature	0 °C up to 50 °C			0 °C up to 50 °C		
Storage temperature	–40 °C up to +55 °C			–40 °C up to +55 °C		
Protection type/mounting rail	IP 20 / TS 35			IP 20 / TS 35		
Norms/specifications	VDE 0160; VDE 0106 T101			VDE 0160; VDE 0106 T101		
Emitted interference/interference immunity	EN 61000-6-3; EN 61000-6-2			EN 61000-6-3; EN 61000-6-2		
Wire range of screw terminal	–			–		
Wire range of spring-clamp terminal	24 – 12 AWG			24 – 12 AWG		
finely stranded	0.14 mm^2 – 1.5 mm^2			0.14 mm^2 – 1.5 mm^2		
single core	0.5 mm^2 – 2.5 mm^2			0.5 mm^2 – 2.5 mm^2		
CSA Ex approval	Class I, Division 2, Groups A, B, C and D, T6			Class I, Division 2, Groups A, B, C and D, T6		
Accessories		Part no.			Part no.	
Plug-in jumper (U_{max} = 50 V, I_{max} = 2 A)		Z8.000.0200.8			Z8.000.0200.8	
8 digit marker tag, unmarked, 60 off		Z4.242.5153.0			Z4.242.5153.0	

Subject to change without further notice

flare

Overall width: 6.2 mm

Dimensions (mm): W x H x D
6.2 x 89 x 70

230 V AC / 48 V DC; 500 mA
2 wire input
Approvals: UL, CSA

24 V DC / 230 V AC; 500 mA
2 wire output triac
Approvals: UL, CSA

Description	Screw terminal	Spring clamp terminal	Std. pack	Screw terminal	Spring clamp terminal	Std. pack
24 V DC, 500 mA					80.020.4150.0	10
24 V DC, 2 A						
115 V AC/DC						
230 V AC		80.020.4103.0	10			
Wiring diagram, derating curve, limit curve	**See page 488–489**			**See page 488–489**		
Control side						
Nominal input voltage	230 V AC			24 V DC		
Voltage range "ON"	90...250 V AC			10 V...53 V DC		
Voltage range "OFF"	0...40 V AC			0 V...5 V DC		
Power consumption	ca. 7.5 mA			ca. 6 mA		
Status display	LED Green			LED Green		
Load side						
Nominal output voltage	48 V DC			230 V AC		
Min. switching voltage	4.4 V DC			12 V AC		
Max. switching voltage	53 V DC			250 V AC		
Min. switching current	0.1 mA			0.1 mA		
Max. switching current	500 mA			500 mA		
On-state voltage	1.2 V DC			1.4 V AC		
Pickup delay	30 ms			10 ms		
Dropout delay	20 ms			10 ms		
Switching frequency (resistive load)	10 Hz			20 Hz		
Minimum switchable voltage	Suppressordiode			Suppressordiode		
Suppression circuit	Suppressor diode			Suppressor diode		
General data						
Rated voltage						
Isolation voltage of input/output	3.75 kV			2,5 kV		
Overvoltage category	III			III		
Degree of pollution	2			2		
Ambient temperature	0 °C up to 50 °C			0 °C up to 50 °C		
Storage temperature	–40 °C up to +55 °C			–40 °C bis +55 °C	–40 °C up to +55 °C	
Protection type/mounting rail	IP 20 / TS 35			IP 20 / TS 35		
Norms/specifications	VDE 0160; VDE 0106 T101			VDE 0160; VDE 0106 T101		
Emitted interference/interference immunity	EN 61000-6-3; EN 61000-6-2			EN 61000-6-3; EN 61000-6-2		
Wire range of screw terminal	–			–		
Wire range of spring-clamp terminal	24 – 12 AWG			24 – 12 AWG		
finely stranded	0.14 mm² – 1.5 mm²			0.14 mm² – 1.5 mm²		
single core	0.5 mm² – 2.5 mm²			0.5 mm² – 2.5 mm²		
CSA Ex approval in range	Class I, Division 2, Groups A, B, C and D, T6			Class I, Division 2, Groups A, B, C and D, T6		
Accessories		Part no.			Part no.	
Plug-in jumper (U_{max} = 50 V, I_{max} = 2 A)		Z8.000.0200.8			Z8.000.0200.8	
8 digit marker tag, unmarked, 60 off		Z4.242.5153.0			Z4.242.5153.0	

electronics

Relay modules
Solid state relays

WRS

– 24 V Input signals
– 2.5-kV separation between I/O at a creepage and clearance distance of 8mm

	24 V / 60 V DC / 3 A **2 wire output** Approvals: cULus, CSA 12.5 x 80 x 64			**24 V / 60 V DC / 5 A** **2 wire output** Approvals: cULus, CSA 12.5 x 80 x 59		
Dimensions (mm): W x H x D						
Description	Type	Part no.	Std. pack	Type	Part no.	Std. pack
Wieland relay system	WRS-SSDC-60V3A	80.020.2003.0	10	WRS-SSDC-60V5A	80.020.2004.0	10
Wiring diagram, derating curve, limit curve	**See page 490**			**See page 490**		
Control side						
Operating voltage	24 V DC +10%/–15%			24 V DC +10%/–15%		
Nominal input current per input	16 mA			16 mA		
Power comsumption	0.4 W			0.4 W		
Parallel connection of max	20 Relays			20 Relays		
Load side						
Nominal switching voltage	24 V DC			24 V DC		
Maximum switching voltage	60 V DC			60 V DC		
Minimum switching voltage	3 V DC			3 V DC		
Effective on-state voltage	1.5 V DC at I_{Nenn}			0.5 V DC		
Maximum effective current	3 A DC (Derating)			5 A DC		
Minimum effective current	20 mA			0 mA		
Maximum impulse current	5 A DC (1 sec.)			60 A DC (10 ms)		
Maximum residual current	1 mA at 60 V DC			1 µA DC		
Fusing, note I^2t value	–			FF		
Internal Suppression circuit	Z-Diode 68 V / 5 W			–		
Maximum pickup/dropout delay	100 µs			1 ms		
Maximum switching frequency	1 kHz			100 Hz		
Isolation voltage of input/output	4 k $V_{eff.}$			2.5 $kV_{eff.}$		
Capacity of input/output	8 pF			15 pF		
Overvoltage category						
Degree of pollution						
Ambient temperature	–25 °C...Derating			–20 °C...Derating		
Storage temperature	–25 °C...+85°C			–25 °C...+85°C		
Mounting rail	TS 32 or TS 35			TS 32 or TS 35		
Norms/specifications						
Emitted interference/interference immunity						
Wire range, finely stranded/single core	0.5 mm^2 – 2.5 mm^2 / 0.5 mm^2 – 4 mm^2 / 22 – 12 AWG			0.5 mm^2 – 2.5 mm^2 / 0.5 mm^2 – 4 mm^2 / 22 – 12 AWG		
Location of mounting rail	horizontal			horizontal		
Accessories						
Plug-in jumper		Z8.000.0103.4	10		Z8.000.0103.4	10

Subject to change without further notice

WRS

– 24 V DL Input Signal

Dimensions (mm): W x H x D	**24 V DC / 250 V AC / 4 A** **2 wire output** Approvals: c(UL)us, CSA 12.5 x 80 x 56			**24 V DC / 250 V AC / 6 A** **2 wire output** Approvals: CSA 25.6 x 80 x 70		
Description	Type	Part no.	Std. pack	Type	Part no.	Std. pack
Wieland relay system	WRS-SSAC1-250 V4A	80.020.2001.0	10	WRS-SSAC1-250 V6A	80.020.0004.0	5
Wiring diagram, derating curve, limit curve	**See page 490–491**			**See page 490–491**		
Control side						
Operating voltage	24 V DC +10%/–15%			24 V DC +15%/–15%		
Nominal input current per input	20 mA			15 mA		
Power consumption	0,5 W			0.4 W		
Parallel connection of max	20 Relays			20 Relays		
Load side						
Nominal switching voltage	250 V AC			24 V–250 V AC		
Maximum switching voltage	280 V AC					
Minimum switching voltage	48 V AC					
Peak off-state voltage	1200 Vs			600 Vs		
Critical rate of rise of voltage	500 V/µs			500 V/µs		
Effective on-state voltage	1.4 V			1.6 V		
Maximum effective current	4 A AC			6 A AC		
Minimum effective current	60 mA			60 mA		
Maximum impulse current	250 A AC (20ms)			10 A AC		
Maximum residual current	0.1 mA			0.1 $mA_{eff.}$		
Power factor φ	> 0,5			> 0,5		
Zero sequence voltage switch	yes			yes		
I^2t value	260 A^2s			260 A^2s		
Fusing, note I2t value	FF			FF		
Suppression circuit				Varistor		
Maximum pickup/dropout delay	10 ms			100 ms		
Maximum switching frequency	15 Hz			15 Hz		
Isolation voltage of input/output	4 $kV_{eff.}$			4 $kV_{eff.}$		
Capacity of input/output	10 pF			10 pF		
Overvoltage category						
Degree of pollution						
Ambient temperature	–25 °C...Derating			–25 °C...Derating		
Storage temperature	–25 °C...+85°C			–25 °C...+85°C		
Mounting rail	TS 32 or TS 35			TS 32 or TS 35		
Norms/specifications						
Emitted interference/interference immunity						
Wire range, finely stranded/single core	0.5 mm^2 – 2.5 mm^2 / 0.5 mm^2 – 4 mm^2/ 22 – 12 AWG			0.5 mm^2 – 2.5 mm^2 / 0.5 mm^2 – 4 mm^2/ 22 – 12 AWG		
Location of mounting rail	horizontal			horizontal		
Accessories						
Plug-in jumper		Z8.000.0103.4	10		Z8.000.0103.4	10

Relay modules
Module boards

M-PB

Relay module boards
– 1 relay
– 4 relay
– 8 relay

The module boards are supplied without solid-state relays or miniature fuses

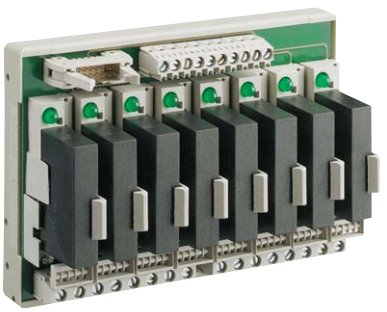

Dimensions (mm): W x H x D

	Module board 1 relay 26 x 96 x 70,3			Module board 4/8 relays 70/138 x 96 x 70,3		
Description	Type	Part no.	Std. pack	Type	Part no.	Std. pack
1 relay module boards	M-PB 1 SR	87.220.1353.3	2			
4 relay module boards				M-PB 4 SP	87.220.0753.3	1
8 relay module boards				M-PB 8 SP	87.220.0853.3	1
Wiring diagram, derating curve, limit curve	**See page 492–493**			**See page 492–493**		
Switching variations						
Input without positive/negative switching	+ / –					
Output with positive/negative switching	+ / –			+		
Caution: Please allow for the voltage drop at the LED						
Switching behaviour						
See technical data of input/output relays						
on pages 478 to 481						
General data						
Voltage drop at the LED	2 V			2 V		
Ambient temperature	–30 °C...+40 °C			–30 °C...+40 °C		
Storage temperature	–25 °C...+85 °C			–25 °C...+85 °C		
IDC header DIN 41651	–			8 relay, 10 pole		
Miniature fuse holder	5 x 20 mm			5 x 20 mm		
Wire diameter of solid state relay connection	max 1.05 mm			max 1.05 mm		
Wire range, finely stranded/single core	0.5 mm^2 – 2.5 mm^2 / 0.5 mm^2 – 4 mm^2 / 22 – 12 AWG			0.5 mm^2 – 2.5 mm^2 / 0.5 mm^2 – 4 mm^2 / 22 – 12 AWG		
Mounting rail	TS 32 or TS 35					
Location of mounting rail	horizontal			horizontal		
Accessories						
Solid state relay input (See page 478)	M-IDC24	Z5.580.8100.0	10			
Solid state relay input (See page 478)	M-IAC24	Z5.580.7800.0	10			
Solid state relay output (See page 480)	ODC 3–32 V / 3–60 V	Z8.000.0169.8	10	ODC 3–32 V / 3–60 V	Z8.000.0169.8	10
Solid state relay output (See page 481)	ODC 3–32 V / 3–200 V	Z8.000.0169.9	10	ODC 3–32 V / 3–200 V	Z8.000.0169.9	10
Solid state relay output (See page 480)	OAC 3–32 V / 24–280 V	Z8.000.0156.9	10	OAC 3–32 V / 24–280 V	Z8.000.0156.9	10

Technische Änderungen vorbehalten

M-PB

The module boards are supplied without solid state relays or miniature fuses.

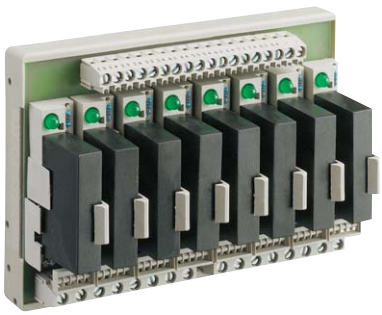

Important notice
In the case of multiple modules (2 changeover contacts), the outputs must be supplied from the same phase (e.g. L1)

Module board 4/8 relay

Dimensions (mm): W x H x D
70/138 x 96 x 70.3

Description	Type	Part no.	Std. pack
Module boards 1 relay			
Module boards 4 relay	M-PB 4 SG	87.220.1453.3	1
Module boards 8 relay	M-PB 8 SG	87.220.1553.3	1
Wiring diagram, derating curve, limit curve	**See page 492–493**		
Coil circuit			
Input without positive/negative switching	–		
Output with positive/negative switching	+ / –		
Caution: Please allow for the voltage drop at the LED			
Switching behaviour			
See technical data of input/relays			
on pages 478 to 481			
General data			
Voltage drop at the LED	2 V		
Ambient temperature	–30 °C...+40 °C		
Storage temperature	–25 °C...+85 °C		
IDC header DIN 41651	–		
Miniature fuse holder	5 x 20 mm		
Wire diameter of solid state relay connection	maximal 1,05 mm		
Wire range, finely stranded/single core	0.5 mm^2 – 2.5 mm^2 / 0.5 mm^2 – 4 mm^2 / 22 – 12 AWG		
Mounting rail	TS 32 or TS 35		
Location of mounting rail	horizontal		
Accessories			
Solid state relay input (See page 478)	M-IDC24	Z5.580.8100.0	10
Solid state relay input (See page 478)	M-IAC24	Z5.580.7800.0	10
Solid state relay output (See page 480)	ODC 3–32 V / 3–60 V	Z8.000.0169.8	10
Solid state relay output (See page 481)	ODC 3–32 V / 3–200 V	Z8.000.0169.9	10
Solid state relay output (See page 480)	OAC 3–32 V / 24–280 V	Z8.000.0156.9	10

electronics

Relay modules
Solid state relays

M-PB

For use with M-PB relay module boards

Dimensions (mm): W x H x D
10.2 x 26.3 x 43.2

Description	Type	Part no.	Std. pack	Type	Part no.	Std. pack
Solid state relay	M-IAC 24	Z5.580.7800.0	10	M-IDC 24	Z5.580.8100.0	10
Pin base input	**See page 483**			**See page 483**		
Pin base output	**See page 483**			**See page 483**		
Wiring diagram, derating curve, limit curve	**See page 492–493**			**See page 492–493**		
Control side						
Nominal operating voltage	240 V AC					
Maximum operating voltage	280 V AC/DC			32 V DC		
Minimum operating voltage	180 V AC/DC			3,3 V DC		
Nominal input current	5 mA AC			32 mA DC		
Breaking current	1.5 mA AC			1 mA DC		
Resistance	75 kΩ			1 kΩ		
Maximum voltage without reaction at output	50 V AC			2 V DC		
Maximum current without reaction at output	2 mA AC			1,5 mA DC		
Load side						
Nominal switching voltage	24 V DC			24 V DC		
Maximum switching voltage	30 V DC			30 V DC		
Minimum switching voltage	20 V DC			20 V DC		
Maximum current	16 mA DC			16 mA DC		
Leakage current	10 µA DC			10 µA DC		
Logic voltage	30 V DC			30 V DC		
Logic current	50 mA DC			50 mA DC		
Logic leakage current	10 µA DC			10 µA DC		
Logic voltage drop	200 mV DC			100 mV DC		
Maximum pickup/dropout delay	20 ms / 30 ms			1 ms / 1 ms		
Maximum switching frequency	10 Hz			1 kHz		
Mains frequency	47–63 Hz			–		
Isolation voltage of input/output	4 $kV_{eff.}$ (1 sec.)			4 $kV_{eff.}$ (1sec.)		
Capacity of input/output	8 pF			8 pF		
Overvoltage category						
Degree of pollution						
Ambient temperature	–30 °C...+40 °C			–30 °C...+40 °C		
Storage temperature	–40 °C...+100 °C			–40 °C...+100 °C		
Norms/specifications						
Emitted interference/interference immunity						
Accessories						
Pin base	See pin base on page 485			See pin base on page 485		

Subject to change without further notice

M-PB

Dimensions (mm): W x H x D
16.3 x 22.3 x 63.8

Pin base

Description	Type	Part no.	Std. pack	
Solid state relay				
Pin base input	SR-I5	Z1.000.4753.0	80	
Pin base output	SR-O4	Z1.000.9153.0	80	
Voltage	250 V AC			
Current	5 A AC			
Dimensions	**See page 492–493**			

electronics

Relay modules
Solid state relays

M-PB

For use with M-PB relay module boards

230 V AC / 3 A
2 wire output
10.2 x 25.9 x 43.2

60 V DC / 3 A
2 wire output
10.2 x 26.3 x 43.2

Dimensions (mm): W x H x D

Description	Type	Part no.	Std. pack	Type	Part no.	Std. pack
Solid state relay	OAC 3-32 V/24-280 V	Z8.000.0156.9	10	ODC 3-32 V/3-60 V	Z8.000.0169.8	10
Wiring diagram, derating curve, limit curve	**See pages 492–493**			**See pages 492–493**		
Coil circuit						
Operating voltage	3 – 32 V DC			3 – 32 V DC		
Nominal input current	1 – 22 mA			3 – 32 mA		
Minimum closing voltage	3 V DC			3 V DC		
Maximum opening voltage	1 V DC					
Maximum reverse voltage	6 V DC			6 V DC		
Resistance	1.5 kΩ			1 kΩ		
Switching behaviour						
Switching voltage	24 – 280 V AC			3 – 60 V DC		
Peak off-state voltage	600 Vs			60 V DC		
Critical rate of rise of voltage	100 V/µs			–		
Maximum effective on-state voltage	1.6 V			1,5 V		
Maximum effective current	3 A			3 A (5 A / 1 sec.)		
Minimum effective current	50 mA			–		
Maximum impulse current (20 ms)	90 Amp			–		
Maximum leakage current	5 mA			1 mA		
Power factor φ	≥ 0.5			–		
Zero sequence voltage switch	yes			–		
I^2t value	42 A^2s			–		
Fusing of solid state relay	FF 2.5 A			FF 2,5 A		
Fusing of load circuit	F 3.15 A			F 3,15 A		
Maximum pickup/dropout delay	11 ms			100 µs / 1 ms		
Maximum switching frequency	–			1 kHz		
Isolation voltage of input/output	4 $kV_{eff.}$			4 $kV_{eff.}$		
Capacity of input/output	8 pF			8 pF		
Overvoltage category						
Degree of pollution						
Ambient temperature	–20 °C...Derating			–40 °C...Derating		
Storage temperature	–40 °C...+100 °C			–40 °C...+100 °C		
Norms/specifications						
Emitted interference/interference immunity						
Accessories						
Pin base	See pin base on page 485			See pin base on page 485		

Subject to change without further notice

M-PB

Dimensions (mm): W x H x D
10.2 x 26.3 x 43.2

200 V DC / 1A
2 wire output

Description	Type	Part no.	Std. pack
Solid state relay	ODC 3-32 V/3-200 V	Z8.000.0169.9	10
Wiring diagram, derating curve, limit curve	**See pages 492–493**		
Coil circuit			
Operating voltage	3–32 V DC		
Nominal input current per input	3–32 mA		
Minimum closing voltage	3 V DC		
Maximum opening voltage	1 V DC		
Maximum reverse voltage	6 V DC		
Resistance	1 kΩ		
Switching behaviour			
Nominal switching voltage	3–200 V DC		
Peak off-state voltage	200 V DC		
Critical rate of rise of voltage	–		
Maximum effective on-state voltage	1.5 V		
Maximum effective current	1 A (2 A / 1 sec.)		
Minimum effective current	–		
Maximum impulse current	–		
Maximum residual current	1 mA		
Power factor φ	–		
Zero sequence voltage switch	–		
I^2t value	–		
Fusing, note I2t value	FF 2.5 A		
	F 1.25 A		
Maximum pickup/dropout delay	100 µs / 1 ms		
Maximum switching frequency	1 kHz		
Isolation voltage of input/output	4 $kV_{eff.}$		
Capacity of input/output	8 pF		
Overvoltage category			
Degree of pollution			
Ambient temperature	–40 °C...Derating		
Storage temperature	–40 °C...+100 °C		
Norms/specifications			
Emitted interference/interference immunity			
Accessories			
Pin base	See pin base on page 485		

electronics

Wiring diagrams: *flare* – Solid state relays

24 V/48 V DC; 500 mA; 2 A

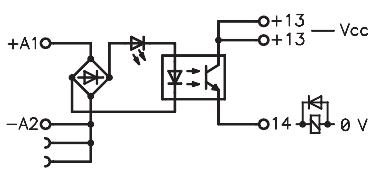

115 V AC/DC / 48 V DC; 500 mA

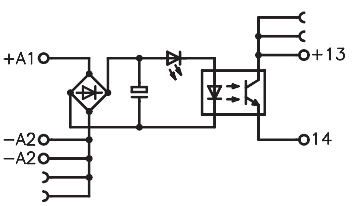

230 V AC / 48 V DC; 500 mA

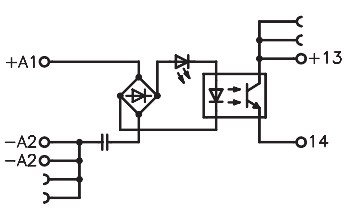

24 V DC / 230 V AC; 500 mA

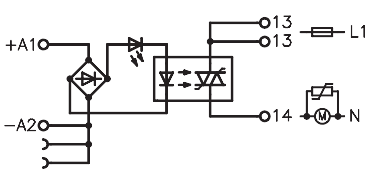

Derating: Solid State Relais

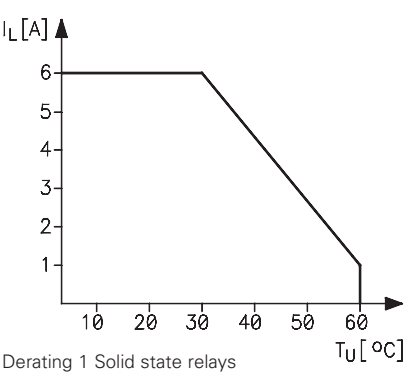

Derating 1 Solid state relays

Subject to change without further notice

Dimensions of *flare* – Relays

Housing with spring clamp terminals

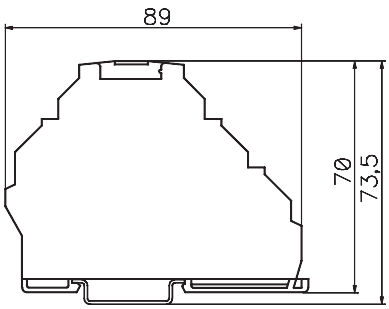

WRS Solid state relays

Wiring diagram

WRS-SSDC-60 V 3 A

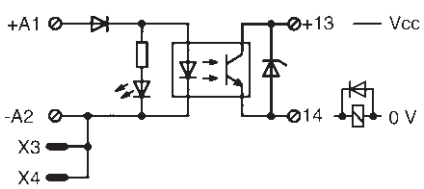

WRS-SSDC-60 V 5 A

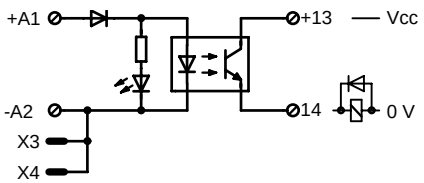

Derating

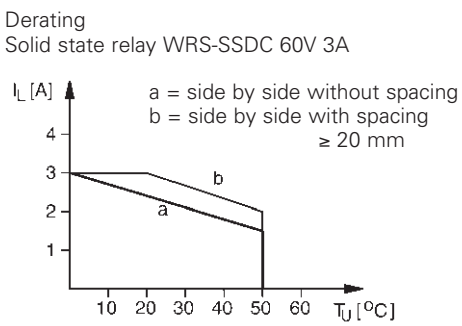

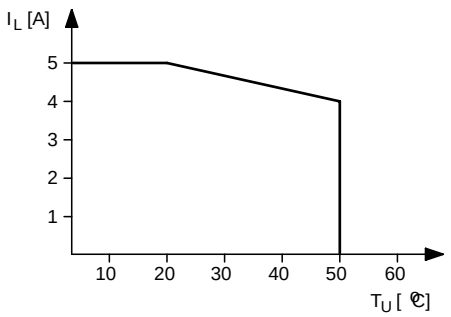

Dimensions

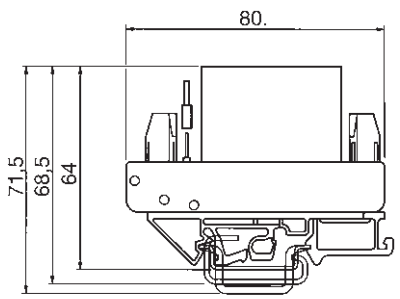

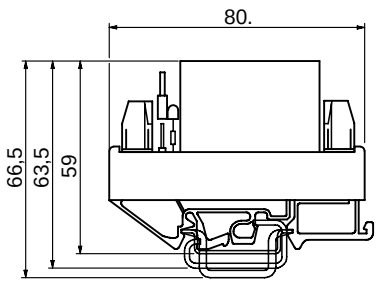

Subject to change without further notice

WRS

Wiring diagram

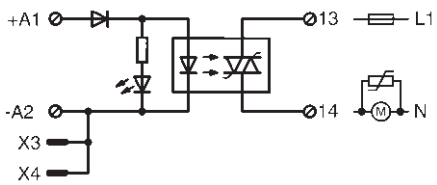

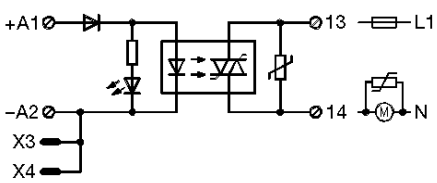

Derating

WRS-SSAC1-250 V 4 A

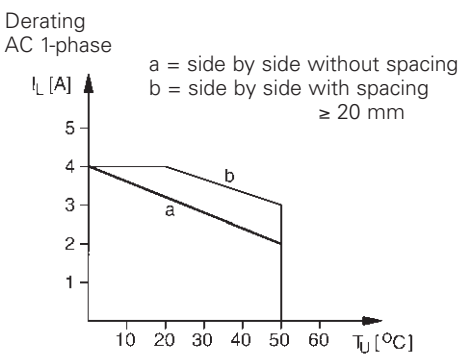

WRS-SSAC1-250 V 6 A

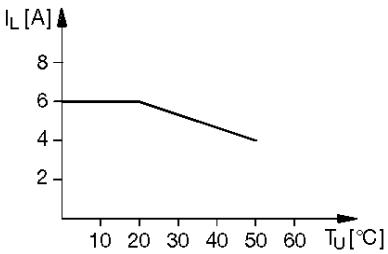

Dimensions

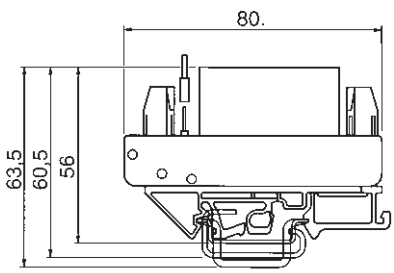

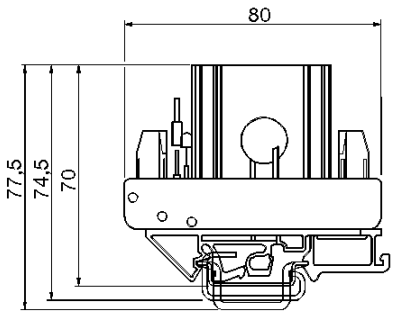

electronics

Wiring diagrams: M-PB module boards

M-PB 1SR

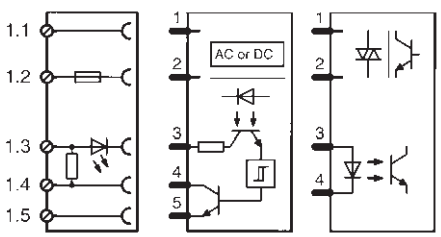

M-PB 4/8 SP

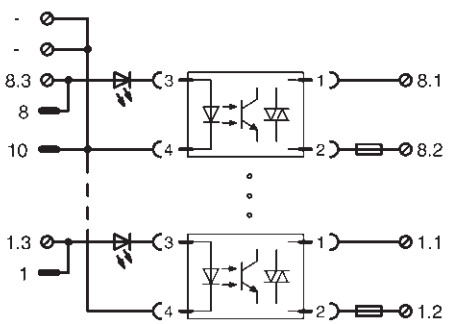

M-PB 4/8 SG

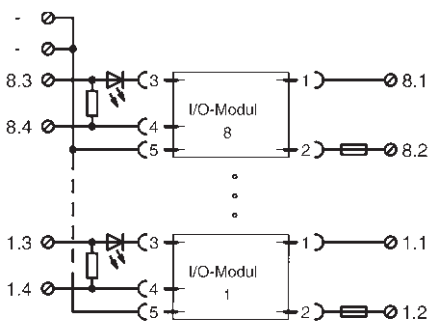

Dimensions of module boards

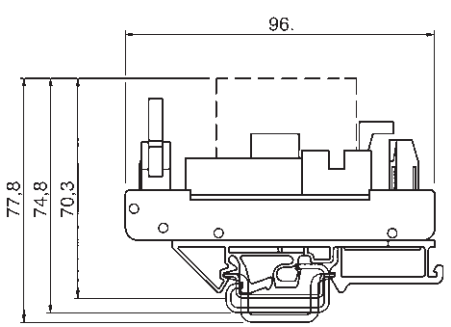

Wiring diagrams: M-PB Solid state relays

M-IAC 24

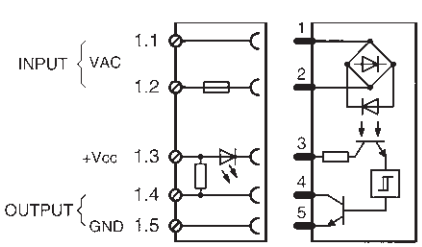

M-IDC 24

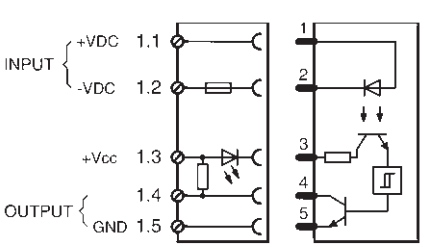

Dimensions

M-IAC 24 / M-IDC 24

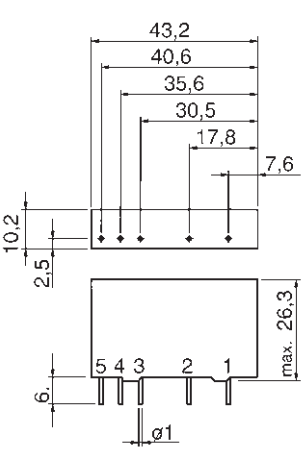

Subject to change without further notice

M-PB

Wiring diagrams + Derating: M-PB Solid state relays

OAC 3–32 V/24–280 V

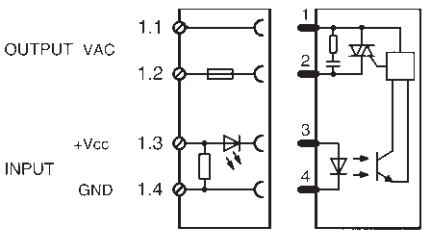

ODC 3–32 V/3–60 V

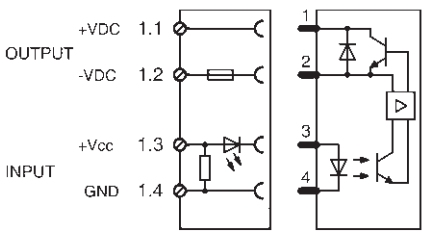

ODC 3–32 V/3–200 V

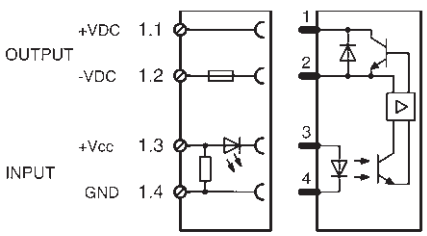

Derating

Output 230 V AC

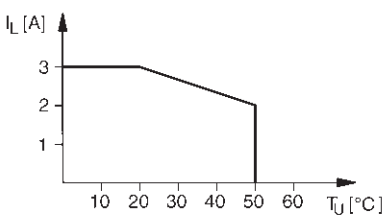

Output 60 V DC

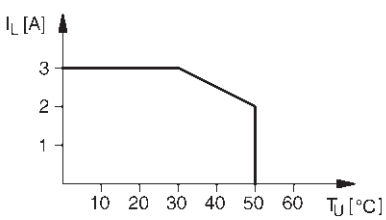

Output 200 V DC

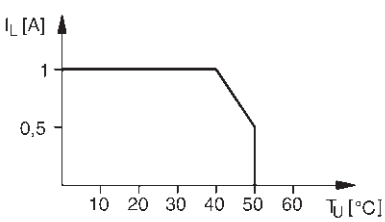

Dimensions

OAC 3–32 V/24–280 V

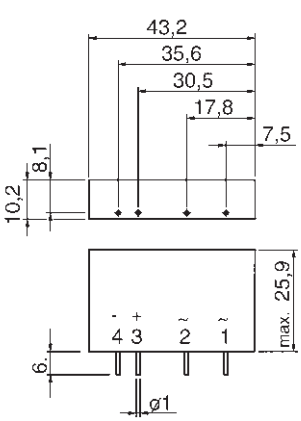

ODC 3–32 V/3–60 V
ODC 3–32 V/3–200 V

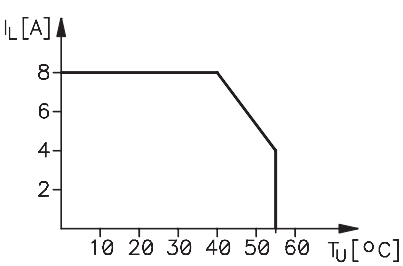

Pin base

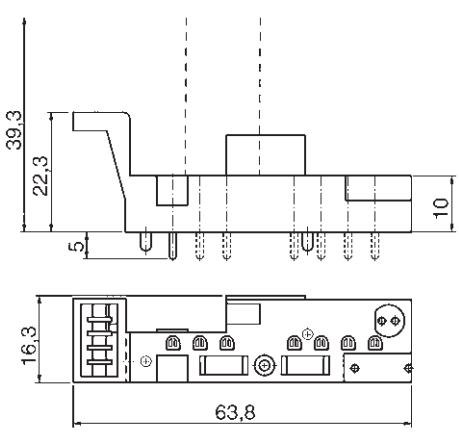

electronics

Analog measurement technology

analog

Pt100 (RTD)/TC
Sensor Amplifiers
Analog conversion module
Analog isolating module
Multifunctional signal conditioning
Measuring transducer with 3 way isolation
Isolating set point amplifiers
Isolating set point amplifiers – potential free
Constant voltage source

Analog measurement technology offers

- overall modules widths from 12,5 mm
- one modular system
- modules with screw and spring clamp terminals
- Isolating modules with 3 way isolation
- freely configurable modules
- freely adjustable input ranges for RTD Pt100/Pt1000
- modules with CJC compensation
- modules with "Smart Sense" function

All Wieland Components which require general certification are certified, and identified with the logo.

electronics

Electronic components

Analog measurement technology

Measurement and control technology

dipos

Wieland signal conditioners for measurement and control technology.

The basis of modern automation is the preparation and transfer of physical variables such as temperature, pressure, speed or humidity. These variables are recorded by sensors which use interfaces to simultaneously convert them into electrically measurable, standardised signals. The most frequently used signals are 1-5 V, 0 – 10 V, ±10 V, 0–20 mA and 4–20 mA. In the reverse, controller modules or control systems supply these standardised signals as variables for actuators and indicators. There is often a distance between the recording and processing sites, whereby the transmission link invariably lies in a hostile industrial environment.

Wieland signal conditioners offer a reliable solution for the transmission of these relatively weak signals. Resistive, inductive or capacitive interference or earth loops are ruled out due to advanced technology. They ensure that the analog standard signals are electrically isolated. The signal input and output are supplied by integrated DC/DC transformers which are electrically isolated from the mains.

Apart from isolation for standardised signals, temperature input modules for Pt100/RTD sensors and thermocouples are also available, with or without electrical isolation. All the modules are intended for installation on standard DIN rail.

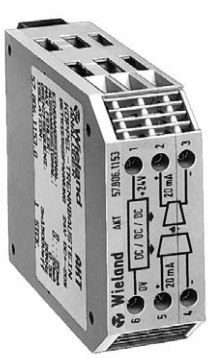

***dipos* signal conditiners offer the following benefits:**

- ❒ Overall widths from 12,5 mm
- ❒ Modular system
- ❒ Permanent wiring via plug-in modules
- ❒ Settings can be secured against unauthorised access via a sealed cover
- ❒ 4 kV insulation voltage
- ❒ 100% earth connection if required
- ❒ Signals or supply voltages can be jumpered
- ❒ Screw or spring-clamp terminals
- ❒ Labelling of individual channels as well as groups

Product ranges

AKB, AKT

Signal conditioners for standardised signals that can be mounted on TS 35 rails, electrically isolated or with 3-way isolation.

UET, dipos UET

Isolating set point amplifiers for generating threshold-dependent switching points. The respective threshold value is represented via an LC display, depending on the module. The measured input value is potential-free.

cores, dipos Pt

RTD Signal conditioner modules for Pt100, Pt1000 and Ni temperature sensors.

The following types are available:

- ❒ One temperature input range/one standard signal output
- ❒ Two defined temperature input ranges/two standard signal outputs, input and output characteristics can be freely selected
- ❒ Four freely selectable temperature input ranges/two standard signals output with or without detection of wire breakage
- ❒ Freely adjustable temperature input ranges via DIP switches and standard signal outputs
- ❒ Software configurable module for temperature input ranges and standard signals outputs

dipos TC

Temperature transformer isolator modules for thermocouple elements sensors of type J and K.

The following types are available:

- ❒ One temperature input range/one standard signal output
- ❒ Two defined temperature input ranges/two standard signal outputs, input and output characteristics can be freely selected

2, 3 or 4 wire connection technology for RTD/Pt sensors

The range provided by Wieland offers devices for all connection technologies. The appropriate technique is used, depending on the accuracy requirement. The individual measurement types are described in detail as follows.

The obvious benefit of a 2-wire connection lies in the minimum wiring costs. It should however be noted that greater errors can occur during measurement using this method. In the case of a Pt100 sensor, an additional resistance of only one ohm is sufficient for an error of 2.5°C. This error acts as an offset (zero displacement). This type of increase in resistance can be caused by cable resistances, contact resistances, soldered connections, plugs etc. In order to compensate for these errors, the Wieland modules offer a zero balance. This does not however prevent errors from occurring during operation that are caused by variations in the ambient temperature.

In practice, a 2-wire connection is only recommended if the application does not

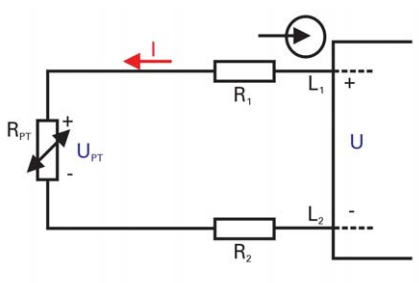

require a high level of accuracy.

In the case of a 3-wire connection, one of the sensor cables is used for measuring the cable and contact resistances. The influence of the additional resistances can thus be largely eliminated. This however only applies under one condition which is often not observed:

The resistances of the three cables and the respective connectors must match exactly.

A differential of 0.39 ohm already causes an error of 1 degree (Pt100). Only the respective state can be equalized by carrying out an adjustment during commissioning. It is not possible to

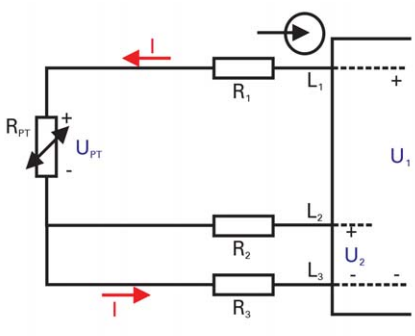

remedy the sources of error that are caused by temperature.

In the case of 4-wire technology, two cables take over the temperature measurement and two further cables measure at high resistance the voltage drop that arises via the resistance-type sensor.

All the effects caused by contact or cable resistances are fully eliminated.

The error is maximum 0.004% per ohm. There is practically no influence produced on the output variable. It is irrelevant if the resistances have different values and are subjected to different conditions due

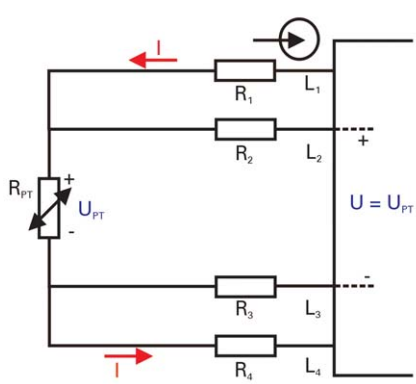

to the application.

Analog measurement technology
RTD (Pt100)/TC

dipos

The influence of the insulation resistance on the temperature measurement

The design of RTD sensors can lead to measuring errors. This is independent of the type and manufacturer. One of the most frequent sources of error is the insulation in the sensor. If it is not sufficient, it can seriously impair the measurement. Causes of a low-resistance insulation can be heat, vibration, physical, chemical or radioactive influences.

Measurement with Pt100

The Pt100 element is a low-resistance sensor. If the insulation resistance is too low, the measurement is influenced.

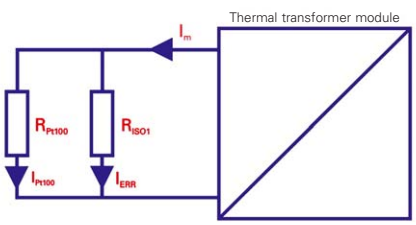

The diagram shows the electrical circuit diagram of the Pt100, connected to a RTD signal conditioner. Apart from the current flowing over the sensor, a minor current normally also flows over the insulation resistance R_{ISO1}. If the insulation resistance falls, the proportion that flows over the insulation resistance also naturally rises. Due to the constant current that is supplied by the RTD signal conditioner, the voltage drop is also reduced. This produces a measured temperature value that is too low, regardless of whether the RTD signal conditioner is operated with or without electrical isolation. During operation without electrical isolation, leakage current can however be caused between the sensor and earth if the insulation resistance is too low. This also leads to a lower temperature display. An isolated RTD signal conditioner rules this out.

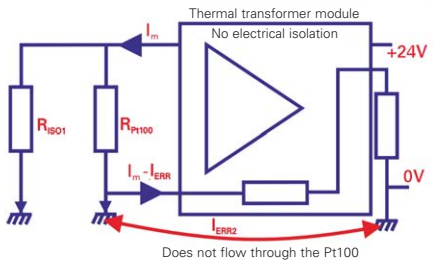

Measurement via thermocouples

Limited by the principle of the thermocouples, other errors arise due to the extremely small insulation resistances. The EMF (electromotive force) of thermocouples is not particularly susceptible in the event of a low insulation resistance. The problem lies in the fact that a new measuring point occurs due to the low insulation resistance. If this measuring point is found in the vicinity of the existing point, the influence is negligible. However, if it is located where there is a temperature differential to the measuring point, the measuring error can be considerable. As a

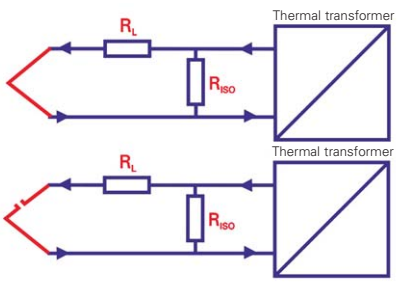

result, it is almost impossible to diagnose a break in the sensor.
The thermocouple signal conditioner ***dipos*** PROG is microprocessor-controlled and carries out measurements and checks beyond the standard. One of these checks is the display of the insulation resistance of the connected sensor. This function is called "Smart Sense". To implement this function, the sensor must be provided with an additional conductor. In the case of TC sensors, a special sensor is required which contains an additional conductor that is not used for temperature measurement.

Under certain conditions, it is possible to

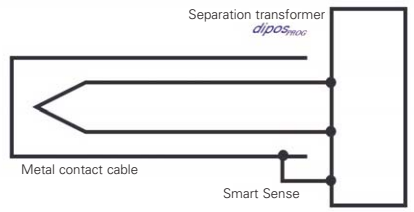

use the shield of the cable as the following diagram indicates:

An excessively low insulation resistance is indicated with a flashing LED at the module and the output signal is set to a preselected value. Smart sense not only monitors the sensor state but also the connections from the sensor to the thermal transformer module. This guarantees the complete control of the measuring point up to the thermocouple signal conditioner.

dipos

- Mounting width 12,5 mm
- 3 and 4 wire technology
- Current output can be toggled (0...20 mA and 4...20 mA)
- Adjustable zero/span
- Detection of wire breakage
- Overload signal at the output, red LED

Dimensions (mm) W x H x D
12.5 x 100 x 100

RTD Signal Conditiner for Pt100 sensors

Approvals: UL, CSA in preparation

Description	Output signal	Type	Part no.	Std. pack
dipos Pt100 RTD measuring transducer				
in 3 and 4 wire technology for Pt100 Sensors				
	0...10 V	3 wire	82.011.30XX.0	1
	0...10 V	4 wire	82.011.40XX.0	1
	0(4(*))...20 mA	3 wire	82.011.37XX.0	1
	0(4(*))...20 mA	4 wire	82.011.47XX.0	1
	0...10 V / 0(4(*))...20 mA	3 wire	82.011.38XX.0*	1
	0...10 V / 0(4(*))...20 mA	4 wire	82.011.48XX.0*	1
	(*) Supplied state			
Wiring diagram, dimensions		**See page 501**		
Technical data				
Measured input				
Input		Pt100 in accordance with IEC 60751		
Temperature ranges		–100...+100 °C / –50...+50 °C		
		0...100 °C / 150 °C / 200 °C / 300 °C / 400 °C / 500 °C		
Supply current (Pt100)		ca. 1 mA		
Measured output				
Output signal		0...10 V, 0(4)...20 mA		
Maximum load for voltage signal		5 mA		
Load for current signal		0...500 Ω (no load error)		
Output signal in event of wire breakage				
Voltage output:		ca. 13 V		
Current output:		ca. 26 mA		
Measuring accuracy				
Transmission error		≤ 0.2 % of final value (at 20 °C ambient temperature)		
Max. temperature co-efficient		100 ppm/K (ref. final value)		
Load error (deviation at 100 Ω load)		< 0.02 %/100 Ω		
Zero/span adjustment range		ca. 3 % Approx. of scope of measuring range		
General data				
Supply data		24 V DC +25 % / –20 %, polarised		
Power consumption		ca. 15 mA + output current		
Ambient temperature range		0...60 °C (100 % capacity utilisation of device, series connected		
Norms, specifications		DIN EN 50178, EMC guideline 89/336/EWG		
Isolation				
EMC				
Emitted interference		EN 60715/Kl. B, EN 61000-6-1, CISPR 222/Kl. B		
Interference immunity		EN 61000–4–2/3/4/5/6		
Accessories				
Module board, overall width of 12.5mm, 4 connections per side				
Screw terminal			80.060.0010.1	1
Spring clamp terminal			80.060.0011.1	1
Coding branch			Z5.563.0453.0	25
Plug-in jumper			Z8.000.0229.5	50
Large marker tag, white, blank			04.249.4053.0	500
Small marker tag				
red, blank			04.249.1053.0	500
blue, blank			04.249.1553.0	500
white, blank			04.249.2053.0	500

Part no. key for input temperature range		
XX =	01	0...100 °C**
	02	0...200 °C
	03	0...300 °C
	04	0...400 °C
	05	0...500 °C**
	20	–50...+50 °C**
	21	–100...+100 °C**
	31	0 ...150 °C
	40	–50...+50 °C(*) / –100...+100 °C
	41	0...100 °C(*) / 0...500 °C
Ordering example:		
Pt100 3 wire, Input 0...400 °C, Output 0...10 V		
Part no.	82.011.3004.0	
* versions only avalable with ** temperature ranges		

electronics

Analog measurement technology
TC

dipos

- Mounting width 12.5 m
- CJC incorporated
- Current output can be toggled (0...20 mA and 4...20 mA)
- Adjustable zero/span
- Detection of wire breakage
- Overload signal at the output, red LED

Dimensions (mm) W x H x D
12.5 x 100 x 100

Thermocouple Signal Conditioner Type J, K

Approvals: Ⓤ, CSA in preparation

Description	Output signal	Type	Part no.	Std. pack
***dipos* Signal Conditioner TC**				
for Type J and K thermocouples				
	0...10 V / 0(4(*))...20 mA	Type J	82.021.08XX.0	1
	0...10 V / 0(4(*))...20 mA	Type K	82.021.18XX.0	1
Wiring diagram, dimensions		**See page 501**		
Technical data				
Measured input				
Input		TypeJ (Fe-CuNi) or Type K (NiCr-Ni) in accordance with		
Temperature ranges		0...150/300/600/1200 °C		
Measured output				
Output signal		0...10 V, 0(4)...20 mA		
Maximum load for voltage signal		5 mA		
Load for current signal		0...500 Ω (no load error)		
Output signal in event of wire breakage				
Voltage output:		ca. 13 V		
Current output:		ca. 26 mA		
Measuring accuracy				
Transmission error		≤ 1 % of final value (at 20 °C ambient temperature)		
Transmission error for measuring range span ≤ 200K		≤ 2 % of final value (at 20 °C ambient temperature)		
Max. temperature co-efficient		200 ppm/K (ref. final value)		
Load error (deviation at 100 Ω load)		< 0,02 %/100 Ω		
CJC compensation		directly at the TC terminal		
Zero/span adjustment range		approx. 5 % Approx. of scope of measuring range		
General data				
Supply data		24 V DC +25 % / –20 %, polarised		
Power consumption		ca. 25 mA + output current		
Ambient temperature range		0...60 °C (100 % capacity utilisation of device, series connected)		
Norms, specifications		DIN EN 50178, EMC guideline 89/336/EWG		
EMV				
Emitted interference		EN 60715/Kl. B, EN 61000-6-1, CISPR 222/Kl. B		
Interference immunity		EN 61000–4–2/3/4/5/6		
Accessories				
Module board, overall width of 12.5mm, 4 connections per side				
Screw terminal			80.060.0030.1	1
Spring clamp terminal			80.060.0031.1	1
Coding branch			Z5.563.0453.0	25
Plug-in jumper			Z8.000.0229.5	50
Large marker tag, white, blank			04.249.4053.0	500
Small marker tag				
red, blank			04.249.1053.0	500
blue, blank			04.249.1553.0	500
white, blank			04.249.2053.0	500

Part no. key for input temperature range		
XX =	03	0...300 °C
	06	0...600 °C
	12	0...1200 °C
	31	0...150 °C

Ordering example:
TC Type K, Input 0...100 °C
Part no. 82.021.1812.0

Subject to change without further notice

dipos

RTD/Pt100

Block diagram

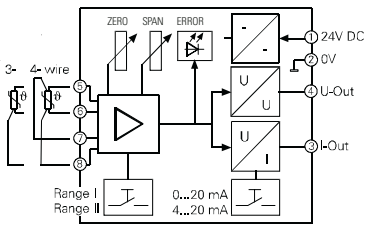

Dimension drawing

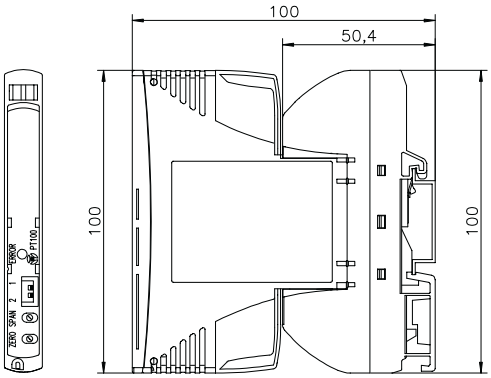

TC

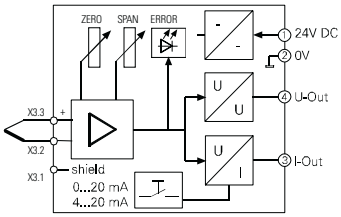

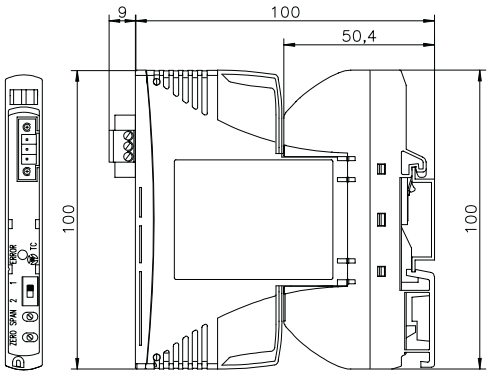

electronics

Analog measurement technology

RTD Signal Conditioner for Pt100

cores

Dimensions (mm) W x H x D
19 x 75 x 110.8

***cores* Pt100**

Approvals: UL, CSA

***cores* Pt100 with alarm output**

Approvals: UL, CSA

Description	Type	Part no.	Std. pack	Type	Part no.	Std. pack
RTD Signal Conditioner for Pt100	See reference key for ***cores*** Pt100		1	See reference key for ***cores*** Pt100		
Dimensions	**See page 510**			**See page 510**		
General data						
Operating voltage	24 V DC ±20%, polarised			24 V DC ±20%, polarised		
Typical power consumption	20 mA at 24 V and output current			20 mA at 24 V and output current		
Measured input						
Sensor	Pt100 DIN IEC 751			Pt100 DIN IEC 751		
Measured current	ca. 1 mA			ca. 1 mA		
Sensor connection technology (adjustable with DIP switch)	2, 3, 4 wire connection			2, 3, 4 wire connection		
Temperature measuring range (adjustable with DIP switch)	See reference key			See reference key		
Input protection	Protective diodes, RC filter			Protective diodes, RC filter		
Measured output						
Voltage signal	See reference key			See reference key		
Current signal	0...20 mA, 4...20 mA			0...20 mA, 4...20 mA		
Internal resistance (for voltage signal)	100 Ω			100 Ω		
Maximum permitted output load, load	0...500 Ω			0...500 Ω		
Output protection	Suppressor diode			Suppressor diode		
Switch output, short circuit proof						
Transistor switch output, positive switching				24 V DC, maximum 50 mA		
Peak short circuit current: typical	–			0.5 A		
maximum	–		–	1.2 A		
Setting range for switching threshold						
at output signal 0...20 mA	–		–	–2...+12 V		
at output signal 4...20 mA	–		–	0...+12 V		
Setting accuracy	–			±1% v. E.		
Setpoint with external voltmeter	–			Measuring pins behind front flap		
Measuring accuracy						
Intrinsic error at 20 °C ambient temperature	±0.4% v. E.			±0.4% v. E.		
Temperature coefficient	≤ 0,02 %/K			≤ 0.02 %/K		
Nominal load for current output	100 Ω			100 Ω		
Additional load error for current output	±0,02%/100 Ω load			±0.02 %/100 Ω load		
Typical zero/span adjustment range	±3% of scope of measuring range			±3% of scope of measuring range		
Operating ambient temperature at 24V	0 ...50 °C			0 ...50 °C		
Storage temperature	–25...+55 °C			–25...+55 °C		
Wire range:						
finely stranded	0.5 – 2.5 mm^2			0.5 – 2,5 mm^2		
single core	0.5 – 4 mm^2			0.5 – 4 mm^2		
Location of mounting rail TS35	horizontal			horizontal		
Emitted interference	61000-6-3			61000-6-3		
Interference immunity	61000-6-2			61000-6-2		
Accessories						
Marking tag for housing		04.244.1853.0	100		04.244.1853.0	100

Subject to change without further notice

cores

Temperature measuring range	S1	S2	S8
–50...+50 °C	off	off	on
0...100 °C	off	off	off
0...150 °C	on	off	off
0...200 °C	on	on	off

Current output	S3	S4
0...20 mA	on	off
4...20 mA	off	on

Input	S5	S6	S7
2 wire	off	on	on
3 wire	on	on	off
4 wire	off	off	off

Reference key for ***cores*** Pt100

82.010.XXXX.0

Temperature measuring rang
0 = ±50 °C
1 = 0–100 °C
2 = 0–150 °C
3 = 0–200 °C
4 = 0–300 °C
5 = 0–400 °C
6 = 0–500 °C

Output signal
00 = 0–10 V
04 = 0–20 mA
08 = 4–20 mA
02 = 0–10 V with switching output (Alarm)
06 = 0–20 mA with switching output (Alarm)
10 = 4–20 mA with switching output (Alarm)

Connectors for sensors
0 = 2-wire
1 = 3-wire
2 = 4-wire

Example of how to order:
Connector: 3 wire
Output: 0 – 10 V
Temperature measuring range:
0–100 °C
» » Part no.: 82.010.1001.0 « «

Caution: The part number determines the setting of the DIP switches within a variant.

They can be subsequently altered. But, care should be taken to ensure that the adjustment is within the parameters of the particular variant.

Functional overview

	Variant 1	Variant 2	Variant 3	Variant 4	Variant 5	Variant 6	Variant 7	Variant 8
Temperature ranges	± 50 °C 0–100 °C 0–150 °C 0–200 °C	± 50 °C 0–100 °C 0–150 °C 0–200 °C	0–300 °C 0–400 °C 0–500 °C	0–300 °C 0–400 °C 0–500 °C	± 50 °C 0–100 °C 0–150 °C 0–200 °C	± 50 °C 0–100 °C 0–150 °C 0–200 °C	0–300 °C 0–400 °C 0–500 °C	0–300 °C 0–400 °C 0–500 °C
Analog signal	0–10 V	0–20 mA 4–20 mA	0–10 V	0–20 mA 4–20 mA	0–10 V	0–20 mA 4–20 mA	0–10 V	0–20 mA 4–20 mA
Alarm output					yes	yes	yes	yes

Caution: Adjustment of the zero and span is required after every change of the DIP switches!

electronics

Analog measurement technology
Analog interface module

AKB

without electrical isolation

Application:
The Wieland interface modules AKB and AKT are used to transfer an analog measured value from one signal format to another.

Dimensions (mm) W x H x D
16.5 x 60.5 x 90.5

Analog interface module without electrical isolation
Approvals: UL, CSA

Std. pack		Part no.	Part no.	Part no.	Part no.
1	–10...+10 V	–	–	–	–
1	0...10 V	–	–	57.806.0053.0	57.806.1553.0
1	0...20 mA	–	57.806.0253.0	–	–
1	4...20 mA	–	57.806.0353.0	–	–
	Output	**–10...10 V**	**0...10 V**	**0...20 mA**	**4...20 mA**
Other signals on request		**Ordering example:**	*AKB* 20 mA / 10 V		
			57.806.0253.0		
Wiring diagram, sample application		**See page 510**			
Technical data					
Operating voltage		24 V DC ± 20%, polarised			
Typical power consumption (Output signal 20 mA)					
at 19 V DC					
at 24 V DC		ca. 12 mA + output current			
at 29 V DC					
Input					
Input resistance:					
for standard voltage		> 1 MΩ			
for standard current		49.9 Ω			
Maximum permitted input signal					
for standard voltage		60 V			
for standard current		70 mA (3,5 V)			
Voltage drop at 20 mA		1 V			
Input protection against voltage peaks		LC-Filter			
Output					
Output load:					
for maximum standard voltage		5 mA (RL ≥ 100 kΩ, see R_i)			
for standard current		0...500 Ω (load)			
Maximum load error (adjustment at 100 Ω)		0.02 % / 100 Ω			
Output protection against external voltage		Z-Diode			
Transfer procedure					
Static transmission error at 20 °C		< 0.2 % v. E.			
Temperature coefficient		< 0.015 %/K			
Effect of load impedance at current output		0.02 % / 100 Ω			
Limit frequency: (sinus 100%)					
at sinus 100%		20 kHz			
at ± 10 V		10 kHz			
Typical effect of frequency on transfer		1 % / kHz; 2°el / kHz			
Isolation					
All terminals to earth		2 $kV_{eff.}$			
Temperature range					
Operating temperature range for 24 V					
vertical installation without space		0 ...50 °C			
vertical installation with spacing of 20 mm		0 ...60 °C			
Storage temperature		–40...+85 °C			
Wire range		20 – 10 AWG			

Subject to change without further notice

AKT

with signal and supply isolation

Analog interface module with electrical isolation

Approvals: UL, CSA

Dimensions (mm) W x H x D
22.5 x 60.5 x 90.5

Std. pack		Part no.	Part no.	Part no.	Part no.
1	–10...+10 V	57.806.1053.0*	57.806.2253.0	57.806.5653.0	57.806.2153.0
1	0...10 V	57.806.2653.0	57.806.1053.0	57.806.0653.0	57.806.0953.0
1	0...20 mA	57.806.2753.0	57.806.0753.0***	57.806.1153.0**	57.806.1253.0
1	4...20 mA	57.806.5553.0	57.806.0853.0	57.806.1353.0	57.806.1153.0´
	Output	**–10...10 V**	**0...10 V**	**0...20 mA**	**4...20 mA**

Other signals on request	**Ordering example:**	*AKT* ±10 V / ±10 V	* contains transfer 0...10 V / 0...10 V
		57.806.1053.0	** contains transfer 4...20 mA / 4...20 mA
Wiring diagram, sample application			*** can also be used for –20...+20 mA / –10 V...+10 V

Technical data	**See page 510**
Operating voltage	24 V DC ± 20%, polarised
Typical power consumption (Output signal 20 mA)	
at 19 V DC	117 mA
at 24 V DC	88 mA
at 29 V DC	72 mA
Input	
Input resistance:	
for standard voltage	1 MΩ
for standard current	49.9 Ω
Maximum permitted input signal	
for standard voltage	60 V
for standard current	70 mA (3.5 V)
Voltage drop at 20 mA	1 V
Input protection against voltage peaks	LC-Filter
Output	
Output load:	
for standard voltage maximum	5 mA (RL ≥ 100 kΩ, see R_i)
for standard current	0...500 Ω (load)
Maximum load error (adjustment at 100 Ω)	0.02 % / 100 Ω
Maximum output ripple (2 output filters)	30 mV_S (40 kHz)
Output protection against external voltage	Z-Diode(n)
Transfer procedure	
Static transmission error at 20 °C	< 0.1 % v. E.
Temperature coefficient	< 0.02 % / K
Effect of load impedance at current output	0.02 % / 100 Ω
Limit frequency: (Sinus 100%)	20 kHz
at ± 10 V	10 kHz
Typical effect of frequency on transfer	1% / kHz; –2°el / kHz
Isolation	
Input / Output / Supply	3 x 1,5 $kV_{eff.}$ 1 min.
Input / Output / Supply	3 x 2,5 $kV_{eff.}$ 10 sec.
Input / Output / Supply	3 x 4 $kV_{eff.}$ 1,2/50 µs
All terminals to earth	2 $kV_{eff.}$
Temperature range	
Operating temperature range for 24 V	
vertical installation without space	0...50 °C
vertical installation with spacing of 20 mm	0...60 °C
Storage temperature	40...+85 °C
Wire range	20 – 10 AWG

electronics

Analog measurement technology
Isolating set point amplifier

UET

with 2 contact outputs

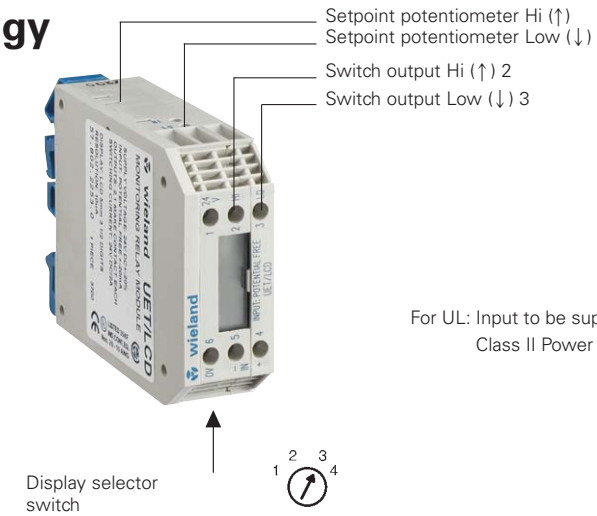

For UL: Input to be supplied from Listed Class II Power Supply

Important note for user:
The relay outputs must be supplied from the same phase (e.g. L1).

Caution:
Can only be mounted vertically due to the internal relays

Dimensions (mm) W x H x D
22,5 x 60,6 x 90,5

Isolating set point amplifier with LCD display or measuring points

Approvals: Ⓤ, CSA

Description	Type	Part no.	Std. pack	Type	Part no.	Std. pack
with measuring points	UET ±10 V*	57.802.1053.0	1			
				UET 20 mA**	57.806.1253.0	1
with LCD display	UET/LCD ±10 V*	57.802.2053.0	1			
				UET/LCD 20 mA**	57.802.2253.0	1
Versions with other input data available on request	*** contains standard signal 0...10 V**			**** contains standard signal 4...20 mA**		
Wiring diagram	**See page 513**			**See page 513**		
Technical data	**UET ±10 V**			**UET 20 mA**		
Operating voltage	24 V DC ±20%,polarised			24 V DC ±20%, polarised		
Power consumption at 24 V, 2 active relays	ca. 40 mA + output currents			ca. 40 mA +output currents		
Potential free input						
Measured input	±19.99 V			±19.99 mA		
Input resistance	1 MΩ			100 Ω		
Maximum permitted input signal	±50 V			±50 mA (±5 V)		
Input protection (interference suppression)	LC-filter			LC-filter		
Measuring points for external multimeter						
on measured input potential (for UET)	±1.99 V (acc. ±19,9 ±1.99measured signal)			±1.99 V (acc. ±19.9 V Measured signal)		
Digital display, LCD 3½ digit	with sign and dimension			with sign and dimension		
Character height	5 mm			5 mm		
Accuracy of display						
at 20 °C	±2 digit			±2 digit		
at 0...60 °C	±5 digit			±5 digit		
Display of range	±19.99 V			±19.99 mA		
Resolution	10 mV			10 µA		
Setpoint adjustment range	±19.99 V			±19.99 mA		
Switch outputs						
Switching voltage	24 V DC			24 V DC		
Maximum switching current	2 A			2 A		
Switching hysteresis	ca. ±20 mV			ca. ±20 µA		
Reproducibility of switching points	ca. ±10 mV			ca. ±10 µA		
Reaction time						
Pickup delay	7 ms			7 ms		
Dropout delay	5 ms			5 ms		
Contact	2 x 1 make contact (SPST, N. O.)			2 x 1 make contact (SPST, N. O.)		
Contact material	AgCdO + 1 µ Au			AgCdO + 1 µ Au		
Isolation						
input and supply	500 V DC			500 V DC		
contact and input	500 V DC			500 V DC		
contact and supply	–			–		
open contact	750 $V_{eff.}$			750 $V_{eff.}$		
Isolation against mounting rail	2 $kV_{eff.}$			2 $kV_{eff.}$		
Temperature range						
Operating temperature range, series connected at						
Vertical installation without spacing	0 ...50 °C			0 ...50 °C		
Vertical installation with spacing of 20 mm	0...60 °C			0...60 °C		
Storage temperature	–40...+85 °C			–40...+85 °C		

Subject to change without further notice

UET-P

with 2 potential free contact outputs

View from underneath

Position 1+4: Measured value/ actual value
Position 2: Setpoint "LO" (↓)
Position 3: Setpoint "HI" (↑)

Caution:
It is permitted to install the device vertically due to the relays

Dimensions (mm) W x H x D
29 x 60,6 x 90,5

For UL: Input to be supplied from Listed Class II Power Supply

Isolating set point amplifier, potential free with LCD display or measuring points

Approvals (UL), CSA

Description		Part no.	Std. pack	Part no.	Std. pack	Part no.	Std. pack
with measuring points	UET-P ±199 mV	57.802.1453.0	1				
	UET-P ±10 V*			57.802.1153.0	1		
	UET-P 20 mA**					57.802.1353.0	1
with LCD display	UET-P/LCD ±10 V*			57.802.2153.0	1		
	UET-P/LCD 20 mA**					57.802.2353.0	1
Versions with other input data available on request				*** contains standard signal 0...10 V**		**** contains standard signal 4...20 mA**	
Wiring diagram		**See page 513**		**See page 513**		**See page 5/111**	
Technical data		**UET-P ±199 mV**		**UET-P ±10 V**		**UET-P 20 mA**	
Operating voltage		24 V DC ±20%, polarised		24 V DC ±20%, polarised		24 V DC ±20%, polarised	
Power consumption at 24 V, 2 active relays		ca. 40 mA + output currents		ca. 40 mA + output currents		ca. 40 mA + output currents	
Potential free input							
Measured input		±19.99 mA		±19.99 mA		±19,99 mA	
Input resistance:		1 MΩ		1 MΩ		100 Ω	
Maximum permitted input signal		±50 V		±50 V		±50 mA (±5 V)	
Input protection (interference suppression)		LC-Filter		LC-Filter		LC-Filter	
Measuring points for external multimeter							
on measured input potential (for UET)		±1.99 V (acc. ±19,9 V measured signal)		±1.99 V (acc. ±19.9 V measured signal)		±1.99 V (acc. ±19.9 V measured signal)	
Digital display, LCD 3½ digit				with sign and dimension		with sign and dimension	
Character height				5 mm		5 mm	
Accuracy of display							
at 20 °C				±2 digit		±2 digit	
at 0...60 °C				±5 digit		±5 digit	
Display of range		±199,9 mV		±19.99 V		±19.99 mA	
Resolution		100 µV		10 mV		10 µA	
Setpoint adjustment range		±199,9 mV		±19.99 V		±19.99 mA	
Switch outputs							
Switching voltage		24 V DC / 230 V AC		24 V DC / 230 V AC		24 V DC / 230 V AC	
Maximum switching current		2 A DC / 1 A AC		2A DC / 1 A AC		2A DC / 1 A AC	
Switching hysteresis		ca. 200 µV		ca. 20 mV		ca. ±20 µA	
Reproducibility of switching points		±100 µV		±10 mV		ca.±10 µA	
Reaction time							
Pickup delay		7 ms		7 ms		7 ms	
Dropout delay		5 ms		5 ms		5 ms	
Contact		2 x 1 make contact (SPST, N. O.)		2 x 1 make contact (SPST, N. O.)		2 x 1 make contact (SPST, N. O.)	
Contact material		AgCdO + 1 µ Au		AgCdO + 1 µ Au		AgCdO + 1µ Au	
Isolation							
Input and supply		500 V DC		500 V DC		500 V DC	
Contact and input		1.5 $kV_{eff.}$		1.5 $kV_{eff.}$		1.5 $kV_{eff.}$	
Contact and supply		1.5 $kV_{eff.}$		1.5 $kV_{eff.}$		1.5 $kV_{eff.}$	
open contacts		750 $V_{eff.}$		750 $V_{eff.}$		750 $V_{eff.}$	
Isolation against mounting rail		2 $kV_{eff.}$		2 $kV_{eff.}$		2 $kV_{eff.}$	
Temperature range							
Operating temperature range, series connected at							
Vertical installation without spacing		0 ...50 °C		0 ...50 °C		0 ...50 °C	
Vertical installation with spacing of		0...60 °C		0...60 °C		0...60 °C	
Storage temperature		–40...+85 °C		–40...+85 °C		–40...+85 °C	

Analog measurement technology
Constant voltage source 10 V

dipos KSQ

- Overall width 12.5 mm
- Output voltage can be set between 9.5 V and 10.5 V
- Detection of wire breakage
  Overload signal at the output, red LED

Dimensions (mm) W x H x D
12.5 x 100 x 100

Constant voltage source
dipos$_{KSQ}$ 10 V
Approvals: UL, CSA in preparation

Description	Output signal	Type	Part no.	Std. pack
dipos KSQ **10 V Constant voltage source**		***dipos*** KSQ 10 V	82.081.0000.0	1
Wiring diagram, dimensions siehe Seite 513		**see page 513**		
Technical data				
Measured input				
Operating voltage U_V		24 V DC (16...30 V DC), polarised		
Power consumption at U_V = 24 V		approx. 10 mA + output current		
Measured output				
Output voltage		10 V DC constant, short circuit proof		
Setting range		9.5 V...10.5 V DC		
Permitted output load		0...30 mA		
Short-circuit current		approx. 50 mA		
Maximum residual ripple		10 mV_{SS}		
Output protection		Protective diodes		
Measuring accuracy				
Intrinsic error		± 0.1 % of final value (at UV = 24 V,		
		and 20 °C ambient temperature)		
Maximum temperature coefficient		150 ppm/K of final value		
General data				
Isolation		2 $kV_{eff.}$ (terminals to mounting rail)		
Ambient temperature range		0 °C...+60 °C (at U_V = 24 V)		
Storage temperature		–25 °C...+60 °C		
Transport temperature		–25 °C...+70 °C		
EMC				
Emitted interference		EN 55022/Kl. B, EN 61000-6-1, CISPR 222/Kl. B		
Interference immunity		EN 61000–4–2/3/4/5/6		
Accessories				
Module board, overall width of 12.5mm, 4 connections per side				
Screw terminal			80.060.0020.1	1
Spring clamp terminal			80.060.0021.1	1
Coding branch			Z5.563.0453.0	25
Plug-in jumper			Z8.000.0229.5	50
Large marker tag, white, blank			04.249.4053.0	500
Small marker tag			04.249.1053.0	500
red, blank			04.249.1553.0	500
blue, blank			04.249.2053.0	500
white, blank			04.249.2053.0	500

Subject to change without further notice

dipos

Dimensions (mm) W x H x D
16.5 x 60.5 x 91

Constant voltage source 10 V

Approvals: UL, ⊡, CSA

Description	Type	Part no.	Std. pack	
	KSQ – 10 V	57.803.8053.0	1	
Wiring diagram, dimensions	**See page 513**			
Technical data				
Power supply				
Supply voltage	15...30 V DC, polarised			
Power consumption	approx. 10 mA + output current			
Constant voltage output				
Output voltage	10 V DC			**Note for application:**
Setting range of output voltage	±0,5 V			The module has an adjustment range of + - 0.5 V to
Maximum output current	30 mA			compensate for any inaccuracies within the
				potentiometer.
Influence of load variation output voltage	≤ 1 %			
Error on modification of load	≤ 1 % (at 0 ...500 Ω)			
influence of ambient temperature	30 ppm/K			
Ambient operating temperature	See derating curve			
Isolation to mounting rail	2 $kV_{eff.}$			
Mounting rail	TS 35			

electronics

cores, AKT+AKB

cores dimensions

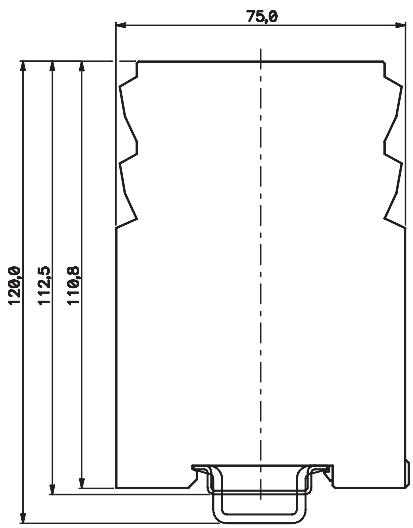

AKB
Analog interface module

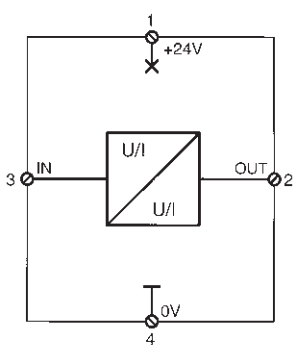

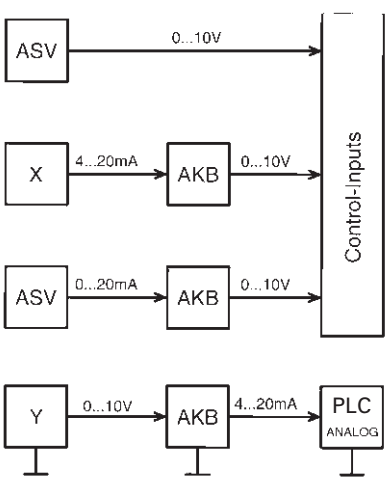

AKT
Analog isolating module

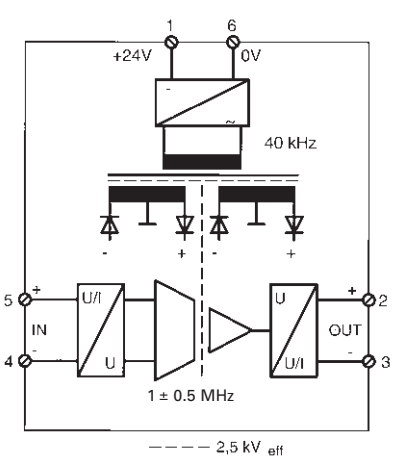

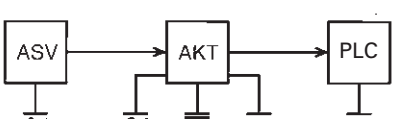

Subject to change without further notice

UET, UET-P, dipos KSQ, KSQ

UET/UET-P
Isolating set point amplifiers

UET

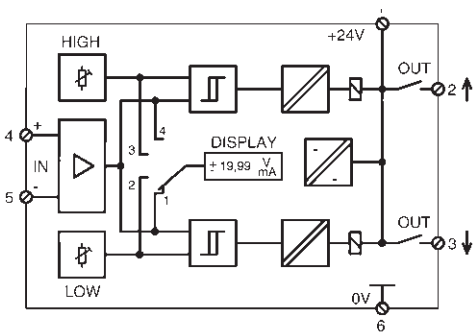

UET-P

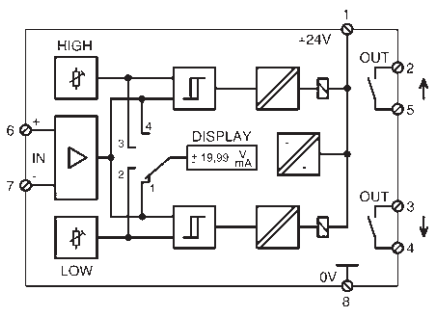

KSQ
Constant voltage source

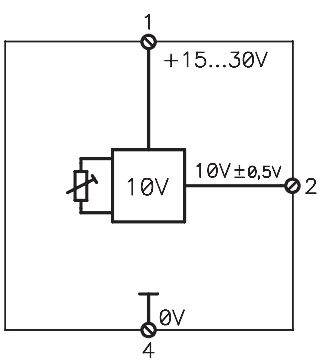

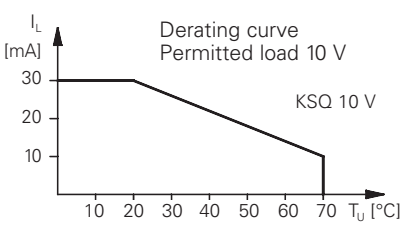

dipos
Constant voltage source

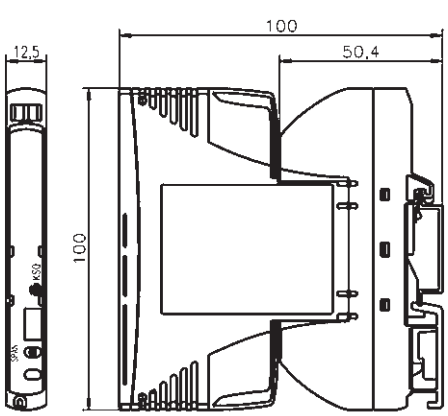

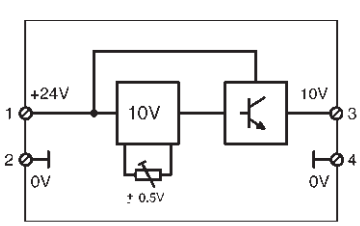

electronics

Power-Supply

power

Single phase/three phase switched mode power supply units
Power supply units 24 V/0.3 – 40 A
Universal power transformer
Rectifier module
Fixed voltage regulator

power offers

- Temperature controlled power limit
- Efficiency < 90 %
- Modules with current limiter
- Overload indication
- Compact designs
- Short circuit protection
- Broad band output

All Wieland Components which require CE general certification are CE certified, and identified with the CE logo.

electronics

Electronic Components

Power-Supply

Explanation of important technical terms

wipos

Output characteristic

Response characteristic of the power supply when exceeding the specified output values.

The output characteristics are:

- ❒ **Constant current mode**
  When exceeding the nominal current, the device supplies a constant current independent of the voltage.
- ❒ **Fold-back mode**
  When exceeding the nominal current, the output voltage decreases to zero while the current subsides.
- ❒ **Hiccup mode**
  The device switches off when the nominal current is exceeded, but switches on again periodically and checks whether the overload is still applied. When the overload has diminished, the device switches on automatically.
- ❒ **Over-current switch-off mode**
  When exceeding the nominal current, the device switches off and must be manually switched on again after the overload is removed.

Response time

The period of time required after a defined load change until the output voltage is again within the tolerance range.

Operating temperature

The temperature range that an operating device must not exceed.

Drift

Output voltage changing over time or the temperature.

DC/DC transducer

Device that converts a given direct voltage into a different direct voltage by means of a switching regulator.

Inrush current

The peak current caused during switch-on of a power supply by the charging current of the filter capacitors. It is limited by the input impedance but can also be limited further by special components.

Radio interference, electromagnetic interference

Unwanted high-frequency disturbance variables caused by switching processes within the power supply. We distinguish between conducted and radiated radio interference. Conducted interferences are reduced to permitted values by means of filters, while radiated interferences can be kept within the permitted limits by means of optimized PCB creation and screening.

Insulation voltage

Insulation voltage is the maximum voltage that can be applied between two isolated circuits.

Cooling

Heat transfer from components that are producing power loss. We distinguish between thermal radiation, convection (natural and forced convection with fan), and thermal conduction to an external heat exchanger.

Short-circuit protected

Protection of the power supply against overload and short circuit.

See the output characteristic for various options.

Storage temperature

The temperature range at which a device can be stored (not operated) without being damaged.

Load regulation

Change of output voltage at a defined load change.

Power reduction, derating

Reduction of output power required under certain circumstances such as when exceeding a defined temperature.

Power factor

Ratio between real power and apparent power. In a switch-mode power supply, the power factor normally becomes smaller than 1 due to a non-sinusoidal current input.

Hold-up time

The period of time in which the output voltage is still controlled after the mains voltage has dropped completely.

Line regulation

Change of output voltage at a defined mains voltage change while all the other parameters (load) are kept constant.

Nominal output voltage

Output voltage specified for the device. The voltage can be increased or decreased within specified limits below and above the nominal value.

Temperature coefficient

Output voltage change depending on the temperature.

Ambient temperature

Temperature of the steady air around the device. It is normally measured within a radius of approx. 10 mm around the operating device.

Overshoot

Increase of the output voltage exceeding the specific value due to a rapid load change.

Overcurrent limitation

Protective mechanism against overload of the power supply due to excessive output current. Also see short-circuit current.

Efficiency

Relation between output power and input power, normally indicated at full load and nominal input voltage. Efficiency is one of the most important features when evaluating a power supply.

The difference between input power and output power is converted into heat. Any increase in efficiency therefore results in the heat load on the components being reduced and the service life of the device being increased. Even small improvements in efficiency will result in drastic changes in the service life.

wipos

wipos switch-mode power supplies – Power competence for any control cabinet

Power supplies are the heart of any control cabinet. They safeguard the life of any connected electrical and electronic component. In addition to providing a reliable supply to units under different load cases, the devices themselves must also be safe for the user.

Narrow, but powerful

Knowing that rail space is a key concern for our customers, we designed our new ***wipos*** power supplies with a very narrow footprint, enabling optimal space utilization in the control cabinet. Our single-phase, rail-mountable devices range from 50 to 480 W and require only 45 mm to 86 mm of rail space.

Your life is important to us

The vertical ***wipos*** device series, provides a hinged cover for the primary-side connection points. It safely covers all connection points with hazardous contact voltage. Wire entries are clearly marked for safe and easy installation.

Overload problems – non-existent for *wipos*

wipos incorporates a temperature-controlled power limitation function as protection against overload caused by excessive ambient temperatures or unfavorable installation conditions. The output voltage is reduced causing the output power to decrease before the semi-conductors can reach an impermissibly high temperature.

Parallel operation – whatever you want

For special balancing of the output current during parallel operation of several ***wipos*** devices, the output can be changed. It is set by default in a way that the output voltage is as constant as possible, independent of the load.

The control precision is ± 1% of the nominal current. For parallel operation, the output is changed in a way that an approximately uniform load distribution is achieved even when considering manufacturing tolerances and slightly different output voltages. The overall residual ripple is very low at < 50 mV.

Further features of the ***wipos*** switch mode power supply series:

- ❒ Power factor correction (PFC, vertical versions) according to EN 61000-3-2
- ❒ Temperature-prompted power limitation
- ❒ Efficiency up to 90%
- ❒ Extended output voltage range of 23 V – 30 V
- ❒ Output characteristic selectable for output current balancing during parallel operation
- ❒ Change of current limitation via internal potentiometer
- ❒ Reduced ripple on the output (< 50 m V)
- ❒ Reduced ramp-up time < 1 s
- ❒ Protection against battery discharge in OFF state during parallel loading operation
- ❒ Red LED to signal overloads
- ❒ Convenient DIN rail mounting, even for 40 A, 3-phase devices
- ❒ Hiccup Mode
- ❒ Optional features; remote ON/OFF, overload signal, power failure signal, and output characteristic switchover
- ❒ UL-pending, CSA approvals
- ❒ Standards VDE 0805, EN 60950, IEC 950, UL 1950, safety extra-low voltage (SELV) EN 60950, EN 55011, EN 61000-6-1/-2, EN 55022 class B

Custom devices and solutions also available.

Single-phase switch-mode power supplies vertical design

wipos

Dimensions (mm): W x H x D

	24 V / 2 A **Primary switch-mode regulator** CE; Approvals: UL, CSA and pending 45 x 72 x 105		**24 V / 5 A** **Primary switch-mode regulator** CE; Approvals: cULus, and CSA pending 70 x 138 x 139	
Description	Type	Part no.	Type	Part no.
48 W	power supply, 24 V / 2 A	81.000.6010.0		
120 W			power supply, 24 V / 5 A	81.000.6030.0
240 W				
480 W				
Output power, current limitation characteristic	**see graphs on page 530**		**see graphs on page 530**	
Input				
Nominal input voltage	110–230 V_{AC}, 47–63 Hz (universal input)		115/230 V_{AC}, 47–63 Hz (selectable input)	
Input voltage range	94–265 V_{AC}		93–132 V_{AC}, 187–265 V_{AC}	
Nominal input current	0.6 A at 230 V_{AC}/1.1 A at 115 V_{AC}		0.9 A at 230 V_{AC}/2.2 A at 115 V_{AC}	
Input current peak	I/t < 1.5 A/s		< 30 A	
Power factor cos φ	0.45 capacitive at 230 V_{AC}/0.5 capacitive at 115 V_{AC}		0.5 capacitive at 230 V_{AC}/0.58 capacitive at 115 V_{AC}	
PFC standard (harmonics)	–		EN 61000-3-2	
Output				
Output voltage	24 V ±3%		24 V ±1%	
Typical output setting range	–		22–30 V DC	
Output direct current	0–2 A		0–5 A	
Max. power output	–		120 W (when set to 30 V max. 4 A)	
Ripple	< 50 mV		< 50 mV	
Typical current limitation	2.5 A		6 A	
Parallel operation	yes		yes	
Efficiency, typical	89%		89%	
Hold-up time	> 70 ms / 230 V_{AC}; > 10 ms / 115 V_{AC}		> 20 ms / 230 V_{AC}; > 15 ms / 115 V_{AC}	
Line regulation	< 0.2% at UON ±15%		< 0.2% at UON ±15%	
Load regulation	< 1% at 0 A -> >$I_{nominal}$		< 1% at 0 A -> >$I_{nominal}$	
Dynamics	< 2 ms at 10 <—> 90% $I_{nominal}$		< 2 ms at 10 <—> 90% $I_{nominal}$	
Current limitation	permanently short-circuit proof (see graphs on page 530)		permanently short-circuit proof (see graphs on page 530)	
Overrun-proof/open-circuit proof	yes		yes	
Output overcurrent switch-off	yes		yes	
Output security	VDE 0805/EN 60950/IEC 950/UL 1959		VDE 0805/EN 60950/IEC 950/UL 1959	
Class of Protection	safety extra-low voltage (SELV) EN 60950		safety extra-low voltage (SELV) EN 60950	
Degree of protection	class I at 149002-31001/149002-21001		class I at 149002-31001/149002-21001	
Additional data, standards	IP 20		IP 20	
Leakage current	< 0.25 mA (47—63 Hz mains frequency)		< 0.75 mA (47—63 Hz mains frequency)	
Ambient temperature	–10 °C...+70 °C at free convection		–10 °C...+70 °C at free convection	
Power derating	2.5%/K from +60 °C (see graphs on page 530)		2.5%/K from +60 °C (see graphs on page 530)	
Storage temperature	–25 °C...+85 °C		–25 °C...+85 °C	
EMC CE-certified	EN 55011, EN 61000-6-1/-2		EN 55011, EN 61000-6-1/-2	
	EN 55011/EN 55022 class B		EN 55011/EN 55022 class B	
	8 KV contact discharge, 15 KV air discharge		8 KV contact discharge, 15 KV air discharge	
	10 V/m		10 V/m	
	4 kV input, 2 kV output / capacitive coupling		4 kV input, 2 kV output / capacitive coupling	
	4 KV unbalanced, 4 KV balanced		4 kV unbalanced, 4 kV balanced	
	10 V, 150 kHz...80 MHz		10 V, 150 kHz...80 MHz	
Weight	approx. 0.2 kg		approx. 0.9 kg	
Installation	slide for mounting to DIN rail DIN EN 60715		slide for mounting to DIN rail DIN EN 60715	
Installation position	panel-mounted; input connectors on top, output conn. at the bottom		panel-mounted; input connectors on top, output conn. at the bottom	

Subject to change without further notice

wipos

Dimensions (mm): W x H x D

24 V / 10 A
Primary switch-mode regulator
CE; Approvals: UL, CSA and GL pending
70 x 153.5 x 164

24 V / 20 A
Primary switch-mode regulator
CE; Approvals: UL, CSA and GL pending
86 x 233 x 173

Description	Type	Part no.	Std. pack	Type	Part no.	Std. pack
48 W						
120 W						
240 W	mains power supply 24 V / 10A	81.000.6040.0	1			
480 W				power supply 24 V / 20 A	81.000.6050.0	1
Output power, current limitation characteristic	**see page 10**			**see page 10**		
Input						
Nominal input voltage	115/230 V_{AC}, 47–63 Hz (selectable input)			230 V_{AC}, 47–63 Hz		
Input voltage range	93–132 V_{AC}, 187–265 V_{AC}			190–265 V_{AC}		
Nominal input current	1.8 A at 230 V_{AC}/4.2 A at 115 V_{AC}			3.0 A at 230 V_{AC}		
Input current peak	< 30 A			< 30 A		
Power factor cos φ	0.5 capacitive at 230 V_{AC}/0.58 capacitive at 115 V_{AC}			0.82 capacitive at 230 V_{AC}		
PFC standard (harmonics)	EN 61000-3-2			EN 61000-3-2		
Output						
Output voltage	24 V ±1%			24 V ±1%		
Typical setting range	22–30 V DC			23-29 V DC		
Output direct current	0-10 A			0-20 A		
Max. power output	240 W (when set to 30 V max. 8 A)			480 W (when set to 29 V max. 16 A)		
Ripple	< 50 mV			< 50 mV		
Typical current limitation	12 A			22 A		
Parallel operation	yes			yes		
Efficiency, typical	90%			89%		
Hold-up time	> 35 ms / 230 V_{AC}; > 30 ms / 115 V AC			> 20 ms / 230 V_{AC}		
Line regulation	< 0.2% at U_{ON} ±15%			< 0.2% at U_{ON} ±15%		
Load regulation	< 1% at 0 A -> >$I_{nominal}$			< 1% at 0 A -> >$I_{nominal}$		
Dynamics	< 2 ms at 10 <—> 90% $I_{nominal}$			< 2 ms at 10 <—> 90% $I_{nominal}$		
Current limitation	permanently short-circuit proof (see graph on page 10)			permanently short-circuit proof (see graph on page 10)		
Overrun-proof/open-circuit proof	yes			yes		
Output overcurrent switch-off	yes			yes		
Output security	VDE 0805/EN 60950/IEC 950/UL 1959			VDE 0805/EN 60950/IEC 950/UL 1959		
	safety extra-low voltage (SELV) EN 60950			safety extra-low voltage (SELV) EN 60950		
Class of protection	class I at 149002-31001/149002-21001			class I at 149002-31001/149002-21001		
Degree of protection	IP 20			IP 20		
Leakage current	< 0.75 mA (47—63 Hz mains frequency)			< 3.50 mA (47—63 Hz mains frequency)		
Ambient temperature	–10 °C...+70 °C at free convection			–10 °C...+70 °C at free convection		
Power derating	2.5%/K from +60 °C (see graph on page 10)			2.5%/K from +60 °C (see graph on page 10)		
Storage temperature	–25 °C...+85 °C			–25 °C...+85 °C		
EMC CE-certified	EN 55011, EN 61000-6-1/-2			EN 55011, EN 61000-6-1/-2		
Radio interference suppression	EN 55011/EN 55022 class B			EN 55011/EN 55022 class B		
Static discharge ESD (IEC 1000-4-2)	8 KV contact discharge, 15 KV air discharge			8 KV contact discharge, 15 KV air discharge		
Electromagnetic fields (IEC 1000-4-3)	10 V/m			10 V/m		
Burst (IEC 1000-4-4)	4 kV input, 2 kV output / capacitive coupling			4 kV input, 2 kV output / capacitive coupling		
Surge (IEC 1000-4-5)	4 KV unbalanced, 4 KV balanced			4 kV unbalanced, 4 kV balanced		
Conducted interference type (ENV 50141, IEC 1000-4-6)	10 V, 150 kHz...80 MHz			10 V, 150 kHz...80 MHz		
Weight	approx. 1.1 kg			approx. 2.0 kg		
Installation	slide for DIN rail mounting DIN EN 60715			slide for DIN rail mounting DIN EN 60715		
Mounting position	panel-mounted; input connectors on top, output conn. at the bottom			panel-mounted; input connectors on top, output conn. at the bottom		

Single-phase switch-mode power supplies horizontal design

wipos

Dimensions (mm): W x H x D	**24 V / 5 A** **Single-phase primary switch-mode regulator** CE; Approvals: cULus, and CSA pending 147 x 105 x 86			**24 V / 10 A** **Single-phase primary switch-mode regulator** CE; Approvals: cULus, and CSA pending 205 x 105 x 86		
Description	Type	Part no.	Std. pack	Type	Part no.	Std. pack
120 W	mains power supply 24 V / 5 A	81.000.6031.0	1			
240 W				mains power supply 24 V / 10 A	81.000.6041.0	1
480 W						
Output power, current limitation characteristic	**see graphs on page 530**			**see graphs on page 530**		
Input						
Nominal input voltage	105-250 V_{AC}, 47–63 Hz (universal input)			105-125 V_{AC} / 210–250 V_{AC}, 47–63 Hz		
Input voltage range	97-265 V_{AC}, 47–63 Hz			97-132 V_{AC} / 195-265 V_{AC}, 47–63 Hz, can switched over to solder bridge		
Nominal input current	1.23 A at 230 V_{AC}			4.0 A at 115230 V_{AC} / 2.2 A at 230 V_{AC}		
Input current peak	< 30 A			< 30 A		
Power factor cos φ	0.52 capacitive at 230 V_{AC}			0.52 capacitive at 230 V_{AC}		
Fuse	5 x 20 mm, T 3,15 A / 250 V internal			5 x 20mm, T 6.3 A / 250 V internal		
Output						
Output voltage	24 V DC ±1%			24 V DC ±1%		
Typical setting range	22.5-27.5 V DC			22.5-27.5 V DC		
Output direct current	0-5 A			0-10 A		
Ripple	< 100 mV			< 100 mV		
Typical current limitation	6 A			12.5 A		
Parallel operation	yes			yes		
Efficiency, typical	86%			89%		
Hold-up time	> 80 ms / 230 V_{AC}; > 15 ms / 115 V_{AC}			> 15 ms / 230 V_{AC}		
Line regulation	< 0.2% at U_{ON} ±15%			< 0.2% at U_{ON} ±15%		
Regulation	< 1% at 0 A -> >$I_{nominal}$			< 1% at 0 A -> >$I_{nominal}$		
Dynamics	< 2 ms at 10 <—> 90% $I_{nominal}$, overshoot < 2%			< 2 ms at 10 <—> 90% $I_{nominal}$, overshoot < 2%		
Current limitation	permanently short-circuit proof (see graphs on page 530)			permanently short-circuit proof (see graphs on page 530)		
Overrun-proof/open-circuit proof	yes			yes		
Output overcurrent switch-off	yes			yes		
Output security	VDE 0805/EN 60950/IEC 950/UL 1959			VDE 0805/EN 60950/IEC 950/UL 1959		
	safety extra-low voltage (SELV) EN 60950			safety extra-low voltage (SELV) EN 60950		
Class of protection	class I			class I		
Degree of protection	IP 20			IP 20		
Leakage current	< 0.75 mA (47—63 Hz mains frequency)			< 0.75 mA (47—63 Hz mains frequency)		
Ambient temperature	0 °C...+70 °C at free convection			0 °C...+70 °C at free convection		
Power derating	2.5%/K from +60 °C (see graph on page 10)			2.5%/K from +60 °C (see graph on page 10)		
Storage temperature	–25 °C...+85 °C			–25 °C...+85 °C		
EMC CE-certified	EN 61000-6-3/-4, EN 61000-6-1/-2			EN 61000-6-3/-4, EN 61000-6-1/-2		
Radio interference suppression	EN 55011/EN 55022 class B			EN 55011/EN 55022 class B		
Static discharge ESD (IEC 1000-4-2)	8 KV contact discharge, 15 KV air discharge			8 KV contact discharge, 15 KV air discharge		
Electromagnetic fields (IEC 1000-4-3)	10 V/m			10 V/m		
Burst (IEC 1000-4-4)	4 kV input, 2 kV output / capacitive coupling			4 kV input, 2 kV output / capacitive coupling		
Surge (IEC 1000-4-5)	4 KV unbalanced, 4 KV balanced			4 kV unbalanced, 4 kV balanced		
Conducted interference type (ENV 50141, IEC 1000-4-6)	10 V, 150 kHz...80 MHz			10 V, 150 kHz...80 MHz		
Weight	approx. 0.8 kg			approx. 1.2 kg		
Installation	snap-on DIN rail fixation DIN EN 60715			snap-on DIN rail fixation DIN EN 60715		
Installation position	panel-mounted; input connectors on top, output conn. at the bottom			panell-mounted; input connectors on top, output conn. at the bottom		

Subject to change without further notice

wipos

24 V / 20 A
Single-phase primary switch-mode regulator

Dimensions (mm): W x H x D
240 x 130 x 86

CE; Approvals: cULus, CSA and CSA pending

Description	Type	Part no.	Std. pack
120 W			
240 W			
480 W	mains power supply 24 V / 20 A	81.000.6051.0	1
output power, current limitation characteristic	**see graphs on page 530**		
Input			
Nominal input voltage	210–250 V_{AC}, 47–63 Hz (universal input)		
Input voltage range	195–265 V_{AC}, 47–63 Hz		
Nominal input current	4.2 A at 230 V_{AC}		
Input current peak	< 30 A		
Power factor cos φ	0.53 capacitive at 230 V_{AC}		
Fuse	5 x 20mm, T 10 A / 250 V internal		
Output			
Output voltage	24 V DC ±1%		
Typical setting range	22.5-27.5 V DC		
Output direct current	0-20 A		
Ripple	< 100 mV		
Typical current limitation	25 A		
Parallel operation	yes		
Efficiency, typical	88%		
Hold-up time	> 15 ms / 115 V_{AC}		
Line regulation	< 0.2% at U_{ON} ±15%		
Load regulation	< 1% at 0 A -> >$I_{nominal}$		
Dynamics	< 2 ms at 10 <—> 90% $I_{nominal}$, overshoot < 2%		
Current limitation	permanently short-circuit proof (see graphs on page 530)		
Overrun-proof/open-circuit proof	yes		
Output overvoltage switch-off	yes		
Output security	VDE 0805/EN 60950/IEC 950/UL 1959		
	safety extra-low voltage (SELV) EN 60950		
Class of protection	class I		
Degree of protection	IP 20		
Leakage current	< 3.50 mA (47—63 Hz mains frequency)		
Ambient temperature	0 °C...+70 °C at free convection		
Power derating	2.5%/K from +60 °C (see graphs on page 530)		
Storage temperature	–25 °C...+85 °C		
EMC CE-certified	EN 61000-6-3/-4, EN 61000-6-1/-2		
Radio interference suppression	EN 55011/EN 55022 class B		
Static discharge ESD (IEC 1000-4-2)	8 KV contact discharge, 15 KV air discharge		
Electromagnetic fields (IEC 1000-4-3)	10 V/m burst (IEC 1000-4-4) 4 kV input, 2 kV output / capacitive coupling		
Surge (IEC 1000-4-5)	4 kV unbalanced, 4 kV balanced		
Conducted interference type (ENV 50141, IEC 1000-4-6)	10 V, 150 kHz...80 MHz		
Weight	approx. 1.9 kg		
Installation	snap-on DIN rail fixation DIN EN 60715		
Mounting position	panel-mounted; input connectors on top, output conn. at the bottom		

Three-phase switch-mode power supplies – horizontal design

wipos

24 V / 20 A
Three-phase primary switch-mode regulator
CE; Approvals: cULus, and CSA pending
240 x 130 x 86

24 V / 40 A
Three-phase primary switch-mode regulator
CE; Approvals: cULus, and CSA pending
296 x 176 x 86

Dimensions (mm): W x H x D

Description	Type	Part no.	Std. pack	Type	Part no.	Std. pack
480 W	mains power supply 24 V / 20A	81.000.6053.0	1			
960 W				mains power supply 24 V / 40 A	81.000.6063.0	1
Output power, current limitation characteristic	**see graphs on page 530**			**see graphs on page 530**		
Input						
Nominal input voltage	3 x 360–500 V_{AC}, 47–63 Hz			3 x 360–500 V_{AC}, 47–63 Hz		
Input voltage range	3 x 340-550 V_{AC}, 47–63 Hz			3 x 340-550 V_{AC}, 47–63 Hz		
Nominal input current	3 x 1.5 A at 3 x 400 V_{AC}			3 x 3 A at 3 x 400 V_{AC}		
Input current peak	< 50 A			< 50 A		
Power factor cos w	0.53 capacitive at 400 V_{AC}			0.53 capacitive at 400 V_{AC}		
Output						
Output voltage	24 V DC ±1%			24 V DC ±1%		
Typical setting range	22.5-27.5 V DC			22.5-27.5 V DC		
Output direct current	0-20 A			0-40 A		
Ripple	< 100 mV			< 100 mV		
Typical current limitation	25 A			45 A		
Parallel operation	yes			yes		
Efficiency, typical	90%			90%		
Hold-up time	> 5 ms / 400 V_{AC}			> 5 ms / 400 V_{AC}		
Line regulation	< 0.2% at U_{ON} ±15%			< 0.2% at U_{ON} ±15%		
Load regulation	< 1% at 0 A -> >$I_{nominal}$			< 1% at 0 A -> >$I_{nominal}$		
Dynamics	< 2 ms at 10 <—> 90% $I_{nominal}$, overshoot < 2%			< 2 ms at 10 <—> 90% $I_{nominal}$, overshoot < 2%		
Current limitation	permanently short-circuit proof (see graphs on page 530)			permanently short-circuit proof (see graphs on page 530)		
Overrun-proof/open-circuit proof	yes			yes		
Output overvoltage switch-off	yes			yes		
Output security	VDE 0805/EN 60950/IEC 950/UL 1959			VDE 0805/EN 60950/IEC 950/UL 1959		
	safety extra-low voltage (SELV) EN 60950			safety extra-low voltage (SELV) EN 60950		
Class of protection	class I			class I		
Degree of protection	IP 20			IP 20		
Leakage current	< 3.50 mA (47—63 Hz mains frequency)			< 3.50 mA (47—63 Hz mains frequency)		
Ambient temperature	0 °C...+70 °C at free convection			0 °C...+70 °C at free convection		
Power derating	2.5%/K from +60 °C (see graphs on page 530)			2.5%/K from +60 °C (see graphs on page 530)		
Storage temperature	–25 °C...+85 °C			–25 °C...+85 °C		
EMC CE-certified	EN 61000-6-3/-4, EN 61000-6-1/-2			EN 61000-6-3/-4, EN 61000-6-1/-2		
Radio interference suppression	EN 55011/EN 55022 class B			EN 55011/EN 55022 class B		
Static discharge ESD (IEC 1000-4-2)	8 KV contact discharge, 15 KV air discharge			8 KV contact discharge, 15 KV air discharge		
Electromagnetic fields (IEC 1000-4-3)	10 V/m			10 V/m		
Burst (IEC 1000-4-4)	4 kV input, 2 kV output / capacitive coupling			4 kV input, 2 kV output / capacitive coupling		
Surge (IEC 1000-4-5)	4 KV unbalanced, 4 KV balanced			4 kV unbalanced, 4 kV balanced		
Conducted interference type (ENV 50141, IEC 1000-4-6)	10 V, 150 kHz...80 MHz			10 V, 150 kHz...80 MHz		
Weight	approx. 1.9 kg			approx. 3.6 kg		
Installation	snap-on DIN rail fixation DIN EN 60715			snap-on DIN rail fixation DIN EN 60715		
Installation position	panel-mounted; input connectors on top, output conn. at the bottom			panel-mounted; input connectors on top, output conn. at the bottom		

Subject to change without further notice

Power Supply
with overload protection and short circuit protection

power supply

	Power supply unit 24 V / 0,3 A unregulated Approvals: CSA			**Power supply unit 24 V / 1 A regulated**		
Dimensions (mm): W x H x D	70.5 x 80 x 66			138 x 80 x 95		
Description	Type	Part No.	Box Qty	Type	Part No.	Box Qty
	WRS-T115/230-399M	81.000.3000.0	1	WPS-115/230-24 V1A	81.000.3010.0	1
Note for user:						
Before commissioning the power supply units,						
an external wire jumper (1 mm²) must be inserted						
by the user to select to the input voltage!						
Wiring diagram, dimensions, diagram	**See page 531**			**See page 531**		
Input data						
Input voltage (U_E)	115/230 V AC +6%/–10%, 50–60 Hz			115/230 V AC +6%/–10%, 50–60 Hz		
115 V AC**	Insert external jumper between 1–3, 2–4			Insert external jumper between 1–3, 2–4		
230 V AC**	Insert external jumper between 2–3			Insert external jumper between 2–3		
Input current						
at U_E = 115 V AC	ca. 100 mA			ca. 450 mA		
at U_E = 230 V AC	ca. 50 mA			ca. 225 mA		
Power consumption	ca. 8 VA			ca. 52 VA		
Input fuse						
F1 (5 x 20 mm at U_E = 115 V AC)**	160 mA T			500 mA T		
F1 (5 x 20 mm at U_E = 230 V AC)	80 mA T			250 mA T		
** carried out by the user						
Output data						
Nominal voltage (U_A)	24 V DC (note voltage/current diagram page 531)			24 V DC ±5%		
Nominal current	300 mA (note voltage/current diagram page 531)			1 A		
Ripple voltage (load dependent)	< 2 V_{SS}			type 20 mV		
(at full load operation and min. input voltage)	–			maximum 1,5 V		
Output fuse F2 (5 x 20 mm)	315 mA T			short circuit proof		
Bridging facility using jumper	Negative pole			Negative pole		
(Jumper not included with supply)						
Maximum jumper current	0.5 A			1 A		
Status display	LED			LED		
General data						
Isolation voltage between input/output	4 kV, 50 Hz, 1min			4 kV		
Nominal operating mode	100% ED			100% ED		
Ambient temperature	–25 °C...+50 °C			0 °C...+40 °C		
Storage temperature	–40 °C...+85 °C			–40 °C...+85 °C		
Type of connection	Screw terminal			Screw terminal		
Wire range	22 – 12 AWG			22 – 12 AWG		
Finely stranded	0.5 – 2.5 mm²			0.5 – 2.5 mm²		
Single core	0.5 – 4 mm²			0.5 – 4 mm²		
Safety transformer according to	VDE 0551 (EN 60742)			VDE 0551 (EN 60742)		
Installation on DIN rail	TS 35			TS 35		
Mounting position	horizontal			horizontal		
Accessories						
Jumper (for bridging facility)		Z8.000.0103.4	10		Z8.000.0103.4	10

Subject to change without further notice

Power transformer for 10 V, 18 V, 21 V and 24 V AC

Dimensions (mm): W x H x D
83 x 96 x 90

NTU
Universal power transformer

Description	Type	Part No.	Box Qty
	WPS-115/230-60 VA	87.230.1553.0	1
Note for user:			
Before commissioning the power supply units,			
an external wire jumper (1 mm²) must be inserted			
by the user to select to the input voltage!			
Wiring diagram, dimensions diagram	**See page 531**		
Input data			
Input voltage (U_E)	115/230 V AC +6%/–10%, 50–60 Hz		
115 V AC**	Insert external jumper between 1–3, 2–4		
230 V AC**	Insert external jumper between 2–3		
Input fuse			
F1 (5 x 20 mm at U_E = 115 V AC)**	0.8 mA T		
F1 (5 x 20 mm at U_E = 230 V AC)	0.4 mA T		
Suppression circuit	Varistor		
** carried out by the user			
Output data			
Output voltage (U_A)	10 V, 18 V, 21 V, 24 V AC		
Maximum output current	2.5 A AC		
Maximum output power	60 VA		
General data			
Isolation voltage between input/output	4 kV		
Nominal operating mode	100% ED		
Ambient temperature	0 °C...+40 °C		
Transport temperature	–25 °C...+70 °C		
Storage temperature	–25 °C...+55 °C		
Type of connection	Screw terminal		
Wire range	22 – 12 AWG		
Finely stranded	0.14 – 2.5 mm²		
Single core	0.14 – 4 mm²		
Safety transformer according to	VDE 0551 (EN 60742)		
Protection against accidental contact	DIN 40050 (IP 20)		
Installation on DIN rail	TS 35		
Mounting position	horizontal		

Suggested circuits for a complete power unit, consisting of the universal transformer 87.230.1553.0 and the respective rectifier module and/or fixed voltage regulator.

Output voltage V ⎓	Load current A	Type of switching	Rectifier/fixed voltage regulator	Secondary voltage V ~
5	1	regulated	87.230.0453.0	10
12	1	regulated	87.230.0553.0	18
15	1	regulated	87.230.0653.0	21
24	1	regulated	87.230.0753.0	24
24	2.0	unregulated	87.230.2053.0	18
24	2.5	unregulated	81.000.1000.0	18

Power Supply
Rectifier modules

BGL

for generating filtered DC voltage

	Rectifier module BGL 2,5 A			**Rectifier module BGL 3A**		
Dimensions (mm): W x H x D	38.5 x 80 x 75,7			61 x 96 x 62.7		
Description	Type	Part No.	Box Qty	Type	Part No.	Box Qty
	BGL-25VAC-2,5ADC	81.000.1000.0	1	BGL-40VAC-3ADC	87.230.2053.0	1
Wiring diagram, dimensions	**See page 532**			**See page 532**		
Input data						
Maximum input voltage	25 V AC			40 V AC		
Frequency	50–60 Hz			50–60 Hz		
On-state voltage	1.8 V			≤ 2 V		
Output data						
Output voltage maximal	40 V DC			63 V DC		
Maximum nominal current T_U = 45 °C	2.5 A			3 A		
General data						
Ambient temperature	–25 °C...+45 °C			–25 °C...+45 °C		
Storage temperature	–25 °C...+85 °C			–25 °C...+85 °C		
Wire range	22 – 12 AWG			22 – 12 AWG		
Finely stranded	0.5 – 2.5 mm^2			0.5 – 2.5 mm^2		
Single core	0.5 – 4 mm^2			0.5 – 4 mm^2		
Installation on DIN rail	TS 35 or TS 32			TS 35 or TS 32		
Mounting position	–			horizontal (Kühlkörper nach oben)		

Subject to change without further notice

Power Supply

FSR

Fixed voltage regulator with thermal overload protection

Dimensions (mm): W x H x D
61 x 96 x 65.5

Fixed voltage regulator FSR 1 A

Description	Type	Part No.	Box Qty	
	FSR-25 VAC-5 V1A	87.230.0453.0	1	
	FSR-25 VAC-12 V1A	87.230.0553.0	1	
	FSR-25 VAC-15 V1A	87.230.0653.0	1	
	FSR-25 VAC-24 V1A	87.230.0753.0	1	
Wiring diagram, dimensions, derating	**See page 533**			
Input data				
Maximum input voltage	25 V AC	25 V AC	25 V AC	28 V AC
Minimum input voltage at I_L max.	11 V AC	17 V AC	19 V AC	25 V AC
Open circuit power consumption	60 mA	60 mA	60 mA	60 mA
Input fuse (5 x 20 mm)	1.6 mA T	1.6 mA T	1.6 mA T	1.6 mA T
Output data				
Output voltage	5 V DC ± 5%	12 V DC ± 5%	15 V DC ± 5%	24 V DC ± 5%
Nominal current	1 A	1 A	1 A	1 A
Ripple voltage	30 mV	30 mV	30 mV	30 mV
Status display	LED	LED	LED	LED
General data				
Ambient temperature	0 °C...+45 °C	0 °C...+45 °C	0 °C...+45 °C	0 °C...+45 °C
Storage temperature	–25 °C...+85 °C	–25 °C...+85 °C	–25 °C...+85 °C	–25 °C...+85 °C
Wire range	22 – 12 AWG	22 – 12 AWG	22 – 12 AWG	22 – 12 AWG
Finely stranded	0.5 – 2.5 mm^2	0.5 – 2.5 mm^2	0.5 – 2.5 mm^2	0.5 – 2.5 mm^2
Single core	0.5 – 4 mm^2	0.5 – 4 mm^2	0.5 – 4 mm^2	0.5 – 4 mm^2
Installation on DIN rail	TS 35 or TS 32	TS 35 or TS 32	TS 35 or TS 32	TS 35 or TS 32
Mounting position	horizontal	horizontal	horizontal	horizontal

Subject to change without further notice

FSR

With overload protection and short circuit protection

Fixed voltage regulator FSR 3 A

Dimensions (mm): W x H x D
115 x 96 x 81

Approvals:

Description	Type	Part No.	Box Qty
	FSR-38 VDC-24 V3A	87.230.1953.0	1
Wiring diagram, dimensions	**See page 533**		
Input data			
Maximum input voltage	38 V DC		
Minimum input voltage	28 V DC		
Open circuit power consumption	60 mA		
Output data			
Output voltage (with linear control)	24 V DC ± 4%, short circuit proof		
Nominal current	3 A DC		
Typical ripple voltage (load dependent)	50 mV_{SS}		
Fuse (5 x 20 mm)	MT 3,15 A		
Suppression circuit	Diode		
Status display	LED green		
General data			
Ambient temperature	–25 °C...+45 °C		
Storage temperature	–25 °C...+85 °C		
Nominal operating mode	100% ED		
Wire range	22 – 12 AWG		
Finely stranded	0.14 – 2.5 mm^2		
Single core	0.14 – 4 mm^2		
Installation on DIN rail	TS 35 or TS 32		
Mounting position	horizontal (heat sink at the top)		
Weight	approx. 400 g		

electronics

wipos

Derating: output power

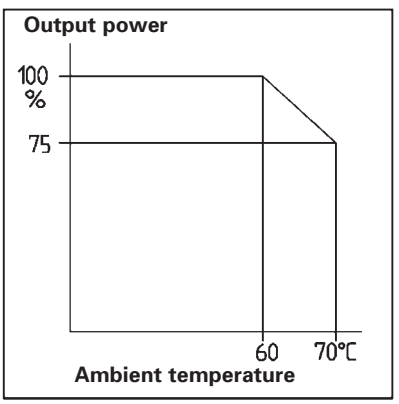

Current limitation characteristic:
Single-phase power supply,
vertical design:
2 A

Single-phase power supply,
horizontal design:
5 A

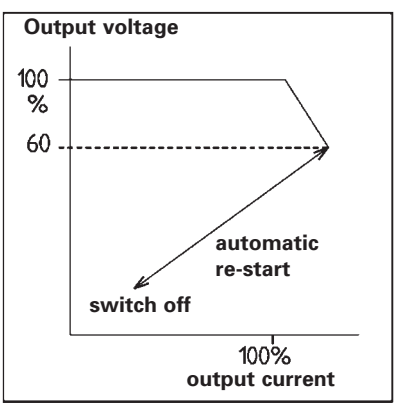

Current limitation characteristic:

Single-phase power supply,
vertical design:
5 A / 10 A / 20 A

Single-phase/three-phase power supply,
horizontal design: 10 A / 20 A / 40 A

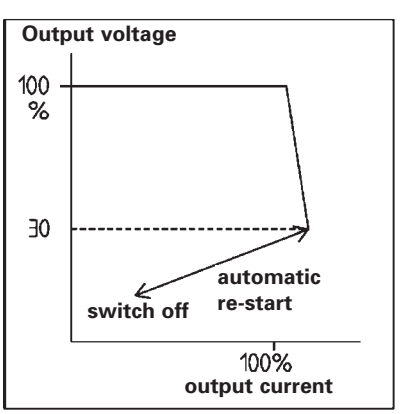

Subject to change without further notice

power supply

Power supply unit 24 V/0,3 A

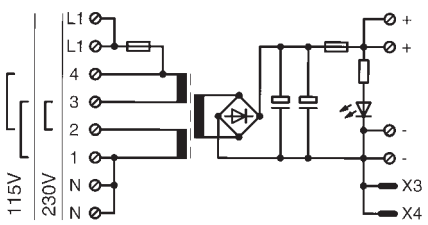

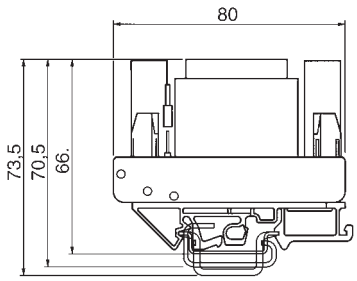

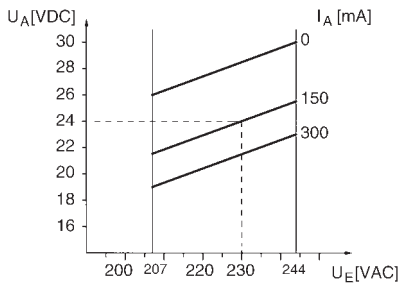

Power supply unit 24 V/1 A

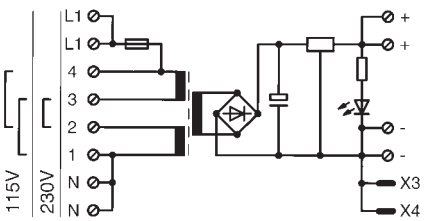

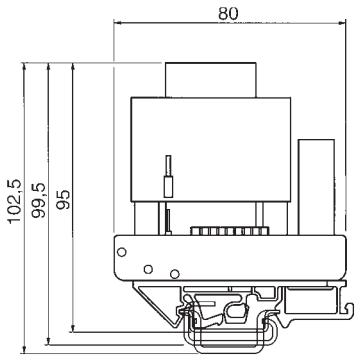

NTU
Universal power transformer

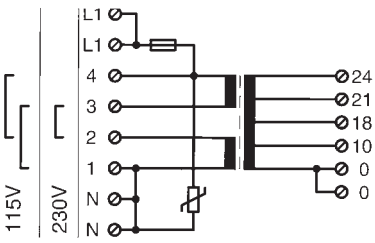

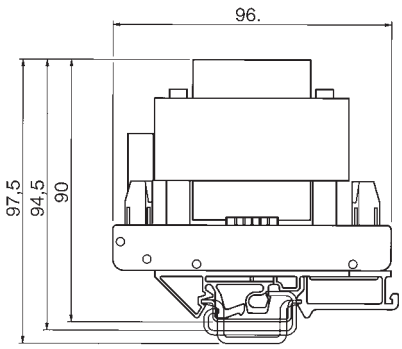

electronics

Power Supply

BGL

Rectifier modules

BGL 2,5 A

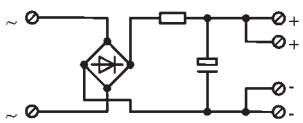

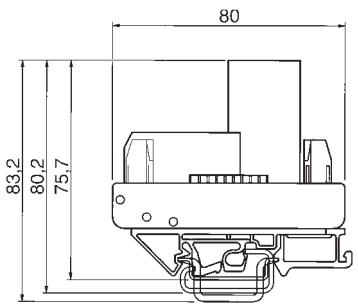

BGL 3 A

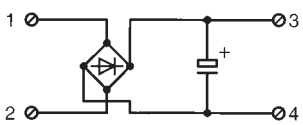

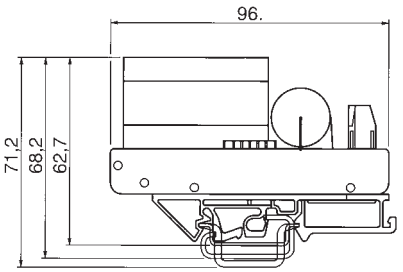

Subject to change without further notice

FSR

Fixed voltage

FSR 1 A

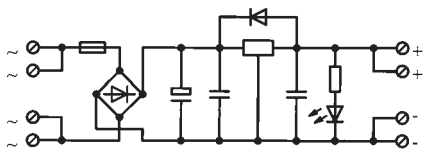

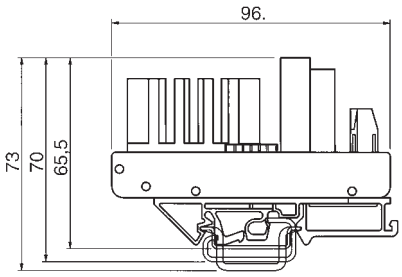

Derating curves

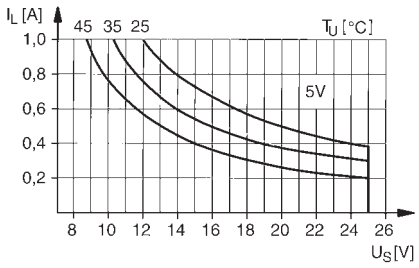

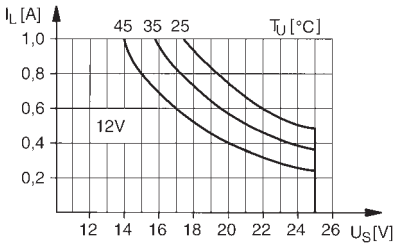

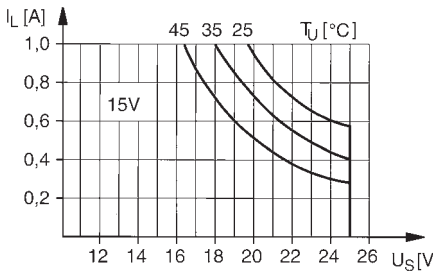

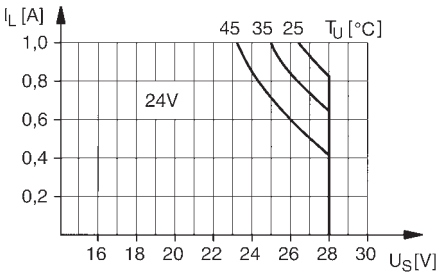

FSR 3 A

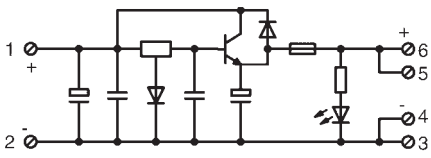

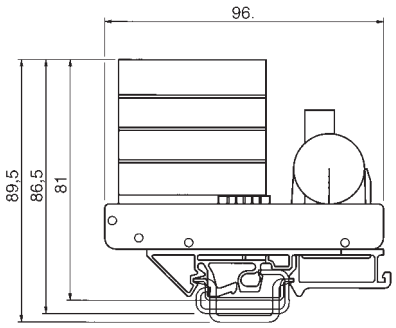

electronics

Wieland Function Modules

function

Electronic contactors
Thermistor overload relay
Lamp test module/fuse module
Centralised fault indication
Three phase system monitoring/fuse monitoring
Rotation indicator
Introduction to SSW RS 232 interface convertor
Interface converter

function offers

- Electronic load relay
- Machine protection via temperature monitoring
- Detection of wire breakage
- Phase failure
- Various test and monitoring modules
- Compact SSW RS 232 (for V.11 and V.24)

All Wieland Components which require CE general certification are CE certified, and identified with the CE logo.

electronics

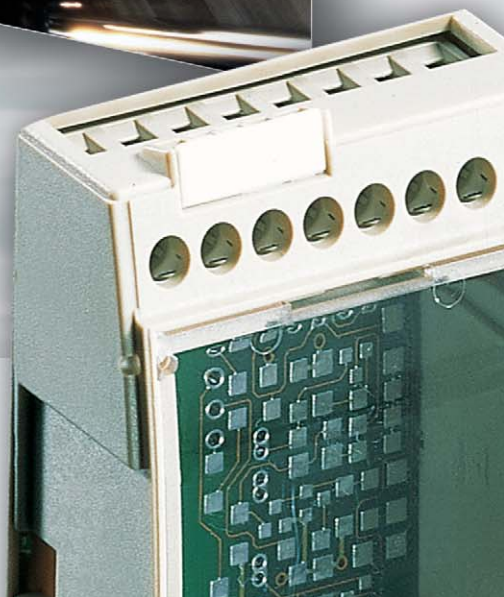

Electronic components

Wieland Function Modules

cemos

General information

cemos

- ❒ **Electronic three phase contactor**
- ❒ **Electronic reversing contactor**
- ❒ **DC motor-driven relay**

General

As opposed to mechanical contactors, electronic load relays offer the benefit of a practically unlimited service life and a high operating speed for functions.
Optocoupler technology enables a non-contacting, bounce-free and wear-resistant switching of phase loads With a switching frequency up to 10 Hz, a considerable increase in economic efficiency can already be seen compared to conventional, electromechanical components. Electronic relays are primarily used as output elements by programmable controllers.
An additional RCV protective circuit of the outputs enables a continuously reliable operation.

Electronic three-phase contactor

The solid-state relays can switch inductive loads such as motors on and off during zero voltage operation.

Electronic reversing contactor and DC motor driven relay

Apart from switching on and off, the reversing contactor allows a change in the direction of travel for three-phase inductive motors. The DC motor-driven relay performs the same function for DC motors.

Further characteristics include a reciprocal closing lockout as well as a fixed minimum changeover time between anti-clockwise and clockwise rotation.

Thermistor overload relay TMS 101

General

The electronic thermistor overload relay monitors the windings of electrical machines in connection with PTC thermistor detectors. During usage, reliable protection against thermal overload is guaranteed. A bimetal overload trip unit is not required.

The areas of application are:

- ❒ Monitoring of motor temperature using short circuit current methodology
- ❒ Overload start-up (overload)
- ❒ Impeded cooling
- ❒ Excessive duty rating
- ❒ High ambient temperature
- ❒ Locked rotors
- ❒ Detection of wire breakage
- ❒ Phase failure

Function and structure

The thermistor overload relay TMS 101 evaluates up to six series-connected PTC resistors.
Three-phase inductive motors are usually fitted with three sensors. Pole-changing three-phase inductive motors with separate winding require six sensors. The relay is energised in normal operation i.e. the permitted temperature level has not been exceeded. If the temperature rises above the defined value, which occurs in conjunction with an increase in resistance, the relay drops out. The motor is simultaneously disconnected and the fault indicator lights up.
Due to an internal memory circuit, the motor remains switched off until the reset resistance is reached and the 'reset' button (internal or external) is pressed. Only then is it possible to start up the motor again. To detect a wire breakage, the sensor cables operate using a closed circuit current methodology.

Monitoring modules

General

The increasing automation and centralisation of electrical installations requires more feedback information from the process to guarantee an error-free functional sequence.

Three-phase system monitoring

The most simple and effective way to monitor a three-phase network is to measure the under-voltage. The process involves recording each phase so that a voltage drop is immediately detected.
A signal is generated if the voltage falls below 85% of the mains voltage (according to VDE 0108).

Three-phase fuse monitoring

Three-phase induction motors are particularly at risk when a phase fails. The three-phase fuse monitoring is specially designed for monitoring supply leads of three-phase induction motors for which system monitoring is not suitable.

Rotation indicator

The rotation indicator monitors the phase sequence L1-L2-L3 which determines the direction of rotation for three-phase induction motors. If the phase sequence of the monitored three-phase network is incorrect, the relay of the rotation indicator remains open.

Lamp test module

The test module is designed for 14 indicator lights.
It is used for:

- ❒ Checking LED + lamp displays
- ❒ Avoiding undetected faults
- ❒ Preventing incorrect diagnosis

Fuse module

The module has been designed for 4 miniature fuses for control circuits.
The fuse module can be used for 12 to 24 V (with LED failure indicator) or 110 to 220 V (with neon lamps failure indicator).

Subject to change without further notice

cemos

Electronic contactors

On/off/reverse switching functions for loads and motors

Zero-sequence voltage switch
Short closing/opening times
High switching frequency

Dimensions (mm): W x H x D

400 V AC / 2A
Electronic three phase contactor
Approvals:

400 V AC / 2,5A
Electronic reversing contactor
Approvals:

Description	Type	Part no.	Std. pack	Type	Part no.	Std. pack
Electronic three phase contactor		80.020.6000.0	1			
Electronic reversing contactor					80.020.6003.0	1
DC motor contactor						
Wiring diagrams, derating curve, limit curve	**See pages 544-545**			**See pages 544-545**		
Input						
Operating voltage	24 V AC/DC +10%/-15%			24 V DC +10%/-15%		
Nominal input current AC/DC	ca. 44/21 mA			ca. 23 mA		
Nominal input power	ca. 1 VA/0,5 W			ca. 0.6 W		
Voltage range for "OFF"	0...10 V AC/DC			0...10 V DC		
Interlocking of control inputs				yes		
Reversing time (delay) left/right				ca. 100 ms		
Protection circuit of input	Overvoltage protection			Overvoltage protection, polarity reverse protection		
Status display	Green LED			Green LED		
Output						
Nominal switching voltage	400 V AC			400 V AC		
Maximum switching voltage	500 V AC			500 V AC		
Minimum switching voltage	100 V AC			100 V AC		
Peak reverse voltage	1200 Vs			1200 Vs		
Critical rate of rise voltage	500 V/µs			500 V/µs		
Critical on-state voltage	1.1 V			1.1 V		
Maximum current	2 A			2.5 A		
Minimum current	150 mA			150 mA		
Maximum peak current (10 ms)	230 A			230 A		
Typical residual current	6 mA			6 mA		
Power factor cos φ	≥ 0.5			≥ 0.5		
Zero-sequence voltage switch	yes			yes		
I^2t value	265 A^2s			265 A^2s		
Semiconductor fuse	FF			FF		
Maximum motor power	0.75 W			1.1 kW		
Protection circuit of output	RCV-circuit			RCV-circuit		
Maximum pickup delay	10 ms			10 ms		
Maximum dropout delay	10 ms			10 ms		
Maximum switching frequency, resistive	10 Hz			10 Hz		
Maximum switching frequency, inductive	5 Hz			2 kHz		
Isolation voltage between input/output	4 kV_{eff}			4 kV_{eff}		
Ambient temperature	0 °C...+50 °C			0 °C...+50 °C		
Storage temperature	–25 °C...+55 °C			–25 °C...+55 °C		
Type of protection/mounting rail	IP 20 / TS 35			IP 20 / TS 35		
Wire range	20 – 12 AWG			22 – 12 AWG		
finely stranded	0.5 mm^2 – 2.5 mm^2			0.5 mm^2 – 2.5 mm^2		
single core	0.5 mm^2 – 4 mm^2			0.5 mm^2 – 4 mm^2		
Location of mounting rail	horizontal			horizontal		
Norms/specifications	VDE 0160			VDE 0160		
Emitted interference	EN 61000			EN 61000		
Interference immunity	EN 61000			EN 61000		

Function module
DC motor contactor

cemos

Short closing/opening times
Wear resistant equipment
Electrical isolation

Dimensions (mm): W x H x D
60.8 x 80 x 63

24V DC / 3A
DC motor reversing contactor

Approvals:

Description	Type	Part no.	Std. pack	
Electronic three phase contactor				
Electronic reversing contactor				
DC motor contactor		99.801.3900.9		1
Wiring diagrams, derating curve, limit curve	**See pages 544-545**			
Input				
Operating voltage	24 V DC			
Voltage range for "ON"	15...28 V DC			
Voltage range for "OFF"	0...5 V DC			
Nominal current for "ON"	ca. 10 mA			
Closed circuit current consumption	ca. 25 mA			
Pick up delay	ca. 1 ms			
Protection circuit of input	Polarised diode			
Status display: Start/Stop –H1 and direction –H3	Green LED			
Output				
Nominal switching voltage	24 V DC			
Maximum switching voltage	28 V DC			**Important note:**
Minimum switching voltage	20 V DC			In the case of motors that are controlled by solid-state
Maximum switching current	3A DC (Derating)			relays, an additional mechanical contact must be
Minimum switching current	10 mA			connected in series for safety separation.
Motor voltage UA1	Terminal 6			This mechanical contact can influence several motors.
Motor voltage UA2	Terminal 5			The protection of the solid state component must be
Motor peak current	6 A (200 ms)			guaranteed by a rapid reacting fuse.
Typical R_{DS} ON	0,6 Ω			
Fault indicator: excess temperature and overcurrent –H2	Red LED			
Maximum pickup delay	5 ms			
Maximum dropout delay	5 ms			
Isolation voltage between input/output	4 kV_{eff}			
Ambient temperature	–25 °C...+50 °C			
Storage temperature	–25 °C...+55 °C			
Mounting rail	TS 35 and TS 32			
Wire range, finely stranded/single core	0.5 mm^2 – 2.5 mm^2 / 0.5 mm^2 – 4 mm^2 / 22 – 12 AWG			
Wire range (load), finely stranded/single core	0.5 mm^2 – 4 mm^2 / 0.5 mm^2 – 6 mm^2 / 22 – 10 AWG			
Location of mounting rail	horizontal			
Norms/specifications	VDE 0160			
Emitted interference	EN 61000-6-3			
Interference immunity	EN 61000-2			

Subject to change without further notice

Thermistor overload relay

TMS

- **with detection of wire breakage**
- **for onerous start up**
- **for high duty rating**
- **for high ambient temperature**
- **for locked rotors**
- **for phase failure**

Thermistor overload relay with reset

Dimensions (mm): w x H x D
48 x 96 x 60

Description	Type	Part no.	Std. pack
	TMS-101-250V5A	87.110.6253.0	1
Wiring diagram, dimensions	**See pages 546**		
Input data			
Nominal voltage	230 V AC +6% / –10%, 50–60 Hz		
Power consumption	ca. 2 VA		
Disconnection resistance RA	3 kΩ ≤ R_A ≤ 4 kΩ		
Reset resistance RE	1.75 kΩ ±10%		
Maximum number of detectors	6 pieces		
External reset button	1 make contact		
Status display	Red LED		
Output data			
Maximum switching voltage	250 V AC/DC		
Maximum switching current	5 A AC/DC		
Maximum total current (2 simultaneous contacts)	7.5 A AC/DC		
Switching capacity (resistive load)			
at 24 V DC, maximum	120 W		
at 250 V AC, maximum	1250 VA		
Contact arrangements	2 Changeover contacts (SPDT)		
General data			
Ambient temperature	0 °C...+40 °C		
Storage temperature	–25 °C...+55 °C		
Transport temperature	–25 °C...+70 °C		
Wire range	22 – 12 AWG		
finely stranded	0.14 – 2.5 mm^2		
single core	0.14 – 4 mm^2		
Installation on mounting rail	TS 35 or TS 32		

Connection example + function of TMS 101

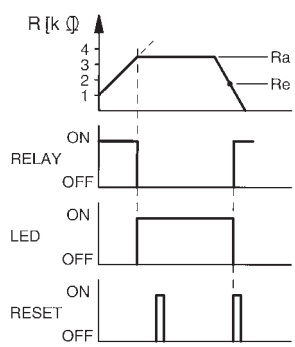

Important note for user:
The relay outputs must be supplied by the same phase (e.g. L1)

electronics

Function modules
Lamp test module/fuse module

LPB/SBS

Lamp test module
Checking LED displays
Avoiding undetected faults
Preventing incorrect diagnosis

Fuse module
4 miniature fuses for control circuits
with operation indicator
For restricted spaces

	Lamp test module			**Fuse module**		
	Approvals:			Approvals:		
Dimensions (mm): W x H x D	48 x 96 x 92			48 x 96 x 92		
Description	Type	Part no.	Std. pack	Type	Part no.	Std. pack
	LPB-14L-250V1A	87.040.3053.0	1	SBS-4SI-24V6,3A	87.010.7653.0	2
				SBS-4SI-230V6,3A	87.010.7453.0	2
Wiring diagram, dimensions	**See pages 547**			**See pages 547**		
Technical data						
Maximum nominal voltage	250 V			250 V		
Diode type	1N4007					
Maximum diode current	1 A					
Diode reverse voltage	1000 V					
Typical voltage in forward direction per diode	0.7 V					
Lamp test at terminal	P					
Lamp connection at terminal	L					
Switching operation at terminal	B					
Number of test lamps (can be bridge via P-P)	2 x 7					
				87.010.7653.0	**87.010.7453.0**	
Nominal voltage				12–24 V AC/DC	115–230 V AC/DC +6%/-10%	
Maximum nominal current per fuse				6.3 A	6.3 A	
Maximum total current over 4 fuses				18 A	18 A	
Maximum fuse capacity				1.6 W*	1.6 W*	
Maximum fuse capacity over 4 fuses				4.8 W	4.8 W	
Maximum current for disrupted fuse				15 mA	0.5 A	
Number of fuse holders				4	4	
Dimensions of fuse holders				5 x 20 mm	5 x 20 mm	
Touching voltage of fuse holders				IEC 257, DIN 0820	IEC 257, DIN 0820	
Status display				LED 24V (red)	Neon lamp 110 V	
				*Note derating!		
				Fuses not included		
General data						
Ambient temperature	–25 °C...+50 °C			–25 °C...+50 °C		
Storage temperature	–40 °C...+55 °C			–40 °C...+55 °C		
Wire range	22 – 12 AWG			22 – 12 AWG		
finely stranded	0.14 – 2.5 mm^2			0.14 – 2.5 mm^2		
single core	0.14 – 4 mm^2			0.14 – 4 mm^2		
Installation on mounting rail	TS 35 or TS 32			TS 35 or TS 32		

Subject to change without further notice

Centralised fault indication

SSM

For monitoring control systems
Possible to locate and eliminate faults rapidly

Dimensions (mm): W x H x D

Description	Type	Part no.	Std. pack	Type	Part no.	Std. pack
	Centralised fault indication relay Approvals: 48 x 96 x 60			**Expansion module for centralised fault indication relay** Approvals: 27 x 96 x 60		
	SSM-7E230V-250V5A	87.030.1053.0	1	SSM-7E230V	87.010.2053.0	1
Wiring diagrams, dimensions	**See pages 548**			**See pages 548**		
Input data						
Nominal voltage	230 V AC +6%/-10%, 50–60 Hz					
Input current	approx. 1 mA			approx. 1 mA		
Power consumption	approx. 1 VA					
Fault inputs	terminals, 230 V AC +6%/– 10%			terminals (Kl. 1...7), 230 V AC +6%/–10%		
Series-connected inputs	terminals			terminals		
Output data						
Maximum switching voltage	250 V AC/DC					
Maximum switching current	5 A AC/DC					
Switching capacity (resistive load)						
at 24V DC, maximum	120 W					
at 230V AC, maximum	1250 VA					
Contact arrangement	1 Changeover (SPDT)					
General data						
Ambient temperature	–25 °C...+50 °C			–25 °C...+50 °C		
Storage temperature	–40 °C...+85 °C			–40 °C...+85 °C		
Wire range	22 – 12 AWG			22 – 12 AWG		
finely stranded	0.14 – 2.5 mm^2			0.14 – 2.5 mm^2		
single core	0.14 – 4 mm^2			0.14 – 4 mm^2		
Installation on mounting rail	TS 35 or TS 32			TS 35 or TS 32		
Note				**Expansion module for 87.030.1053.0:**		
Terminals N and B_2 must be bridge prior to commissioning				Up to 91 further fault inputs can be connected to the basic module		
Impulses <100ms are not detected						

electronics

Function modules
Monitoring modules
DNU/DSU

Three-phase system monitoring
For voltage monitoring of three-phase systems with neutral conductors. The module will operate at 85% of the mains voltage.

Three-phase fuse monitoring
Specifically for monitoring the supply leads of three-phase inductive motors (400 V/250 V~, 50 – 60 Hz)

	Three-phase system monitoring			**Three-phase fuse monitoring**		
	Approvals:			Approvals:		
Dimensions (mm): W x H x D	48 x 96 x 60			48 x 96 x 60		
Description	Type	Part no.	Std. pack	Type	Part no.	Std. pack
with mounting foot for T S35 (for distribution board)	DNU-H-400V-250V4A	86.030.6353.0	1	DSU-400V-250V4A	87.030.6453.0	1
with mounting foot TS 35 + TS 32	DNU-U-400V-250V4A	87.030.6353.0	1			
Wiring diagram, dimensions	**See pages 549**			**See pages 550**		
Input data						
Nominal voltage	230/400 V AC +6%/–10%, 50–60 Hz			230 V AC +6%/–10%, 50–60Hz		
Power consumption	ca. 4 VA			ca. 4 VA		
System monitoring	–			3 x 400 V AC		
Operating value	0.85 x U_N			–		
Pickup delay	approx. 500 ms			ca. 6 s		
Dropout delay	ca. 500 ms			ca. 250 ms		
Switching hysteresis	ca. 5%			–		
Detection of mains failure	–			> 900 ms		
Backup fuse	ca. 0.5A			–		
Status display	LED			LED		
Output data						
Maximum switching voltage	250 V AC/DC			250 V AC		
Maximum switching current	4 A AC/DC			4 A		
Switching capacity (resistive load)						
at 24 V DC, maximum	100 W			100 W		
at 230 V AC, maximum	1100 VA			1000 VA		
Contact arrangements	2 Changeover contacts (SPDT)			1 Changeover contact (SPDT)		
General data						
Ambient temperature	–10 °C...+50 °C			–10 °C...+50 °C		
Storage temperature	–40 °C...+85 °C			–40 °C...+85 °C		
Wire range	22 – 12 AWG			22 – 12 AWG		
finely stranded	0.5 – 2.5 mm^2			0.14 – 2.5 mm^2		
single core	0.5 – 4 mm^2			0.14 – 4 mm^2		
Installation on mounting rail	0.5 A			–		
	86.030.6353.0	87.030.6353.0				
Installation on mounting rail	only on TS 35	TS 35 or TS 32		TS 35 or TS 32		

Subject to change without further notice

Rotation indicator

DRA

For monitoring the phase sequence of three-phase inductive motors

Dimensions (mm): W x H x D
48 x 96 x 63

Rotation indicator
3 x 400V / 50Hz
Approvals:

Description	Type	Part no.	Std. pack
	DRA-400V-250V3A	81.010.1000.0	1
Wiring diagram	**See pages 551**		
Input data			
Nominal voltage	approx 3 x 400 V AC +6%/–10%, 50 Hz		
Power consumption	ca. 2.5 VA		
Dropout voltage	≤ 3 x 100 V AC / 50 Hz		
Pickup delay	< 25 ms		
Dropout delay	< 30 ms		
Switching logic of the relay			
Clockwise	Relay picked up		
Anticlockwise	Relay dropped out		
Output data			
Maximum switching voltage	250 V AC		
Maximum switching current	3 A AC / DC		
Switching capacity (resistive load)			
at 24 V DC, maximum	70 W		
at 250 V AC, maximum	750 VA		
Contact arrangement	2 Changeover contacts (SPDT)		
General data			
Pickup delay	< 25 ms		
Dropout delay	< 30 ms		
Contact material	AgNi		
Endurance			
Mechanical	2 x 10^7 switching operations		
Electrical	1 x 10^5 switching operations at full load		
Test voltage of input/output	2 kV_{eff}		
Ambient temperature	0 °C...+40 °C		
Storage temperature	–40 °C...+85 °C		
Wire range	22 – 12 AWG		
finely stranded	0.5 – 2.5 mm^2		
single core	0.5 – 4 mm^2		
Installation on mounting rail	TS 35 or TS 32		

cemos

Electronic contactors

Wiring diagrams and Derating curves

Electronic three phase contactor

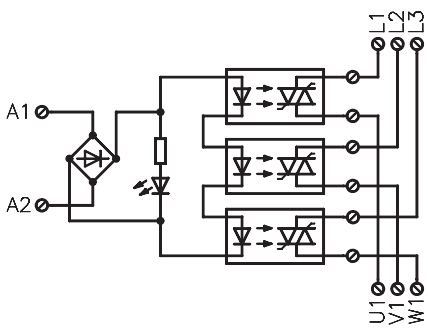

Electronic reversing contactor

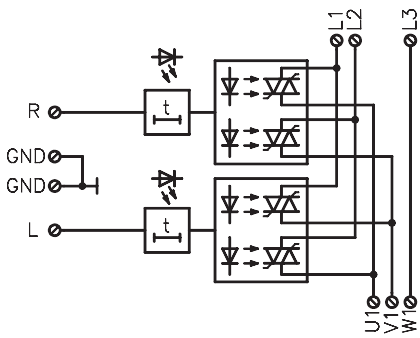

DC motor-reversing contactor

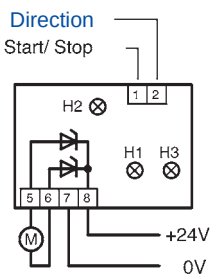

Derating of three phase contactor

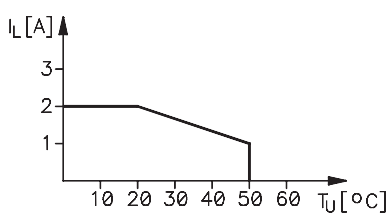

Reversing contactor in static mode

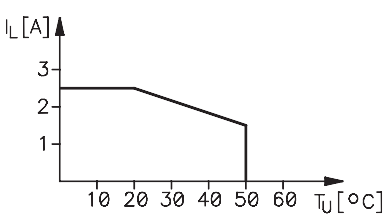

Derating curve:

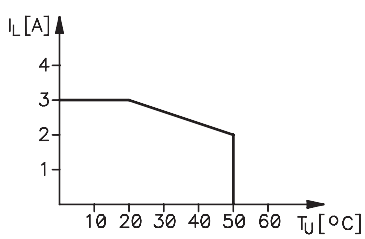

Reversing contactor in dynamic mode

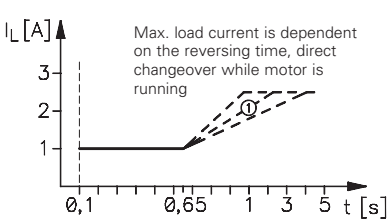

① Curve dependent on motor torque

Timing diagram for DC motor-reversing contactor

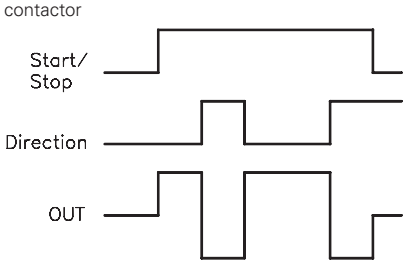

Subject to change without further notice

Dimensions

Electronic three phase contactor and Electronic reversing contactor

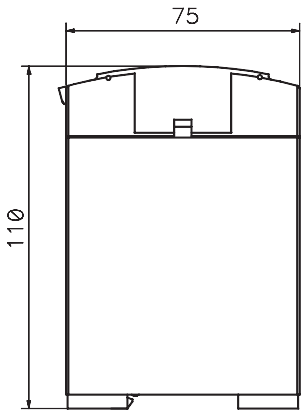

DC motor-reversing contactor

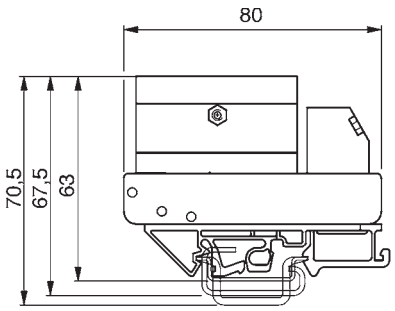

Function modules

TMS

Thermistor overload relay TMS 101

Wiring diagram

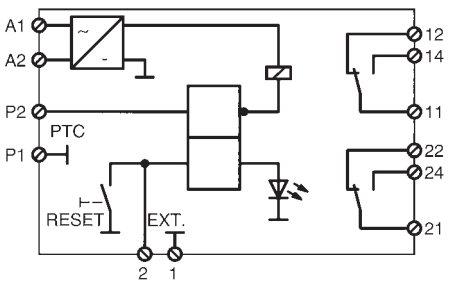

Dimensions

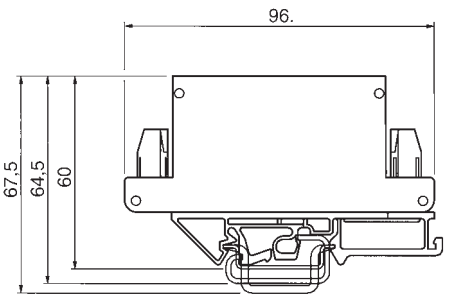

Subject to change without further notice

LPB/SBS

Lamp test module + Fuse module

Wiring diagram

Lamp test module

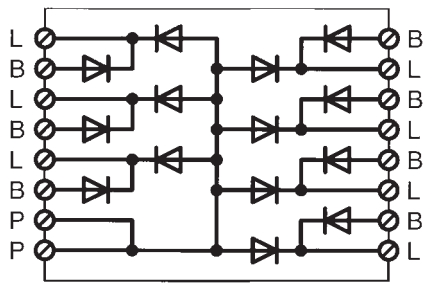

Fuse module

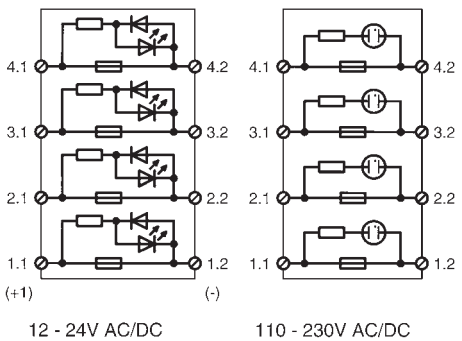

Dimensions

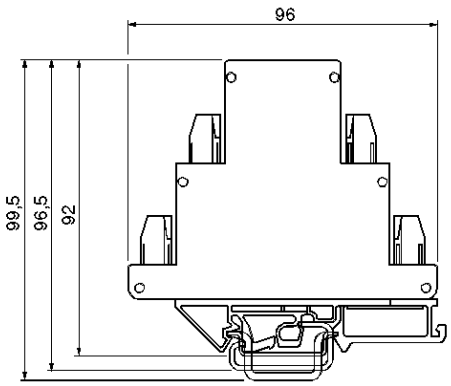

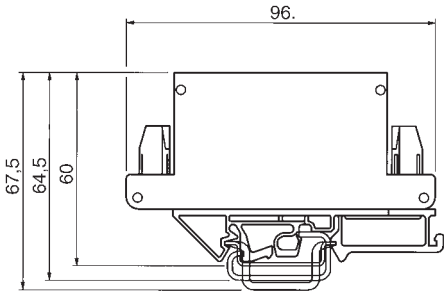

electronics

Function modules

SSM

Centralized fault indication and expansion module

Wiring diagram

Centralized fault indication

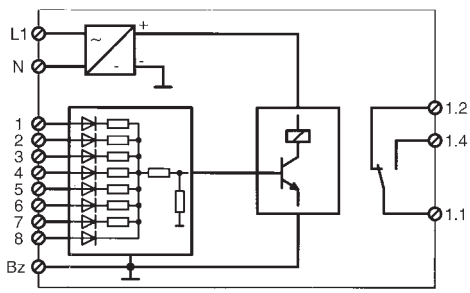

Expansion module to basic module

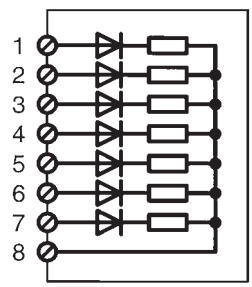

Dimensions

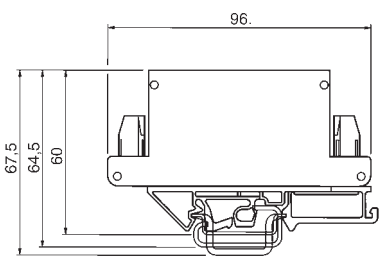

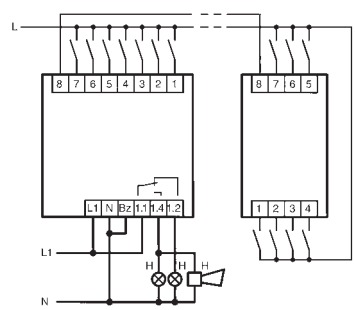

Subject to change without further notice

DNU

Three-phase system monitoring

Wiring diagram

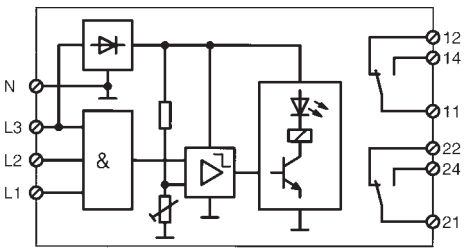

Dimensions

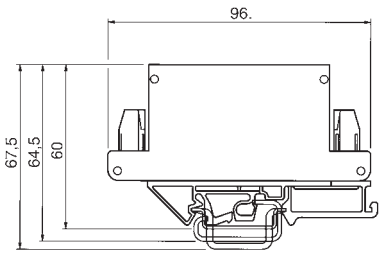

With TS35 mounting foot, the depth is 49,5 mm (including rail)

Connection example:

Centralized fault indication with expansion module

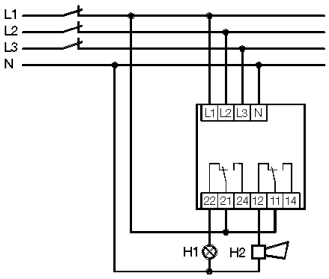

electronics

Function modules

DSU

Three-phase fuse monitoring

Wiring diagram

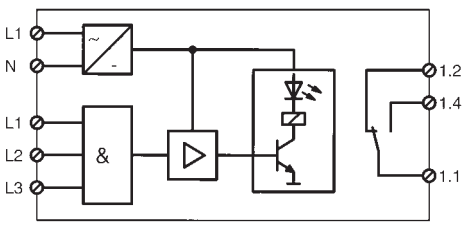

Dimensions

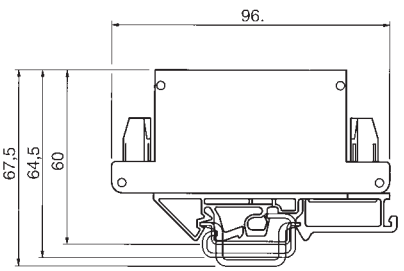

Connection example

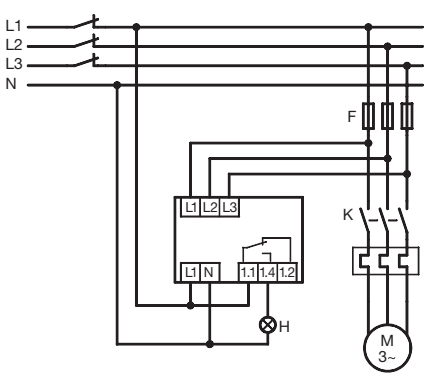

Subject to change without further notice

DRA

Rotation indicator

Wiring diagram

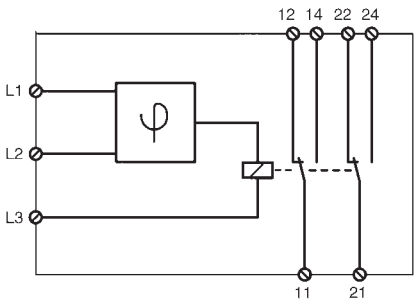

Dimensions

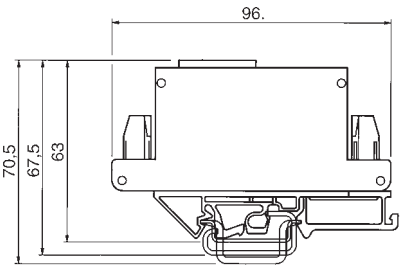

electronics

Function modules
Interface converter

SSW

Principles of serial interfaces

The increasing use of a variety of automation techniques in all areas of industry requires the processing of an increasing amount of information. The most important transmission media is serial data cables which are used to control complex processes and record process data. Further transmission media are optical fibres and infrared transmission.

A wide variety of serial interfaces are used which are not compatible with each other and frequently do not fulfil the increasing demands as regards to interference immunity, range and speed.

The Wieland SSW product range has tackled this problem and guarantees a noise-free and high-capacity data transmission in hostile industrial conditions.

RS 232 (V.24) interface

One of the most widely used serial interfaces is defined in the American norm EIA-232 and in the international standard CCITT V.24.

The data interface realises data exchange between two data processing devices (point-to-point connection) up to a maximum of 15 m in full duplex mode.

In the simplest configuration, three conductors TxD (sending data), RxD (receiving data) and GND (common signal ground) are required for this connection. The data transmission is controlled by the so-called XON/XOFF protocol (software handshake). If the transmission co-ordination should be controlled via hardware handshake, further control, signal and timing cables are available.

TTY current loop interface

The TTY current loop interface is a very well-known remote transmission interface which has its origins in telegraphy. They can be found nowadays in programmable controllers (PLC), visual display units and printers. A pair of conductors are required for both the sending and receiving of data.

The data transmission is carried out via software handshake in full duplex mode.

A loop current of 20 mA represents the state of logical "1". If the circuit is interrupted, this is evaluated as logical "0". A current-driven source is required in each loop which must either be coupled on the sending or receiving side.

RS-422(V.11) interface

Data communication with intelligent machines requires particularly rapid and high-capacity communication interfaces.

The RS 422 standard fulfils these requirements. It carries out the serial transmission of data in full duplex mode between two devices at a transmission rate up to 10 Mbit/s and a maximum distance of 1000 m.

The interface is operated at minimum with a "Sending" data channel (TxD) and a "Receiving" data channel (RXD). The sending and receiving co-ordination is implemented via software handshake.

The high rate of transmission reliability is achieved by the evaluation of the differential voltage between a twisted core pair. Interference voltages towards the zero potential are not evaluated. The electrical levels of the data cables are defined as

❒ –0,3 V to –6 V for logical "1" and

❒ +0,3 V to +6 V for logical "0".

RS-485(2 wire) interface

This serial interface type offers the possibility of multipoint connections of up to 32 devices as well as performance.

The electrical levels and their logical assignment are identical to the RS 422 standard

Limited by the 2-wire technology, the data transmission can however only take place according to half duplex mode i.e. the sending and receiving of data takes place alternately and must be controlled via an appropriate software program. In contrast to pure point-to-point communication, it must be possible to address and identify all the devices of a multipoint connection via an address using a corresponding software protocol. Only one device may send at the same time. All the other devices are meanwhile in listening mode.

The 2-wire bus cable can be up to 500 m long and must be terminated at both ends with an EOL resistor (100-200 ohm). The individual devices can be sent via spur lines up to 5 m from the bus cable.

The maximum transmission rate is 10 Mbit/s when using data cable that is twisted and shielded in pairs.

SSW-V.24 // TTY

The V.24 // interface converters are used to convert an RS 232 interface into a 20 mA current loop interface TTY or vice versa (e.g. between a PC and a PLC).

Due to the low capacity of RS 232 interfaces (15 m), the converters are installed as closely as possible to these interfaces. It is possible to bridge up to 1000 m via a cable that is twisted and shielded in pairs with the insulated and noise-free TTY signal.

SSW-V.24 // RS 422

The V.24 // RS-422-interface converters are used to convert an RS 232 interface into an RS 422 interface or vice versa. With the high-capacity and noise-free RS 422 interface, it is possible to bridge distances up to 1000 m using a cable that is twisted and shielded in pairs.

SSW-V.24 // RS 485

The RS-485-standard is used when more than two devices should communicate with each other. By converting the point-to-point RS 232 interface into the RS 485 standard with bus capability, up to 32 devices can be interconnected via a 2-wire cable.

The V.24 // RS-485-interface converters are used to convert an RS 232 interface into an RS 485 2-wire bus interface with multipoint capability or vice versa.

The interface converters operate independently of the protocol and code i.e. all the bus devices must support the same transmission protocol and the same speed.

Subject to change without further notice

SSW

Suitable for use in switchgear cabinets and directly on the PC

Interface converter
RS 232 SSW-V.24//TTY

Interface converter
RS 232 SSW-V.24//RS 422

Dimensions (mm): W x H x D
20 x 76 x 68

	Type	Part no.	Std. pack	Type	Part no.	Std. pack
	SSW-V.24//TTY	57.007.0053.0	1	SSW-V.24//RS422	57.007.0153.0	1
Wiring diagram, dimensions	**See pages 555**			**See pages 555**		
Technical data						
Supply voltage – potential assigned to the input side	5 V DC ±5% (Pin 18)			5 V DC ±5% (Pin 18)		
Maximum power consumption	130 mA			130 mA		
Input signal	V 24-level (RS 232)			V 24 level (RS 232)		
Output signal	TTY level (20-mA current loop)			RS422 level		
Maximum transmission rate	20 k Baud			20 k Baud		
Maximum transmission length	1000 m (maximum 500 Ω)			1000 m (maximum 500 Ω)		
Isolation voltage	500 V DC			500 V DC		
Ambient temperature	0 °C...50 °C			0 °C...50 °C		
Storage temperature	–25 °C...+85 °C			–25 °C...+85 °C		
Connection of input signal (plug)	25 pole D-SUB plug			25 pole D-SUB plug		
Connection of output signal (socket)	25 pole D-SUB socket			25 pole D-SUB socket		
Operating possibility				Fully active, semi active, passive		
Direction of control						
RS 232 Send V.24 → RS485						
RS 232 Receive V.24 ← RS485						
Installation on mounting rail	TS 35			TS 35		

Function modules
Interface converter

SSW

Suitable for use in switchgear cabinets and directly on the PC

Interface converter
RS 232 SSW-V.24//RS 485

Dimensions (mm): W x H x D
20 x 76 x 68

	Type	Part no.	Std. pack
	SSW-V.24//RS485	57.007.0253.0	1
Wiring diagram, dimensions	**See pages 555**		
Technical data			
Supply voltage - potential assigned to the input side	5 V DC ±5% (Pin 18)		
Maximum power consumption	130 mA		
Input signal	V 24 level (RS 232)		
Output signal	RS485 level		
Maximum transmission rate	20 k Baud		
Maximum transmission length	1000 m (maximal 500 Ω)		
Isolation voltage	500 V DC		
Ambient temperature	0 °C...50 °C		
Storage temperature	–25 °C...+85 °C		
Connection of input signal (plug)	25 pole D-SUB plug		
Connection of output signal (socket)	25 pole D-SUB socket		
Operating possibility	Fully active, semi active, passive		
Direction of control			
Send PIN 20	–3 V...–12 V		
Receive PIN 20	+3 V...+12 V		
Installation on mounting rail	TS 35		

Subject to change without further notice

SSW

SSW-V.24//TTY

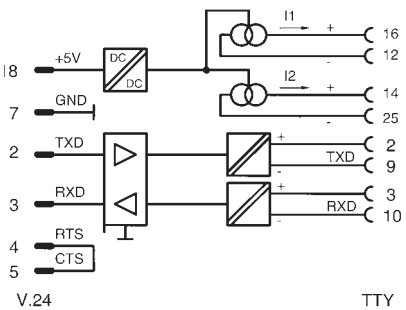

SSW-V.24//RS422

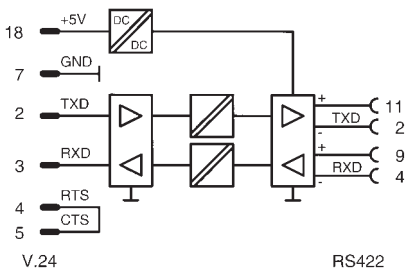

SSW-V.24//RS485

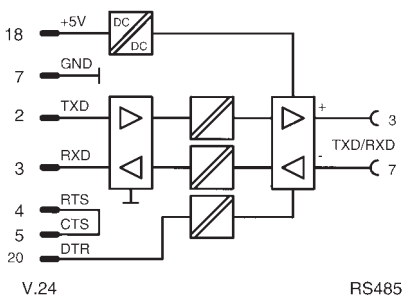

Dimensions

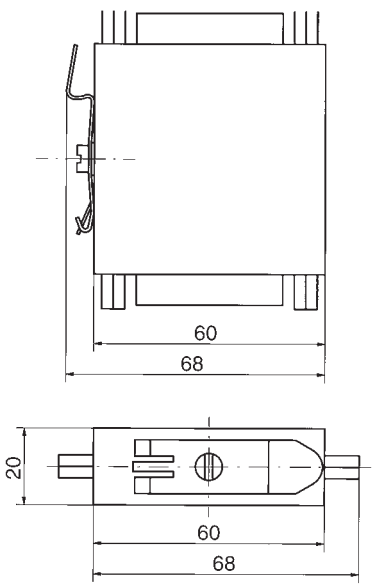

Connection examples

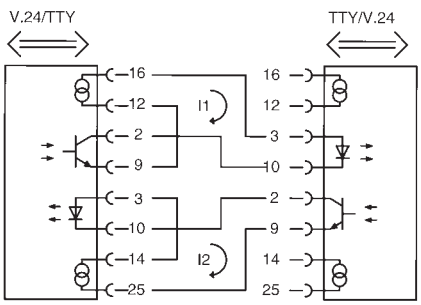

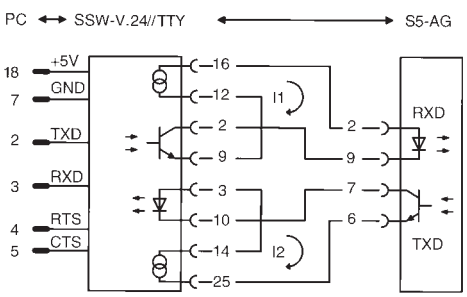

electronics

interface

D-Sub to screw terminal
IDC header to screw terminal
Interface modules and I/O plug systems for Siemens S5

interface offers

- Rapid wiring
- Rapid commissioning
- Clear cabling
- Reduction of wiring errors
- High packing density
- Time and cost savings

CE In general all Wieland components which are obliged to have the CE identification are provided with the CE mark

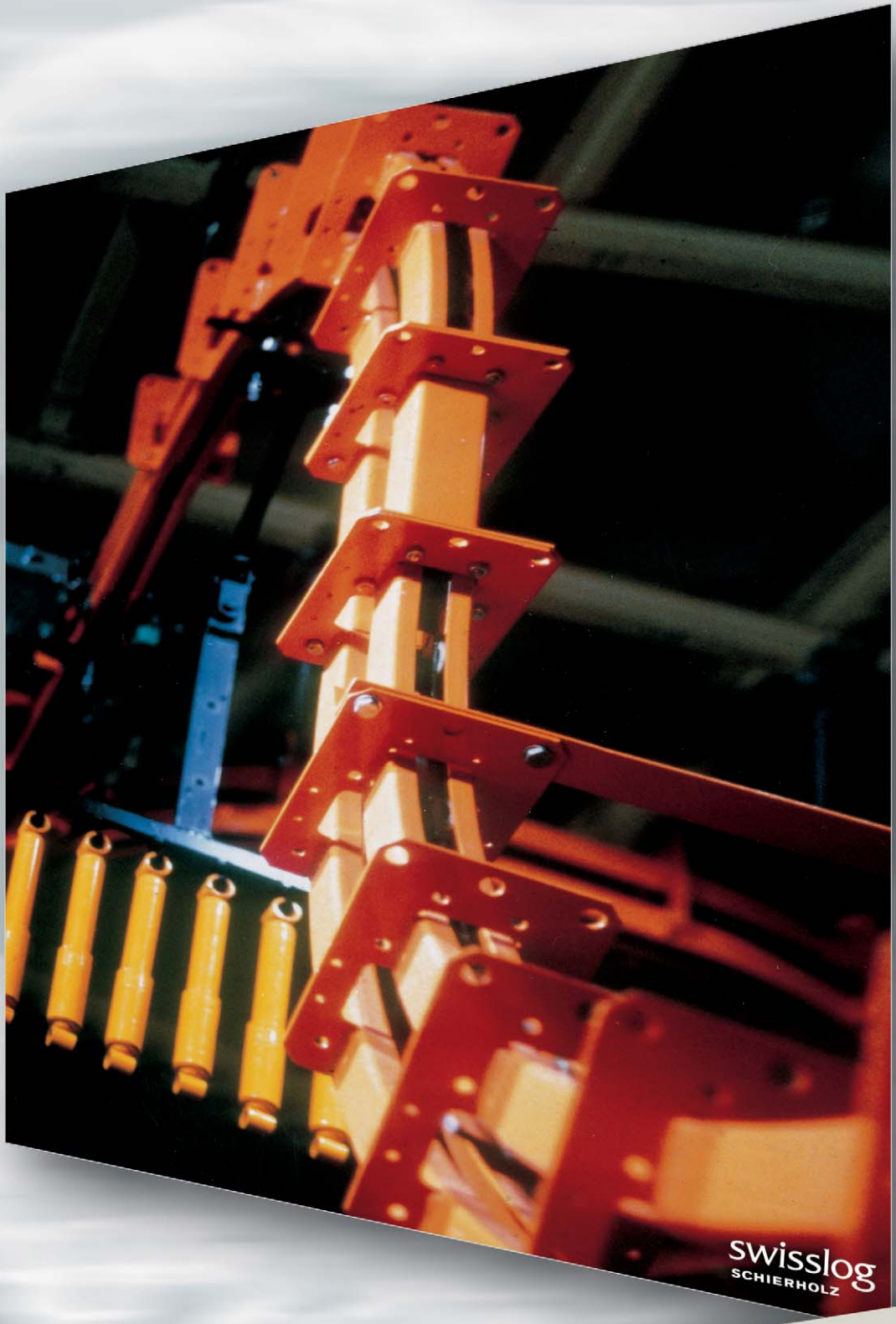

electronics

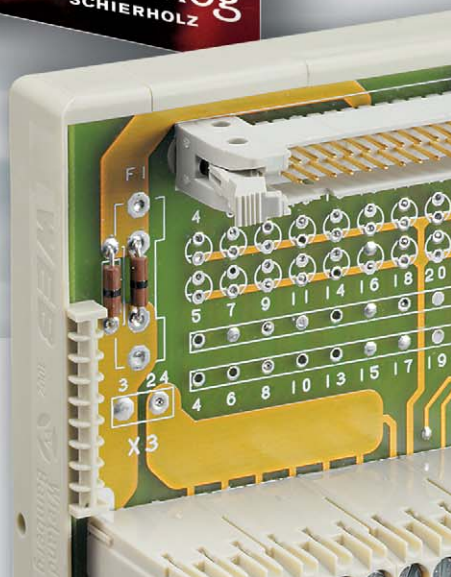

Electronic components

Interface systems

passive interfaces

Interface modules

Interface modules make the connection between electronic and electrical components within the control panel.

The control signals from prefabricated plug connections are converted into terminal connections.

The use of Wieland interface modules provides the following benefits for system wiring:

- ❒ Simple process which saves time during design and costing
- ❒ Rapid wiring, commissioning and fault elimination due to clear cabling and pole designations
- ❒ Reduction of wiring errors
- ❒ Compact due to high packing density

The interface modules are fitted as standard with a mounting foot for DIN / EN mounting rails TS 35 or TS 32.

Available interface modules:

Subminiature D-SUB connector in accordance with DIN 41652

Subminiature connectors are increasingly used in telecommunications engineering, text and data processing as well as in measuring and control engineering.

The typical trapezoidal metal protective shrouds (galvanised and yellow passivated steel) that are used for this range of connectors guarantee that poles are connected correctly.

The metal shroud is fed onto a terminal to ensure a reliable looping through of the earth.

IDC header in accordance with DIN 41651

The flat ribbon connectors are used more frequently at the interface between the electronics and conventional electrical components.

The use of locking brackets in various lengths stops the socket connector from being separated from the plug connector due to vibration.

Central polarisation prevents any incorrect connections.

Interface modules for S5

These interface modules have been specially designed for the Siemens range of programmable controllers SIMATIC" S5-115U to 155U. The interface modules take the place of the current I/O connection technology (screw or crimp connection) by implementing the transition from the I/O card to a multipole ribbon connector in accordance with DIN 41651.

Special interface modules are used to connect the sensors and actuators directly to the I/O plug system. An optimum adaptation to the respective PLC module is thereby achieved.

Universal modules for a variety of applications complete this system range.

Overview of interface modules for SIMATIC®

S5-115U

- ❒ Digital input/output module for 32 channels
- ❒ Input/output plug system, 46 pole front plug
- ❒ Universal module for digital and analogue modules with 46 pole front plug connection

S5-135U to 155U

- ❒ Digital input/output module for 32 channels
- ❒ Input/output plug system, 42 pole front plug
- ❒ Universal module for digital and analogue modules with 42 pole front plug connection
- ❒ Relay output modules with master and expansion modules
- ❒ Initiator module for three-conductor initiators

Flat round cable with/without shielding, 50 pole, prefabricated in various lengths for connecting the front plug to the interface modules.

Further customer-specific interface modules are available on request.

Interface System
D-Sub to screw terminal

passive interfaces

D-SUB connector to screw terminal

Approvals: UL in preparation
Overall width x 80 x 61

Number of poles	Overall width (mm)	Type	Part No..	Box Qty
D-Sub-female				
9	38,7	female D-Sub9	87.200.2200.3	1
15	48,2	female D-Sub15	87.200.2201.3	1
25	74,0	female D-Sub25	87.200.2202.3	1
37	106,0	female D-Sub37	87.200.2203.3	1
50*	141,0	female D-Sub50	87.200.2204.3	1
D-Sub-male				
9	38,7	male D-Sub9	87.200.2205.3	1
15	48,2	male D-Sub15	87.200.2206.3	1
25	74,0	male D-Sub25	87.200.2207.3	1
37	106,0	male D-Sub37	87.200.2208.3	1
50*	141,0	male D-Sub50	87.200.2209.3	1
* contacts arranged in 3 groups				
Wiring diagrams, dimensions		**See page 570**		
Technical data				
Maximum nominal voltage		60 V AC / 75 V DC		
Maximum nominal current		1,5 A		
Wire range		22 – 12 AWG		
finely stranded		0,5 – 2,5 mm²		
single core		0,5 – 4 mm²		
Ambient temperature		0...+50 °C		
Installation of mounting rail		TS 35 or TS 32		
Norms/specifications		VDE 0110b Gr. 2		
Terminal strip X2		Type 8191E (x poles)		

Subject to change without further notice

IDC header to screw terminal

passive interfaces

IDC connector to screw terminal
Approvals: UL in preparation
Overall width x 80 x 61

Number of poles	Overall width (mm)	Type	Part No..	Box Qty
10	48,2	FLK-SR10	87.210.2201.3	1
14	48,2	FLK-SR14	87.210.2202.3	1
16	61,1	FLK-SR16	87.210.2203.3	1
20	61,1	FLK-SR20	87.210.2204.3	1
26	70,8	FLK-SR26	87.210.2205.3	1
34	93,1	FLK-SR34	87.210.2207.3	1
40	109,0	FLK-SR40	87.210.2208.3	1
50	131,7	FLK-SR50	87.210.2210.3	1
60	160,5	FLK-SR60	87.210.2211.3	1
64	173,8	FLK-SR64	87.210.2212.3	1

Wiring diagrams, dimensions	**See page 570**
Technical data	
Maximum nominal voltage	60 V AC / 75 V DC
Maximum nominal current	1,0 A
Wire range	22 – 12 AWG
finely stranded	0,5 – 2,5 mm^2
single core	0,5 – 4 mm^2
Ambient temperature	0...+50 °C
Installation of mounting rail	TS 35 or TS 32
Norms/specifications	VDE 0110b Gr. 2
Terminal strip X2	Type 8191E(x poles)

passive interfaces

for S5-115U

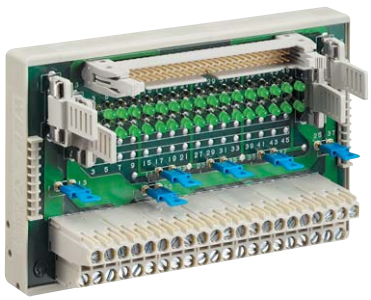

Digital I/O

Dimensions (mm): W x H x D
128.5 x 80 x 61

Approvals:

Description	Type	Part No.	Box Qty
Digital I/O with LED	EAS-UE/D-L-115	87.221.6053.0	1
Digital I/O without LED	EAS-UE/D-115	87.221.5953.0	1
Wiring diagrams, dimensions	**See page 571**		
Technical data			
Nominal voltage with LED	24 V DC		
Nominal voltage without LED	75 V DC / 60 V AC		
Nominal current per LED	5 mA		
Nominal current:			
connections 1, 13, 25, 37 maximum	4 x 2.5 A oder 1 x 10 A		
all remaining connections, maximum	0.5 A		
Ambient temperature	0...+60 °C		
Storage temperature	–40...+70 °C		
Wire range (X8)	22 – 12 AWG		
finely stranded	0.5 – 2.5 mm^2		
single core	0.5 – 4 mm^2		
Installation of mounting rail	TS 35 or TS 32		
Terminal strip X8	Type 8191E		
Accessories			
Suitable 46 pole front plug (115U		87.221.5853.0	4
Notes for application			
Application (digital I/O with LED)			
Digital output modules	6ES5 441-7LA11	Fa. Siemens	
	6ES5 451-7LA11	Fa. Siemens	
Digital input modules	6ES5 420-7LA11	Fa. Siemens	
	6ES5 430-7LA11	Fa. Siemens	
Application (digital I/O without LED)			
Digital output modules	6ES5 441-7LA11	Fa. Siemens	
	6ES5 451-7LA11	Fa. Siemens	
	6ES5 457-7LA11	Fa. Siemens	
	6ES5 458-7LA11	Fa. Siemens	
	6ES5 482-7LA11	Fa. Siemens	

Subject to change without further notice

passive interfaces

for S5-115U

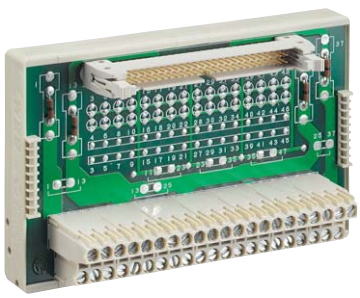

Universal module

Dimensions (mm): W x H x D
128.5 x 80 x 61

Approvals:

Description	Type	Part No..	Box Qty
Universal module	UNIVERSAL-S5	87.221.6353.0	1
Wiring diagrams, dimensions	**See page 571**		
Technical data			
Maximum nominal voltage	74 V DC / 60 V AC		
Nominal current:			
connections 1, 13, 25, 37 maximum	2.5 A		
all remaining connections, maximum	0.5 A		
Ambient temperature	0...+60 °C		
Storage temperature	–40...+70 °C		
Wire range (X2)	22 – 12 AWG		
finely stranded	0.5 – 2.5 mm^2		
single core	0.5 – 4 mm^2		
Installation of mounting rail	TS 35 or TS 32		
Terminal strip X2	Type 8191E		
Accessories			
Suitable 46 pole front plug (115U)		87.221.5853.0	4

electronics

passive interfaces

for S5-135U to 155U

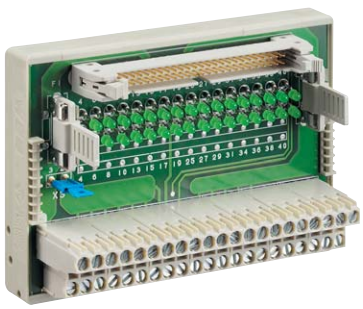

Dimensions (mm): W x H x D
115.5 x 80 x 61

Digital I/O

Approvals:

Description	Type	Part No..	Box Qty
Digital I/O with LED	EAS-UE/D-L-135	87.222.6053.0	1
Digital I/O without LED	EAS-UE/D-135	87.222.5953.0	1
Wiring diagrams, dimensions	**See page 572**		
Technical data			
Nominal voltage with LED	24 V DC		
Nominal voltage without LED	75 V DC / 60 V AC		
Nominal current per LED	5 mA		
Nominal current:			
Screw terminals 3 and 24, maximum	2 x 5 A (without plug-in jumper)		
	1 x 10 A (with plug-in jumper)		
all remaining connections, maximum	0.5 A		
Ambient temperature	0...+60 °C		
Storage temperature	–40...+70 °C		
Wire range (X8)	22 – 12 AWG		
finely stranded	0.5 – 2.5 mm^2		
single core	0.5 – 4 mm^2		
Installation of mounting rail	TS 35 oder TS 32		
Terminal strip X2	Type 8191E		
Accessories			
Suitable 42 pole front plug (135U/155U)	87.222.5853.0	5	
Notes for application			
Digital output modules	6ES5 441-74UA12	Fa. Siemens	
	6ES5 451-74UA12	Fa. Siemens	
Digital input modules	6ES5 420-74UA12	Fa. Siemens	
	6ES5 430-74UA12	Fa. Siemens	
Digital input/output modules	6ES5 482-4UA12	Fa. Siemens	

Subject to change without further notice

passive interfaces

for S5-135U to 155U

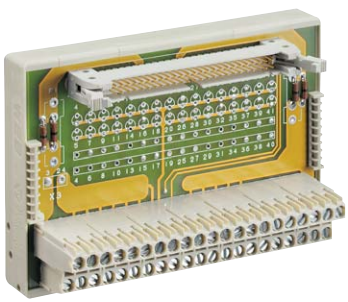

Universal module
Profibus DP

Approvals:

Dimensions (mm): W x H x D
115.5 x 80 x 61

Description	Type	Part No..	Box Qty
Universal module	UNIVERSAL-S5	87.222.6353.0	1
Wiring diagrams, dimensions	**See page 572**		
Technical data			
Nominal voltage	24 V DC		
Nominal current:			
Screw terminals 3 and 24, maximum	5 A		
all remaining connections, maximum	0,5 A		
Ambient temperature	0...+60 °C		
Storage temperature	–40...+70 °C		
Wire range (X8)	22 – 12 AWG		
finely stranded	0,5 – 2,5 mm²		
single core	0,5 – 4 mm²		
Installation of mounting rail	TS 35 or TS 32		
Terminal strip X2	Type 8191E		
Accessories			
Suitable 42 pole front plug (135U/155U)	87.222.5853.0	5	

electronics

Interface System

passive interfaces

for S5-115U to 155U

Important note for users:
The relay outputs must be supplied from the same phase (e.g. L1).

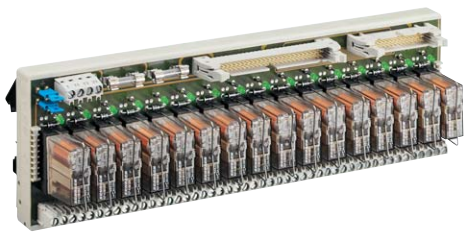

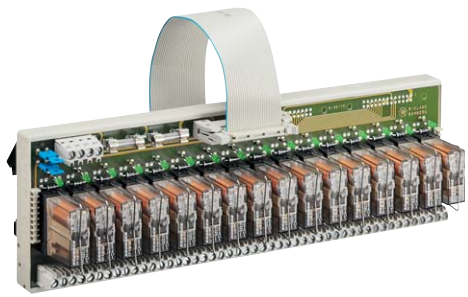

Both modules (main module and expansion module) are linked with a flat ribbon cable which is supplied with the expansion module.

Dimensions (mm): W x H x D
250 x 80 x 71

Description	Main module: Type	Part No..	Box Qty	Expansion module: Type	Part No..	Box Qty
	RAB-FS16 W A-S5	87.221.6653.0	1	RSB-FS16 W B-S5	87.221.6753.0	1
Wiring diagrams, dimensions, Limit curve	**See page 573**			**See page 573**		
Technical data						
Input data						
Operating voltage	24 V DC +10% / –15%			24 V DC +10% / –15%		
Nominal current per input	25 mA			25 mA		
Nominal capacity	0.6 W			0.6 W		
Status display	Green LED			Green LED		
Output data						
Maximum switching voltage	250 V AC/DC(2)			250 V AC/DC(2)		
Maximum switching current	8 A AC/DC(2)			8 A AC/DC(2)		
Maximum continuous current	5 V AC/DC(2)			5 V AC/DC(2)		
Maximum switching capacity (resistive load)	2000 VA/192W(2))			2000 VA/192W(2)		
Minimum switching voltage	12 V			12 V		
Minimum switching current	100 mA			100 mA		
General data						
Pickup delay	ca. 8 ms			ca. 8 ms		
Dropout delay	ca. 8 ms			ca. 8 ms		
Contact material	AgCdO			AgCdO		
Electrical endurance (resistive load)						
24 V DC / 2 A	5×10^6 Switching cycles			5×10^6 Switching cycles		
24 V DC / 5 A	$2{,}5 \times 10^6$ Switching cycles			2.5×10^6 Switching cycles		
220 V AC / 1 A	1×10^6 Switching cycles			1×10^6 Switching cycles		
220 V AC / 5 A	2.5×10^5 Switching cycles			2.5×10^5 Switching cycles		
Isolation voltage between input/output	4 kV			4 kV		
Ambient temperature	0 °C...+1) °C			0 °C...+1) °C		
Storage temperature	–40...+70 °C			–40...+70 °C		
Wire range	22 – 12 AWG			22 – 12 AWG		
finely stranded	0.5 – 2.5 mm^2			0.5 – 2.5 mm^2		
single core	0.5 – 4 mm^2			0.5 – 4 mm^2		
Installation of mounting rail	TS 35 and TS 32			TS 35 and TS 32		
Accessories						
Suitable 46 pole front plug (115U)		87.221.5853.0	4		87.2221.5853.0	4
Suitable 42 pole front plug (135U/155U)		87.222.5853.0	5		87.222.5853.0	5
Notes for application						
Digital output modules	6ES5 441-7LA11	Fa. Siemens		6ES5 441-7LA11	Fa. Siemens	
	6ES5 451-7LA11	Fa. Siemens		6ES5 451-7LA11	Fa. Siemens	
	6ES5 441-4UA12	Fa. Siemens		6ES5 441-4UA12	Fa. Siemens	
	6ES5 451-4UA12	Fa. Siemens		6ES5 451-4UA12	Fa. Siemens	

Subject to change without further notice

passive interfaces

for S5-135U to 155U

42 pole front plug

Approvals:
1 module location

Dimensions (mm): W x H x D

Description	Type	Part No..	Box Qty
42 pole front plug	135/150	87.222.5853.0	5
Connection via 50 pole ribbon plug connector (X3)			
in accordance with DIN 41651			
Wiring diagram	**See page 574**		
Technical data			
Operating voltage maximal	75 V DC / 60 V AC		
Front plug connection no3 and 24			
for connection via a front connector	6 A		
for connection via ribbon plug connector (6 parallel pins)	5 A		
all remaining connections	0.5 A		
Ambient temperature	0...+55 °C		
Storage temperature	–40...+70 °C		
Notes for application			
The ribbon plug connectors (X3) is fitted as standard with			
long interlocking hooks. IDC connectors with strain relief			
brackets are recommended for the connection of IDC			
headers.			

Subject to change without further notice

Flat round cable

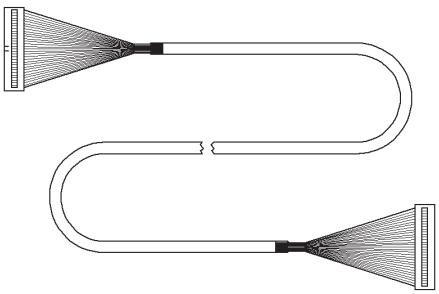

Description	Flat round cable with shielding			Flat round cable without shielding		
	Type	Part No..	Box Qty	Type	Part No..	Box Qty
1.0	FRK-S 100	08.000.0106.0		FRK 100	08.000.0107.4	
1.5	FRK-S 150	08.000.0106.1		FRK 150	08.000.0107.5	
2.0	FRK-S 200	08.000.0106.2		FRK 200	08.000.0107.6	
2.5	FRK-S 250	08.000.0106.3		FRK 250	08.000.0107.7	
3.0	FRK-S 300	08.000.0106.4		FRK 300	08.000.0107.8	
3.5	FRK-S 350	08.000.0106.5		FRK 350	08.000.0108.9	
4.0	FRK-S 400	08.000.0106.6		FRK 400	08.000.0108.0	
4.5	FRK-S 450	08.000.0106.7		FRK 450	08.000.0108.1	
5.0	FRK-S 500	08.000.0106.8		FRK 500	08.000.0108.2	
6.0	FRK-S 600	08.000.0106.9		FRK 600	08.000.0108.3	
7.0	FRK-S 700	08.000.0107.0		FRK 700	08.000.0108.4	
8.0	FRK-S 800	08.000.0107.1		FRK 800	08.000.0108.5	
9.0	FRK-S 900	08.000.0107.2		FRK 900	08.000.0108.6	
10.0	FRK-S 1000	08.000.0107.3		FRK 1000	08.000.0108.7	
Technical data						
Nominal voltage	75 V DC / 60 V AC			75 V DC / 60 V AC		
Maximum permitted voltage per core	0.85 A			0.85 A		
Maximum permitted total current of all cores	20 A			20 A		
Number of poles	50			50		
Cross-section	AWG 28 (7 x 0.127 mm Ø)			AWG 28 (7 x 0.127 mm Ø)		
Conductor material (tinned flexible leads)	Cu			Cu		
Maximum conductor resistance	230 Ω/km			230 Ω/km		
Capacitance	75 pF/m			75 pF/m		
Impedance	115 Ω			115 Ω		
Thermal stability	–20...+80 °C			–20...+80 °C		
Isolation	PVC			PVC		
IDC connector (with strain relief)	DIN 41651			DIN 41651		
Overall diameter	11.6 mm			11.1 mm		

passive interfaces

D-Sub connector to screw terminal

Wiring diagram

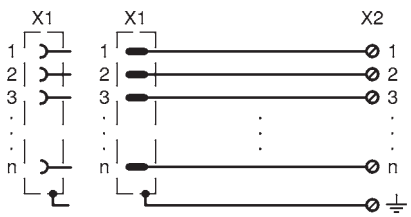

Dimensions

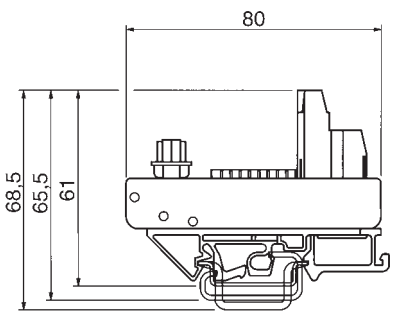

IDC connector to screw terminal

Wiring diagram

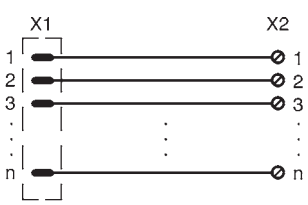

Dimensions

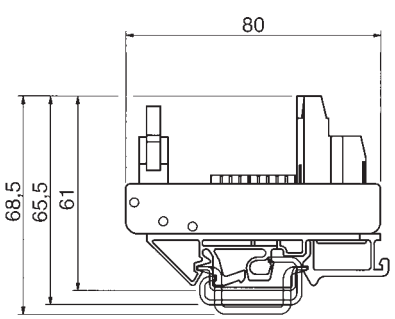

Subject to change without further notice

Interface module for S5-115U Digital I/O

Wiring diagram

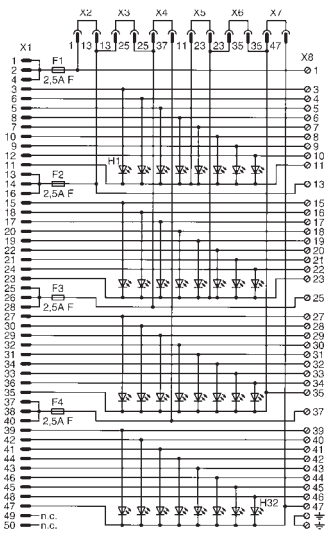

Dimensions

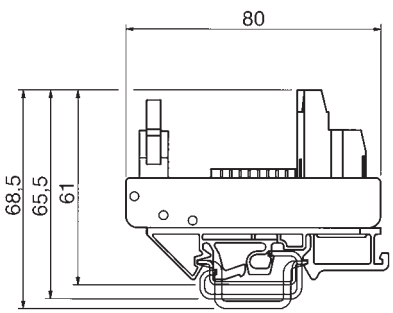

Interface module for S5-115U Universal module

Wiring diagram

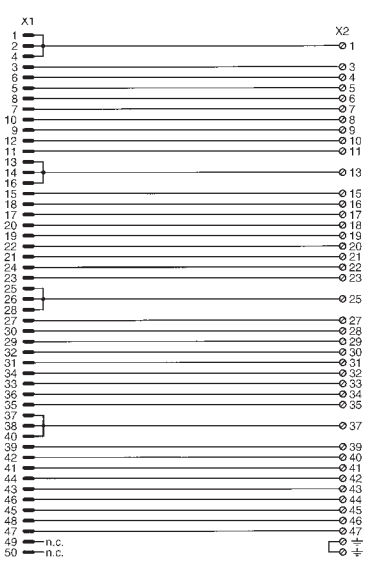

Dimensions

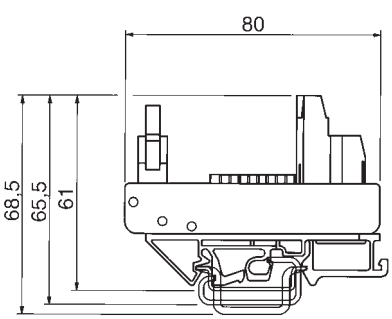

passive interfaces

Interface module for S5-135U to 155U Digital I/O

Wiring diagram

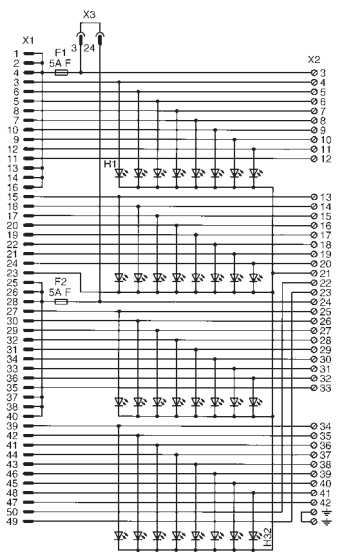

Dimensions

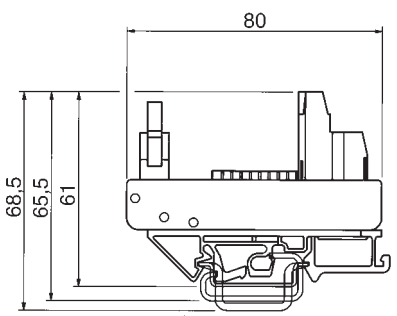

Interface module for S5-135U to 155U Universal module

Wiring diagram

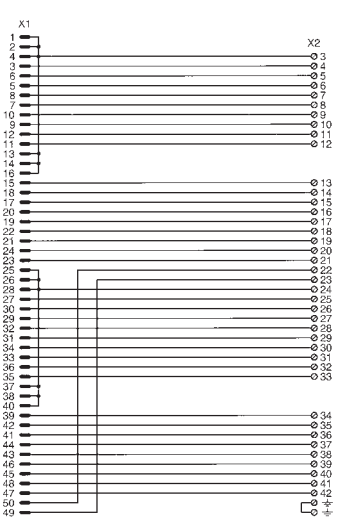

Dimensions

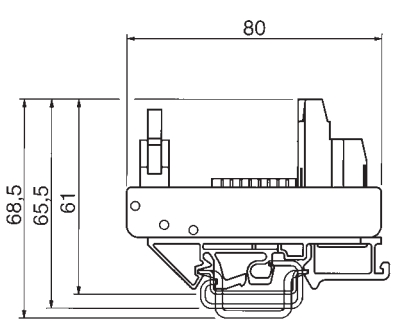

Subject to change without further notice

Wiring diagram

Relay output module for S5-115U to 155U Main module

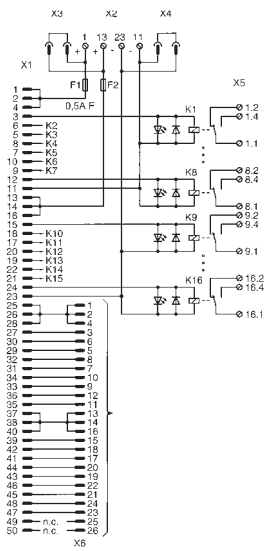

Relay output module for S5-115U to 155U Expansion module

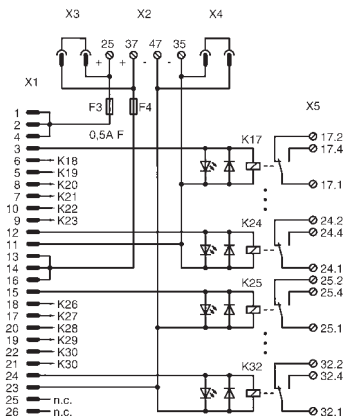

Derating[1)]

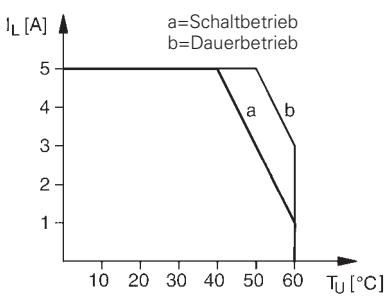

Direct voltage limit curve[2)]

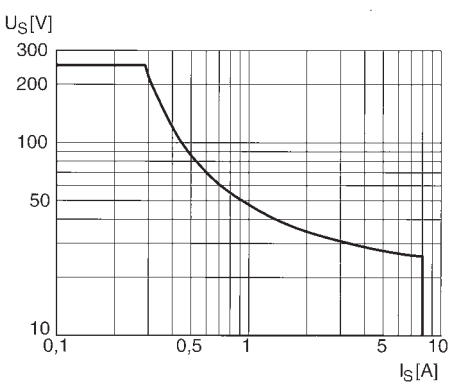

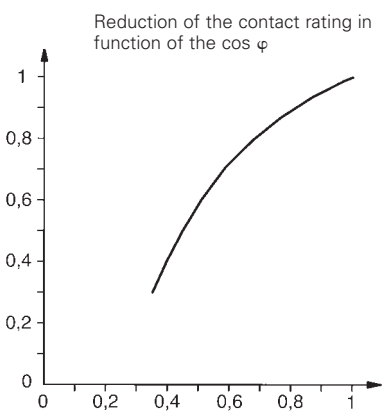

Dimensions

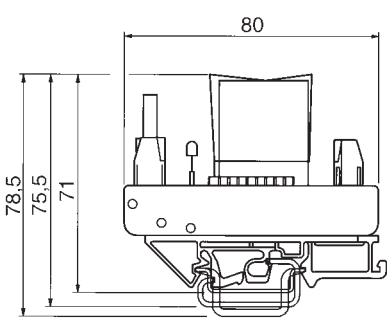

interface for S5

I/O plug system for S5-135U to 155U

S42 pole front plug

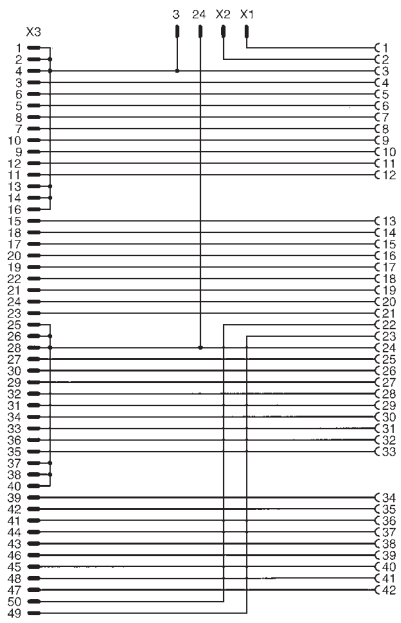

Subject to change without further notice

Empty housings

housing system

dipos
WEB
WEB 1001/1002
WEG
wieBOX
Labelling systems

Wielands empty housings offer:

- Universal application
- Individual modules
- Ranges that can be fitted together
- Complete housing systems
- Connectable housing
- Potentials can be bridged
- Screw or spring-clamp terminal
- Sealable
- Possibility of group labelling

CE In general all Wieland components which are obliged to have the CE identification are provided with the CE mark

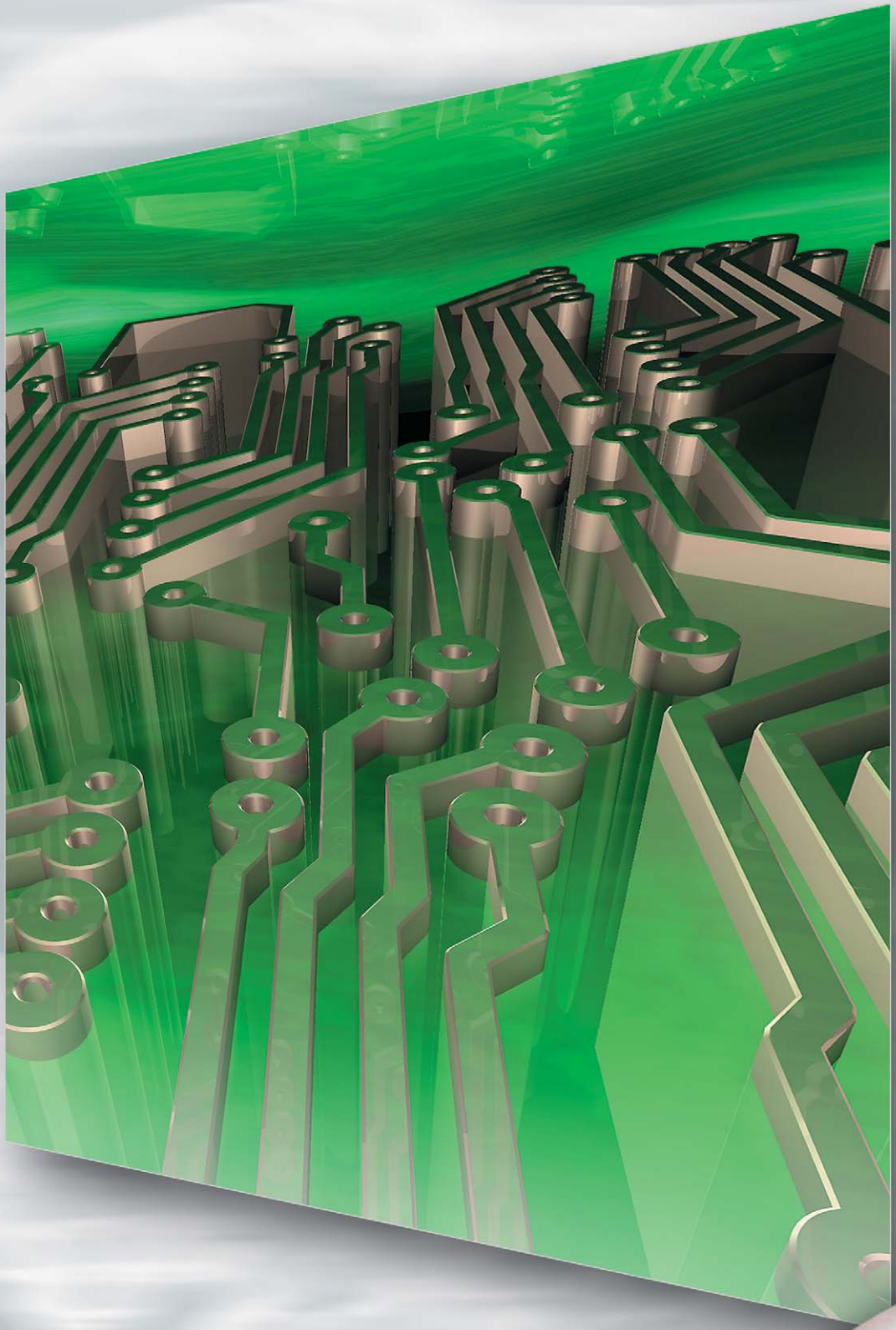

electronics

Electronic components

Empty housings

Electronic empty housings

housing system

Empty housing features

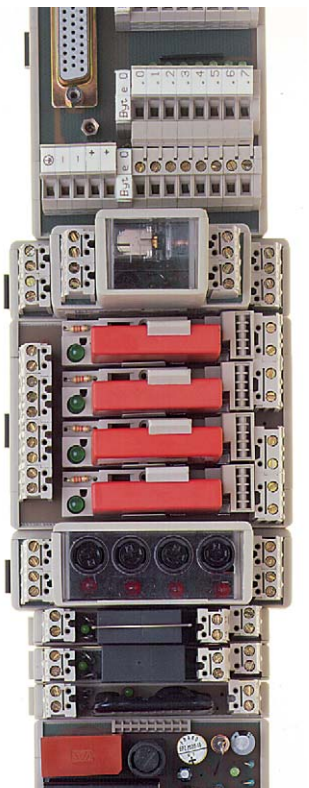

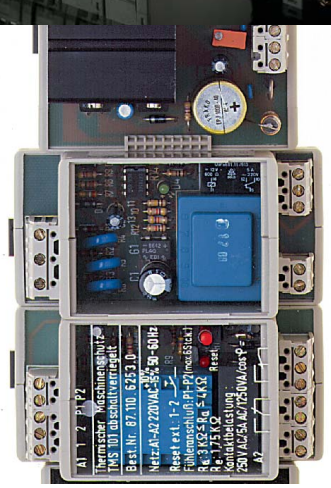

WEB-Range

- ❒ installation housings, suitable for a variety of uses
- ❒ series of housings can be fitted together
- ❒ as individual modules
- ❒ or can be fitted together as a complete system
- ❒ mounting foot for all common mounting rails TS 35/TS 32
- ❒ to house fully equipped PCBs with various connection systems
- ❒ Can be used in such areas as:
  - – device and control systems for consumer electronics
  - – industrial electronics
  - – control engineering
  - – data systems engineer
  - – suitable for universal applications
- ❒ design available with/without components fitted (see "Electronic components" for designs with components)
- ❒ distribution of electronic components to take up minimum space
- ❒ WEB housing provides protection for sensitive components
- ❒ Wieland's system solution: Safety and functionality with field tested connection systems + high quality compact designs
- ❒ its advantages:
  - – long service life, even under extreme conditions
  - – technical design perfection
  - – reliability
  - – low costs
  - – problem-free application
  - – many housing variations

WEB 1001
closed design

- ❒ construction of upto 9 housing configurations without tools and using just a few individual parts
- ❒ connection system
  - – PCB terminals
  - – direct and two part pluggable connectors
  - – push-on terminals
  - – etc.
- ❒ PCB can be fitted with components and soldered independently of the housing
- ❒ Width of the design: from an overall housing height of 42 mm and PCB size (92,3 x 22,3 mm) up to 68 mixed connections in multi-tier design
- ❒ closed design provides protection for the electronic components
- ❒ with transparent cover for checking displays etc.
- ❒ Marker facility on the housing

WEB 1001 WEB 1002
open housing

- ❒ height of this series only 15,8 mm (without U-Foot)
- ❒ open modules can be assembled using the 3 different elements to form any length
- ❒ complete sets of special components can be fitted
- ❒ numerous facilities for connecting external conductors, screw, pluggable, two part and push on terminals
- ❒ system advantages:
  - – can be assembled quickly due to the plug-in modular system principle
  - – high torsional rigidity due to the firm interconnection of the individual elements
  - – can be fitted to all DIN EN mounting rails 32/35 using the universal foot

wieBox CN range

- ❒ for assembling electronic components
- ❒ housing designed with twin shell casing
- ❒ in three different designs widths 19 mm, 22,5 mm and 26 mm
- ❒ can be fitted with 2 or 3 pole terminals which are provided with a left or right angled soldering pins
- ❒ insertion of the 2 pole supply terminals in 19mm housing possible up to a maximum of 8 poles
- ❒ 3 pole terminals up to a maximum of 12 poles can be used for the design widths 22,5 mm and 26 mm
- ❒ housing can be selected with or without ventilation slots
- ❒ mounting foot for TS 35 mounting rail
- ❒ with solid or removable front panels:
  - – for plugging in or latching in

Subject to change without further notice

housing system

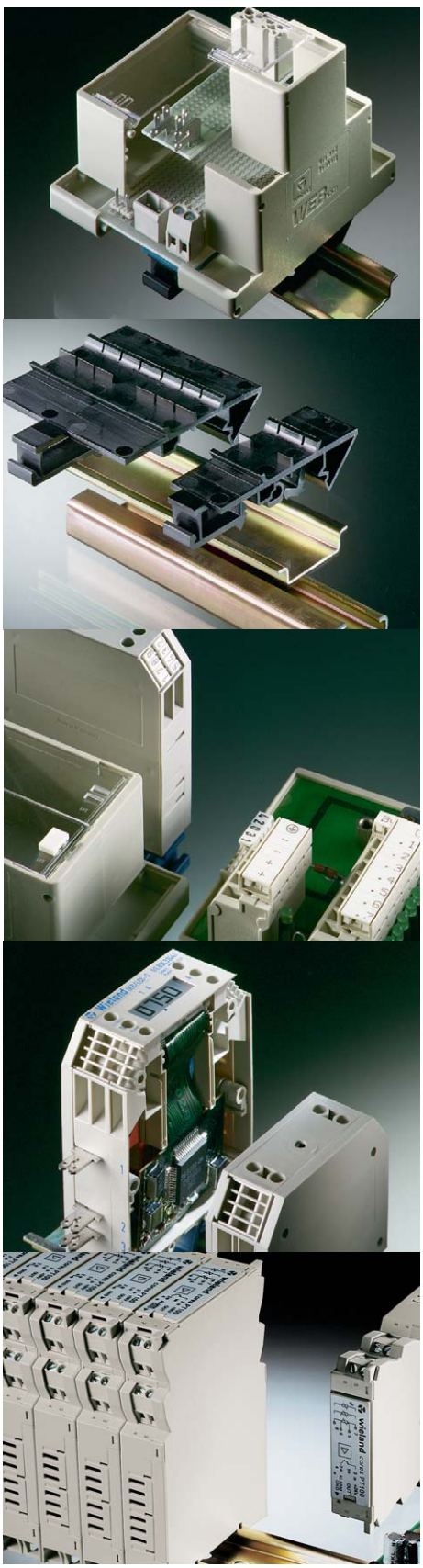

WEB connection system

- independent of the housing component
- up to 68 connections per housing
- no type of connection prescribed therefore screw, puggable, two-part terminals or even mixed systems can be used

Handling

- PCBs can be fitted with components independantly of the housing
- mechanical soldering of the PCB to the terminals and components, also regard less of the housing.
- horizontal (WEB) or vertical (WEG) arrangement of the PCB's on several levels within the housing
- housing components can be fitted together

Attachment to the mounting rail

- by means of a slot mounting facility for one or more mounting feet
- U-foot for TS 32 and TS 35

WEG-Empty housings

- compact housing made from high quality material
- closed housing available in four different sizes
- distribution of electronic components to take up minimum space
- WEG-Empty housings provide protection for sensitive components
- design widths: between 16,5 mm and 28,5 mm
- design height: either 70,5 mm or 98 mm
- modules of various lengths can be mounted side by side using the U-foot which snaps into place on the DIN rail
- space saving arrangement of electronic components both on DIN rail and on G rail (U-foot)
- connection by screw terminal
- supplied:
  – pre-assembled
  – connecting terminal plates supplied
- connection of single core and finely stranded conductors from 0,14 mm^2 to 6 mm^2, stranded conductors from 0,14 mm^2 to 4 mm^2

Labelling systems

- clip-in terminal and housing markers
- multi digit marker tags
- single tag, marker strips
- marker branch
- individual labelling possible using figures or symbols

WEB
closed housing

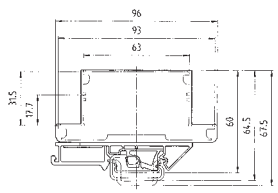

WEB
closed housing

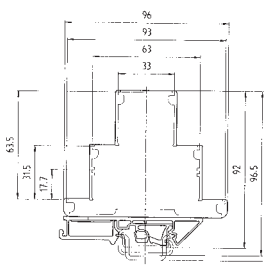

WEB
open housing

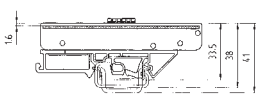

WEB
open housing

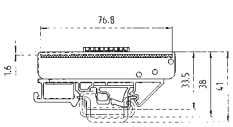

WEG

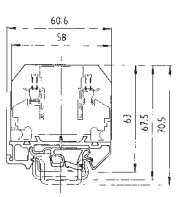

WEG

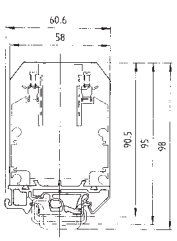

wieBOX

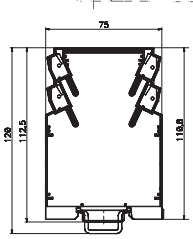

electronics

Electronic empty housings

dipos

Typical applications

- ❒ relay modules
- ❒ timer relay modules
- ❒ optocoupler (solid state) modules
- ❒ compact power supply units
- ❒ converter for standard analogue signals
- ❒ signal conditoning for RTD's and thermocouples
- ❒ programmable signal conditioning
- ❒ potential monitors
- ❒ overvoltage protection
- ❒ low cost I/O system
- ❒ fieldbus interfacing

Possible applications and markets

- ❒ mechanical and system engineering
- ❒ electrical/electronics industry, device manufacturer
- ❒ chemical industry and process automation
- ❒ power engineering and power stations
- ❒ building technology, heating, ventilation and air conditioning technology (HVAC)
- ❒ car industry, aircraft, ships
- ❒ consumer goods
- ❒ foodstuffs
- ❒ utilities
- ❒ monitoring of environmental pollutions
- ❒ traffic control

Subject to change without further notice

dipos

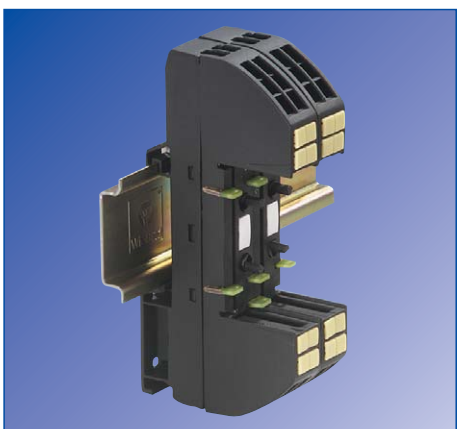

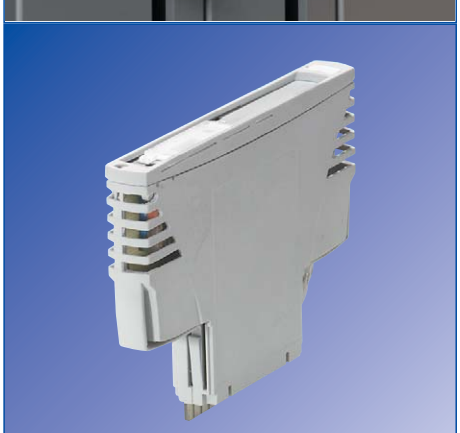

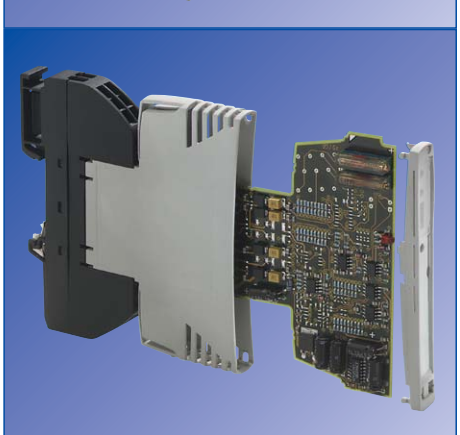

Properties of the housing

- ❒ variety of housings for industrial process and building automation
- ❒ connectable housing consisting of module boards and modular top sections
- ❒ housing can be extended in the future in 5 mm intervals
- ❒ 4 (at an overall width of 12.5 mm) or 6 (at an overall width of 17.5 mm) potentials can be bridged between modules
- ❒ 8 connections in an overall width of 12.5 mm
- ❒ type of connection can be freely selected: screw or spring-clamp terminal
- ❒ integral connection
- ❒ labelling not covered by wiring
- ❒ each connection can be marked with its own marker tag
- ❒ coloured marker tags available
- ❒ group labelling in the base and on cover of housing
- ❒ Locking cover – to prevent unwanted changes
- ❒ ventilation slots
- ❒ PCB is terminal free
- ❒ module board for TS 32 and TS 35 mounting rails

Electronic empty housing
Modular housing system

dipos

Housing properties:
- connectable housing
- various design widths
- potential bridging between housings
- at least 8 connections
- connection type: screw or spring clamp

Dimensions (mm): W x H x D	Approvals: UL, CSA in preparation 12.5 x 100 x 100 (Standard)			Approvals: UL, CSAin preparation 17.5 x 100 x 100 (Standard)		
Description	Type	Part No.	Box Qty	Type	Part No.	Box Qty
Module board *dipos* UMC						
with screw terminals (screw thread M3)		80.060.0000.1			80.060.1000.1	
with spring clamp		80.060.0001.1			80.060.1001.1	
Empty housings		80.061.0010.3			80.061.1010.3	
Dimensions of housing and module board	**See page 600**			**See page 600**		
Technical data	Type	Part No.	Box Qty	Type	Part No.	Box Qty
Rated voltage	230/400 V AC			230/400 V AC		
Maximum rated current	10 A per contact			10 A pro contakt		
Total current	10 A			10 A		
Overvoltage category	III			III		
Degree of pollution	2			2		
Connections per side	4 Klemmen, 4 Potenziale pro Seite			6 Klemmen, 6 Potenziale pro Seite		
Wire range of screw terminals						
finely stranded/stranded	0.2 mm^2 – 2.5 mm^2			0.2 mm^2 – 2.5 mm^2		
single core	0.2 mm^2 – 4 mm^2			0.2 mm^2 – 4 mm^2		
flexible with AE with/without plastic sleeve	0.25 mm^2 – 2.5 mm^2 / 0.25 mm^2 – 1.5 mm^2			0.25 mm^2 – 2.5 mm^2 / 0.25 mm^2 – 1.5 mm^2		
AWG	24 – 12			24 – 12		
Tightening torque	0.5 – 0,6 Nm			0.5 – 0,6 Nm		
Wire range of spring-clamp terminal	0.08 mm^2 – 2.5 mm^2			0.08 mm^2 – 2.5 mm^2		
with AE	0.08 mm^2 – 1.5 mm^2			0.08 mm^2 – 1.5 mm^2		
AWG	28 – 12			28 – 12		
Maximum number of bridge to flanking unit	4			6		
Fire protection	V2			V2		
Type of protection	IP 20			IP 20		
Ambient temperature	–25 °C...+100 °C			–25 °C...+100 °C		
Storage temperature	–40 °C...+100 °C			–40 °C...+100 °C		
Regulations, norms	EN 60947-1			EN 60947-1		
	DIN EN 50178			DIN EN 50178		
	DIN VDE 0611 T1			DIN VDE 0611 T1		
	VDE 0110			VDE 0110		
	VDE 106			VDE 106		
Accessories						
Coding branch		Z5.563.0453.0	25		Z5.563.0453.0	25
Plug-in jumper		Z8.000.0229.5	50		Z8.000.0229.5	50
Large marker tag, white, blank		04.249.4053.0	500		04.249.4053.0	500
Small marker tag						
unmarked, red		04.249.1053.0	500		04.249.1053.0	500
unmarked, blue		04.249.1553.0	500		04.249.1553.0	500
unmarked, white		04.249.2053.0	500		04.249.2053.0	500

Subject to change without further notice

dipos

Housing properties:
- connectable housing
- various design widths
- potential bridging between housings
- at least 8 connections
- connection type: screw or spring clamp

Dimensions (mm): W x H x D

Approvals: UL, CSA in preparation
22.5 x 100 x 100 (Standard)

Description	Type	Part No.	Box Qty
Module board *dipos* UMC			
with screw terminals (screw thread M3)		80.060.2000.1	
with spring clamp		80.060.2001.1	
Empty housings		80.061.2010.3	
Dimensions of housing and module board	**See page 600**		
Technical data	Type	Part No.	Box Qty
Rated voltage	230/400 V AC		
Maximum rated current	10 A per contact		
Total current	10 A		
Overvoltage category	III		
Degree of pollution	2		
Connections per side	8 Klemmen, 6 Potenziale pro Seite		
Wire range of screw terminals			
finely stranded/stranded	0.2 mm^2 – 2.5 mm^2		
single core	0.2 mm^2 – 4 mm^2		
flexible with AE with/without plastic sleeve	0.25 mm^2 – 2.5 mm^2 / 0.25 mm^2 – 1.5 mm^2		
AWG	24 – 12		
Tightening torque	0.5 – 0.6 Nm		
Wire range of spring-clamp terminal	0.08 mm^2 – 2.5 mm^2		
with AE	0.08 mm^2 – 1.5 mm^2		
AWG	28 – 12		
Maximum number of bridge to flanking unit	6		
Fire protection	V2		
Type of protection	IP 20		
Ambient temperature	–25 °C...+100 °C		
Storage temperature	–40 °C...+100 °C		
Regulations, norms	EN 60947-1		
	DIN EN 50178		
	DIN VDE 0611 T1		
	VDE 0110		
	VDE 106		
Accessories			
Coding branch		Z5.563.0453.0	25
Plug-in jumper		Z8.000.0229.5	50
Large marker tag, white, blank		04.249.4053.0	500
Small marker tag			
unmarked, red		04.249.1053.0	500
unmarked, blue		04.249.1553.0	500
unmarked, white		04.249.2053.0	500

electronics

Electronic empty housings

WEB

Possible areas of application:
- devices and controllers for consumer electronics
- industrial electronics
- control technology
- data technology

Material:

Housing:	PA 6	UL 94-HB
Foot:	PA 66	UL 94-V2
Cover:	PC	UL 94-HB

Dimensions (mm): W x H x D / for PCB	**Size 1** 27 x 42 x 96 / for PCB 93 x 22			**Size 2** 27 x 74 x 96 / for PCB 93/63 x 22		
Description		Part No.	Box Qty		Part No.	Box Qty
Empty housing, complete with U-Foot, without PCB		87.010.0053.0	10		87.020.0053.0	10
Empty housing, complete with Foot TS 35, without PCB		86.010.0053.0	10		86.020.0053.0	10
(The empty housings are supplied unassembled and without PCBs)	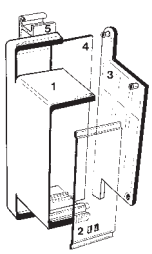			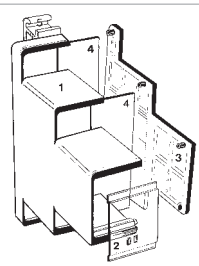		
Housing dimensions	**See page 601**			**See page 601**		
Individual parts						
1. Housing		01.001.5153.0	50		01.001.5053.0	
2. Cover with marking facility		04.312.0654.0	50		04.312.0554.0	50
Cover without marking facility						
3. Cover plate		07.310.8553.0	50		07.310.8453.0	50
4. Universal foot		05.583.0053.0	50		05.583.0053.0	50
Foot TS 35		Z5.595.2153.0	50		Z5.595.2153.0	50
Connection technique						
PCB terminals with 5 mm pitch	Type 8180, 8181, 8182, 8190, 8191, 8192, 8113, 8142			Type 8180, 8181, 8182, 8190, 8191, 8192, 8113, 8142		
PCB terminals with 5.08 mm pitch	Type 8213, 8281, 8291, 8292			Type 8213, 8281, 8291, 8292		
PCB terminals with 7.5 mm pitch	Type 8313, 8390, 8391			Type 8313, 8390, 8391		
PCB terminals with 7.62 mm pitch	Type 8413, 8491			Type 8413, 8491		
PCB terminals with 3.5 mm pitch	Type 8543, 8593			Type 8543, 8593		
PCB terminals with 3.81 mm pitch	Type 8813, 8893			Type 8813, 8893		
Accessories						
Flat connector	6.3 mm, straight	05.555.8521.0	50	6.3 mm, straight	05.555.8521.0	50
Flat connector	6.3 mm, angled	05.555.8721.0	50	6.3 mm, angled	05.555.8721.0	50
Flat connector	2 x 2.8 mm, straight	05.555.9121.0	50	2 x 2.8 mm, straight	05.555.9121.0	50
Flat connector	2 x 2.8 mm, angled	05.555.8921.0	50	2 x 2.8 mm, angled	05.555.8921.0	50
Flat connector	2.8 mm, straight	05.555.8621.0	50	2.8 mm, straight	05.555.8621.0	50
Flat connector	2.8 mm, angled	05.555.8821.0	50	2.8 mm, angled	05.555.8821.0	50
Flat connector: Materials	Ms tin plated			Ms tin plated		
Mounting rail: diameter	1.3 – 1.4 mm			1.3 – 1.4 mm		
Mounting rail: spacing	5 mm			5 mm		
Mounting rail 35, DIN rail 7.5 high L = 2 m	35 x 27 x 7,5 EN 60715	98.300.0000.0	1	35 x 27 x 7,5 EN 60715	98.300.0000.0	1
Mounting rail 35, DIN rail 15 high L = 2 m	35 x 24 x 15 EN 60715	98.360.0000.0	1	35 x 24 x 15 EN 60715	98.360.0000.0	1
Mounting rail 32, G-rail L = 2 m	9006 EN 60715 G-32	98.190.0000.0	1	9006 EN 60715 G-32	98.190.0000.0	1
End clamp, Polyamide 8 mm wide TS 35	9708/2 S 35	Z5.522.8553.0	100	9708/2 S 35	Z5.522.8553.0	100
End clamp, Polyamide 10 mm wide U-Foot	WE 1/U	Z5.523.5753.0	100	WE 1/U	Z5.523.5753.0	100
Marker tag holder	9003 C/4	04.242.1050.0	200	9003 C/4	04.242.1050.0	200
Marker tag, unmarked	9003 C	04.241.0651.0	500	9003 C	04.241.0651.0	500
Marker tag, marked	9003 CB	04.841.0651.0	500	9003 CB	04.841.0651.0	500
See pages 582–585 for further labelling systems						

Subject to change without further notice

WEB

Possible areas of application:
- devices and controllers for consumer electronics
- industrial electronics
- control technology
- data technology

Material:

Housing:	PA 6	UL 94-HB
Foot:	PA 66	UL 94-V2
Cover:	PC	UL 94-HB

Dimensions (mm): W x H x D / for PCB

Size 3
93 x 42 x 96 / for PCB 93 x 45

Size 4
70.5 x 74 x 96 / for PCB 93/63 x 45

Description		Part No.	Box Qty		Part No.	Box Qty
Empty housings, complete with U-Foot, without PCB		87.030.0053.0	10		87.040.0053.0	10
Empty housings, complete with Foot TS 35, without PCB		86.030.0053.0	10		86.040.0053.0	10
(The empty housings are supplied unassembled and without PCBs)		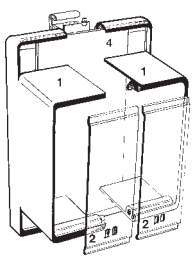			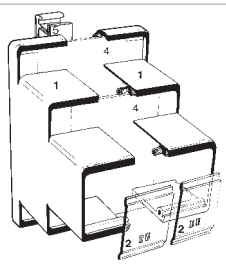	
Housing dimensions		**See page 601**			**See page 601**	
Individual parts						
1. Housing		2 x	01.001.5153.0	50	2 x	01.001.5053.0
2. Cover with marking facility		2 x	04.312.0654.0	50	2 x	04.312.0554.0 50
Cover without marking facility		1 x	04.312.3054.0	10	1 x	04.312.3354.0 50
3. Cover plate						
4. Universal foot			05.583.0053.0	50		05.583.0053.0 50
Foot TS 35			Z5.595.2153.0	50		Z5.595.2153.0 50
Connection technique						
PCB terminals with 5 mm pitch		Type 8180, 8181, 8182, 8190, 8191, 8192, 8113, 8142			Type 8180, 8181, 8182, 8190, 8191,8192, 8113, 8142	
PCB terminals with 5.08 mm pitch		Type 8213, 8281,8291, 8292			Type 8213, 8281,8291, 8292	
PCB terminals with 7.5 mm pitch		Type 8313, 8390, 8391			Type 8313, 8390, 8391	
PCB terminals with 7.62 mm pitch		Type 8413, 8491			Type 8413, 8491	
PCB terminals with 3.5 mm pitch		Type 8543, 8593			Type 8543, 8593	
PCB terminals with 3.81 mm pitch		Type 8813, 8893			Type 8813, 8893	
Accessories						
Flat connector		6.3 mm, straight	05.555.8521.0	50	6.3 mm, straight	05.555.8521.0 50
Flat connector		6.3 mm, angled	05.555.8721.0	50	6.3 mm, angled	05.555.8721.0 50
Flat connector		2 x 2.8 mm, straight	05.555.9121.0	50	2 x 2.8 mm, straight	05.555.9121.0 50
Flat connector		2 x 2.8 mm, angled	05.555.8921.0	50	2 x 2.8 mm, angled	05.555.8921.0 50
Flat connector		2.8 mm, straight	05.555.8621.0	50	2.8 mm, straight	05.555.8621.0 50
Flat connector		2.8 mm, angled	05.555.8821.0	50	2.8 mm, angled	05.555.8821.0 50
Flat connector: Materials		Ms tin plated			Ms tin plated	
Mounting rail: diameter		1.3 -1.4 mm			1.3 -1.4 mm	
Mounting rail: spacing		5 mm			5 mm	
Mounting rail 35, DIN rail 7.5 high	L = 2 m	35 x 27 x 7,5 EN 60715	98.300.0000.0	1	35 x 27 x 7,5 EN 60715	98.300.0000.0 1
Mounting rail 35, DIN rail 15 high	L = 2 m	35 x 24 x 15 EN 60715	98.360.0000.0	1	35 x 24 x 15 EN 60715	98.360.0000.0 1
Mounting rail 32, G-rail	L = 2 m	9006 EN 60715 G-32	98.190.0000.0	1	9006 EN 60715 G-32	98.190.0000.0 1
End clamp, Polyamide	8 mm wide TS 35	9708/2 S 35	Z5.522.8553.0	100	9708/2 S 35	Z5.522.8553.0 100
End clamp, Polyamide	10 mm wide U-Foot	WE 1/U	Z5.523.5753.0	100	WE 1/U	Z5.523.5753.0 100
Marker tag holder		9003 C/4	04.242.1050.0	200	9003 C/4	04.242.1050.0 200
Marker tag, unmarked		9003 C	04.241.0651.0	500	9003 C	04.241.0651.0 500
Marker tag, marked		9003 CB	04.841.0651.0	500	9003 CB	04.841.0651.0 500
See pages 582–585 for further labelling systems						

Electronic empty housings

WEB

Possible areas of application:
- devices and controllers for consumers electronics
- industrial electronics
- control technology
- data technology

Material:

Housing:	PA 6	UL 94-HB
Foot:	PA 66	UL 94-V2
Cover:	PC	UL 94-HB

	Size 6	Size 7
Dimensions (mm): W x H x D / for PCB	70.5 x 42 x 96 / for PCB 93 x 67	70.5 x 74 x 96 / for PCB 93/63 x 67

Description		Part No.	Box Qty		Part No.	Box Qty
Empty housings, complete with U-Foot, without PCB		87.060.0053.0	10		87.070.0053.0	10
(The empty housings are supplied unassembled and without PCBs)		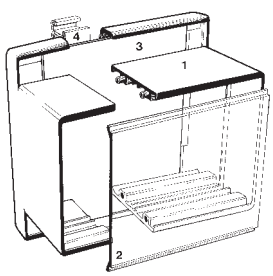			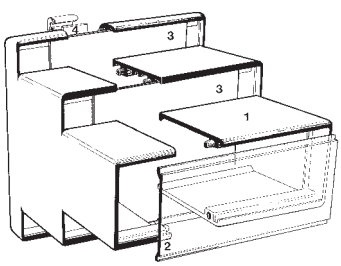	
Housing dimensions		**See page 601**			**See page 601**	
Individual parts						
1. Housing		01.001.5153.0	50		01.001.5353.0	10
Housing		01.001.5453.0	50		01.001.5053.0	
2. Cover		04.312.3154.0	50		04.312.3454.0	50
3. Universal foot		05.583.0153.0	50		05.583.0153.0	50
Connection technique						
PCB terminals with 5 mm pitch		Type 8180, 8181, 8182, 8190, 8191, 8192, 8113, 8142			Type 8180, 8181, 8182, 8190, 8191, 8192, 8113, 8142	
PCB terminals with 5.08 mm pitch		Type 8213, 8281, 8291, 8292			Type 8213, 8281, 8291, 8292	
PCB terminals with .5 mm pitch		Type 8313, 8390, 8391			Type 8313, 8390, 8391	
PCB terminals with 7.62 mm pitch		Type 8413, 8491			Type 8413, 8491	
PCB terminals with 3.5 mm pitch		Type 8543, 8593			Type 8543, 8593	
PCB terminals with 3.81 mm pitch		Type 8813, 8893			Type 8813, 8893	
Technical data						
Materials		Ms tin plated			Ms tin plated	
Mounting rail: diameter		1.3 –1.4 mm			1.3 –1.4 mm	
Mounting rail: spacing		5 mm			5 mm	
Accessories						
Flat connector		6.3 mm, straight	05.555.8521.0	50	6.3 mm, straight	05.555.8521.0	50
Flat connector		6.3 mm, angled	05.555.8721.0	50	6.3 mm, angled	05.555.8721.0	50
Flat connector		2 x 2.8 mm, straight	05.555.9121.0	50	2 x 2.8 mm, straight	05.555.9121.0	50
Flat connector		2 x 2.8 mm, angled	05.555.8921.0	50	2 x 2.8 mm, angled	05.555.8921.0	50
Flat connector		2.8 mm, straight	05.555.8621.0	50	2.8 mm, straight	05.555.8621.0	50
Flat connector		2.8 mm, angled	05.555.8821.0	50	2.8 mm, angled	05.555.8821.0	50
Mounting rail 35, DIN rail 7.5 high	L = 2 m	35 x 27 x 7,5 EN 60715	98.300.0000.0	1	35 x 27 x 7.5 EN 60715	98.300.0000.0	1
Mounting rail 35, DIN rail 15 hoc	L = 2 m	35 x 24 x 15 EN 60715	98.360.0000.0	1	35 x 24 x 15 EN 60715	98.360.0000.0	1
Mounting rail 32, G-rail	L = 2 m	9006 EN 60715 G-32	98.190.0000.0	1	9006 EN 60715 G-32	98.190.0000.0	1
End clamp, Polyamide	8 mm wide TS 35	9708/2 S 35	Z5.522.8553.0	100	9708/2 S 35	Z5.522.8553.0	100
End clamp, Polyamide	10 mm wide U-Foot	WE 1/U	Z5.523.5753.0	100	WE 1/U	Z5.523.5753.0	100
Marker tag holder		9003 C/4	04.242.1050.0	200	9003 C/4	04.242.1050.0	200
Marker tag, unmarked		9003 C	04.241.0651.0	500	9003 C	04.241.0651.0	500
Marker tag, marked		9003 CB	04.841.0651.0	500	9003 CB	04.841.0651.0	500
See pages 582–585 for further labelling systems						

Subject to change without further notice

WEB

Possible areas of application:
- Devices and controllers for consumers electronics
- industrial electronics
- control technology
- data technology

Material:

Housing:	PA 6	UL 94-HB
Foot:	PA 66	UL 94-V2
Cover:	PC	UL 94-HB

Dimensions (mm): W x H x D / for PCB	**Size 8** 93 x 42 x 96 / for PCB 93 x 89,6			**Size 9** 93 x 74 x 96 / for PCB 93/63 x 89,6		
Description		Part No.	Box Qty		Part No.	Box Qty
Empty housings, complete with U-Foot, without PCB		87.080.0053.0	10		87.090.0053.0	10
(The empty housings are supplied unassembled and without PCBs)	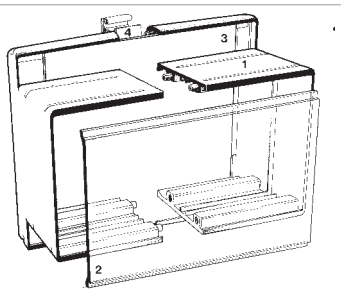			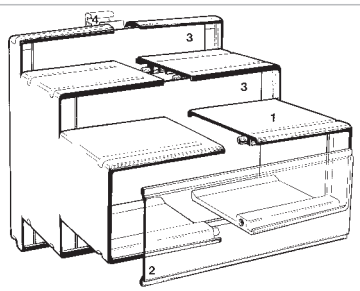		
Housing dimensions	**See page 601**			**See page 601**		
Individual parts						
1. Housing		01.001.5453.0	50		01.001.5353.0	10
Housing		01.001.5453.0	50		01.001.5353.0	10
2. Cover		04.312.3254.0	50		04.312.3554.0	50
3. Universal foot		05.583.0153.0	50		05.583.0153.0	50
Connection technique						
PCB terminals with 5 mm pitch	Type 8180, 8181, 8182, 8190, 8191, 8192, 8113, 8142			Type 8180, 8181, 8182, 8190, 8191, 8192, 8113, 8142		
PCB terminals with 5.08 mm pitch	Type 8213, 8281, 8291, 8292			Type 8213, 8281, 8291, 8292		
PCB terminals with 7.5 mm pitch	Type 8313, 8390, 8391			Type 8313, 8390, 8391		
PCB terminals with 7.62 mm pitch	Type 8413, 8491			Type 8413, 8491		
PCB terminals with 3.5 mm pitch	Type 8543, 8593			Type 8543, 8593		
PCB terminals with 3.81 mm pitch	Type 8813, 8893			Type 8813, 8893		
Technical data						
Materials	Ms tin plated			Ms tin plated		
Mounting rail: diameter	1.3 – 1.4 mm			1.3 – 1.4 mm		
Mounting rail: spacing	5 mm			5 mm		
Accessories						
Flat connector	6.3 mm, straight	05.555.8521.0	50	6.3 mm, straight	05.555.8521.0	50
Flat connector	6.3 mm, angled	05.555.8721.0	50	6.3 mm, angled	05.555.8721.0	50
Flat connector	2 x 2.8 mm, straight	05.555.9121.0	50	2 x 2.8 mm, straight	05.555.9121.0	50
Flat connector	2 x 2.8 mm, angled	05.555.8921.0	50	2 x 2.8 mm, angled	05.555.8921.0	50
Flat connector	2.8 mm, straight	05.555.8621.0	50	2.8 mm, straight	05.555.8621.0	50
Flat connector	2.8 mm, angled	05.555.8821.0	50	2.8 mm, angled	05.555.8821.0	50
Mounting rail 35, DIN rail 7.5 high L = 2 m	35 x 27 x 7.5 EN 60715	98.300.0000.0	1	35 x 27 x 7.5 EN 60715	98.300.0000.0	1
Mounting rail 35, DIN rail 15 high L = 2 m	35 x 24 x 15 EN 60715	98.360.0000.0	1	35 x 24 x 15 EN 60715	98.360.0000.0	1
Mounting rail 32, G rail L = 2 m	9006 EN 60715 G-32	98.190.0000.0	1	9006 EN 60715 G-32	98.190.0000.0	1
End clamp, Polyamide 8 mm wide TS 35	9708/2 S 35	Z5.522.8553.0	100	9708/2 S 35	Z5.522.8553.0	100
End clamp, Polyamide 10 mm wide U-Foot	WE 1/U	Z5.523.5753.0	100	WE 1/U	Z5.523.5753.0	100
Marker tag holder	9003 C/4	04.242.1050.0	200	9003 C/4	04.242.1050.0	200
Marker tag, unmarked	9003 C	04.241.0651.0	500	9003 C	04.241.0651.0	500
Marker tag, marked	9003 CB	04.841.0651.0	500	9003 CB	04.841.0651.0	500
See pages 582–585 for further labelling systems						

Electronic empty housings

WEB 1001

System benefits
- can be assembled to any length
- possible to have complete custom-made design
- can be assembled together quickly due to the plug-in modular principle
- high torsional rigidity due to the firm interconnection of the individual elements
- can be latched onto all DIN EN mounting rail 32/35 using the universal foot

Material:
Housing: PA 6 GU30 UL 94-HB
Foot: PA 66 UL 94-V2

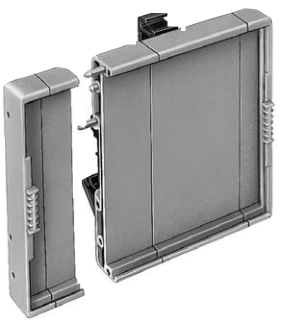

WEB 1001

Dimensions (mm): W x H x D — Variable x 96 x 33.5

Individual parts	Type	Part No.	Box Qty
1. End cover with label holder	Width 12.8 mm	01.001.5593.0	50
1. End cover without label holder	Width 12.8 mm	01.001.5993.0	50
2. Middle section of housing	Width 12.8 mm	01.001.5853.0	50
3. Middle section of housing	Width 22.5 mm	01.001.5653.0	50
4. Middle section of housing	Width 44.8 mm	01.001.5753.0	50
5. Universal foot	Width 23 mm	05.583.0053.0	50
5. Universal foot (overall width from 70.4 mm)	Width 68 mm	05.583.0153.0	50

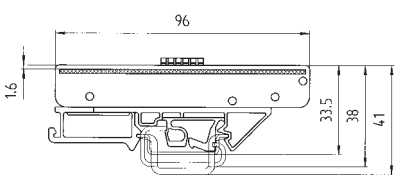

Accessories		Type	Part No.	Box Qty
Mounting rail 35, DIN rail 7.5 mm high	L = 2 m	35 x 27 x 7,5 EN 60715	98.300.0000.0	1
Mounting rail 35, DIN rail 15 mm high	L = 2 m	35 x 24 x 15 EN 60715	98.360.0000.0	1
Mounting rail 32, G-rail	L = 2 m	9006 EN 60715 G-32	98.190.0000.0	1
PCB (not included)		see drawing for dimensions		
End clamp, Polyamide	8 mm wide TS 35	9708/2 S 35	Z5.522.8553.0	100
End clamp, Polyamide	10 mm wide U-Foot	WE 1/U	Z5.523.5753.0	100
Marker tag, unmarked		9003 C	04.242.0850.0	500
Marker tag, marked		9003 CB	04.842.0850.0	500

See pages 582–585 for further labelling systems

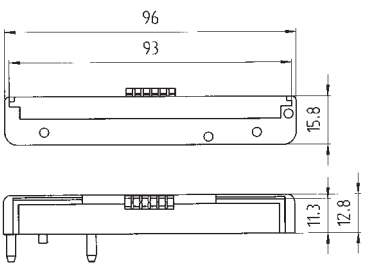

Width 12.8 mm 01.001.5593.0 50

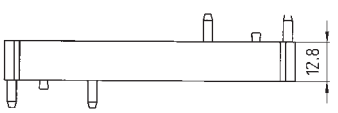

Width 12.8 mm 01.001.5853.0 50

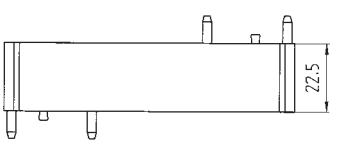

Width 22.5 mm 01.001.5653.0 50

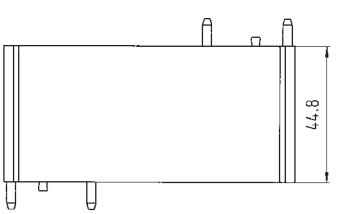

Width 44.8 mm 01.001.5753.0 50

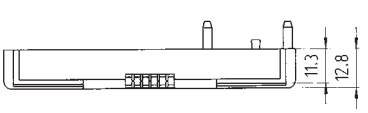

01.001.5593.0 50

Universal foot

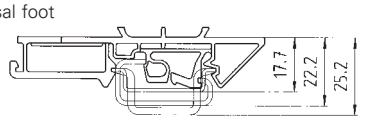

Width 23 mm 05.583.0053.0 50
Width 68 mm 05.583.0153.0 50
(overall width from 70.4 mm)

Subject to change without further notice

Electronic empty housings

WEB 1002

System benefits
- can be assembled to any length
- possible to have complete custom-made design
- can be assembled together quickly due to the plug-in modular principle
- high torsional rigidity due to the firm interconnection of the individual elements
- can be latched onto all DIN EN mounting rail 32/35 using the universal foot

Material:
Housing: PA 6 GU30 UL 94-HB
Foot: PA 66 UL 94-V2

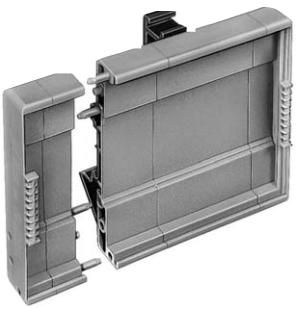

WEB 1002

Dimensions (mm): W x H x D — Variable x 80 x 33.5

Individual parts	Type	Part No.	Box Qty
1. End cover with label holder	Width 12.8 mm	01.001.6493.0	50
2. Middle section of housing	Width 12.8 mm	01.001.6553.0	50
3. Middle section of housing	Width 22.5 mm	01.001.6653.0	50
4. Middle section of housing	Width 44.8 mm	01.001.6753.0	50
5. Universal foot	Width 23 mm	05.584.8853.0	50
5. Universal foot (overall width from 70.4 mm)	Width 68 mm	05.584.8953.0	50

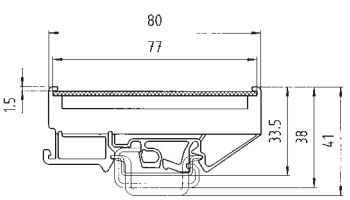

Accessories				
Mounting rail 35, DIN rail 7.5 mm high	L = 2 m	35 x 27 x 7.5 EN 60715	98.300.0000.0	1
Mounting rail 35, DIN rail 15 mm high	L = 2 m	35 x 24 x 15 EN 60715	98.360.0000.0	1
Mounting rail 32, G-rail	L = 2 m	9006 EN 60715 G-32	98.190.0000.0	1
PCB (not included)		see drawing for dimensions		
End clamp, Polyamide	8 mm wide TS 35	9708/2 S 35	Z5.522.8553.0	100
End clamp, Polyamide	10 mm wide U-Foot	WE 1/U	Z5.523.5753.0	100
Marker tag, unmarked		9003 C	04.242.0850.0	500
Marker tag, marked		9003 CB	04.842.0850.0	500

See pages 582–585 for further labelling systems

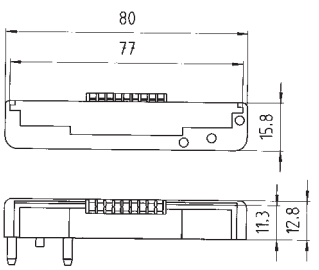

Width 12.8 mm 01.001.6493.0 50

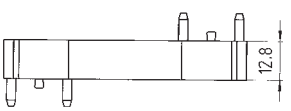

Width 12.8 mm 01.001.6553.0 50

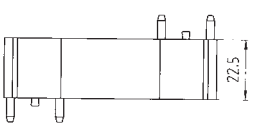

Width 22.5 mm 01.001.6653.0 50

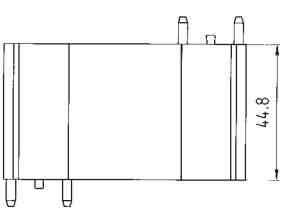

Width 44.8 mm 01.001.6753.0 50

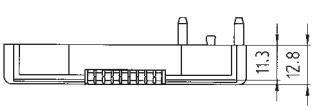

01.001.6493.0 50

Universal foot

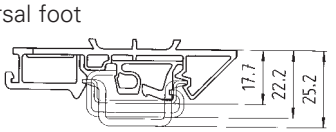

Width 23 mm 05.584.8853.0 50
Width 68 mm 05.584.8953.0 50
(overall width from 70.4 mm)

Subject to change without further notice

WEB 1002

with integrated U-foot

System benefits
- can be assembled to any length
- possible to have complete custom-made design
- can be assembled together quickly due to the plug-in modular principle
- high torsional rigidity due to the firm interconnection of the individual elements
- can be latched onto all DIN EN mounting rail 32/35 using the universal foot

Material:
Housing: PA 6 GU30 UL 94-HB
Foot: PA 66 UL 94-V2

WEB 1002 with integrated U-Foot
Variable x 80 x 33.5

Dimensions (mm): W x H x D

Individual parts	Type	Part No.	Box Qty
1. End cover with integrated U-foot	Width 11 mm	01.001.6293.0	50
2. Middle section with integrated U-foot	Width 10 mm	01.001.6553.0	50
3. End plate	Width 1 mm	07.310.9653.0	50

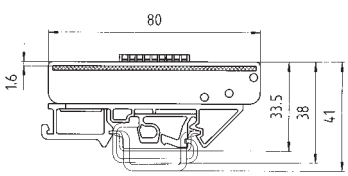

Accessories				
Mounting rail 35, DIN rail 7.5 mm high	L = 2 m	35 x 27 x 7,5 EN 60715	98.300.0000.0	1
Mounting rail 35, DIN rail 15 mm high	L = 2 m	35 x 24 x 15 EN 60715	98.360.0000.0	1
Mounting rail 32, G-rail	L = 2 m	9006 EN 60715 G-32	98.190.0000.0	1
PCB (not included)		see drawing for dimensions		
End clamp, Polyamide	8 mm wide TS 35	9708/2 S 35	Z5.522.8553.0	100
End clamp, Polyamide	10 mm wide U-Foot	WE 1/U	Z5.523.5753.0	100
Marker tag, unmarked		9003 C	04.242.0850.0	500
Marker tag, marked		9003 CB	04.842.0850.0	500

See pages 582–585 for further labelling systems

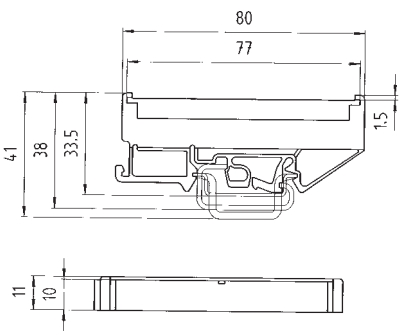

Width 11 mm 01.001.6293.0 50

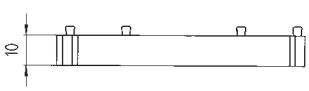

Width 10 mm 01.001.6553.0 50

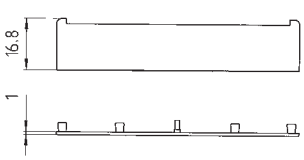

Width 1 mm 07.310.9653.0 50

electronics

Electronic empty housings

WEG

System benefits
- closed housing available in four different sizes
- parallel connection of the modules in various lengths possible via the latchable U-foot
- compact housing made from high quality material
- UL 94-V-0 polyamide 66/6

UL-Data	No. 22–10 AWG/600 V	No. 22–10 AWG/600 V
CSA-Data	No. 20–10 AWG	No. 20–10 AWG
Approvals	UL	UL
Dimensions (mm): W x H x D	20 x 60.6 x 63	16.5 x 60.6 x 90.5

Description		Part No.	Box Qty			
Empty housing, complete with U-Foot, without PCB		57.801.0053.0	10		57.801.5053.0	10
	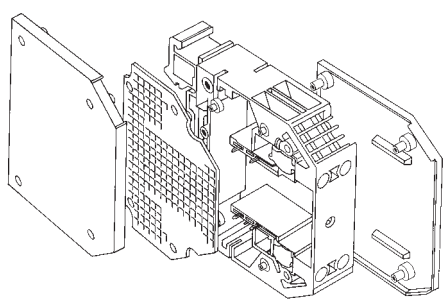			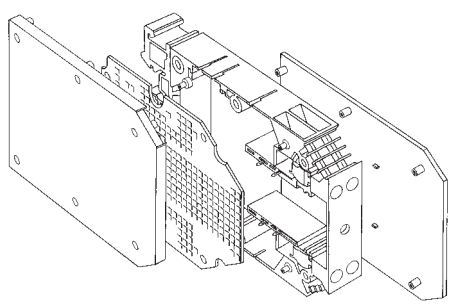		
Housing dimensions, PCB dimensions	**See page 602**			**See page 602**		
Technical data						
Rated cross-section	4 mm²			4 mm²		
Wire range single core	0.14–6 mm² (EN 60 947-7-1 / DIN VDE 0611 T1)			0.14–6 mm² (EN 60 947-7-1 / DIN VDE 0611 T1)		
Wire range finely stranded	0.14–4 mm² (EN 60 947-7-1 / DIN VDE 0611 T1)			0.14–4 mm² (EN 60 947-7-1 / DIN VDE 0611 T1)		
Rated voltage	400 V/4 kV/3			400 V/4 kV/3		
Rated current	max. 10 A			max. 10 A		
Type of protection	IP 20			IP 20		
Insulation strip length	7 mm			7 mm		
Regulations, norms	DIN VDE 0611 Part 1 (11.77)			DIN VDE 0611 Part 1 (11.77)		
	EN 60947-7-1: 1991/DIN VDE 0611 T1/08.92			EN 60947-7-1: 1991/DIN VDE 0611 T1/08.92		
Accessories						
Mounting rail 35, DIN rail 7.5 mm high L = 2 m	35 x 27 x 7,5 EN 60715	98.300.0000.0	1	35 x 27 x 7,5 EN 60715	98.300.0000.0	1
Mounting rail 35, DIN rail 15 mm high L = 2 m	35 x 24 x 15 EN 60715	98.360.0000.0	1	35 x 24 x 15 EN 60715	98.360.0000.0	1
Mounting rail 32, G-rail L = 2 m	9006 EN 60715 G-32	98.190.0000.0	1	9006 EN 60715 G-32	98.190.0000.0	1
PCB (see drawing for dimensions) (hole grid)		Z8.000.0123.1	10			
End clamp, Polyamide 8 mm wide TS 35	9708/2 S 35	Z5.522.8553.0	100	9708/2 S 35	Z5.522.8553.0	100
End clamp, Polyamide 10 mm wide U-Foot	WE 1/U	Z5.523.5753.0	100	WE 1/U	Z5.523.5753.0	100
Marker tag, unmarked	9003 C	04.242.0651.0	500	9003 C	04.241.0651.0	500
Marker tag, marked	9003 CB	04.842.0651.0	500	9003 CB	04.841.0651.0	500
See pages 582–585 for further labelling systems						

Subject to change without further notice

WEG

System benefits
- closed housing available in four different sizes
- parallel connection of the modules in various lengths possible via the latchable U-foot
- Compact housing made from high quality material
- UL 94-V-0 polyamide 66/6

UL-Data	No. 22-10 AWG/600 V	No. 22–10 AWG/600 V
CSA-Data	No. 20-10 AWG	No. 20–10 AWG
Approvals	UL	UL
Dimensions (mm): W x H x D	22.5 x 60.6 x 90.5	28.5 x 60.6 x 90.5

Description	Part No.	Box Qty	Part No.	Box Qty
Empty housings, complete with U-Foot, without PCB	57.801.5153.0	10	57.801.5253.0	10
	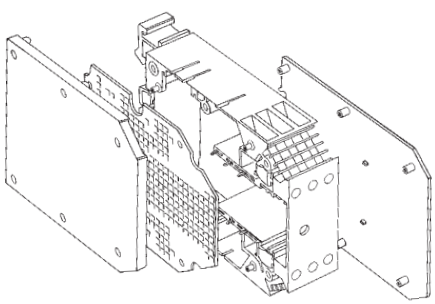		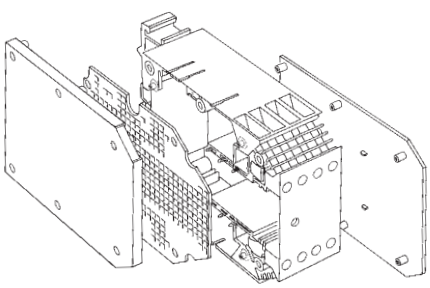	
Housing dimensions, PCB dimensions	**See page 602**		**See page 602**	
Technical data				
Rated cross-section	4 mm²		4 mm²	
Wire range single core	0.14–6 mm² (EN 60 947-7-1 / DIN VDE 0611 T1)		0.14–6 mm² (EN 60 947-7-1 / DIN VDE 0611 T1)	
Wire range finely stranded	0.14–4 mm² (EN 60 947-7-1 / DIN VDE 0611 T1)		0.14–4 mm² (EN 60 947-7-1 / DIN VDE 0611 T1)	
Rated voltage	400 V/4 kV/3		400 V/4 kV/3	
Rated current	max. 10 A		max. 10 A	
Type of protection	IP 20		IP 20	
Insulation strip length	7 mm		7 mm	
Regulations, norms	DIN VDE 0611 Part 1 (11.77)		DIN VDE 0611 Part 1 (11.77)	
	EN 60947-7-1: 1991/DIN VDE 0611 T1/08.92		EN 60947-7-1: 1991/DIN VDE 0611 T1/08.92	
Accessories				
Mounting rail 35, DIN rail 7.5 mm high L = 2 m	35 x 27 x 7,5 EN 60715	98.300.0000.0 1	35 x 27 x 7,5 EN 60715	98.300.0000.0 1
Mounting rail 35, DIN rail 15 mm high L = 2 m	35 x 24 x 15 EN 60715	98.360.0000.0 1	35 x 24 x 15 EN 60715	98.360.0000.0 1
Mounting rail 32, G-rail L = 2 m	9006 EN 60715 G-32	98.190.0000.0 1	9006 EN 60715 G-32	98.190.0000.0 1
End clamp, Polyamide 8 mm wide TS 35	9708/2 S 35	Z5.522.8553.0 100	9708/2 S 35	Z5.522.8553.0 100
End clamp, Polyamide 10 mm wide U-Foot	WE 1/U	Z5.523.5753.0 100	WE 1/U	Z5.523.5753.0 100
Marker tag, unmarked	9003 C	04.241.0651.0 500	9003 C	04.241.0651.0 500
Marker tag, marked	9003 CB	04.841.0651.0 500	9003 CB	04.841.0651.0 500
See pages 582–585 for further labelling systems				

electronics

Electronic empty housings

wieBox

System benefits
- housing design in twin shell technology
- housing with or without ventilation slots
- installation of the 2 pole supply terminal in the 19mm housing
- 8 poles possible
- solid or removable front panels

UL-Data	No. 22-12 AWG 300 V UG: B, D 20 A/30 A	No. 22-12 AWG 300 V UG: B, D 20 A/30 A
CSA-Data	No. 22-12 AWG 300 V Gr. B 25 A	No. 22-12 AWG 300 V Gr. B 25 A
Approvals	UL, CSA	UL, CSA
Overall width (mm): W x H x D	width 19 x 75 x 110.8	width 22.5 x 75 x 110,8

Individual parts	Type	Part No.	Box Qty	Type	Part No.	Box Qty
Housing base, general with contour, without PCB						
1. **Housing base, with mounting foot, with ventilation slots**	wieBox CN 19 GKL	Z1.296.3453.0	25	wieBox CN 22 GKL	Z1.296.3853.0	25
2. **Housing base, with mounting foot, without ventilation slots**	wieBox CN 19 GK	Z1.296.3553.0	25	wieBox CN 22 GK	Z1.296.3953.0	25
3. **Lid, without integral front panel, with contour**	wieBox CN DK	07.416.5153.0	25	wieBox CN DK	07.416.5153.0	25
4. **Lid, without integral front panel, without contour**	wieBox CN DU	07.416.5253.0	25	wieBox CN DU	07.416.5253.0	25
5. **Lid, with integral front panel, without contour**	wieBox CN 19 DK	07.416.5353.0	25	wieBox CN 22 DK	07.416.5653.0	25
6. **Lid, without integral front panel, without contour**	wieBox CN 19 DU	07.416.5453.0	25	wieBox CN 22 DU	07.416.5753.0	25
7. **Front panel, transparent**	wieBox CN 19 FKG	07.416.4856.0	50	wieBox CN 22 FKG	07.416.4956.0	50
8. **Front panel, gray**	wieBox CN 19 FK	07.416.4853.0	50	wieBox CN 22 FK	07.416.4953.0	50
	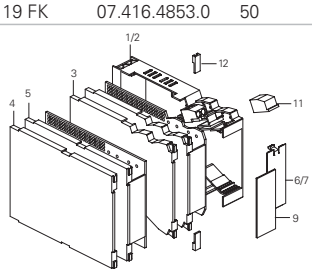			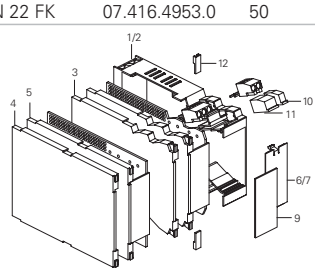		
Housing dimensions, PCB dimensions	**See page 603**			**See page 603**		
Technical data						
Rated cross-section	2.5 mm²			2.5 mm²		
Wire range single core/finely stranded	0.14 – 4 mm²/0.14 – 2.5 mm²			0.14 – 4 mm² / 0.14 – 2.5 mm²		
Insulation strip length	6.5 mm			6.5 mm		
Rated voltage: 5mm pitch	250 V/4 kV/3 – overvoltage category III			250 V/4 kV/3 – overvoltage category III		
(in accordance with VDE 0110/01.89)	690 V/4 kV/2 – overvoltage category II (max. 600 V for			690 V/4 kV/2 – overvoltage category II (max. 600 V for		
	for non-earthed systems or expected ≤4 kV)			systems or expected ≤ 4 kV)		
	1000 V/4 kV/1 – overvoltage category I			1000 V/4 kV/1 – overvoltage category I		
Rated current	16 A			16 A		
Regulations, norms	DIN EN 50178 (VDE 0160), DIN EN 699-1 (VDE 0609 T.1)			DIN EN 50178 (VDE 0160), DIN EN 699-1 (VDE 0609 T.1)		
Housing material: Complete housing	PA 66/6 gray, similar to RAL 7032			PA 66/6 gray, similar to RAL 7032		
Front panel, transparent	PC 940 A			PC 940 A		
Mounting foot	PA 66/6 black			PA 66/6 black		
Flammability	UL94-V0			UL94-V0		
Type of protection	IP 40			IP 40		
Material of PCB terminal: Terminal screw	Galvanised steel			Galvanised steel		
Insulation component	PA 66/6 gray, similar to RAL 7032, UL94-V0			PA 66/6 gray, similar to RAL 7032, UL94-V0		
Clamping parts	Brass with nickel plating			Brass with nickel plating		
Contact bridge with soldering parts	Tin plated copper			Tin plated copper		
Soldering pin/bore hole	0.9 x 0.9 mm / Ø 1.3 mm			0.9 x 0.9 mm / Ø 1.3 mm		
Accessories						
9. Snap-in plate, gray	wieBox CN 19 EP	07.416.4553.0	50	wieBox CN 22 EP	07.416.4653.0	50
10. Blanking plate, 1 pole	wieBox CN BL 1	05.561.9553.0	100	wieBox CN BL 1	05.561.9553.0	100
11. Blanking plate, 2 pole	wieBox CN BL 2	05.561.9653.0	100	wieBox CN BL 2	05.561.9653.0	100
12. Marker tag	wieBox CN BZ	04.244.1853.0	100	wieBox CN BZ	04.244.1853.0	100
PCB terminal, right	8191/2- pole WVR OB	25.161.2553.0	100	8191/3- pole WVR OB	25.161.2653.0	100
PCB terminal, left	8191/2- pole WVL OB	25.161.2853.0	100	8191/3- pole WVL OB	25.161.2953.0	100
Mounting rail 35, DIN rail 7,5 mm high L = 2 m	35 x 27 x 7.5 EN 60715	98.300.0000.0	1	35 x 27 x 7.5 EN 60715	98.300.0000.0	1
Mounting rail 35, DIN rail 15 mm high L = 2 m	9708/2 S 35	Z5.522.8553.0	100	9708/2 S 35	Z5.522.8553.0	100
End clamp, Polyamide, for TS 35 8 mm wide	WE 1/U	Z5.523.5753.0	100	WE 1/U	Z5.523.5753.0	100
End clamp, Polyamide, for U-Foot 10 mm wide						
See pages 582-583 for further labelling systems						

Subject to change without further notice

wieBox

System benefits
- housing design in twin shell technology
- housing with or without ventilation slots
- installation of the 2 pole supply terminal in the 19mm housing
- 8 poles possible
- with front plates for insertion or latching into position

Approvals: No. 22-12 AWG 300 V UG: B, D 20 A/30 A
No. 22-12 AWG 300 V Gr. B 25 A
UL, CSA
Overall width (mm) : B x H x T width 26 x 75 x 110.8

Description	Type	Part No.	Box Qty
Housing base, general with contour, without PCB			
1. **Housing base, with mounting foot, with ventilation slots**	wieBox CN 26 GKL	Z1.296.4253.0	25
2. **Housing base, with mounting foot, without ventilation slots**	wieBox CN 26 GK	Z1.296.4353.0	25
3. **Lid, without integral front panel, with contour**	wieBox CN DK	07.416.5153.0	25
4. **Lid, without integral front panel, without contour**	wieBox CN DU	07.416.5253.0	25
5. **Lid, with integral front panel, without contour**	wieBox CN 26 DK	07.416.5853.0	25
6. **Lid, without integral front panel, without contour**	wieBox CN 26 DU	07.416.5953.0	25
7. **Front panel, transparent**	wieBox CN 26 FKG	07.416.5056.0	50
8. **Front panel, gray**	wieBox CN 26 FK	07.416.5053.0	50
	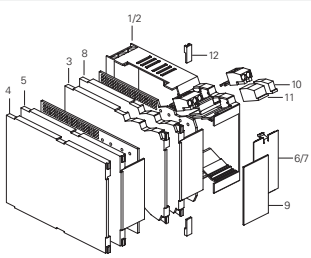		
Housing dimensions, PCB dimensions	**See page 589**		
Technical data			
Rated cross-section	2,5 mm²		
Wire range single core/finely stranded	0,14 – 4 mm²/0,14 – 2,5 mm²		
Insulation strip length	6,5 mm		
Rated voltage: 5mm pitch	250 V/4 kV/3 – overvoltage category III		
(in accordance with VDE 0110/01.89)	690 V/4 kV/2 – overvoltage category II (max. 600V for		
	for non-earthed systems or expected ≤ 4 kV)		
	1000 V/4 kV/1 – overvoltage category I		
Rated current	16 A		
Regulations, norms	DIN EN 50178 (VDE 0160), DIN EN 699-1 (VDE 0609 T.1)		
Housing material: Complete housing	PA 6.6 gray, similar to RAL 7032		
Front panel, transparent	PC 940 A		
Mounting foot	PA 6.6 black		
Flammability	UL94-V0		
Type of protection	IP 40		
Material of PCB terminal: Terminal screw	Galvanised steel		
Insulation component	PA 6.6 gray, similar to RAL 7032, UL94-V0		
Clamping parts	Brass with nickel plating		
Contact bridge with soldering parts	Tin plated copper		
Soldering pin/bore hole	0,9 x 0,9 mm/Ø 1,3 mm		
Accessories	Type	Part No.	Box Qty
9. Snap-in plate, gray	wieBox CN 26 EP	07.416.4753.0	50
10. Blanking plate, 1 pole	wieBox CN BL 1	05.561.9553.0	100
11. Blanking plate, 2 pole	wieBox CN BL 2	05.561.9653.0	100
12. Marker tag	wieBox CN BZ	04.244.1853.0	100
PCB terminal, right	8191/3- pole WVR OB	25.161.2653.0	100
PCB terminal, left	8191/3- pole WVL OB	25.161.2953.0	100
Mounting rail 35, DIN rail 7,5 mm high L = 2m	35 x 27 x 7,5 EN 60715	98.300.0000.0	1
Mounting rail 35, DIN rail 15 mm high L = 2m	35 x 24 x 15 EN 60715	98.360.0000.0	1
End clamp, Polyamide, for TS 35 8 mm wide	9708/2 S 35	Z5.522.8553.0	100
End clamp, Polyamide, for U-Foot 10 mm wide	WE 1/U	Z5.523.5753.0	100
See pages 582–585 for further labelling systems			

Electronic empty housings
Marking material
Labelling System

Terminal markings, snap-in
Housing markings, snap-in
Marker tags with multiple digits
Individual marker, marker strips, marker branch
Individual labelling possible (numbers, symbols)

Description	Type	Part No.	Box Qty	Type	Part No.	Box Qty
Individual marker, without inscription	3 digit, 9705 A	04.242.0850.0	500	8 digit, 9705 AL	04.242.1553.0	500
Individual marker, with inscription	3 digit, 9705 AB	04.842.0850.0	500	8 digit, 9705 ALB	04.842.1553.0	500
(specify marking required in addition to part number)						
Marker strips with 5mm pitch:						
Marker strips, unmarked	9705 A/5/10	04.242.5053.0	25			
Marker strips, unmarked, with enlarged text area	9705 AL/5/10	04.242.5153.0	25			
Marker strips, marked (specify marker required in addition to Part no.)	9705 A/5/10 B	04.842.5053.0	25			
Marker strips, marked (marking for strips: 1...9)	9705 A/5/9 B	04.842.4953.0	25			
Note: Pack unit = 25 strips = 250 tags						
Marker strips with 10 mm pitch:						
Marker strips, marked (as above, but only every other tag is printed)	9705 A/5/10/5 B	04.842.5553.0	25			
Note: Pack unit = 25 strips = 250 tags						
Marker tag holder for WEB-Empty housings		04.242.1050.0	200			
Technical data						
Materials	Polyamide 66/6					
Colour	Black numbers on white background					

Subject to change without further notice

Electronic empty housings
Marking branch with 10 marker tags

Labelling System

Snap-in terminal and housing markings
Marker tags with multiple digits
Individual marker, marker strips, marker branch
Individual labelling possible (numbers, symbols)

Materials:
Polyamide 66/6 white, black printing

Unmarked		Type	Part No.	Box Qty
		9704 A	04.241.1150.0	25
with row of same numbers	**marked, per branch**			
	1 1 1 1 1 1 1 1 1 1	9704 A/1 B	04.841.1150.0	25
	2 2 2 2 2 2 2 2 2 2	9704 A/2 B	04.841.1250.0	25
	3 3 3 3 3 3 3 3 3 3	9704 A/3 B	04.841.1350.0	25
	4 4 4 4 4 4 4 4 4 4	9704 A/4 B	04.841.1450.0	25
	5 5 5 5 5 5 5 5 5 5	9704 A/5 B	04.841.1550.0	25
	6 6 6 6 6 6 6 6 6 6	9704 A/6 B	04.841.1650.0	25
	7 7 7 7 7 7 7 7 7 7	9704 A/7 B	04.841.1750.0	25
	8 8 8 8 8 8 8 8 8 8	9704 A/8 B	04.841.1850.0	25
	9 9 9 9 9 9 9 9 9 9	9704 A/9 B	04.841.1950.0	25
	0 0 0 0 0 0 0 0 0 0	9704 A/0 B	04.841.2050.0	25
1 set of same numbers = 10 x 25 branches = 2500 numbers				
with numbers in sequence	**marked, per branch**			
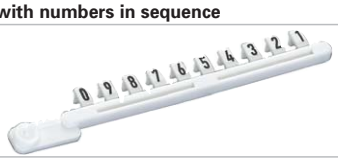	1 2 3 4 5 6 7 8 9 0	9704 A/1-0 B	04.841.2150.0	25
with row of same letters in upper case	**marked, per branch**			
	A A A A A A A A A A	9704 A/AG B	04.841.2250.0	25
	B B B B B B B B B B	9704 A/BG B	04.841.2350.0	25
	C C C C C C C C C C	9704 A/CG B	04.841.2450.0	25
	D D D D D D D D D D	9704 A/DG B	04.841.2550.0	25
	E E E E E E E E E E	9704 A/EG B	04.841.2650.0	25
	F F F F F F F F F F	9704 A/FG B	04.841.2750.0	25
	G G G G G G G G G G	9704 A/GG B	04.841.2850.0	25
	H H H H H H H H H H	9704 A/HG B	04.841.2950.0	25
	I I I I I I I I I I	9704 A/IG B	04.841.3050.0	25
	J J J J J J J J J J	9704 A/JG B	04.841.3150.0	25
	K K K K K K K K K K	9704 A/KG B	04.841.3250.0	25
	L L L L L L L L L L	9704 A/LG B	04.841.3350.0	25
	M M M M M M M M M M	9704 A/MG B	04.841.3450.0	25
	N N N N N N N N N N	9704 A/NG B	04.841.3550.0	25
	O O O O O O O O O O	9704 A/OG B	04.841.3650.0	25
	P P P P P P P P P P	9704 A/PG B	04.841.3750.0	25
	Q Q Q Q Q Q Q Q Q Q	9704 A/QG B	04.841.3850.0	25
	R R R R R R R R R R	9704 A/RG B	04.841.3950.0	25
	S S S S S S S S S S	9704 A/SG B	04.841.4050.0	25
	T T T T T T T T T T	9704 A/TG B	04.841.4150.0	25
	U U U U U U U U U U	9704 A/UG B	04.841.4250.0	25
	V V V V V V V V V V	9704 A/VG B	04.841.4350.0	25
	W W W W W W W W W W	9704 A/WG B	04.841.4450.0	25
	X X X X X X X X X X	9704 A/XG B	04.841.4550.0	25
	Y Y Y Y Y Y Y Y Y Y	9704 A/YG B	04.841.4650.0	25
1 set of upper case letters = 26 x 25 branches = 6500 letters	Z Z Z Z Z Z Z Z Z	9704 A/ZG B	04.841.4750.0	2

Subject to change without further notice

Labelling System

Snap-in terminal and housing markings
Marker tags with multiple digits
Individual marker, marker strips, marker branch
Individual labelling possible (numbers, symbols)

		Type	Part No.	Box Qty
with row of same symbols	**marked, per branch**			
	+ + + + + + + + + +	9704 A/+B	04.841.7450.0	25
	– – – – – – – – – –	9704 A/-B	04.841.7550.0	25
	/ / / / / / / / / /	9704 A//B	04.841.7650.0	25
	. . . .	9704 A/.B	04.841.750.0	25
1 set of same symbols = 10 x 25 branches = 2500 characters				
with row of same letters in lower case	**marked, per branch**			
	a a a a a a a a a a	9704 A/AK B	04.841.4850.0	25
	b b b b b b b b b b	9704 A/BK B	04.841.4950.0	25
	c c c c c c c c c c	9704 A/CK B	04.841.5050.0	25
	d d d d d d d d d d	9704 A/DK B	04.841.5150.0	25
	e e e e e e e e e e	9704 A/EK B	04.841.5250.0	25
	f f f f f f f f f f	9704 A/FK B	04.841.5350.0	25
	g g g g g g g g g g	9704 A/GK B	04.841.5450.0	25
	h h h h h h h h h h	9704 A/HK B	04.841.5550.0	25
	i i i i i i i i i i	9704 A/IK B	04.841.5650.0	25
	j j j j j j j j j j	9704 A/JK B	04.841.6750.0	25
	k k k k k k k k k k	9704 A/KK B	04.841.6850.0	25
	l l l l l l l l l l	9704 A/LK B	04.841.6950.0	25
	m m m m m m m m m m	9704 A/MK B	04.841.6050.0	25
	n n n n n n n n n n	9704 A/NK B	04.841.6150.0	25
	o o o o o o o o o o	9704 A/OK B	04.841.6250.0	25
	p p p p p p p p p p	9704 A/PK B	04.841.6350.0	25
	q q q q q q q q q q	9704 A/QK B	04.841.6450.0	25
	r r r r r r r r r r	9704 A/RK B	04.841.6550.0	25
	s s s s s s s s s s	9704 A/SK B	04.841.6650.0	25
	t t t t t t t t t t	9704 A/TK B	04.841.6750.0	25
	u u u u u u u u u u	9704 A/UK B	04.841.6850.0	25
	v v v v v v v v v v	9704 A/VK B	04.841.6950.0	25
	w w w w w w w w w w	9704 A/WK B	04.841.7050.0	25
	x x x x x x x x x x	9704 A/XK B	04.841.7150.0	25
	y y y y y y y y y y	9704 A/YK B	04.841.7250.0	25
1 set of lower case letters = 26 x 25 branches = 6500 letters	z z z z z z z z z z	9704 A/ZK B	04.841.7350.0	25

electronics

Electronic empty housings

dipos

Plan view

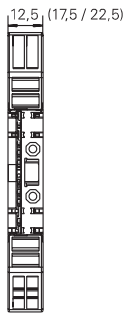

Housing

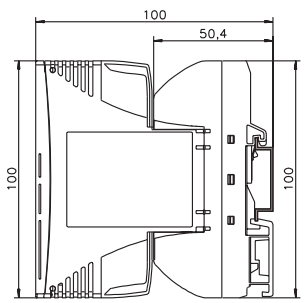

Module board

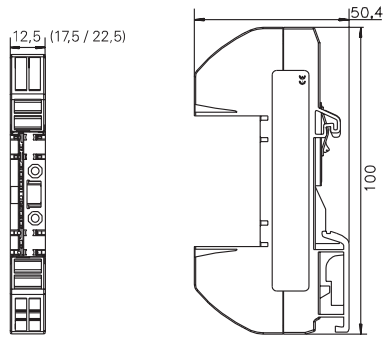

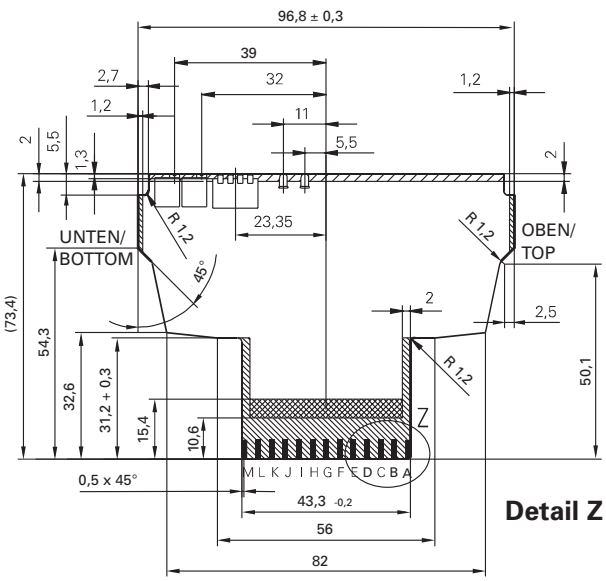

Detail Z

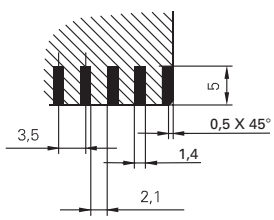

Version (mm width)	12.5	17.5	22.5
Component height Endurance	7.15 2.35	10.35 4.15	15.35 4.15
Max.component height Max.endurance	6.25 1.4	8.7 2.7	13.7 2.7
Max.component height	1.05	0.95	5.95
Blocking zones			

Note: Contact is made on both sides of the terminal faces. Components that generate heat should always be placed in the vicinity of the ventilation slots (upper section of the PCB)

PCB: FR4

Thickness: 1.0 mm

Copper support: ≥ 35 µm (I ≤ 3 A)

≥ 70 µm (I > 3 A)

Subject to change without further notice

WEB

Dimensions for WEB empty housing for sizes 1, 3, 6 and 8 with foot TS 35

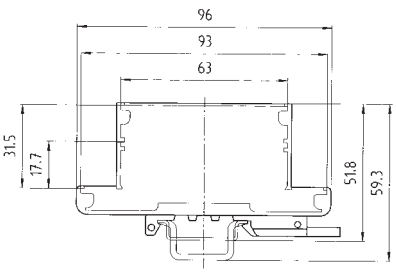

Dimensions for WEB empty housing for sizes 1, 3, 6 and 8 with universal foot

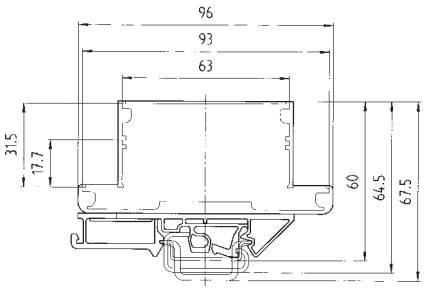

Dimensions of universal foot

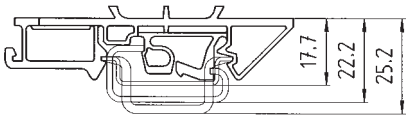

Dimensions for WEB empty housing for sizes 2, 4, 7 and 9 with foot TS 35

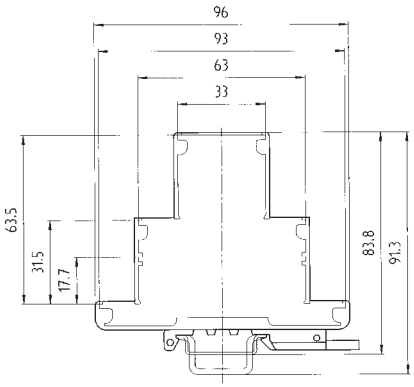

Dimensions for WEB empty housing for sizes 2, 4, 7 and 9 with universal foot

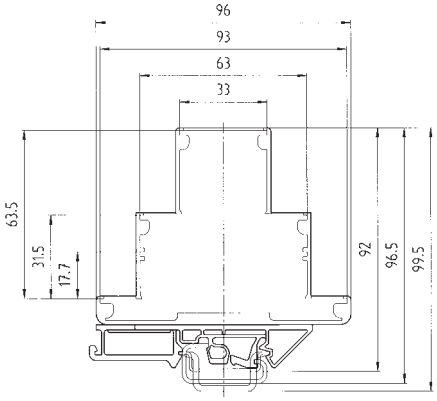

electronics

Electronic empty housings

Dimensions of *WEG*
overall width: 20 mm

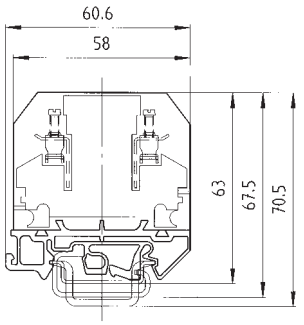

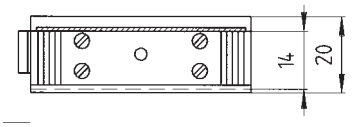

Dimensions of *WEG*
overall width: 16.5 mm
overall width: 22.5 mm
overall width: 28.5 mm

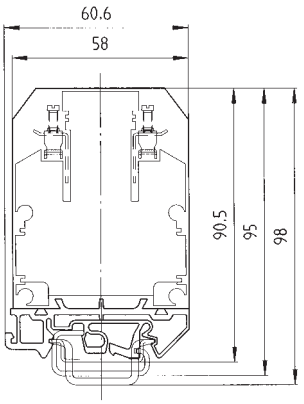

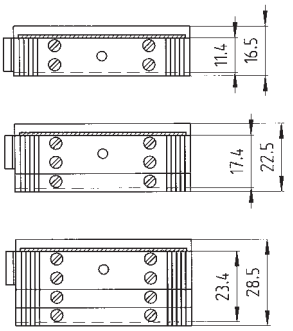

Dimensions of *WEG*
PCB sizes

Overall depth: 63 mm

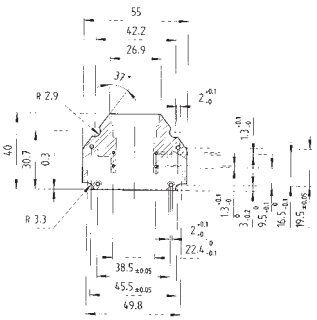

Overall depth: 90.5 mm

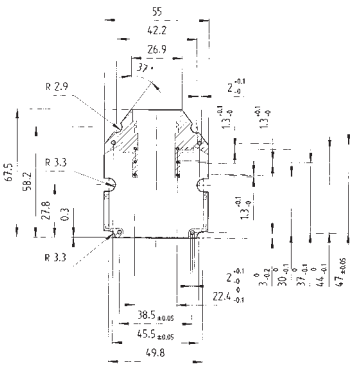

Subject to change without further notice

wieBox

Dimension of *wieBox* housing

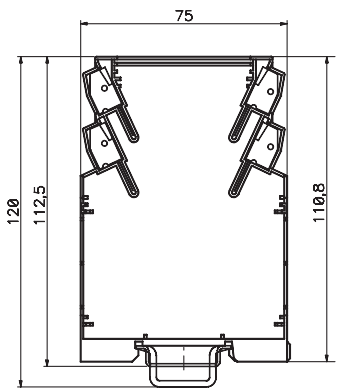

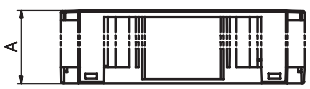

Drawing dimensions

	Dim A	Dim B	Dim C	Dim D
CN 19	19	17	18	18
CN 22	22.5	20.5	21.5	21.5
CN 26	26	24	25	25

(3/4) Lid

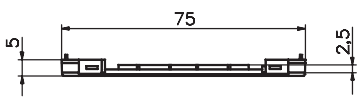

(5/8) Lid

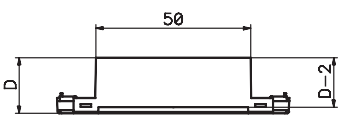

(6/7) Front flap

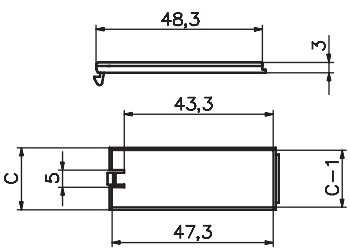

(9) Snap-in plate

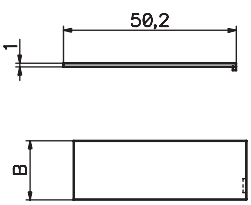

Dimensions of *wieBOX* PCB size

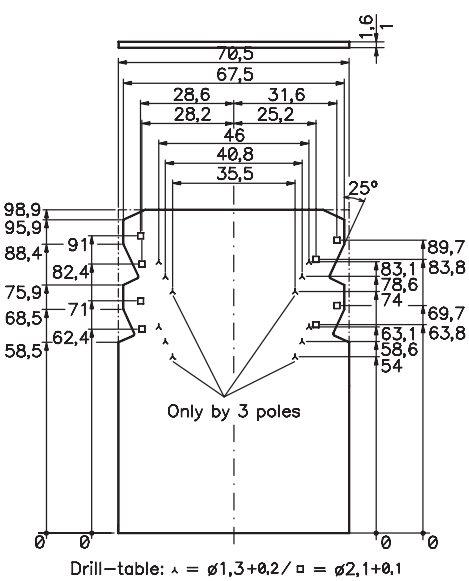

electronics

gesis

Pluggable Electrical Installation System

Electrical installation today: plug in and go

gesis® EIB

GST18

The components of the product line GST 18 are certified according to DIN VDE 0628 and are suited for installation of lighting systems, switches and outlets. They are available in 3 pole, 4 pole, 5 pole and 6 pole configurations and are rated up to 250V or 250/400V, 16A.

BST / EST

You can choose among three product series for the transmission of 2 pole EIB signals. Depending upon your application, you can select either the BST bus connector or the compact connector of the EST line. Wherever you require both power and signal at the same time, these twin connectors have proven extremely practical. All products of this line are marked with a green EIB coding.

A special variation – mechanically not compatible of course – allows for the transmission of bus, control or loud-speaker signals.

Flat cable systems

The flat cable technology can, without a doubt, be called a revolution in the field of electrical installation. The system is based upon a flat cable which combines five insulated wires for electrical network applications and, in parallel, a 2 pole screened signal line – all in one cable. For applications requiring only one version, we also provide the flat cables separately. Connectivity is achieved by means of an insulation piercing connection technique which is possible at any point on the main line. Without having to interrupt the main line, you can add a required branch line by means of plug-in connectors.

Components in 2 pole, 3 pole, 4 pole, 5 pole and 6 pole configuration

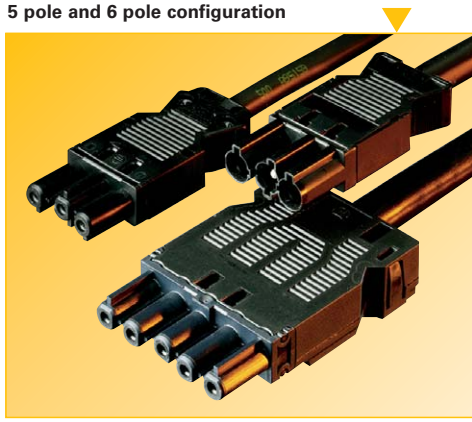

Compact connector for power and signals

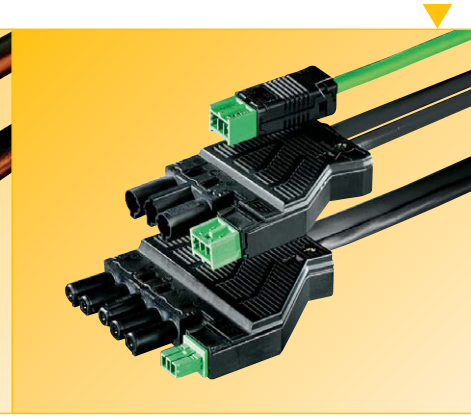

Connection to the flexible cable

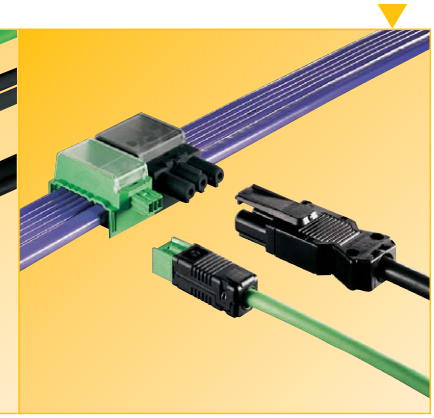

gesis

Low voltage systems

The ***gesis*** system also allows for low voltage systems as well. Using pluggable electrical transformers, you can change directly to the two low voltage lines ST16 or ST17.

EIB systems

Distributed EIB switching devices can be easily integrated into the installation system as required due to its pluggable design. These EIB switching devices are available in two basic versions: EIB-V, which is characterized by its flat and compact design. And EIB-M, a highly flexible solution which is comprised of individual modules.

Stacking coordinates

The stacking coordinates provide an individual solution for each application. The coordinates are made of zinc-plated sheet steel and are equipped with TS 35 mounting rails. They accept both terminal blocks and modular devices in any configuration. The ***gesis*** connector system functions as an interface over the entire network leading to the end devices.

Pluggable low voltage systems

Distributed EIB switching devices can be integrated

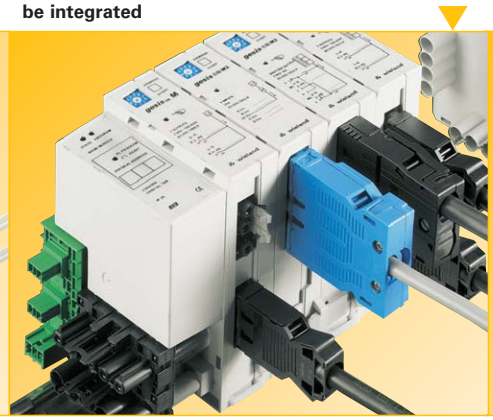

Stacking coordinates

Please contact Wieland Electric Inc. for your *gesis* systems catalog.

Schedule for connectable

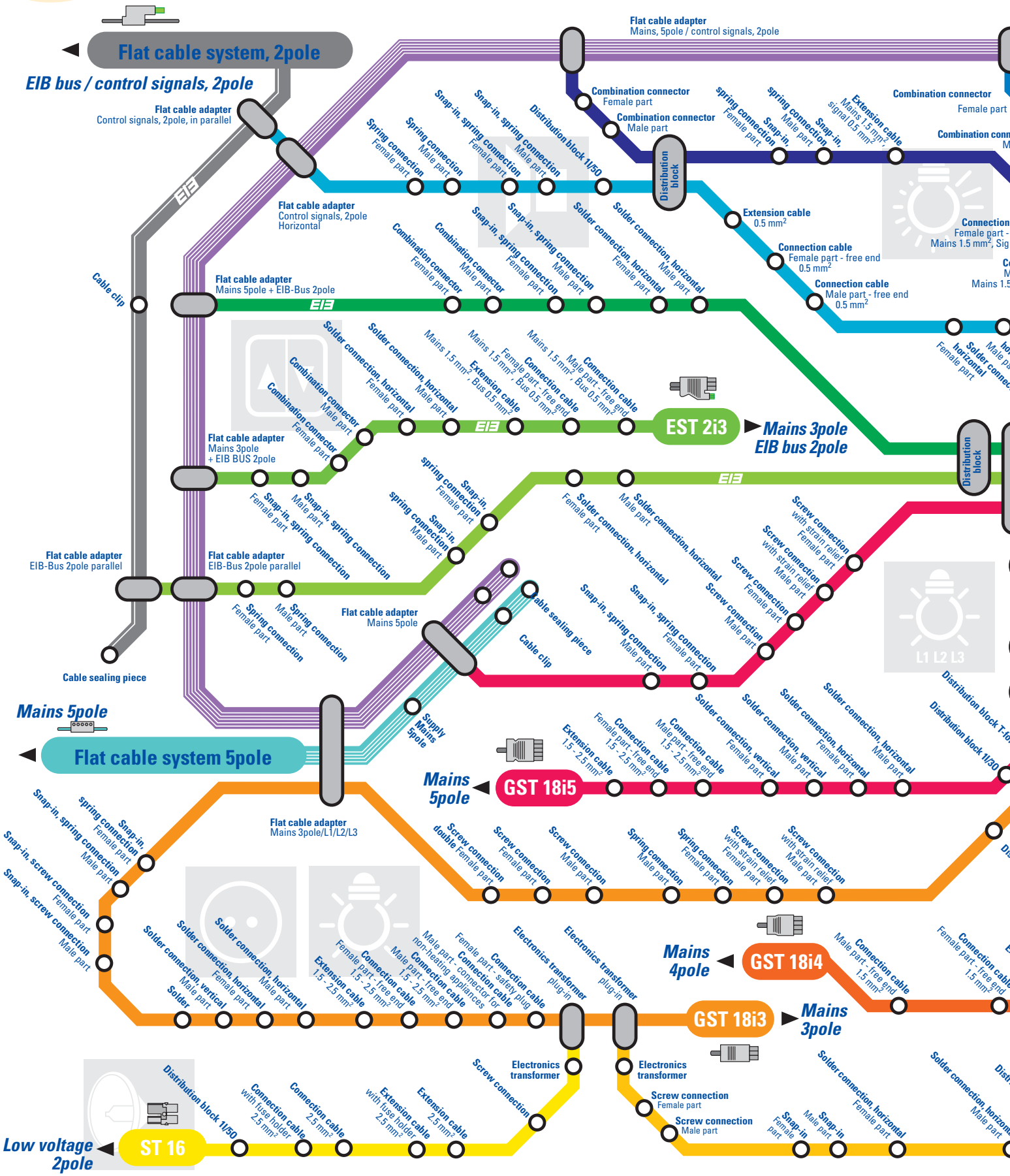

Components

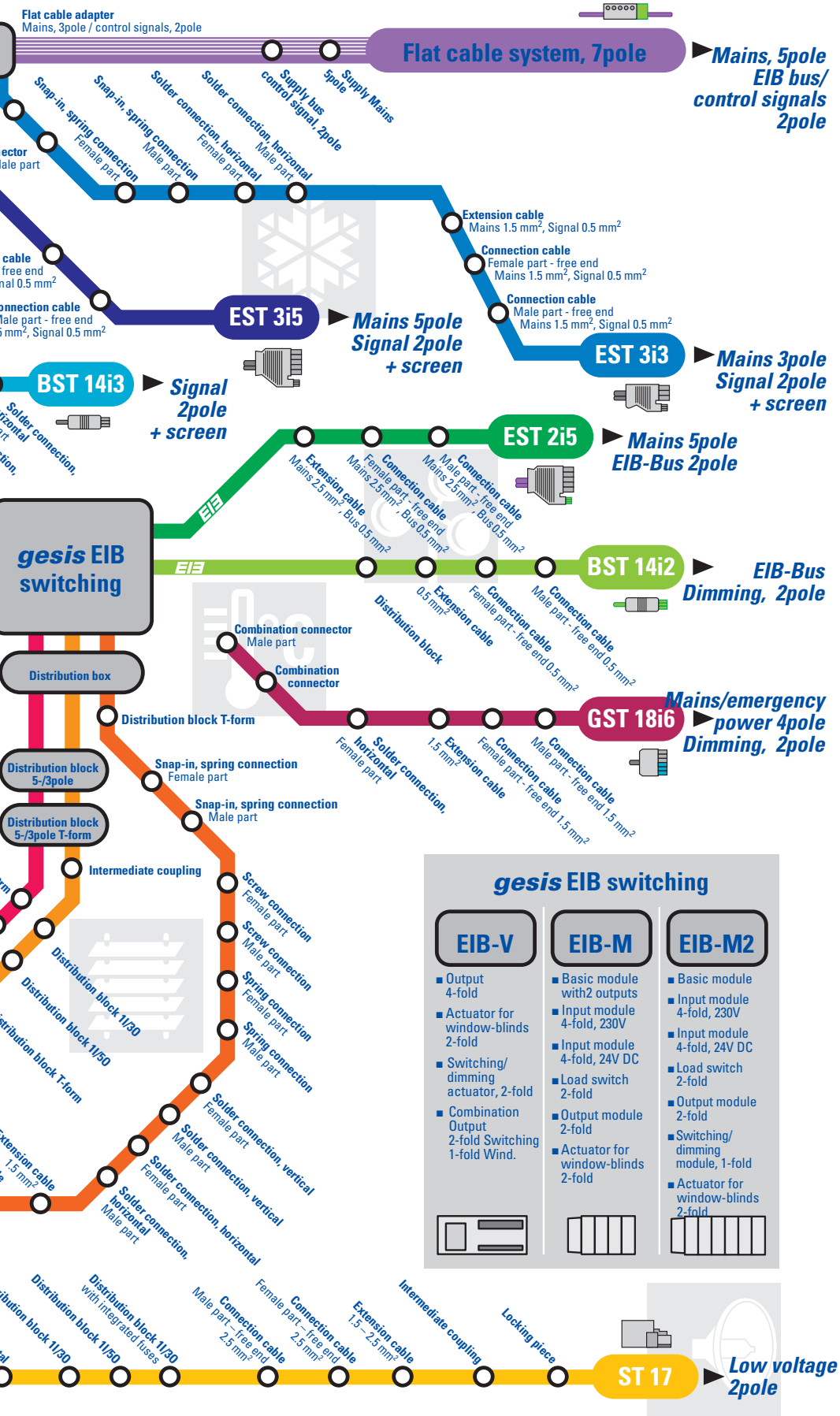

Contents

GST 18i3 *Mains, 3pole*

GST 18i4 *Mains, 4pole*

GST 18i5 *Mains, 5pole*

GST 18i6 *Mains/emergency power supply 4pole Dimming, 2pole*

BST 14i2 *EIB bus Dimming, 2pole*

EST 2i3 *Mains, 3pole EIB bus, 2pole*

EST 2i5 *Mains, 5pole EIB bus, 2pole*

BST 14i3 *Signal, 2pole + screen*

EST 3i3 *Mains, 3pole Signal, 2pole + screen*

EST 3i5 *Mains, 5pole Signal, 2pole + screen*

Flat cable system, 5pole *Mains, 5pole*

Flat cable system, 2pole *EIB bus/control signals, 2pole*

Flat cable system, 7pole *Mains, 5pole EIB bus/control signals, 2pole*

ST 16 *Low voltage, 2pole*

ST 17 *Low voltage, 2pole*

gesis EIB switching devices *EIB-V EIB-M EIB-M2*

Distributor

Accessories

Technical information

gesis

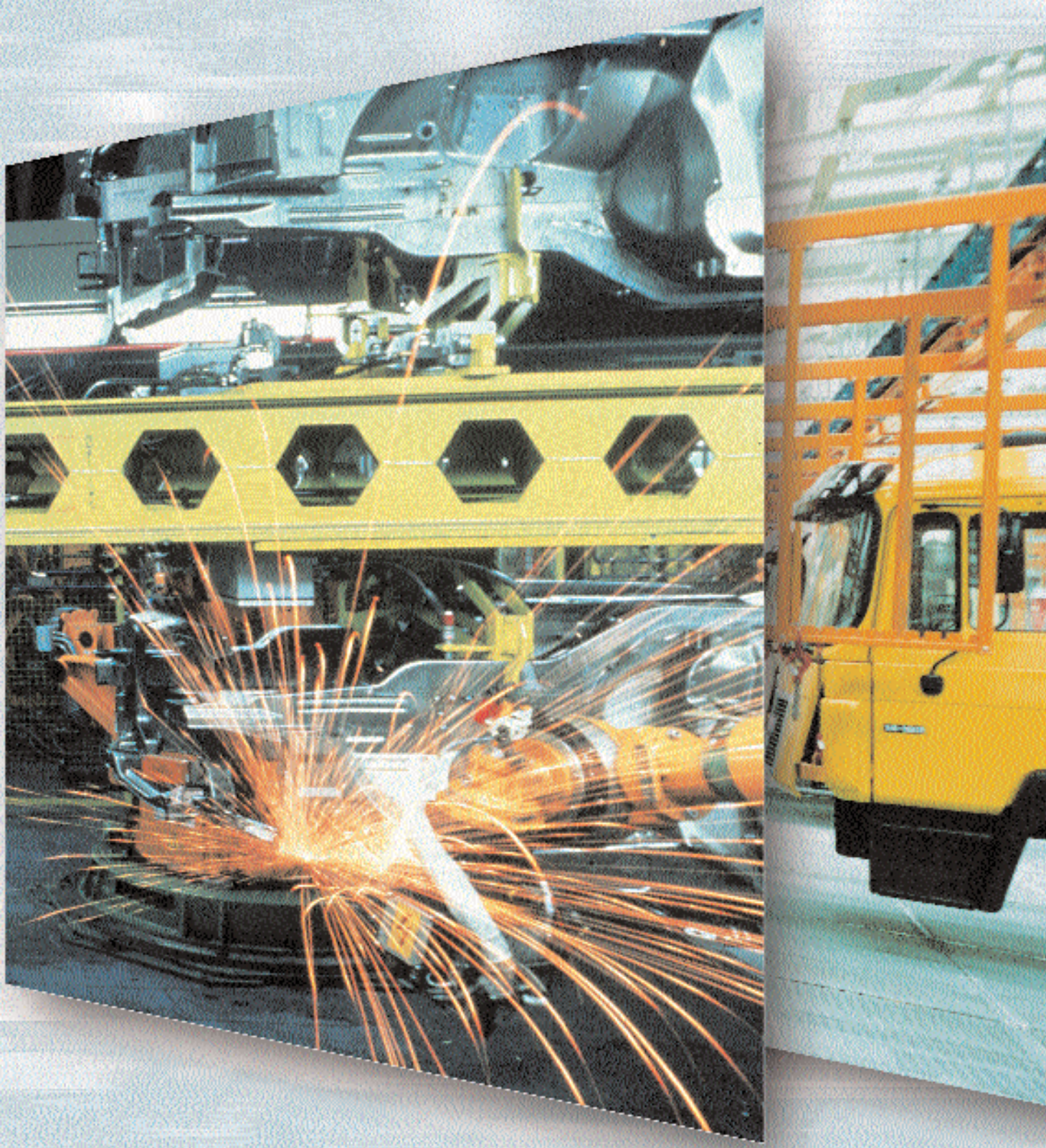

revos

Industrial Multipole Connectors

revos

Series		Rated voltage		Rated current
Introduction	Industrial multipole connectors	VDE	UL/CSA	
revos BASIC	Inserts/hoods and housings	500 V	600 V	16 A
	Multipole adapters	500 V	600 V	16 A
	Inserts/hoods and housings	690 V/400 V	600 V	16 A
	Multipole adapters	500 V	600 V	16 A
	Inserts/hoods and housings	690 V	600 V	16 A
	Multipole adapters	500 V	600 V	16 A
	Multiple multipole connectors	500 V	600 V	16 A
	Sets with 2 components			
	– Multipole adapters	500 V	600 V	16 A
	– Multipole adapters	500 V	600 V	16 A
	– Multipole adapters	690 V/400 V	600 V	16 A
	Sets with 4 components	500 V	600 V	16 A
	Strain relief frames	500 V	600 V	16 A
		690 V	600 V	16 A
		250 V	600 V	10 A
	EMC			
revos POWER		400 V	600 V	35 A
		690 V	600 V	35 A
		690 V/400 V	600 V	82 A
		690 V	600 V	35 A/16 A
		690 V/400 V 400 V/230 V	600 V	40 A/16 A
		690 V/400 V	600 V	100 A/40 A/16 A
		690 V/400 V	600 V	82 A/16 A CSA 70 A/16 A
revos MINI		250 V + 400 V	600 V	10 A
		50 V + 250 V	42 V + 600 V	10 A
revos HD	Inserts/hoods and housings	250 V	600 V	10 A
	Multipole adapters	250 V	600 V	10 A
revos FLEX	Cable to cable couplings	100 V to 1000 V	60 V – 600 V	CSA 5 A – 35 A 5 A to 40 A
revos IT	Data cable feed-through D-SUB			
revos MOT		690 V		16 A
revos SLIDE		250 V		10 A
revos EEx i	Special version	90 V		16 A
revos	**Accessories**			

CONTENTS

Number of poles + ground	Connection style	
		Page 614
6, 10, 16, 24, 32, 48	Screw, crimp, spring connection	Page 630
6, 10, 16, 24, 32, 48	Screw and spring connection	Page 630
3, 6, 10, 16, 20, 26, 32	Screw connection	Page 642
3, 6, 10	Screw and spring connection	Page 642
6, 10, 16, 24, 32, 48	Screw and crimp connection	Page 654
6, 10, 16, 24	Screw and spring connection	Page 654
16, 24	Screw connection	Page 664
6, 10, 16, 24	Screw connection	Page 666
6, 10, 16, 24	Screw connection	Page 668
3, 6, 10	Screw connection	Page 670
6, 10, 16, 24	Screw connection	Page 672
6, 10, 16, 24	Screw and crimp connection	Page 674
6, 10, 16, 24	Screw and crimp connection	Page 678
40, 64	Screw and crimp connection	Page 682
6, 10, 16, 24		Page 684
6	Screw connection	Page 688
6	Screw connection	Page 692
4	Screw connection	Page 696
4- / 6	Screw connection	Page 698
6- / 6	Screw connection	Page 702
3- / 3- / 6	Screw connection	Page 704
4- / 2	Screw connection	Page 706
3, 4	Screw connection	Page 712
7, 8	Crimp connection	Page 712
15, 25, 40, 64	Crimp connection	Page 718
		Page 732 Page 740
9 to 100	Solder connection	Page 754 Page 756
10	Crimp connection	Page 758
24	Crimp connection	Page 760
6, 10, 16, 24, 48	Screw connection	Page 766
		Page 774

Industrial multipole connectors
General

Industrial multipole connectors are specially designed for applications under extreme external conditions. The main areas of application are the automotive industry, machine construction and industrial system building, and I&C technology.

They make the installation of machines and industrial systems easier and help to save time. The units or components can be put to in-house quality checks and make the start-up of industrial systems much easier and faster.

Industrial multipole connectors by Wieland have existed in their proven quality for centuries. Today, they are integrated into new product families:

revos BASIC — the proven robust multipole connectors in a comprehensive and versatile product range

revos POWER — for rated currents higher than 16 A, also available with mixed contacts

revos MINI — our robust small connectors in 3pole through 8pole configurations

revos HD — high-density connector family 15pole through 64pole configurations accord. to DIN EN 175301-801

revos FLEX — modular system for an efficient, intelligent mixture of contacts in industrial multipole connectors

combinations of 4 frame sizes, 5 different inserts, 17 contact variants and 306 hood/housing varieties meet all possible requirements

revos IT — data cable feedthrough – the ideal solution for cable entries into closed-bottom housings. They provide a tight connection with strain relief, without disconnecting

revos MOT — the new generation of multipole connectors with a plastic housing made from UV and salt water resistant Polyamide

easy handling due to the unique locking lever. 10pole version for rated voltages of 690 V AC and rated currents of 16 A

revos SLIDE — the new 24pole multipole connector with floating connections for applications in the control cabinet. Safe and automatic connection for applications with the EX slide-in technique are guaranteed by the available guiding pins.

revos Ex — EEx ia connectors for applications in explosion hazardous areas such as in mining and oil refineries

zone 1 applications are only possible with robust hoods and housings made from zinc die cast aluminum with blue finish

revos class I, Zone 2 multipole kits are available certified to CSA standard C 22.2 182.3, E-79-15-95.

revos

Industrial multipole connectors
Hoods and housings

revos

revos BASIC

Areas of application
For most demanding requirements such as in the automotive industry, in machine construction, in industrial system building, and for the I&C technology

Identification
Hoods and housings with silicon-free finish in silver gray (similar to RAL 7001)

Material
die cast aluminum alloy

Locking levers
zinc-plated steel

Cable glands
special cable glands for hoods with strain relief and/or protection against bending

revos MOT- Hoods and housings for demanding environmental conditions

Areas of application
For aggressive environments and extreme climatic conditions in all types of applications

Identification
Hoods and housings in black (RAL 9005)

Material
Polyamide

Locking spring
stainless steel

Cable glands
special cable glands made from plastic material with strain relief and protection against bending

revos BASIC- Hoods and housings for extreme environmental conditions

Areas of application
For electrical interfaces in exterior applications, for extreme climatic conditions or wet zones, and for exterior railway applications

Identification
gray coloring, internal gaskets

Material
corrosion-resistant die cast aluminum alloy

Locking levers
galvanically zinc-plated steel

Cable glands
special cable glands (not part of the standard scope of supply)

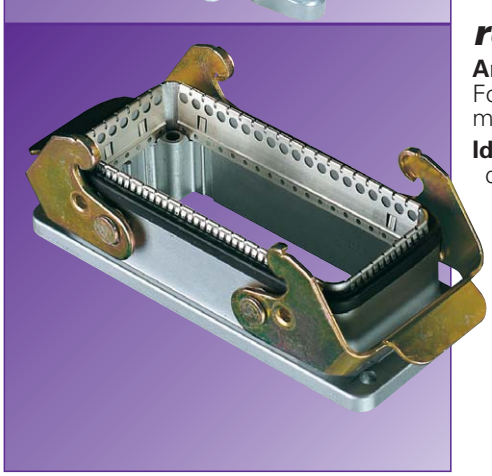

revos BASIC - Hoods and housings with high EMI shielding

Areas of application
For all applications in which protection against electric, magnetic or electromagnetic fields is required for the safety of the industrial system

Identification
conductive surface, silver-plated contact zone

Material
die cast aluminum alloy

Locking levers
zinc-plated steel

Cable glands
EMC cable glands

revos

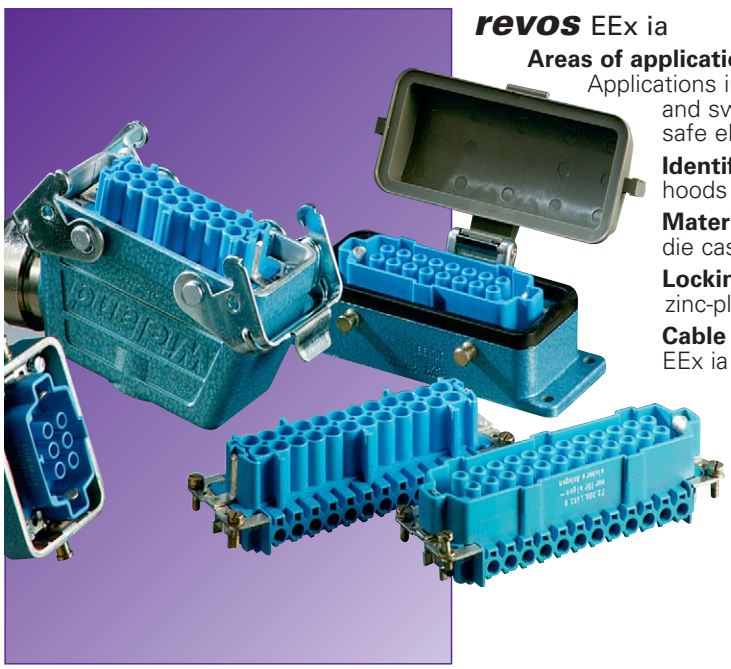

revos EEx ia

Areas of application
Applications in mining, in machine construction, in control system and switchgear building, especially in instrinsically safe electrical systems

Identification
hoods and housings with light blue finish

Material
die cast aluminum alloy

Locking levers
zinc-plated steel

Cable glands
EEx ia cable glands

Please contact us for Class I, Zone 2 Multipole Kits, certified to CSA standard: C 22.2 182.3, E-79-15-95

revos MINI - small design

Areas of application
Applications in machine construction, in control system and switchgear building, inside of lighting systems and small motors

Identification
plastic: gray
metal: silicon-free finish in gray

Material
thermoplastic material
zinc die cast aluminum alloy

Locking levers
zinc-plated steel

Cable glands
standard cable glands

ZERTIFIZIERTES QUALITÄTSSICHERUNGSSYSTEM
Reg.-Nr. 14 194-02

Industrial multipole connectors
Female and male connector inserts

revos

- ❒ Mounted in the direction of the power flow (female insert is live)
- ❒ No mismating due to the special design of the female and male inserts
- ❒ Consecutive numbers both on the contact and on the connection sides
- ❒ Mixed contacts possible

with screw connection

- ❒ Captive hardware
- ❒ Screws are protected against accidental loosening
- ❒ Delivered with open clamping body
- ❒ Versions with and without wire guard
- ❒ Wire guards prevent stranded wires from being damaged
- ❒ Due to an integrated screwdriver guide, both electric and pneumatic screwdrivers can be used

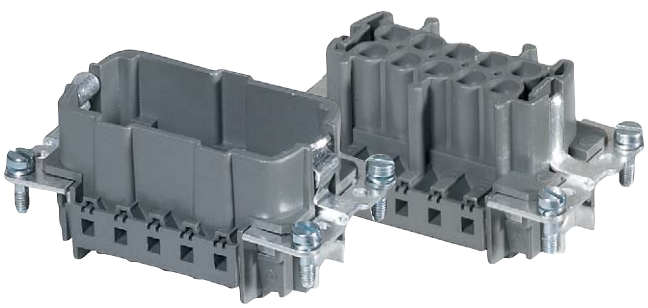

with crimp connection

- ❒ Corrosion-resistant due to gas-tight connections (cold welding)
- ❒ Constant feed through resistance
- ❒ Rapid mounting
- ❒ Crimp contacts safely latch into the female and male inserts
- ❒ Female and male contacts in various cross sections
- ❒ The cross sections are represented by ID rings on the contacts:

0.50	mm^2	– ring	20 AWG
0.75 – 1	mm^2	1 ring	18 AWG
1.50	mm^2	2 rings	16 AWG
2.50	mm^2	3 rings	14 AWG
4.00	mm^2	– ring	12 AWG

For crimping tools see ***facts*** & DATA

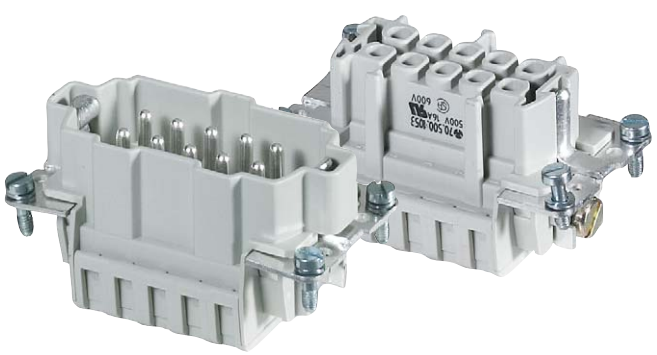

with spring connection

- ❒ Vibration and shock proof connections
- ❒ Low feed through resistance
- ❒ Connection style: 0.14 – 2.5 mm^2 26 – 12 AWG, solid and fine stranded
- ❒ High installation comfort due to TOP connections
- ❒ Wire entry in parallel to the screwdriver
- ❒ Screwdriver blade: 3.5 mm x 0.5 mm
- ❒ Plug together with the screw and crimp connectors

Materials

revos

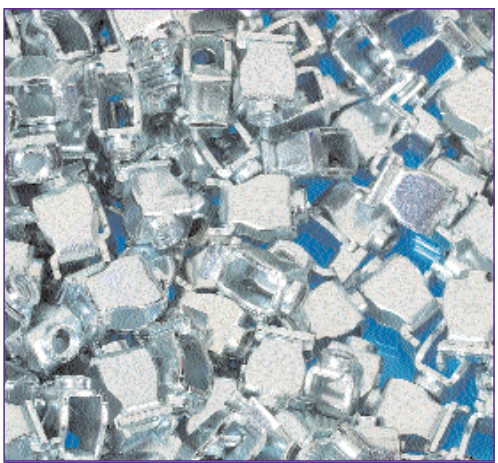

for screw connection

- ❒ Contact parts: Brass with surface treatment
- ❒ Wire guard: phosphor bronze
- ❒ Clamping screws: galvanically refined steel

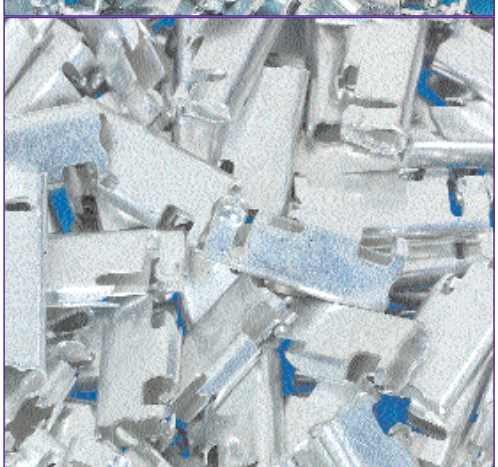

for crimp connection

- ❒ Female and male contacts: brass, galvanic surface treatment

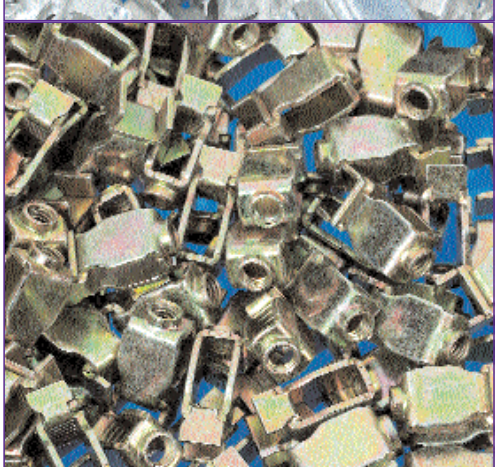

for spring connections

- ❒ Spring: refined spring steel
- ❒ Current carrying bar: copper alloy, with galvanic surface treatment

for female and male connector inserts

- ❒ Insulating parts from fiberglass reinforced Polyamide
  (for technical information see ***facts*** & DATA)

for multipole adapters

- ❒ Insulating part: Polyamide
  Contact parts: tin-plated brass

Industrial multipole connectors

revos

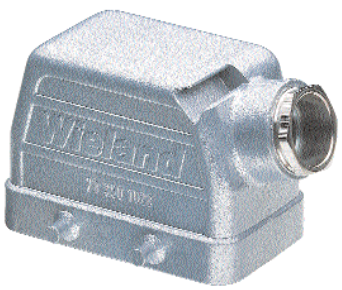

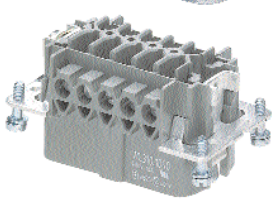

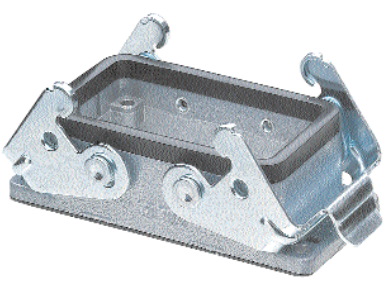

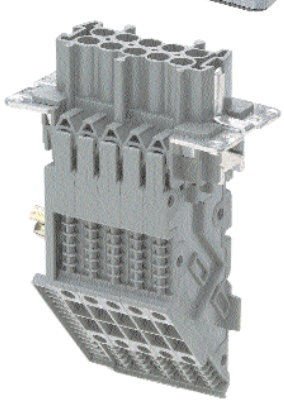

Technical information:

Material:

Hoods and housing:	die cast aluminum alloy
Surface:	silver gray, silicon-free finish
Mounting plates for female and male connector inserts:	nickel-plated brass
Ground contact screw connection:	nickel-plated brass
Male pins and female contacts:	Brass with surface treatment
Clamping screws:	galvanically zinc-plated steel
Locking levers:	galvanically zinc-plated and dichromated steel
Pressure screw:	nickel-plated brass
Pressure screw with strain relief and flared cable entry:	nickel-plated brass
Gaskets:	Neoprene (oil-resistant and anti-aging)
Hinged cover:	Polyamide
Temperature range:	-40° C – +110° C
Insulating parts for:	70.3; 70.5; 70.7; Polyamide, fiberglass reinforced
Multipole adapters:	
Female and male connector inserts:	Polyamide, fiberglass reinforced
Adapter	
Insulating part:	Polyamide
Contact parts:	tin-plated brass
Wire strip length for the multipole adapters:	9 – 12 mm
Degree of protection accord. to DIN 60 529:	IP 55

revos

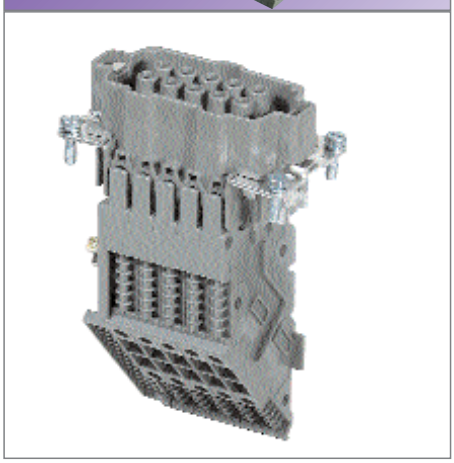

Multipole adapters

- ❑ Space-saving connection element for industrial multipole connectors consisting of: connector contact insert with snap-onconnector
- ❑ Multipole adapters are available with female or male connector inserts
- ❑ Preassembled unit complete with male housing for mounting to the control cabinet wall
- ❑ Easy handling:
  slide the multipole adapter to the housing and fix it with screws
- ❑ TOP connection design
- ❑ Testing possible when connected, i.e. no power interruption necessary
- ❑ Clearly identified and easily accessible clamping points
- ❑ 4digit or 6digit marking fields
- ❑ Safe and time-saving wiring
- ❑ Reduced control cabinet space due to the small design
- ❑ Potential commoning due to an insulated jumper bar

Industrial multipole connectors

revos

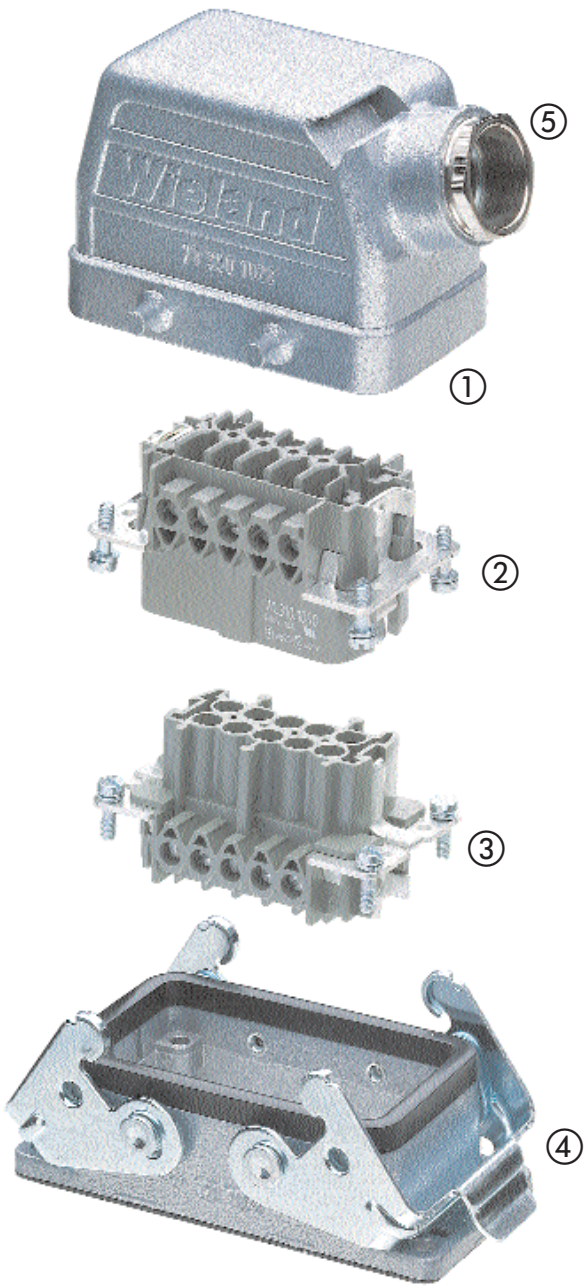

A complete industrial multipole connector consists of the following components:

① **Hood**
- ❒ low and high designs
- ❒ narrow-side, wide-side and top cable entries
- ❒ Single or double locking levers with cable glands

version 7x.xxx.xxxx.0
version 7x.xxx.xxxx.3

② **Female and**
③ **male inserts**
- ❒ screw connection
- ❒ crimp connection (contacts supplied separately)
- ❒ spring connection

④ **Housing**
- ❒ open-bottom housing
- ❒ with or without plastic cover
- ❒ single or double locking lever
- ❒ closed-bottom housing with cable glands
- ❒ low or high designs
- ❒ one or two locking levers with cable glands version 7x.xxx.xxxx.0
- ❒ cable to cable coupling

⑤ **Cable gland**
- ❒ cable glands in IP 65 made from plastic or nickel plated-brass
- ❒ special cable glands with strain relief and protection against bending
- ❒ EMC cable gland
- ❒ EX cable gland
- ❒ Large range of accessories

Accessories
- ❒ coding pins
- ❒ marking tags

The following versions of multipole connector hoods are available:

Version A

Hood with
narrow-side entry
cable gland on the right

Version B

Hood with
wide-side entry
cable gland in the front

revos

7x.xxx.xxxx.0

7x.xxx.xxxx.1

7x.xxx.xxxx.2

7x.xxx.xxxx.3

Available hoods and housings:

Hoods

❒ with cable gland, without strain relief	7x.xxx.xxxx.0
❒ with metric thread	7x.xxx.xxxx.1
❒ with integrally cast or screwed in metric intermediate support	7x.xxx.xxxx.2
❒ with strain relief	7x.xxx.xxxx.3

The cable glands are delivered together with sealing gaskets. The gaskets have different cuts for the various cable diameters and can be cut out as required.

By using the suited cable glands (see the accessories) you will achieve IP 65 degree of protection.

Version C

Hood with
top entry cable gland

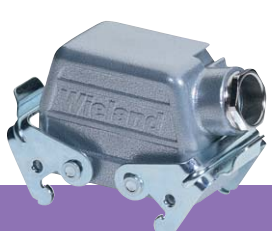

Version D

Hood with
narrow-side entry
cable gland on the right
and locking levers

Version E

Hood with
wide-side entry
cable gland in the front
and locking levers

Version F

Hood with
top entry
cable gland and lock-
ing levers

Industrial multipole connectors
Housings

revos

Housings

- open-bottom design (versions a and e)
- closed-bottom design (versions b, c, d, f, g, h and i)

Open-bottom housings

These housings are open at the bottom for panel mounting.
They are equipped with two gaskets.

- one gasket at the bottom
- another gasket between housing and hood

The main area of application is the connection of control and line signals to the control cabinet. The mating hood is mounted to the housing on the control cabinet wall.

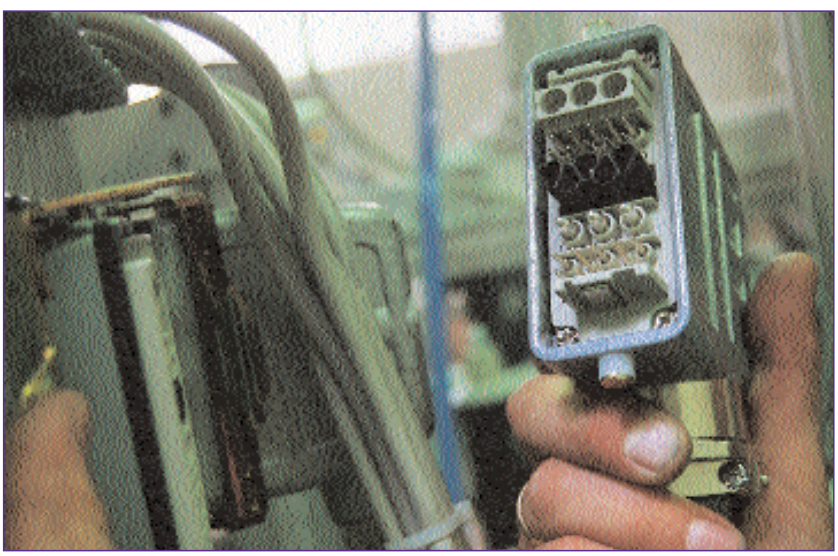

Version a

Open-bottom housing

Version b

Closed-bottom housing with two cable glands

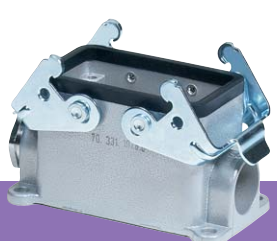

Version c

Closed-bottom housing with one narrow-side entry cable gland at the left

Version d

Closed-bottom housing with one bottom entry cable gland

revos

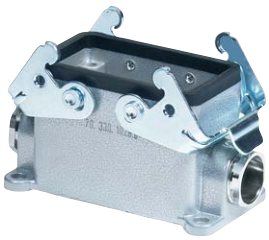

Closed-bottom housings

- with metric cable gland, without strain relief
  7x.xxx.xxxx.0

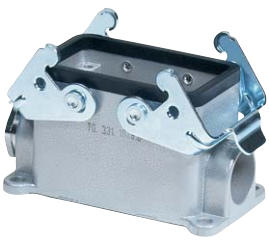

- with metric thread
  7x.xxx.xxxx.1

These housings usually have one or two cable entries. They are sealed by means of an appropriate cable gland. Additionally, the cable glands function as reliable strain reliefs for the clamping points.

Version e

Open-bottom housing with protective cover

Version f

Closed-bottom housing with protective cover and two cable glands

Version g

Closed-bottom housing with protective cover and one narrow-side entry cable gland at the left

Version h

Closed-bottom housing with protective cover and one narrow-side entry cable gland at the right

Version i

Closed-bottom housing with protective cover and one bottom entry cable gland

Information on how to change over from Pg to metric threads

revos BASIC

Pg threads are available upon request!

1. Basic legal conditions

The European standard EN 50 262 "Metric Cable Glands for Electrical Installation" was ratified on April 01, 1989 by CENELEC (European Committee for Electrotechnical Standardization) and put into force.

A corresponding German standard DIN EN 50 262 published in March 1999 will then replace the national standards:
VDE security standard 0619 quoting standards DIN 46 319 and DIN 46 320, with a transition period until March 01, 2001.

EN 50 262 is valid in all EC countries and countries not belonging to the EC and cooperating in CENELEC will accept the standard.

The big difference in the new EN standard is its character as a security standard.
As a building standard it only defines the metric thread and its lead.

2. Effects of the change

The changeover will affect all manufacturers of cable glands, cable entries and housings for rectangular connectors.

The ten Pg sizes :

Pg 7 / 9 / 11 / 13.5 / 16 / 21 / 29 / 36 / 42 and 48

are replaced by eight metric sizes :

M 12 / 16 / 20 / 25 / 32 / 40 / 50 and 63

3. Comparison of the Pg/metric cable gland sizes

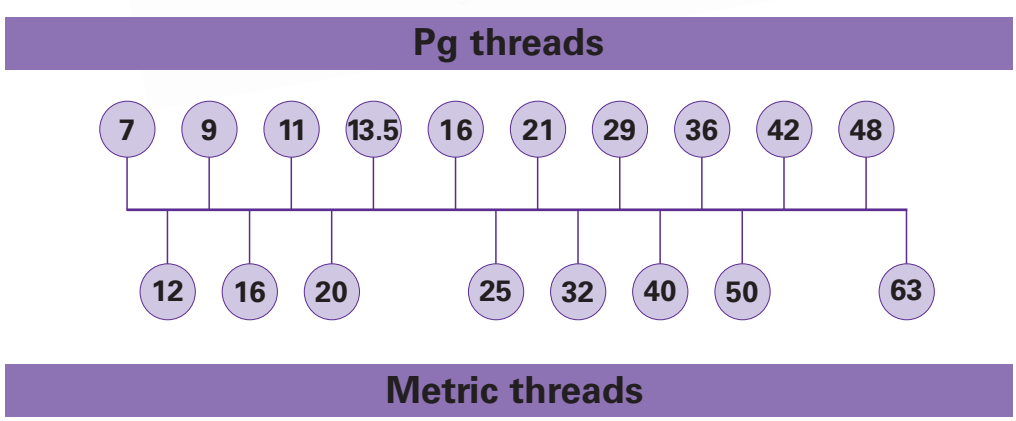

4. Assigning the Pg/metric cable glands

As the ten Pg sizes are replaced by eight metric threads, the users have to reassign the connection ranges of the cables to the thread sizes and housings.

The cable gland manufacturers have different assignments because the new standard is not a construction standard and does not specify any standardization.

5. Conversion

5.1 Comparison between Pg thread and metric thread

Pg thread	Metric thread	Preferred types
Pg 7	M 12	
Pg 9	M 16	
Pg 11	M 20	X
Pg 13.5	M 20	X
Pg 16	M 20	X
Pg 21	M 25	X
Pg 29	M 32	X
Pg 36	M 40	
Pg 42	M 50	

Hoods of the revos BASIC series with Pg thread 13.5 and 16 are also available with M 25, while PG thread 21 is also available with M 32 thread.

If you require the Pg 16 and 24 housings in M 32, you will have to use the housings of high design.

5.2 Connection range for housing versions 7x.xxx.xxxx.0

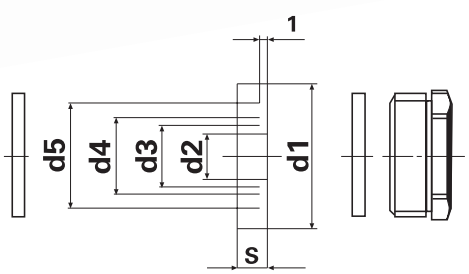

For more information visit us on the internet under www.wieland-electric.com

Please see the following table for the connection ranges of cable glands without strain relief:

Metric thread	d1	d2	Connection range in mm	d3	Connection range in mm	d4	Connection range in mm	d5	Connection range in mm
M 16	13.8	3	2 – 4.5	6	5 – 7.5	9	8 – 10.5		
M 20	17.6	4	3 – 5.5	7	6 – 8.5	10	9 – 11.5	13	12 – 14.5
M 25	22.6	8.5	7.5 – 10	11.5	10.5 – 13	14.5	13.5 – 16	17.5	16.5 – 19
M 32	29.6	16	15 – 17.5	19	18 – 20.5	22	21 – 23.5	25	24 – 26.5

5.3 Connection ranges for housing versions with flared gland 7x.xxx.xxxx.3

Metric thread	Connection range in mm
M 16	6 – 9
M 20	9 – 13.5
M 25	14 – 20
M 32	19 – 29

Information on hazardous location approval : Class I, Zone 2 Multipole Kits are available certified to CSA standard C22.2 182.3, E-79-15-95.

Please contact us to discuss your applications.

revos BASIC

Technical information

Approvals	UL, CSA, SEV
Applicable standards	IEC 61 984
Contact inserts	
Rated current	16 A
Rated voltage	500 V
Nominal voltage accord. to UL	600 V
Nominal voltage accord. to CSA	600 V
Pole configurations	6, 10, 16, 24, 32 (2x16), 48 (2x24), + ground
Screw connection	0.5 – 2.5 mm^2 / 20 – 12 AWG
Crimp connection	0.5 – 4.0 mm^2 / 20 – 12 AWG
Spring connection	0.14 – 2.5 mm^2 / 26 – 12 AWG
Degree of pollution	3
Temperature range	–40 to +110 °C
Multipole adapter	
Rated current	16 A
Rated voltage	500 V
Nominal voltage accord. to UL	600 V
Nominal voltage accord. to CSA	600 V
Pole configurations	6, 10, 16, 24, + ground
Screw connection	0.5 – 4.0 mm^2 / 20 – 12 AWG
Spring connection	0.5 – 2.5 mm^2 / 20 – 12 AWG
Degree of pollution	3
Temperature range	–40 to +110 °C
Contacts	
Material	copper alloy
Surface (screw, crimp, multipole adapter contacts)	tin-plated
Surface (crimp, screw contacts)	gold-plated
Surface (crimp, spring contacts)	silver-plated
Hoods and housings	
Material	die cast aluminum alloy
Surface	silver gray, silicon-free finish
Locking levers	zinc-plated steel
Gaskets	NBR
Temperature range	–40 to +110 °C
Degree of protection accord. to DIN EN 60 529	
with latched locking levers	IP 55
with appropriate cable gland	IP 65

revos

Industrial Multipole Connectors

Industrial Multipole Connectors
Female/male inserts and multipole adapter

revos BASIC

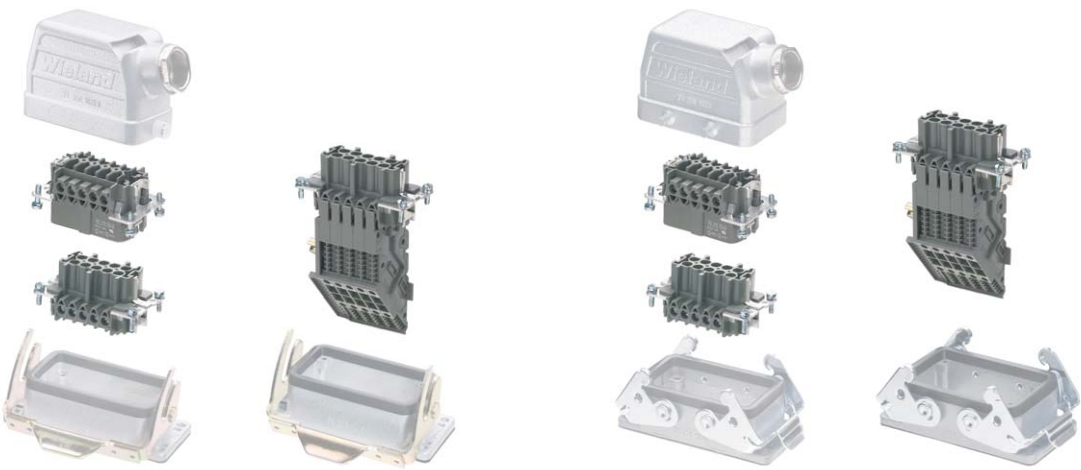

500 V, **16 A** IEC 61 984 **600 V** UL/CSA

		Rated current	Cross section	Approvals	Wire strip length	Contacts	Std. pack
Screw connection	Female insert	16 A	0.25 – 2.5 mm² 22 – 12 AWG		7 mm	tin-plated	10
							5
					7 mm	gold-plated	10
	Male insert	16 A	0.25 – 2.5 mm² 22 – 12 AWG		7 mm	tin-plated	10
							5
					7 mm	gold-plated	
Crimp connection	Female insert without crimp contacts	16 A	0.5 – 4.0 mm² 20 – 12 AWG		7 mm	tin-plated	10
							5
	Male insert without crimp contacts	16 A	0.5 – 4.0 mm² 20 – 12 AWG		7 mm	tin-plated	10
							5
Spring connection	Female insert 500 V / IEC 61 989	16 A	0.14 – 2.5 mm² 26 – 12 AWG		7 mm	silver-plated	10
							5
	Male insert 500 V / IEC 61 989	16 A	0.14 – 2.5 mm² 26 – 12 AWG		7 mm	silver-plated	10
							5
Screw connection Multipole adapter long design (6 marking fields)	Female insert, ground right	16 A	0.5 – 4.0 mm² 20 – 12 AWG		12 mm	tin-plated	10
	Female insert, ground left	16 A	0.5 – 4.0 mm² 20 – 12 AWG		12 mm	tin-plated	10
	Male insert, ground right	16 A	0.5 – 4.0 mm² 20 – 12 AWG		12 mm	tin-plated	10
	Male insert, ground left	16 A	0.5 – 4.0 mm² 20 – 12 AWG		12 mm	tin-plated	10
Screw connection Multipole adapter short design (4 marking fields)	Female insert, ground right	16 A	0.5 – 4.0 mm² 20 – 12 AWG		12 mm	tin-plated	10
	Female insert, ground left	16 A	0.5 – 4.0 mm² 20 – 12 AWG		12 mm	tin-plated	10
	Male insert, ground right	16 A	0.5 – 4.0 mm² 20 – 12 AWG		12 mm	tin-plated	10
	Male insert, ground left	16 A	0.5 – 4.0 mm² 20 – 12 AWG		12 mm	tin-plated	10
Spring connection Multipole adapter short design (6 marking fields)	Female insert, ground right	16 A	0.5 – 2.5 mm² 20 – 12 AWG		9 mm	tin-plated	10
	Female insert, ground left	16 A	0.5 – 2.5 mm² 20 – 12 AWG		9 mm	tin-plated	10
	Male insert, ground right	16 A	0.5 – 2.5 mm² 20 – 12 AWG		9 mm	tin-plated	10
	Male insert, ground left	16 A	0.5 – 2.5 mm² 20 – 12 AWG		9 mm	tin-plated	10

revos

Contacts for crimp version

	Cross section mm²		Part no.	Std. pack	Cross section mm²		Part no.	Std. pack
			tin-plated				gold-plated	
Female contacts	0.5	20 AWG	02.123.7021.0	200	0.5	20 AWG	02.123.7001.0	
	0.75 – 1	18 AWG	02.123.7121.0	200	0.75 – 1	18 AWG	02.123.7101.0	
	1.5	16 AWG	02.123.7221.0	200	1.5	16 AWG	02.123.7201.0	200
	2.5	14 AWG	02.123.7321.0	200	2.5	14 AWG	02.123.7301.0	
	4	12 AWG	02.123.7421.0	200	4	12 AWG	02.123.7401.0	
Male contacts	0.5	20 AWG	05.543.7021.0	200	0.5	20 AWG	05.543.7001.0	
	0.75 – 1	18 AWG	05.543.7121.0	200	0.75 – 1	18 AWG	05.543.7101.0	
	1.5	16 AWG	05.543.7221.0	200	1.5	16 AWG	05.543.7201.0	200
	2.5	14 AWG	05.543.7321.0	200	2.5	14 AWG	05.543.7301.0	
	4	12 AWG	05.543.7421.0	200	4	12 AWG	05.543.7401.0	
Crimping tool			95.101.0800.0	1			silver-plated	
Crimping die „B“			05.502.2100.0	1			upon request	
Contact positioner „3“			05.502.3300.0	1				
Extraction tool			05.502.3500.0	1				

6pole + ground	10pole + ground	16pole + ground	24pole + ground	32pole + ground 2 insert 1 – 16 poles 17 – 32 poles	48pole + ground 2 inserts 1 – 24 poles 25 – 48 poles
Part no.	Part no.	Part no.	Part no.	Part no.	Part no.
70.300.0640.0 70.301.0640.0	70.300.1040.0 70.301.1040.0	70.300.1640.0 70.301.1640.0	70.300.2440.0 70.301.2440.0	70.300.3253.0	70.300.4840.0
70.310.0640.0 70.311.0640.0	70.310.1040.0 70.311.1040.0	70.310.1640.0 70.311.1640.0	70.310.2440.0 70.311.2440.0	70.310.3253.0	70.310.4840.0
70.700.0658.0	70.700.1058.0	70.700.1658.0	70.700.2458.0	70.700.3253.0	70.700.4858.0
70.710.0658.0	70.710.1058.0	70.710.1658.0	70.710.2458.0	70.710.3253.0	70.710.4858.0
70.500.0653.0	70.500.1053.0	70.500.1653.0	70.500.2453.0	70.500.3253.0	70.500.4853.0
70.510.0653.0	70.510.1053.0	70.510.1653.0	70.510.2453.0	70.510.3253.0	70.510.4853.0
70.105.0653.3 70.100.0653.3	70.105.1053.3 70.100.1053.3	70.105.1653.3 70.100.1653.3	70.105.2453.3 70.100.2453.3	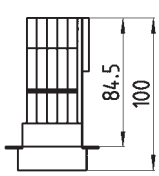	
70.115.0653.3 70.110.0653.3	70.115.1053.3 70.110.1053.3	70.115.1653.3 70.110.1653.3	70.115.2453.3 70.110.2453.3		
70.105.0653.4 70.100.0653.4	70.105.1053.4 70.100.1053.4	70.105.1653.4 70.100.1653.4	70.105.2453.4 70.100.2453.4	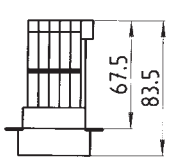	
70.115.0653.4 70.110.0653.4	70.115.1053.4 70.110.1053.4	70.115.1653.4 70.110.1653.4	70.115.2453.4 70.110.2453.4		
70.106.0653.0 70.101.0653.0	70.106.1053.0 70.101.1053.0	70.106.1653.0 70.101.1653.0	70.106.2453.0 70.101.2453.0	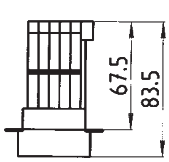	
70.116.0653.0 70.111.0653.0	70.116.1053.0 70.111.1053.0	70.116.1653.0 70.111.1653.0	70.116.2453.0 70.111.2453.0		

Industrial Multipole Connectors
Hoods with a single locking lever

revos BASIC

Hood type A

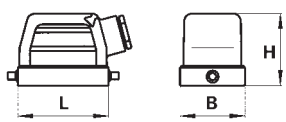

Hood type B

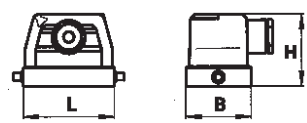

Hood type C

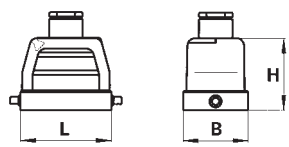

Degree of protection IP 55
Degree of protection IP 65 with matching cable glands (see accessories)

For inserts: **600 V** UL/CSA

For inserts: **500 V** IEC 61 984

Number of poles	Thread	Gland type	Dimensions in mm	L	W	H	Std. pack
Size **6** for connector **6pole + ground**	M 20	0 with cable gland 1 with threaded collar 2 with intermediate support 3 with strain relief		60	43	47.5	1
	M 25	0 with cable gland 1 with threaded collar 2 with intermediate support 3 with strain relief		60	43	47.5	1
Size **10** for connector **10pole + ground**	M 20	0 with cable gland 1 with threaded collar 2 with intermediate support 3 with strain relief		73	43	53	1
	M 25	0 with cable gland 1 with threaded collar 2 with intermediate support 3 with strain relief		73	43	53	1
Size **16** for connector **16pole + ground**	M 25	0 with cable gland 1 with threaded collar 2 with intermediate support 3 with strain relief		93.5	43	60	1
	M 32	0 with cable gland 1 with threaded collar 2 with intermediate support 3 with strain relief		93.5	43	60	1
Size **24** for connector **24pole + ground**	M 25	0 with cable gland 1 with threaded collar 2 with intermediate support 3 with strain relief		120	43	70	1
	M 32	0 with cable gland 1 with threaded collar 2 with intermediate support 3 with strain relief		120	43	70	1
Size **48** for connector **48pole + ground**	M 32	0 with cable gland 1 with threaded collar 2 with intermediate support 3 with strain relief		132	90	107	1
	M 40	1 with threaded collar 2 with intermediate support		132	90	107	1

revos

Hood Hood type A	Hood (not suited for female/male inserts with spring connection) for 24pole = 2 x M 25 Hood type B	Hood Hood type C	
Part no.	Part no.	Part no.	
70.350.0635.0 70.350.0635.1 70.350.0635.2 70.350.0635.3	70.351.0635.0 70.351.0635.1 70.351.0635.2 70.351.0635.3	70.352.0635.0 70.352.0635.1 70.352.0635.2 70.352.0635.3	
70.353.0635.0 70.353.0635.1 70.353.0635.2 70.353.0635.3		70.354.0635.0 70.354.0635.1 70.354.0635.2 70.354.0635.3	
71.350.1035.0 71.350.1035.1 71.350.1035.2 71.350.1035.3	71.351.1035.0 71.351.1035.1 71.351.1035.2 71.351.1035.3	71.352.1035.0 71.352.1035.1 71.352.1035.2 71.352.1035.3	
71.353.1035.0 71.353.1035.1 71.353.1035.2 71.353.1035.3		71.354.1035.0 71.354.1035.1 71.354.1035.2 71.354.1035.3	
71.350.1635.0 71.350.1635.1 71.350.1635.2 71.350.1635.3	71.351.1635.0 71.351.1635.1 71.351.1635.2 71.351.1635.3	71.352.1635.0 71.352.1635.1 71.352.1635.2 71.352.1635.3	
71.353.1635.0 71.353.1635.1 71.353.1635.2 71.353.1635.3		71.354.1635.0 71.354.1635.1 71.354.1635.2 71.354.1635.3	
71.350.2435.0 71.350.2435.1 71.350.2435.2 71.350.2435.3	71.351.2435.0 71.351.2435.1 71.351.2435.2 71.351.2435.3	71.352.2435.0 71.352.2435.1 71.352.2435.2 71.352.2435.3	
71.353.2435.0 71.353.2435.1 71.353.2435.2 71.353.2435.3		71.354.2435.0 71.354.2435.1 71.354.2435.2 71.354.2435.3	
70.350.4835.0 70.350.4835.1 70.350.4835.2 70.350.4835.3		70.352.4835.0 70.352.4835.1 70.352.4835.2 70.352.4835.3	
70.353.4835.1 70.353.4835.2		70.354.4835.1 70.354.4835.2	

Industrial Multipole Connectors
Housings with a single locking lever

revos BASIC

Housing type a

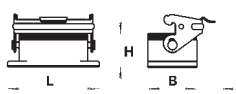

Housing type b

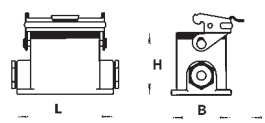

Housing type c

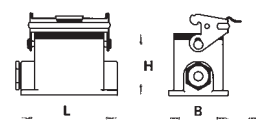

Housing type d

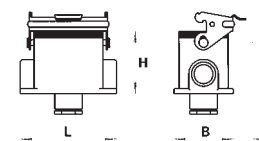

Housing type i

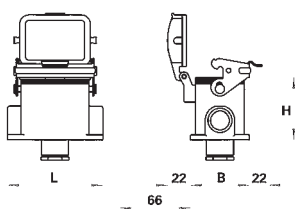

Housing open bottom

Housing type a

Housing closed bottom with two cable glands

Housing type b

Housing closed bottom with one cable gland on the left

Housing type c

Degree of protection IP 55
Degree of protection IP 65 with matching cable glands (see accessories)

For inserts: **600 V** UL/CSA

For inserts: **500 V** IEC 61 984

Number of poles	Thread	Gland type	L	W	H	Std. pack	Housing open bottom Part no.	Housing closed bottom with two cable glands Part no.	Housing closed bottom with one cable gland on the left Part no.
Size **6** for connector **6pole + ground**	M 20	0 with cable gland	80	43	28	1	70.320.0628.0		
			84	52	54.5	1		70.330.0635.0	70.331.0635.0
		1 with threaded collar	84	52	54.5	1		70.330.0635.1	70.331.0635.1
Size **10** for connector **10pole + ground**	M 20	0 with cable gland	93	43	28	1	71.320.1028.0		
			94	52	54.5	1		71.330.1035.0	71.331.1035.0
		1 with threaded collar	94	52	54.5	1		71.330.1035.1	71.331.1035.1
Size **16** for connector **16pole + ground**	M 25	0 with cable gland	113	43	28	1	71.320.1628.0		
			117	52	56.5	1		71.330.1635.0	71.331.1635.0
		1 with threaded collar	117	52	56.5	1		71.330.1635.1	71.331.1635.1
Size **16** high design for connector **16pole + ground**	M 32	0 with cable gland	117	52	76.5	1		76.334.4035.0	76.335.4035.0
		1 with threaded collar	117	52	76.5	1		76.334.4035.1	76.335.4035.1
Size **24** for connector **24pole + ground**	M 25	0 with cable gland	140	43	28	1	71.320.2428.0		
			144	52	56.5	1		71.330.2435.0	71.331.2435.0
		1 with threaded collar	144	52	56.5	1		71.330.2435.1	71.331.2435.1
Size **24** high design for connector, **24pole + ground**	M 32	0 with cable gland	144	52	76.5	1		76.334.6435.0	76.335.6435.0
		1 with threaded collar	144	52	76.5	1		76.334.6435.1	76.335.6435.1
Size **48** for connector **48pole + ground**	M 32	0 with cable gland	124	84	35	1	70.320.4828.0		
			146	120	99	1			70.331.4835.0
		1 with threaded collar	146	120	99	1			70.331.4835.1
		3 with strain relief	146	120	99	1			70.331.4835.3
	M 40	1 with threaded collar	146	120	99	1			

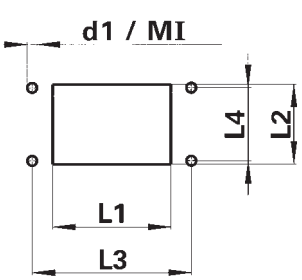

Mounting dimensions for open bottom housings

Housing size	Cut-out (mm)		Mounting holes (mm)			
	L1	L2	L3	L4	d1 (mm)	MI
6	52	35	70	32	4.3	M 4
10	65	35	83	32	4.3	M 4
16	85.5	35	103	32	4.3	M 4
24	112	35	130	32	4.3	M 4
48	117	81	148	70	6.4	M 6

revos

Housing type e

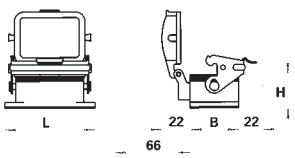

Housing type f

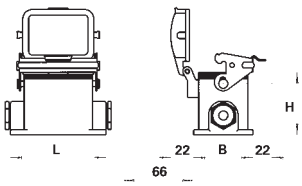

Housing type g

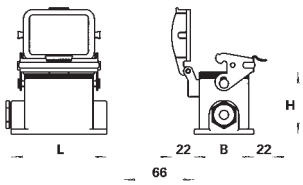

Housing type h

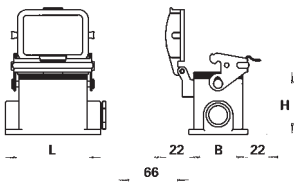

Housing closed bottom with cable gland at the bottom Housing type d	Housing open bottom with protective cover Housing type e	Housing closed bottom with two cable glands and protective cover Housing type f	Housing closed bottom with cable gland on the left and protective cover Housing type g	Housing closed bottom with cable gland on the right and protective cover Housing type h	Housing closed bottom with cable gland at the bottom and protective cover Housing type i
Part no.	Part no.	Part no.	Part no.	Part no.	Part no.
70.333.0635.0 70.333.0635.1	70.325.0628.0	70.340.0635.0 70.340.0635.1	70.341.0635.0 70.341.0635.1	70.342.0635.0 70.342.0635.1	70.343.0635.0 70.343.0635.1
71.333.1035.0 71.333.1035.1	71.325.1028.0	71.340.1035.0 71.340.1035.1	71.341.1035.0 71.341.1035.1	71.342.1035.0 71.342.1035.1	71.343.1035.0 71.343.1035.1
71.333.1635.0 71.333.1635.1	71.325.1628.0	71.340.1635.0 71.340.1635.1	71.341.1635.0 71.341.1635.1	71.342.1635.0 71.342.1635.1	71.343.1635.0 71.343.1635.1
76.337.4035.0 76.337.4035.1		76.344.4035.0 76.344.4035.1	76.345.4035.0 76.345.4035.1	76.346.4035.0 76.346.4035.1	76.347.4035.0 76.347.4035.1
71.333.2435.0 71.333.2435.1	71.325.2428.0	71.340.2435.0 71.340.2435.1	71.341.2435.0 71.341.2435.1	71.342.2435.0 71.342.2435.1	71.343.2435.0 71.343.2435.1
76.337.6435.0 76.337.6435.1		76.344.6435.0 76.344.6435.1	76.345.6435.0 76.345.6435.1	76.346.6435.0 76.346.6435.1	76.347.6435.0 76.347.6435.1
	70.325.4828.0		70.341.4835.1 70.341.4835.3		
			70.344.4835.1		

Housing size	L5 (mm)	L6 (mm)	d2 (mm)	MII
6	70	40	5.5	M 5
10	82	40	5.5	M 5
16	105	45	5.5	M 5
24	132	45	5.5	M 5
48	111	106	6.5	M 6

Mounting dimensions for closed-bottom housings

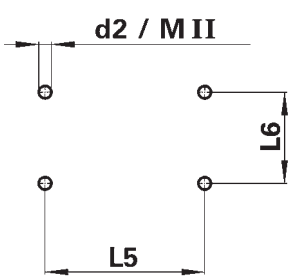

Industrial Multipole Connectors
Hoods with double locking levers

revos BASIC

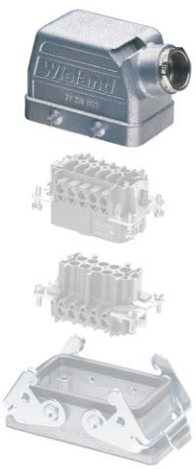

Hood type A

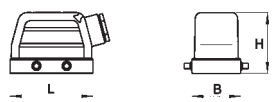

Hood type B

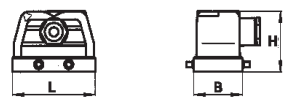

Hood type C

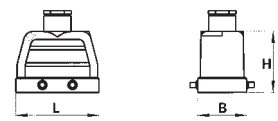

Degree of protection IP 55
Degree of protection IP 65 with matching cable glands (see accessories)

For inserts: **600 V** UL/CSA

For inserts: **500 V** IEC 61 984

Number of poles	Thread	Gland type	Dimensions in mm	L	W	H	Std. pack
Size **10** for connector **10pole + ground**	M 20	0 with cable gland 1 with threaded collar 2 with intermediate support 3 with strain relief		73	43	53	1
	M 25	0 with cable gland 1 with threaded collar 2 with intermediate support 3 with strain relief		73	43	53	1
Size **16** for connector **16pole + ground**	M 25	0 with cable gland 1 with threaded collar 2 with intermediate support 3 with strain relief		93.5	43	60	1
	M 32	0 with cable gland 1 with threaded collar 2 with intermediate support 3 with strain relief		93.5	43	60	1
Size **24** for connector **24pole + ground**	M 25	0 with cable gland 1 with threaded collar 2 with intermediate support 3 with strain relief		120	43	70	1
	M 32	0 with cable gland 1 with threaded collar 2 with intermediate support 3 with strain relief		120	43	70	1
Size **32** for connector **32pole + ground**	M 32	0 with cable gland 1 with threaded collar 2 with intermediate support 3 with strain relief		93.5	82.5	94	1
	M 40	1 with threaded collar 2 with intermediate support		93.5	82.5	94	1

revos

Hood type D

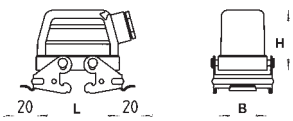

Hood type E

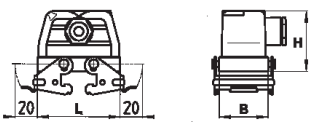

Hood type F

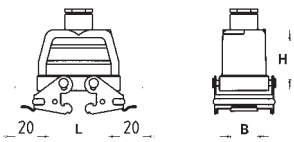

Hood Hood type A	Hood (not suited for female/male inserts with spring connection) for 24pole = 2 x M 25 Hood type B	Hood Hood type C	Hood with locking levers Hood type D	Hood with locking levers (not suited for female/male inserts with spring connection) for 24pole = 2 x M 25 Hood type E	Hood with locking levers Hood type F
Part no.	Part no.	Part no.	Part no.	Part no.	Part no.
70.350.1035.0 70.350.1035.1 70.350.1035.2 70.350.1035.3	70.351.1035.0 70.351.1035.1 70.351.1035.2 70.351.1035.3	70.352.1035.0 70.352.1035.1 70.352.1035.2 70.352.1035.3	70.355.1035.0 70.355.1035.1 70.355.1035.2 70.355.1035.3	70.356.1035.0 70.356.1035.1 70.356.1035.2 70.356.1035.3	70.357.1035.0 70.357.1035.1 70.357.1035.2 70.357.1035.3
70.353.1035.0 70.353.1035.1 70.353.1035.2 70.353.1035.3		70.354.1035.0 70.354.1035.1 70.354.1035.2 70.354.1035.3	70.358.1035.0 70.358.1035.1 70.358.1035.2 70.358.1035.3		70.359.1035.0 70.359.1035.1 70.359.1035.2 70.359.1035.3
70.350.1635.0 70.350.1635.1 70.350.1635.2 70.350.1635.3	70.351.1635.0 70.351.1635.1 70.351.1635.2 70.351.1635.3	70.352.1635.0 70.352.1635.1 70.352.1635.2 70.352.1635.3	70.355.1635.0 70.355.1635.1 70.355.1635.2 70.355.1635.3	70.356.1635.0 70.356.1635.1 70.356.1635.2 70.356.1635.3	70.357.1635.0 70.357.1635.1 70.357.1635.2 70.357.1635.3
70.353.1635.0 70.353.1635.1 70.353.1635.2 70.353.1635.3		70.354.1635.0 70.354.1635.1 70.354.1635.2 70.354.1635.3	70.358.1635.0 70.358.1635.1 70.358.1635.2 70.358.1635.3		70.359.1635.0 70.359.1635.1 70.359.1635.2 70.359.1635.3
70.350.2435.0 70.350.2435.1 70.350.2435.2 70.350.2435.3	70.351.2435.0 70.351.2435.1 70.351.2435.2 70.351.2435.3	70.352.2435.0 70.352.2435.1 70.352.2435.2 70.352.2435.3	70.355.2435.0 70.355.2435.1 70.355.2435.2 70.355.2435.3	70.356.2435.0 70.356.2435.1 70.356.2435.2 70.356.2435.3	70.357.2435.0 70.357.2435.1 70.357.2435.2 70.357.2435.3
70.353.2435.0 70.353.2435.1 70.353.2435.2 70.353.2435.3		70.354.2435.0 70.354.2435.1 70.354.2435.2 70.354.2435.3	70.358.2435.0 70.358.2435.1 70.358.2435.2 70.358.2435.3		70.359.2435.0 70.359.2435.1 70.359.2435.2 70.359.2435.3
70.350.3235.0 70.350.3235.1 70.350.3235.2 70.350.3235.3		70.352.3235.0 70.352.3235.1 70.352.3235.2 70.352.3235.3			
70.353.3235.1 70.353.3235.2		70.354.3235.1 70.354.3235.2			

Industrial Multipole Connectors
Housings with double locking levers

revos BASIC

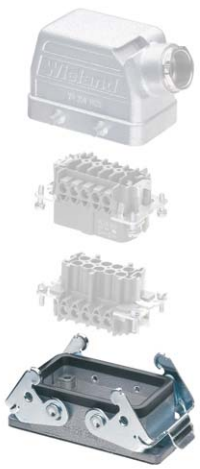

Housing type a

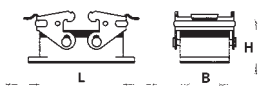

Housing type b

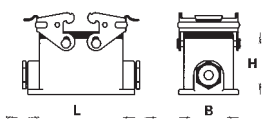

Housing type c

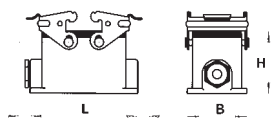

Housing type d

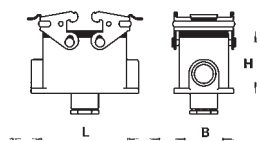

Housing type i

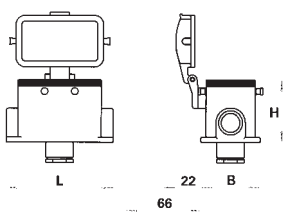

Degree of protection IP 55
Degree of protection IP 65 with matching cable glands (see accessories)

For inserts: **600 V** UL/CSA

For inserts: **500 V** IEC 61 984

Number of poles	Thread	Gland type	L	W	H	Std. pack	Housing open bottom Housing type a Part no.	Housing closed bottom with two cable glands Housing type b Part no.	Housing closed bottom with one cable gland on the left Housing type c Part no.
Size **10** for connector **10pole + ground**	M 20		93	43	28	1	70.320.1028.0		
		0 with cable gland	94	52	54.5	1		70.330.1035.0	70.331.1035.0
		1 with threaded collar	94	52	54.5	1		70.330.1035.1	70.331.1035.1
Size **16** for connector **16pole + ground**	M 25		113	43	28	1	70.320.1628.0		
		0 with cable gland	117	52	56.5	1		70.330.1635.0	70.331.1635.0
		1 with threaded collar	117	52	56.5	1		70.330.1635.1	70.331.1635.1
Size **16** for connector high design **16pole + ground**	M 32	0 with cable gland	117	52	76.5	1		73.334.4035.0	73.335.4035.0
		1 with threaded collar	117	52	76.5	1		73.334.4035.1	73.335.4035.1
Size **24** for connector **24pole + ground**	M 25		140	43	28	1	70.320.2428.0		
		0 with cable gland	144	52	56.5	1		70.330.2435.0	70.331.2435.0
		1 with threaded collar	144	52	56.5	1		70.330.2435.1	70.331.2435.1
Size **24** for connector high design **24pole + ground**	M 32	0 with cable gland	144	52	76.5	1		73.334.6435.0	73.335.6435.0
		1 with threaded collar	144	52	76.5	1		73.334.6435.1	73.335.6435.1
Size **32** for connector **32pole + ground**			124	84	35	1	70.320.3228.0		

Mounting dimensions for open-bottom housings

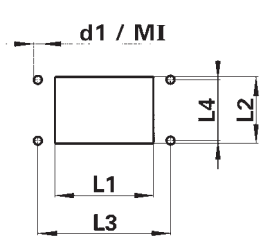

Housing size	Cut-out (mm)		Mounting holes (mm)			
	L1	L2	L3	L4	d1 (mm)	MI
10	65	35	83	32	4.3	M 4
16	85.5	35	103	32	4.3	M 4
24	112	35	130	32	4.3	M 4
32	117	81	148	70	6.4	M 6

revos

Housing type e

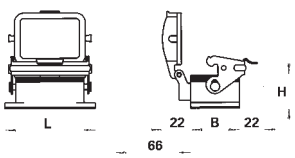

Housing type f

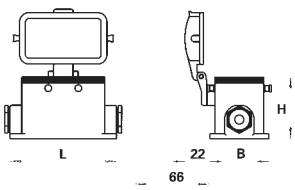

Housing type g

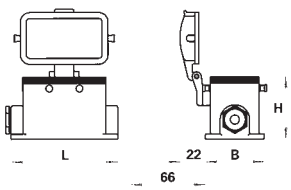

Housing type h

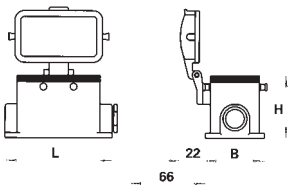

Housing closed bottom with cable gland at the bottom	Housing open bottom with protective cover	Housing closed bottom with two cable glands and protective cover	Housing closed bottom with cable gland on the left and protective cover	Housing closed bottom with cable gland on the right and protective cover	Housing closed bottom with cable gland at the bottom and protective cover
Housing type d	Housing type e	Housing type f	Housing type g	Housing type h	Housing type i
Part no.	Part no.	Part no.	Part no.	Part no.	Part no.
70.333.1035.0 70.333.1035.1	70.325.1028.0	70.340.1035.0 70.340.1035.1	70.341.1035.0 70.341.1035.1	70.342.1035.0 70.342.1035.1	70.343.1035.0 70.343.1035.1
70.333.1635.0 70.333.1635.1	70.325.1628.0	70.340.1635.0 70.340.1635.1	70.341.1635.0 70.341.1635.1	70.342.1635.0 70.342.1635.1	70.343.1635.0 70.343.1635.1
73.337.4035.0 73.337.4035.1		73.344.4035.0 73.344.4035.1	73.345.4035.0 73.345.4035.1	73.346.4035.0 73.346.4035.1	73.347.4035.0 73.347.4035.1
70.333.2435.0 70.333.2435.1	70.325.2428.0	70.340.2435.0 70.340.2435.1	70.341.2435.0 70.341.2435.1	70.342.2435.0 70.342.2435.1	70.343.2435.0 70.343.2435.1
73.337.6435.0 73.337.6435.1		73.344.6435.0 73.344.6435.1	73.345.6435.0 73.345.6435.1	73.346.6435.0 73.346.6435.1	73.347.6435.0 73.347.6435.1

Mounting dimensions for closed-bottom housings

Housing size	L5 (mm)	L6 (mm)
10	82	40
16	105	45
24	132	45

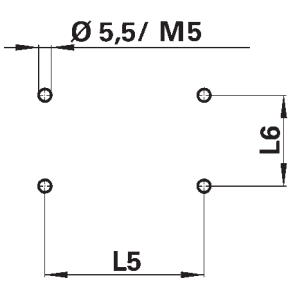

revos BASIC

Technical information

■ Approvals	UL, CSA, MEEI, SEV
■ Applicable standards	IEC 61 984
■ Contact inserts	
Rated current	16 A
Rated voltage	690/400 V
Nominal voltage accord. to UL	600 V
Nominal voltage accord. to CSA	600 V
Pole configurations	3, 6, 10, 16, 20 (2x10), 26 (10/16), 32 (2x16) + ground
Screw connection	0.5 – 2.5 mm^2 / 20 – 12 AWG
Degree of pollution	3
Temperature range	–40 to +110 °C
■ Multipole adapter	
Rated current	16 A
Rated voltage	500 V
Nominal voltage accord. to UL	600 V
Nominal voltage accord. to CSA	600 V
Pole configurations	3, 6, 10 + ground
Screw connection	0.5 – 4.0 mm^2 / 20 – 12 AWG
Degree of pollution	3
Temperature range	–40 to +110 °C
■ Contacts	
Material	copper alloy
Surface	tin-plated
■ Hoods and housings	
Material	die cast aluminum alloy
Surface	silver gray, silicon-free finish
Locking levers	zinc-plated steel
Gaskets	NBR
Temperature range	–40 to +110 °C
Degree of protection accord. to DIN EN 60 529	
with latched locking levers	IP 55
with appropriate cable gland	IP 65

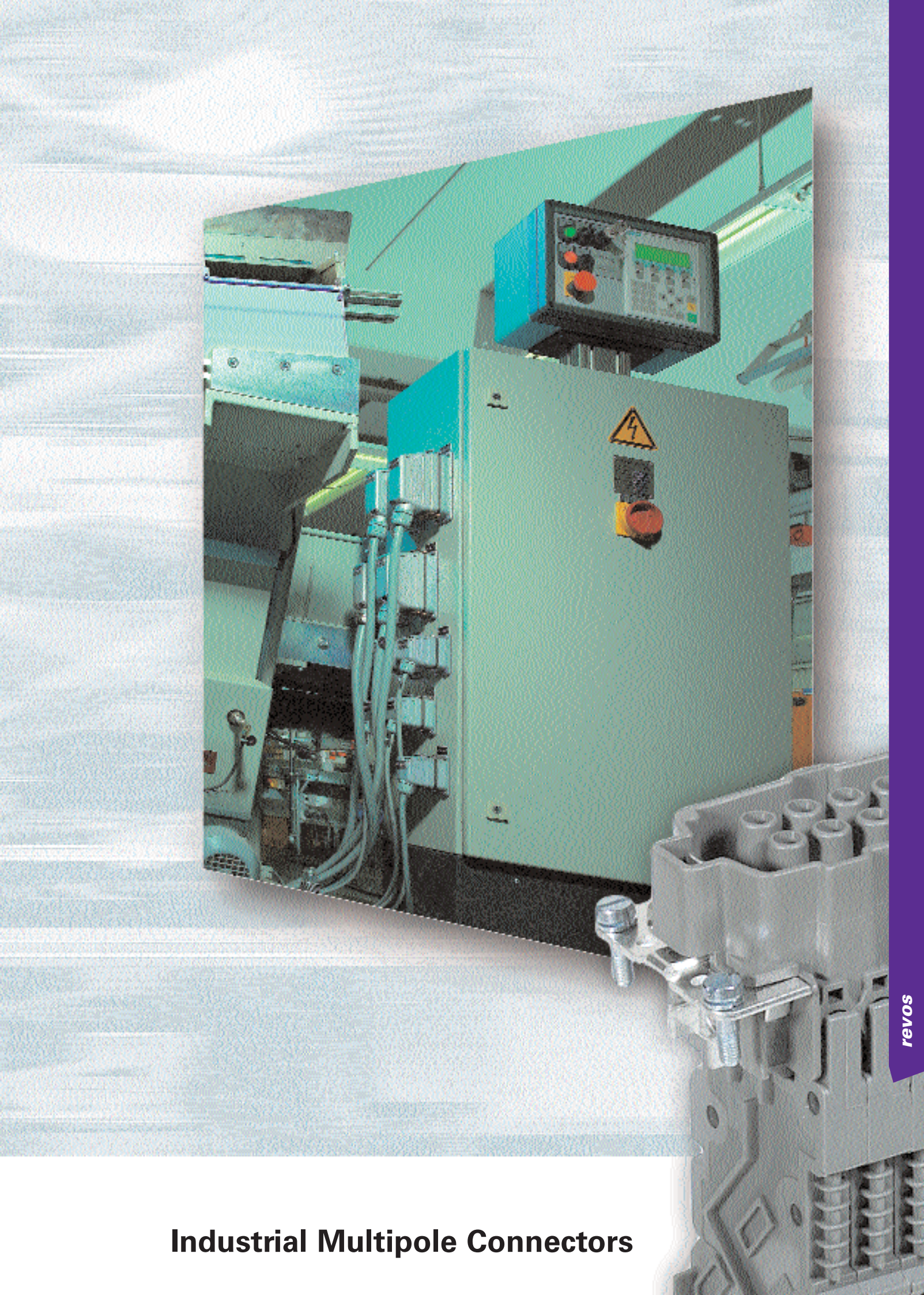

revos

Industrial Multipole Connectors

Industrial Multipole Connectors
Female/male inserts and multipole adapter

revos BASIC

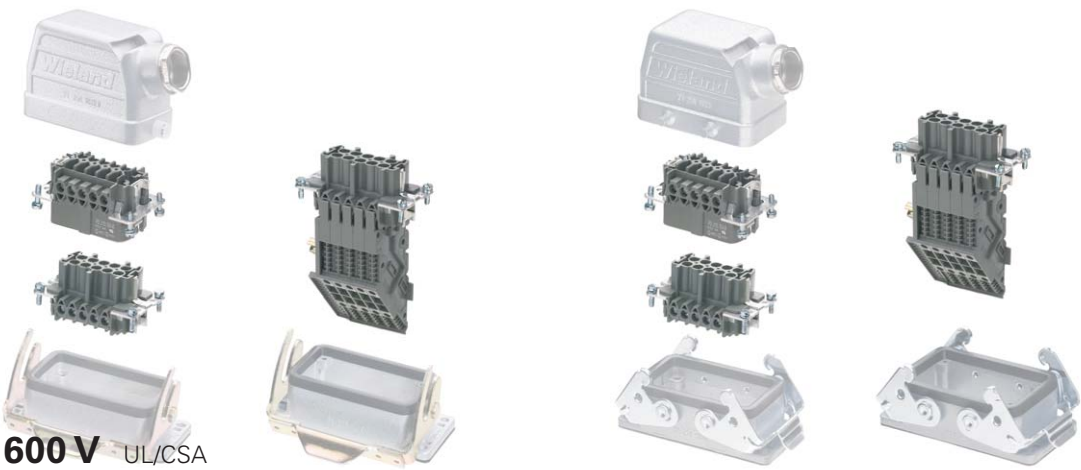

600 V UL/CSA

690/400 V, 16 A IEC 61 984

		Rated current	Cross section	Approvals	Wire strip length	Contacts	Std. pack
Screw connection	Female insert	16 A	0.5 – 2.5 mm² 20 – 12 AWG		7 mm	tin-plated	10
	Male insert	16 A	0.5 – 2.5 mm² 20 – 12 AWG		7 mm	tin-plated	10
Screw connection Multipole adapter long design (6 marking fields)	Female insert, ground right 500 V IEC 61 984	16 A	0,5 – 4 mm² 20 – 12 AWG		12 mm	tin-plated	10
	Female insert, ground left	16 A	0.5 – 4 mm² 20 – 12 AWG		12 mm	tin-plated	10
	Male insert, ground right 500 V IEC 61 984	16 A	0.5 – 4 mm² 20 – 12 AWG		12 mm	tin-plated	10
	Male insert, ground left	16 A	0.5 – 4 mm² 20 – 12 AWG		12 mm	tin-plated	10
Screw connection Multipole adapter short design (4 marking fields)	Female insert, ground right 500 V IEC 61 984	16 A	0.5 – 4 mm² 20 – 12 AWG		12 mm	tin-plated	10
	Female insert, ground left	16 A	0.5 – 4 mm² 20 – 12 AWG		12 mm	tin-plated	10
	Male insert, ground right 500 V IEC 61 984	16 A	0.5 – 4 mm² 20 – 12 AWG		12 mm	tin-plated	10
	Male insert, ground left	16 A	0.5 – 4 mm² 20 – 12 AWG		12 mm	tin-plated	10
Spring connection Multipole adapter short design (6 marking fields)	Female insert, ground right 500 V IEC 61 984	16 A	0.5 – 2.5 mm² 20 – 12 AWG		9 mm	tin-plated	10
	Female insert, ground left	16 A	0.5 – 2.5 mm² 20 – 12 AWG		9 mm	tin-plated	10
	Male insert, ground right 500 V IEC 61 984	16 A	0.5 – 2.5 mm² 20 – 12 AWG		9 mm	tin-plated	10
	Male insert, ground left	16 A	0.5 – 2.5 mm² 20 – 12 AWG		9 mm	tin-plated	10

revos

3pole + ground	6pole + ground	10pole + ground	16pole + ground	20pole + ground 2 x 10pole + ground	26pole + ground 1 x 10pole + ground 1 x 16pole + ground	32pole + ground 2 x 16pole + ground
Part no.	Part no.	Part no.	Part no.	Part no.	Part no.	Part no.
70.400.0340.0	70.400.0640.0	70.400.1040.0	70.400.1640.0	70.400.2040.0	70.400.2640.0	70.400.3240.0
70.410.0340.0	70.410.0640.0	70.410.1040.0	70.410.1640.0	70.410.2040.0	70.410.2640.0	70.410.3240.0
Pole assignment 3pole + ground	**Pole assignment** 6pole + ground	**Pole assignment** 10pole + ground	**Pole assignment** 16pole + ground	**Pole assignment** 20pole + ground	**Pole assignment** 26pole + ground	**Pole assignment** 32pole + ground
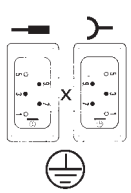	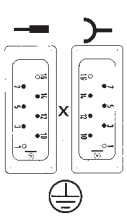	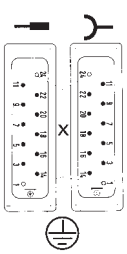	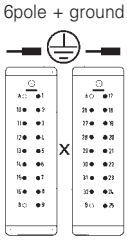	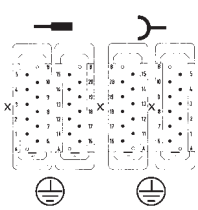	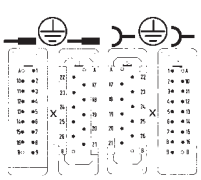	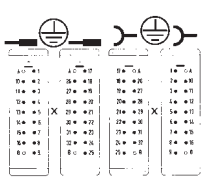
X = switching contacts (2 shortened male pins)						
70.125.0353.3 70.120.0353.3	70.125.0653.3 70.120.0653.3	70.125.1053.3 70.120.1053.3	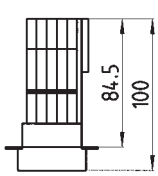			
70.135.0353.3 70.130.0353.3	70.135.0653.3 70.130.0653.3	70.135.1053.3 70.130.1053.3				
70.125.0353.4 70.120.0353.4	70.125.0653.4 70.120.0653.4	70.125.1053.4 70.120.1053.4	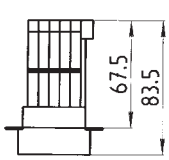			
70.135.0353.4 70.130.0353.4	70.135.0653.4 70.130.0653.4	70.135.1053.4 70.130.1053.4				
70.126.0353.0 70.121.0353.0	70.126.0653.0 70.121.0653.0	70.126.1053.0 70.121.1053.0	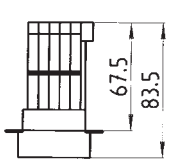			
70.136.0353.0 70.131.0353.0	70.136.0653.0 70.131.0653.0	70.136.1053.0 70.131.1053.0				

Industrial Multipole Connectors
Hoods with a single locking lever

revos BASIC

Hood type A

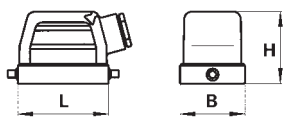

Hood type B

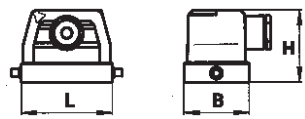

Hood type C

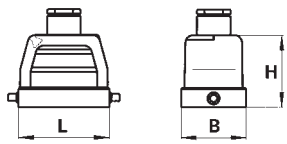

Degree of protection IP 55
Degree of protection IP 65 with matching cable glands (see accessories)

For inserts: **600 V** UL/CSA

For inserts: **690/400 V** IEC 61 984

Number of poles	Thread	Gland type	Dimensions in mm	L	W	H	Std. pack
Size **10** for connector **3pole + ground**	M 20	0 with cable gland 1 with threaded collar 2 with intermediate support 3 with strain relief		73	43	53	1
	M 25	0 with cable gland 1 with threaded collar 2 with intermediate support 3 with strain relief		73	43	53	
Size **16** for connector **6pole + ground**	M 25	0 with cable gland 1 with threaded collar 2 with intermediate support 3 with strain relief		93.5	43	60	1
	M 32	0 with cable gland 1 with threaded collar 2 with intermediate support 3 with strain relief		93.5	43	60	
Size **24** for connector **10-/ 16pole + ground**	M 25	0 with cable gland 1 with threaded collar 2 with intermediate support 3 with strain relief		120	43	70	1
	M 32	0 with cable gland 1 with threaded collar 2 with intermediate support 3 with strain relief		120	43	70	
Size **48** for connector **20-/26-/ 32pole + ground**	M 32	0 with cable gland 1 with threaded collar 2 with intermediate support 3 with strain relief		132	90	107	1
	M 40	1 with threaded collar 2 with intermediate support		132	90	107	1

revos

Hood Hood type A	Hood for 24pole = 2 x M 25 Hood type B	Hood Hood type C	
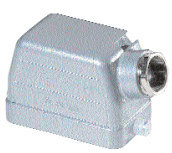			
Part no.	Part no.	Part no.	
77.350.1035.0 77.350.1035.1 77.350.1035.2 77.350.1035.3	77.351.1035.0 77.351.1035.1 77.351.1035.2 77.351.1035.3	77.352.1035.0 77.352.1035.1 77.352.1035.2 77.352.1035.3	
77.353.1035.0 77.353.1035.1 77.353.1035.2 77.353.1035.3		77.354.1035.0 77.354.1035.1 77.354.1035.2 77.354.1035.3	
77.350.1635.0 77.350.1635.1 77.350.1635.2 77.350.1635.3	77.351.1635.0 77.351.1635.1 77.351.1635.2 77.351.1635.3	77.352.1635.0 77.352.1635.1 77.352.1635.2 77.352.1635.3	
77.353.1635.0 77.353.1635.1 77.353.1635.2 77.353.1635.3		77.354.1635.0 77.354.1635.1 77.354.1635.2 77.354.1635.3	
77.350.2435.0 77.350.2435.1 77.350.2435.2 77.350.2435.3	77.351.2435.0 77.351.2435.1 77.351.2435.2 77.351.2435.3	77.352.2435.0 77.352.2435.1 77.352.2435.2 77.352.2435.3	
77.353.2435.0 77.353.2435.1 77.353.2435.2 77.353.2435.3		77.354.2435.0 77.354.2435.1 77.354.2435.2 77.354.2435.3	
70.350.4835.0 70.350.4835.1 70.350.4835.2 70.350.4835.3		70.352.4835.0 70.352.4835.1 70.352.4835.2 70.352.4835.3	
70.353.4835.1 70.353.4835.2		70.354.4835.1 70.354.4835.2	

Industrial Multipole Connectors
Housings with a single locking lever

revos BASIC

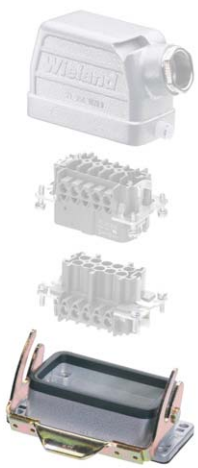

Housing type a

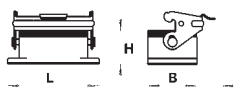

Housing type b

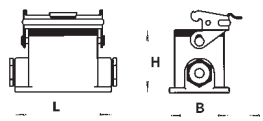

Housing type c

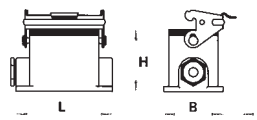

Housing type d

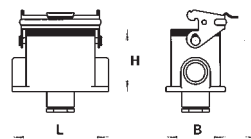

Housing type i

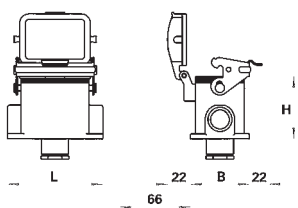

Degree of protection IP 55
Degree of protection IP 65 with matching cable glands (see accessories)

For inserts: **600 V** UL/CSA

For inserts: **690/400 V** IEC 61 984

Number of poles	Thread	Gland type	L	W	H	Std. pack	Housing open bottom Housing type a Part no.	Housing closed bottom with two cable glands Housing type b Part no.	Housing closed bottom with one cable gland on the left Housing type c Part no.
Size **10**			93	43	28	1	77.320.1028.0		
for connector	M 20	0 with cable gland	94	52	54.5	1		77.330.1035.0	77.331.1035.0
3pole + ground		1 with threaded collar	94	52	54.5	1		77.330.1035.1	77.331.1035.1
Size **16**			113	43	28	1	77.320.1628.0		
for connector	M 25	0 with cable gland	117	52	56.5	1		77.330.1635.0	77.331.1635.0
6pole + ground		1 with threaded collar	117	52	56.5	1		77.330.1635.1	77.331.1635.1
Size **24**			140	43	28	1	77.320.2428.0		
for connector	M 25	0 with cable gland	144	52	56.5	1		77.330.2435.0	77.331.2435.0
10pole + ground/ 16pole + ground		1 with threaded collar	144	52	56.5	1		77.330.2435.1	77.331.2435.1
Size **48**			165	90	44	1	70.320.4828.0		
for connector	M32	0 with cable gland	146	120	99	1			70.331.4835.0
20-/26-/ 32pole + ground		1 with threaded collar	146	120	99	1			70.331.4835.1
		3 with strain relief	146	120	99	1			70.331.4835.3
	M40	1 with threaded collar	146	120	99	1			

Mounting dimensions for open-bottom housings

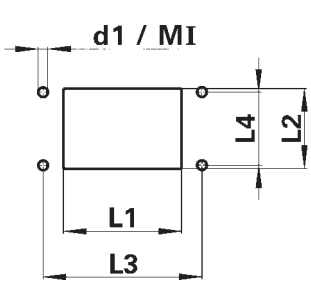

Housing size	Cut-out (mm)		Mounting holes (mm)			
	L1	L2	L3	L4	d1 (mm)	MI
10	65	35	83	32	4.3	M 4
16	85.5	35	103	32	4.3	M 4
24	112	35	130	32	4.3	M 4
48	117	81	148	70	6.4	M 6

revos

Housing type e

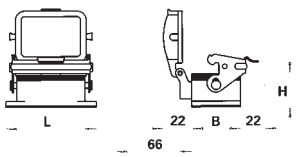

Housing type f

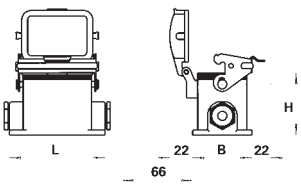

Housing type g

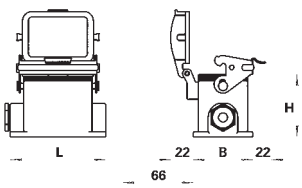

Housing type h

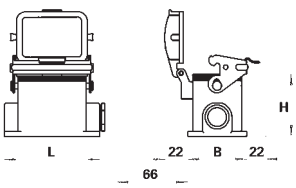

Housing closed bottom with cable gland at the bottom Housing type d	Housing open bottom with protective cover Housing type e	Housing closed bottom with two cable glands and protective cover Housing type f	Housing closed bottom with cable gland on the left and protective cover Housing type g	Housing closed bottom with cable gland on the right and protective cover Housing type h	Housing closed bottom with cable gland at the bottom and protective cover Housing type i
Part no.	Part no.	Part no.	Part no.	Part no.	Part no.
77.333.1035.0 77.333.1035.1	77.325.1028.0	77.340.1035.0 77.340.1035.1	77.341.1035.0 77.341.1035.1	77.342.1035.0 77.342.1035.1	77.343.1035.0 77.343.1035.1
77.333.1635.0 77.333.1635.1	77.325.1628.0	77.340.1635.0 77.340.1635.1	77.341.1635.0 77.341.1635.1	77.342.1635.0 77.342.1635.1	77.343.1635.0 77.343.1635.1
77.333.2435.0 77.333.2435.1	77.325.2428.0	77.340.2435.0 77.340.2435.1	77.341.2435.0 77.341.2435.1	77.342.2435.0 77.342.2435.1	77.343.2435.0 77.343.2435.1
	70.325.4828.0		70.341.4835.1 70.341.4835.3		
			70.344.4835.1		

Mounting dimensions for closed-bottom housings

Housing size	L5 (mm)	L6 (mm)	d2 (mm)	MII
10	82	40	5.5	M 5
16	105	45	5.5	M 5
24	132	45	5.5	M 5
48	111	106	6.5	M 6

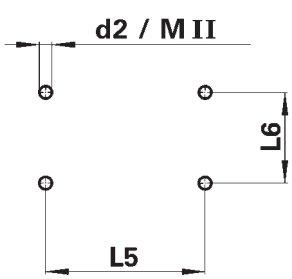

Industrial Multipole Connectors
Hoods with double locking levers

revos BASIC

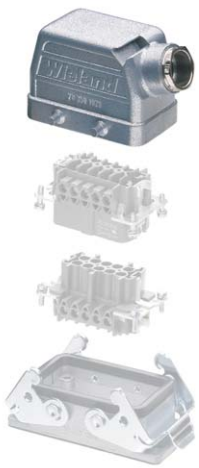

Hood type A

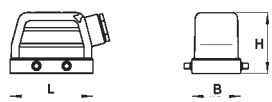

Hood type B

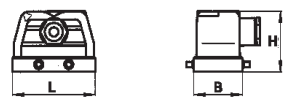

Hood type C

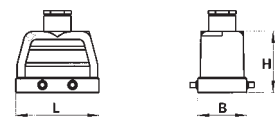

Degree of protection IP 55
Degree of protection IP 65 with matching cable glands

For inserts: **600 V** UL/CSA

For inserts: **690/400 V** IEC 61 984

Number of poles	Thread	Gland type	Dimensions in mm	L	W	H	Std. pack
Size **10** for connector **3pole + ground**	M 20	0 with cable gland 1 with threaded collar 2 with intermediate support 3 with strain relief		73	43	53	1
	M 25	0 with cable gland 1 with threaded collar 2 with intermediate support 3 with strain relief		73	43	53	
Size **16** for connector **6pole + ground**	M 25	0 with cable gland 1 with threaded collar 2 with intermediate support 3 with strain relief		93.5	43	60	1
	M 32	0 with cable gland 1 with threaded collar 2 with intermediate support 3 with strain relief		93.5	43	60	
Size **24** for connector **10-/** **16pole + ground**	M 25	0 with cable gland 1 with threaded collar 2 with intermediate support 3 with strain relief		120	43	70	1
	M 32	0 with cable gland 1 with threaded collar 2 with intermediate support 3 with strain relief		120	43	70	1

revos

Hood type D

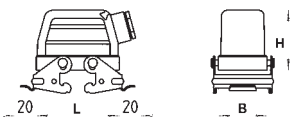

Hood type E

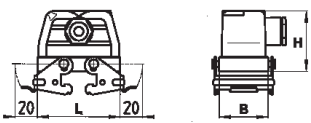

Hood type F

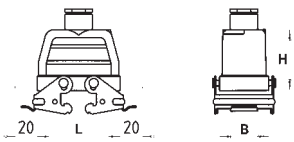

Hood Hood type A	Hood for 24pole = 2 x M 25 Hood type B	Hood Hood type C	Hood with locking levers Hood type D	Hood with locking levers for 24pole = 2 x M 25 Hood type E	Hood with locking levers Hood type F
Part no.	Part no.	Part no.	Part no.	Part no.	Part no.
72.350.1035.0 72.350.1035.1 72.350.1035.2 72.350.1035.3	72.351.1035.0 72.351.1035.1 72.351.1035.2 72.351.1035.3	72.352.1035.0 72.352.1035.1 72.352.1035.2 72.352.1035.3	72.355.1035.0 72.355.1035.1 72.355.1035.2 72.355.1035.3	72.356.1035.0 72.356.1035.1 72.356.1035.2 72.356.1035.3	72.357.1035.0 72.357.1035.1 72.357.1035.2 72.357.1035.3
72.353.1035.0 72.353.1035.1 72.353.1035.2 72.353.1035.3		72.354.1035.0 72.354.1035.1 72.354.1035.2 72.354.1035.3	72.358.1035.0 72.358.1035.1 72.358.1035.2 72.358.1035.3		72.359.1035.0 72.359.1035.1 72.359.1035.2 72.359.1035.3
72.350.1635.0 72.350.1635.1 72.350.1635.2 72.350.1635.3	72.351.1635.0 72.351.1635.1 72.351.1635.2 72.351.1635.3	72.352.1635.0 72.352.1635.1 72.352.1635.2 72.352.1635.3	72.355.1635.0 72.355.1635.1 72.355.1635.2 72.355.1635.3	72.356.1635.0 72.356.1635.1 72.356.1635.2 72.356.1635.3	72.357.1635.0 72.357.1635.1 72.357.1635.2 72.357.1635.3
72.353.1635.0 72.353.1635.1 72.353.1635.2 72.353.1635.3		72.354.1635.0 72.354.1635.1 72.354.1635.2 72.354.1635.3	72.358.1635.0 72.358.1635.1 72.358.1635.2 72.358.1635.3		72.359.1635.0 72.359.1635.1 72.359.1635.2 72.359.1635.3
72.350.2435.0 72.350.2435.1 72.350.2435.2 72.350.2435.3	72.351.2435.0 72.351.2435.1 72.351.2435.2 72.351.2435.3	72.352.2435.0 72.352.2435.1 72.352.2435.2 72.352.2435.3	72.355.2435.0 72.355.2435.1 72.355.2435.2 72.355.2435.3	72.356.2435.0 72.356.2435.1 72.356.2435.2 72.356.2435.3	72.357.2435.0 72.357.2435.1 72.357.2435.2 72.357.2435.3
72.353.2435.0 72.353.2435.1 72.353.2435.2 72.353.2435.3		72.354.2435.0 72.354.2435.1 72.354.2435.2 72.354.2435.3	72.358.2435.0 72.358.2435.1 72.358.2435.2 72.358.2435.3		72.359.2435.0 72.359.2435.1 72.359.2435.2 72.359.2435.3

Industrial Multipole Connectors
Housings with double locking levers

revos BASIC

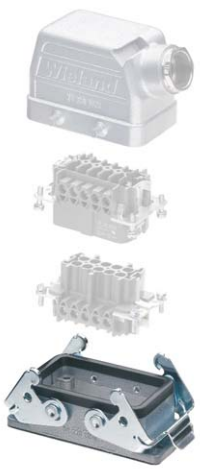

Hood type a

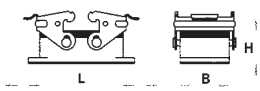

Hood type b

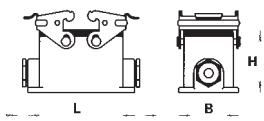

Hood type c

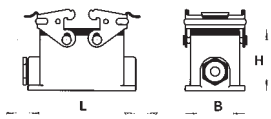

Hood type d

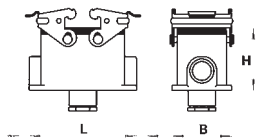

Hood type i

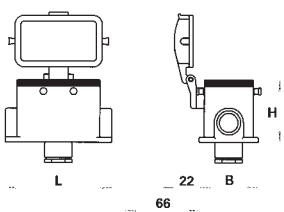

Degree of protection IP 55
Degree of protection IP 65 with matching cable glands (see accessories)

For inserts: **600 V** UL/CSA

For inserts: **690/400 V** IEC 61 984

Number of poles	Thread	Gland type	L	W	H	Std. pack	Housing open bottom Housing type a Part no.	Housing closed bottom with two cable glands Housing type b Part no.	Housing closed bottom with one cable gland on the left Housing type c Part no.
Size **10**			93	43	28	1	72.320.1028.0		
for connector	M 20	0 with cable gland	94	52	54.5	1		72.330.1035.0	72.331.1035.0
3pole + ground		1 with threaded collar	94	52	54.5	1		72.330.1035.1	72.331.1035.1
Size **16**			113	43	28	1	72.320.1628.0		
for connector	M 25	0 with cable gland	117	52	56.5	1		72.330.1635.0	72.331.1635.0
6pole + ground		1 with threaded collar	117	52	56.5	1		72.330.1635.1	72.331.1635.1
Size **24**			140	43	28	1	72.320.2428.0		
for connector	M 25	0 with cable gland	144	52	56.5	1		72.330.2435.0	72.331.2435.0
10-/ 16pole + ground		1 with threaded collar	144	52	56.5	1		72.330.2435.1	72.331.2435.1

Mounting dimensions for open-bottom housings

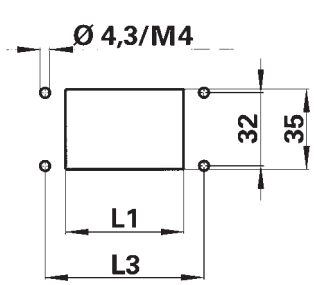

Housing size	L1 (mm)	L3 (mm)
10	65	83
16	85.5	103
24	112	130

revos

Hood type e

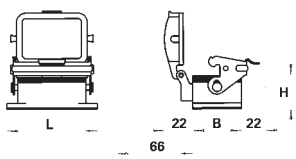

Hood type f

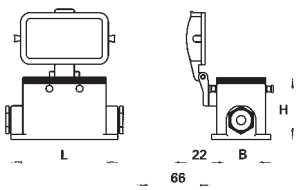

Hood type g

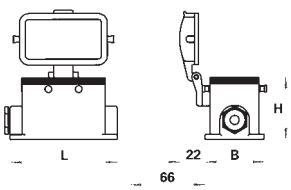

Hood type h

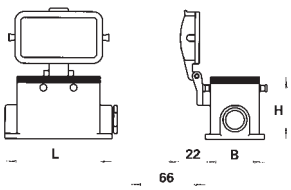

Housing closed bottom with cable gland at the bottom Housing type d	Housing open bottom with protective cover Housing type e	Housing closed bottom with two cable glands and protective cover Housing type f	Housing closed bottom with cable gland on the left and protective cover Housing type g	Housing closed bottom with cable gland on the right and protective cover Housing type h	Housing closed bottom with cable gland at the bottom and protective cover Housing type i
Part no.	Part no.	Part no.	Part no.	Part no.	Part no.
72.333.1035.0 72.333.1035.1	72.325.1028.0	72.340.1035.0 72.340.1035.1	72.341.1035.0 72.341.1035.1	72.342.1035.0 72.342.1035.1	72.343.1035.0 72.343.1035.1
72.333.1635.0 72.333.1635.1	72.325.1628.0	72.340.1635.0 72.340.1635.1	72.341.1635.0 72.341.1635.1	72.342.1635.0 72.342.1635.1	72.343.1635.0 72.343.1635.1
72.333.2435.0 72.333.2435.1	72.325.2428.0	72.340.2435.0 72.340.2435.1	72.341.2435.0 72.341.2435.1	72.342.2435.0 72.342.2435.1	72.343.2435.0 72.343.2435.1

Housing size	L5 (mm)	L6 (mm)
10	82	40
16	105	45
24	132	45

Mounting dimensions for closed-bottom housings

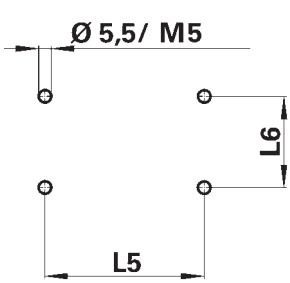

revos BASIC

Technical information

■ Approvals	UL, CSA, MEEI, SEV
■ Applicable standards	IEC 61 984
■ Contact inserts	
Rated current	16 A
Rated voltage	690 V
Nominal voltage accord. to UL	600 V
Nominal voltage accord. to CSA	600 V
Pole configurations	6-, 10-, 16-, 24-, 32 (2x16), 48 (2x24), + ground
Screw connection	0.5 – 2.5 mm^2 / 20 – 12 AWG
Crimp connection	0.5 – 4.0 mm^2 / 20 – 12 AWG
Degree of pollution	3
Temperature range	–40 to +110 °C
■ Multipole adapter	
Rated current	16 A
Rated voltage	500 V
Nominal voltage accord. to UL	600 V
Nominal voltage accord. to CSA	600 V
Pole configurations	6, 10, 16, 24, + ground
Screw connection	0.5 – 4.0 mm^2 / 20 – 12 AWG
Spring connection	0.5 – 2.5 mm^2 / 20 – 12 AWG
Degree of pollution	3
Temperature range	–40 to +110 °C
■ Contacts	
Material	copper alloy
Surface (screw, crimp, multipole adapter contacts)	tin-plated
Surface (crimp contacts)	gold-plated
Surface (crimp contacts)	silver-plated
■ Hoods and housings	
Material	die cast aluminum alloy
Surface	silver gray, silicon-free finish
Locking levers	zinc-plated steel
Gaskets	NBR
Temperature range	–40 to +110 °C
Degree of protection accord. to DIN EN 60 529	
with latched locking levers	IP 55
with appropriate cable gland	IP 65

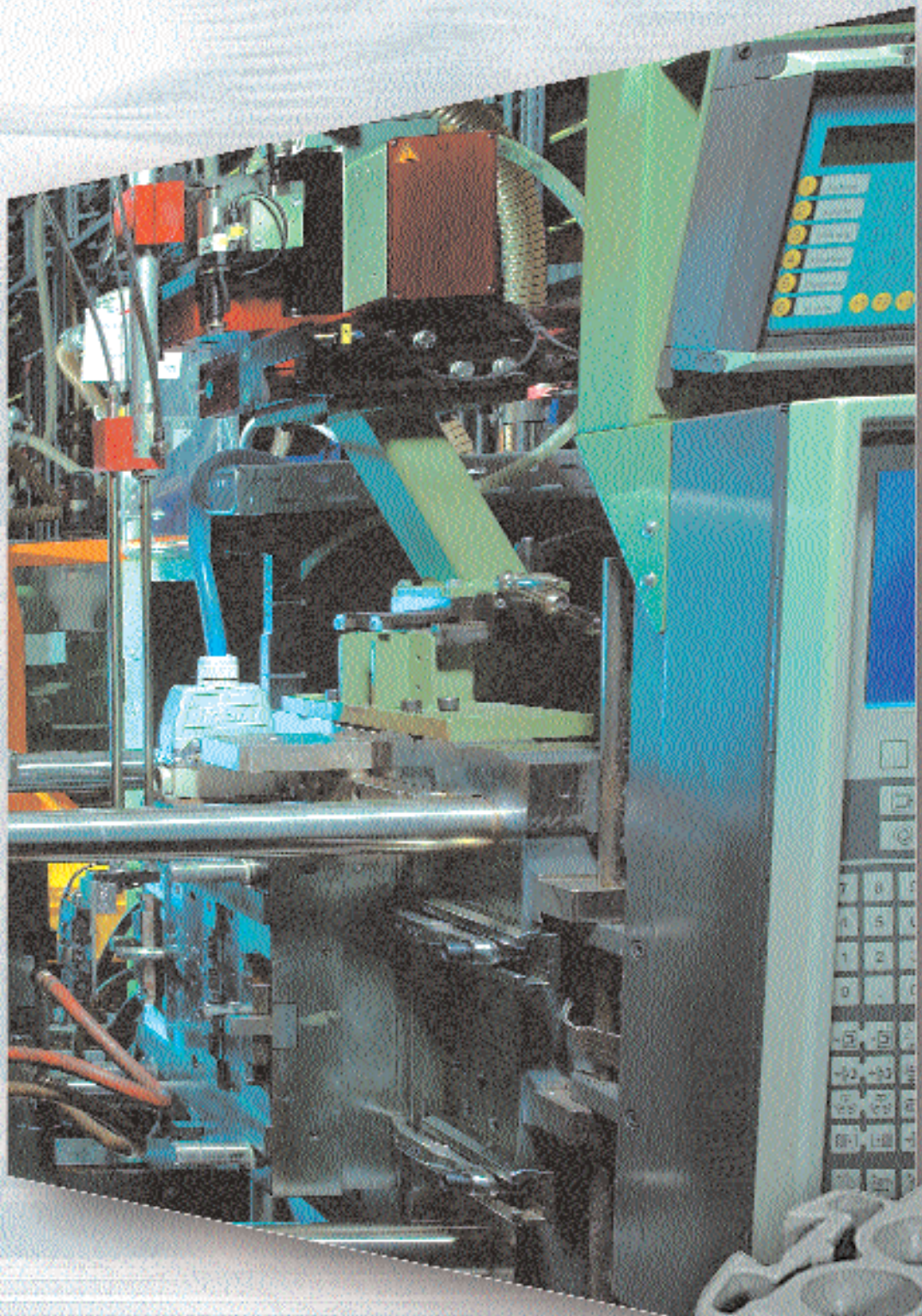

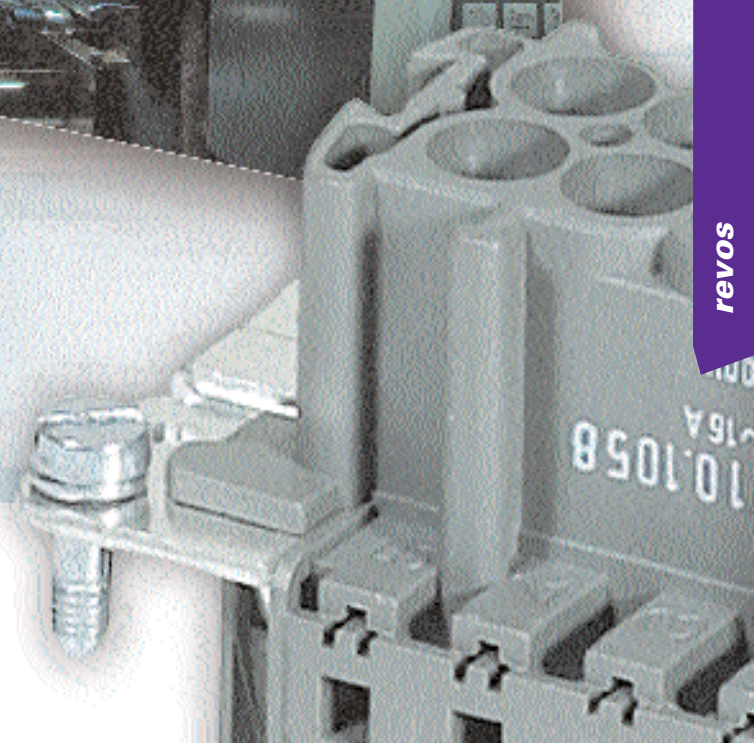

revos

Industrial Multipole Connectors

Industrial Multipole Connectors
Female/male inserts and multipole adapter

revos BASIC

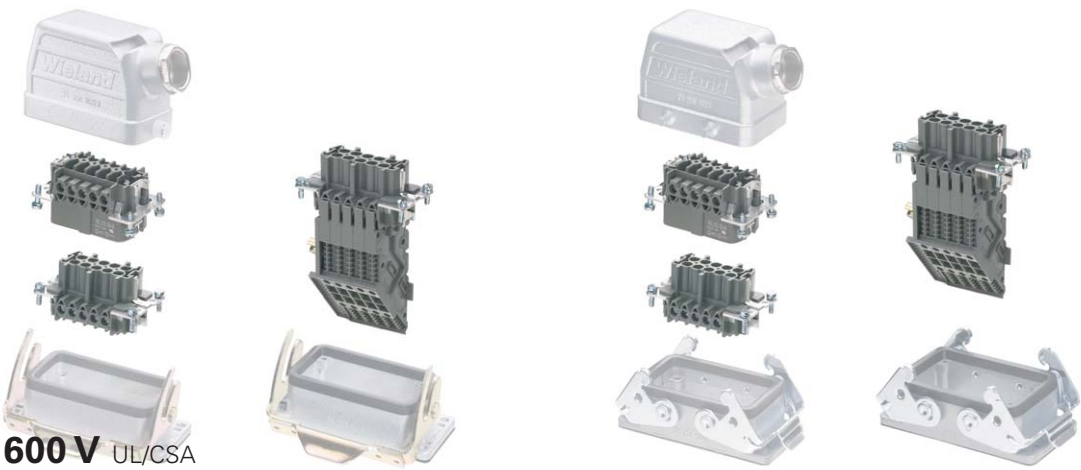

600 V UL/CSA

690 V, 16 A IEC 61 984

		Rated current	Cross section	Approvals	Wire strip length	Contacts	Std. pack
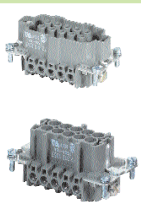 **Screw connection**	Female insert	16 A	0.5 – 2.5 mm² 20 – 12 AWG		7 mm	tin-plated	10
	Male insert	16 A	0.5 – 2.5 mm² 20 – 12 AWG		7 mm	tin-plated	10
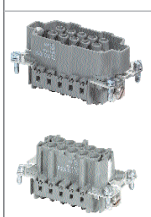 **Crimp connection**	Female insert without crimp contacts	16 A	0.5 – 4 mm² 20 – 12 AWG		7 mm	tin-plated	10
	Male insert without crimp contacts	16 A	0.5 – 4 mm² 20 – 12 AWG		7 mm	tin-plated	10
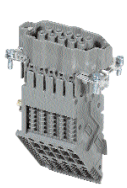 **Screw connection** Multipole adapter long design (6 marking fields)	Female insert, ground right	16 A/500 V	0.5 – 4 mm² 20 – 12 AWG		12 mm	tin-plated	10
	Female insert, ground left	16 A/500 V	0.5 – 4 mm² 20 – 12 AWG		12 mm	tin-plated	10
	Male insert, ground right	16 A/500 V	0.5 – 4 mm² 20 – 12 AWG		12 mm	tin-plated	10
	Male insert, ground left	16 A/500 V	0.5 – 4 mm² 20 – 12 AWG		12 mm	tin-plated	10
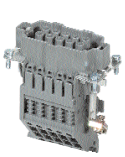 **Screw connection** Multipole adapter short design (4 marking fields)	Female insert, ground right	16 A/500 V	0.5 – 4 mm² 20 – 12 AWG		12 mm	tin-plated	10
	Female insert, ground left	16 A/500 V	0.5 – 4 mm² 20 – 12 AWG		12 mm	tin-plated	10
	Male insert, ground right	16 A/500 V	0.5 – 4 mm² 20 – 12 AWG		12 mm	tin-plated	10
	Male insert, ground left	16 A/500 V	0.5 – 4 mm² 20 – 12 AWG		12 mm	tin-plated	10
Spring connection Multipole adapter short design (6 marking fields)	Female insert, ground right	16 A/500 V	0.5 – 2.5 mm² 20 – 12 AWG		9 mm	tin-plated	10
	Female insert, ground left	16 A/500 V	0.5 – 2.5 mm² 20 – 12 AWG		9 mm	tin-plated	10
	Male insert, ground right	16 A/500 V	0.5 – 2.5 mm² 20 – 12 AWG		9 mm	tin-plated	10
	Male insert, ground left	16 A/500 V	0.5 – 2.5 mm² 20 – 12 AWG		9 mm	tin-plated	10

revos

Contacts for crimp version

Female contacts

Male contacts

gold-plated and silver-plated upon request

Cross section mm²		Part no.	Std. pack
		tin-plated	
0.5	20 AWG	02.123.7021.0	200
0.75 – 1	18 AWG	02.123.7121.0	200
1.5	16 AWG	02.123.7221.0	200
2.5	14 AWG	02.123.7321.0	200
4	12 AWG	02.123.7421.0	200
0.5	20 AWG	05.543.7021.0	200
0.75 – 1	18 AWG	05.543.7121.0	200
1.5	16 AWG	05.543.7221.0	200
2.5	14 AWG	05.543.7321.0	200
4	12 AWG	05.543.7421.0	200
Crimping tool		95.101.0800.0	1
Crimping die „B“		05.502.2100.0	1
Contact positioner „3“		05.502.3300.0	1
Extraction tool		05.502.3500.0	

Male switching contact
(2 pcs. required)

Cross section mm²		Part no.	Std. pack
0.5	20 AWG	05.543.9021.0	200
0.75 – 1	18 AWG	05.543.9121.0	200
1.5	16 AWG	05.543.9221.0	200
2.5	14 AWG	05.543.9321.0	200
4	12 AWG	05.543.9421.0	200

6pole + ground	10pole + ground	16pole + ground	24pole + ground	32pole + ground 2 inserts 1 – 16 poles 17 – 32 poles	48pole + ground 2 inserts 1 – 24 poles 25 – 48 poles
Part no.	Part no.	Part no.	Part no.	Part no.	Part no.
72.300.0653.0	72.300.1053.0	72.300.1653.0	72.300.2453.0	72.300.3253.0	72.300.4853.0
72.310.0653.0	72.310.1053.0	72.310.1653.0	72.310.2453.0	72.310.3253.0	72.310.4853.0
72.700.0658.0	72.700.1058.0	72.700.1658.0	72.700.2458.0	72.700.3258.0	72.700.4858.0
72.710.0658.0	72.710.1058.0	72.710.1658.0	72.710.2458.0	72.710.3258.0	72.710.4858.0

Pole assignment 6pole + ground

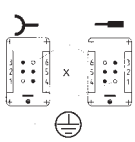

Pole assignment 10pole + ground

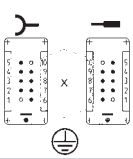

Pole assignment 16pole + ground

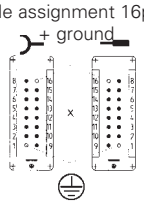

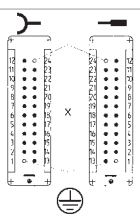

Pole assignment 24pole + ground

X = switching contacts (2 shortened male pins)

32pole: additional switching contacts 17 + 32
48pole: additional switching contacts 25 + 48

72.105.0653.0 72.100.0653.0	72.105.1053.0 72.100.1053.0	72.105.1653.0 72.100.1653.0	72.105.2453.0 72.100.2453.0	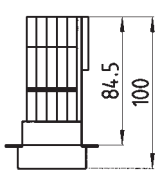
72.115.0653.0 72.110.0653.0	72.115.1053.0 72.110.1053.0	72.115.1653.0 72.110.1653.0	72.115.2453.0 72.110.2453.0	
72.105.0653.4 72.100.0653.4	72.105.1053.4 72.100.1053.4	72.105.1653.4 72.100.1653.4	72.105.2453.4 72.100.2453.4	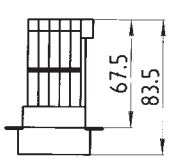
72.115.0653.4 72.110.0653.4	72.115.1053.4 72.110.1053.4	72.115.1653.4 72.110.1653.4	72.115.2453.4 72.110.2453.4	
72.106.0653.0 72.101.0653.0	72.106.1053.0 72.101.1053.0	72.106.1653.0 72.101.1653.0	72.106.2453.0 72.101.2453.0	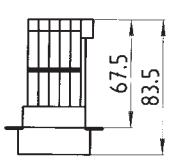
72.116.0653.0 72.111.0653.0	72.116.1053.0 72.111.1053.0	72.116.1653.0 72.111.1653.0	72.116.2453.0 72.111.2453.0	

Industrial Multipole Connectors
Hoods with a single locking lever

revos BASIC

Hood type A

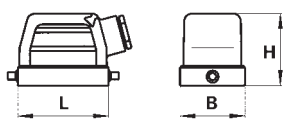

Hood type B

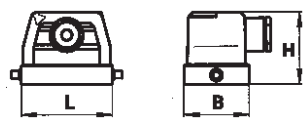

Hood type C

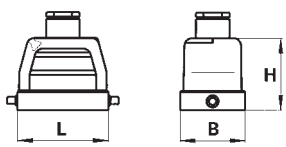

Degree of protection IP 55
Degree of protection IP 65 with matching cable glands (see accessories)

For inserts: **600 V** UL/CSA

For inserts: **690 V** IEC 61 984

Number of poles	Thread	Gland type	Dimensions in mm	L	W	H	Std. pack
Size **6** for connector **6pole + ground**	M 20	0 with cable gland 1 with threaded collar 2 with intermediate support 3 with strain relief		60	43	47.5	1
	M 25	0 with cable gland 1 with threaded collar 2 with intermediate support 3 with strain relief		60	43	47.5	
Size **10** for connector **10pole + ground**	M 20	0 with cable gland 1 with threaded collar 2 with intermediate support 3 with strain relief		73	43	53	1
	M 25	0 with cable gland 1 with threaded collar 2 with intermediate support 3 with strain relief		73	43	53	
Size **16** for connector **16pole + ground**	M 25	0 with cable gland 1 with threaded collar 2 with intermediate support 3 with strain relief		93,5	43	60	1
	M 32	0 with cable gland 1 with threaded collar 2 with intermediate support 3 with strain relief		93,5	43	60	
Size **24** for connector **24pole + ground**	M 25	0 with cable gland 1 with threaded collar 2 with intermediate support 3 with strain relief		120	43	70	1
	M 32	0 with cable gland 1 with threaded collar 2 with intermediate support 3 with strain relief		120	43	70	
Size **48** for connector **48pole + ground**	M32	0 with cable gland 1 with threaded collar 2 with intermediate support 3 with strain relief		132	90	107	1
	M40	1 with threaded collar 2 with intermediate support		132	90	107	1

revos

Hood Hood type A	Hood for 24pole = 2 x M 25 Hood type B	Hood Hood type C	
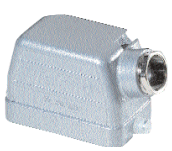			
Part no.	Part no.	Part no.	
72.350.0635.0 72.350.0635.1 72.350.0635.2 72.350.0635.3	72.351.0635.0 72.351.0635.1 72.351.0635.2 72.351.0635.3	72.352.0635.0 72.352.0635.1 72.352.0635.2 72.352.0635.3	
72.353.0635.0 72.353.0635.1 72.353.0635.2 72.353.0635.3		72.354.0635.0 72.354.0635.1 72.354.0635.2 72.354.0635.3	
77.350.1035.0 77.350.1035.1 77.350.1035.2 77.350.1035.3	77.351.1035.0 77.351.1035.1 77.351.1035.2 77.351.1035.3	77.352.1035.0 77.352.1035.1 77.352.1035.2 77.352.1035.3	
77.353.1035.0 77.353.1035.1 77.353.1035.2 77.353.1035.3		77.354.1035.0 77.354.1035.1 77.354.1035.2 77.354.1035.3	
77.350.1635.0 77.350.1635.1 77.350.1635.2 77.350.1635.3	77.351.1635.0 77.351.1635.1 77.351.1635.2 77.351.1635.3	77.352.1635.0 77.352.1635.1 77.352.1635.2 77.352.1635.3	
77.353.1635.0 77.353.1635.1 77.353.1635.2 77.353.1635.3		77.354.1635.0 77.354.1635.1 77.354.1635.2 77.354.1635.3	
77.350.2435.0 77.350.2435.1 77.350.2435.2 77.350.2435.3	77.351.2435.0 77.351.2435.1 77.351.2435.2 77.351.2435.3	77.352.2435.0 77.352.2435.1 77.352.2435.2 77.352.2435.3	
77.353.2435.0 77.353.2435.1 77.353.2435.2 77.353.2435.3		77.354.2435.0 77.354.2435.1 77.354.2435.2 77.354.2435.3	
70.350.4835.0 70.350.4835.1 70.350.4835.2 70.350.4835.3		70.352.4835.0 70.352.4835.1 70.352.4835.2 70.352.4835.3	
70.353.4835.1 70.353.4835.2		70.354.4835.1 70.354.4835.2	

Industrial Multipole Connectors
Housings with a single locking lever

revos BASIC

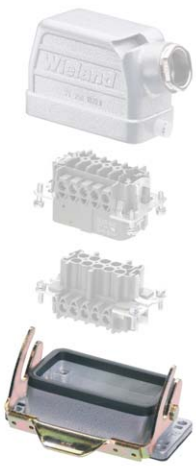

Housing type a

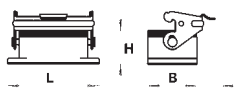

Housing type b

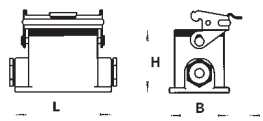

Housing type c

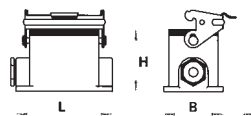

Housing type d

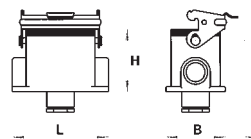

Housing type i

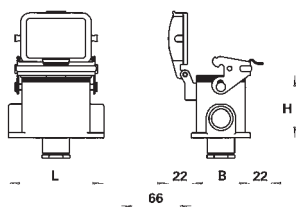

Degree of protection IP 55
Degree of protection IP 65 with matching cable glands

For inserts: **600 V** UL/CSA

For inserts: **690 V** IEC 61 984

Number of poles	Thread	Gland type	L	W	H	Std. pack	Housing open bottom Housing type a 	Housing closed bottom with two cable glands Housing type b 	Housing closed bottom with one cable gland on the left Housing type c
Size **6** for connector **6pole + ground**	M 20		80	43	28	1	72.320.0628.0		
		0 with cable gland	84	52	54.5	1		72.330.0635.0	72.331.0635.0
		1 with threaded collar	84	52	54.5	1		72.330.0635.1	72.331.0635.1
Size **10** for connector **10pole + ground**	M 20		93	43	28	1	77.320.1028.0		
		0 with cable gland	94	52	54.5	1		77.330.1035.0	77.331.1035.0
		1 with threaded collar	94	52	54.5	1		77.330.1035.1	77.331.1035.1
Size **16** for connector **16pole + ground**	M 25		113	43	28	1	77.320.1628.0		
		0 with cable gland	117	52	56.5	1		77.330.1635.0	77.331.1635.0
		1 with threaded collar	117	52	56.5	1		77.330.1635.1	77.331.1635.1
Size **24** for connector **24pole + ground**	M25		140	43	28	1	77.320.2428.0		
		0 with cable gland	144	52	56.5	1		77.330.2435.0	77.331.2435.0
		1 with threaded collar	144	52	56.5	1		77.330.2435.1	77.331.2435.1
Size **48** for connector **48pole + ground**	M32		165	90	44	1	70.320.4828.0		
		0 with cable gland	146	120	99	1			70.331.4835.0
		1 with threaded collar	146	120	99	1			70.331.4835.1
		3 with strain relief	146	120	99	1			70.331.4835.3
	M 40	1 with threaded collar	146	120	99	1			

Mounting dimensions for open-bottom housings

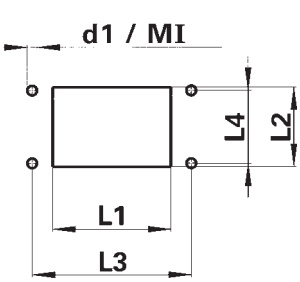

Housing size	Cut-out (mm)		Mounting holes (mm)			
	L1	L2	L3	L4	d1 (mm)	MI
6	52	35	70	32	4.3	M 4
10	65	35	83	32	4.3	M 4
16	85.5	35	103	32	4.3	M 4
24	112	35	130	32	4.3	M 4
48	117	81	148	70	6.4	M 6

revos

Housing type e

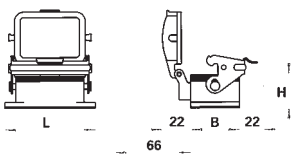

Housing type f

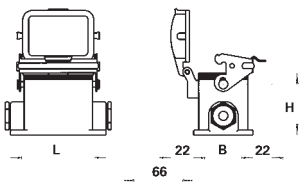

Housing type g

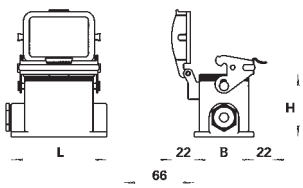

Housing type h

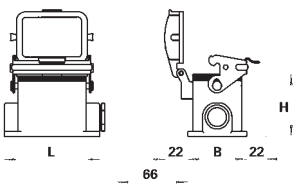

Housing closed bottom with cable gland at the bottom Housing type d	Housing open bottom with protective cover Housing type e	Housing closed bottom with two glands and protective cover Housing type f	Housing closed bottom with cable gland on the left and protective cover Housing type g	Housing closed bottom with cable gland on the right and protective cover Housing type h	Housing closed bottom with cable gland at the bottom and protective cover Housing type i
Part no.	Part no.	Part no.	Part no.	Part no.	Part no.
72.333.0635.0 72.333.0635.1	72.325.0628.0	72.340.0635.0 72.340.0635.1	72.341.0635.0 72.341.0635.1	72.342.0635.0 72.342.0635.1	72.343.0635.0 72.343.0635.1
77.333.1035.0 77.333.1035.1	77.325.1028.0	77.340.1035.0 77.340.1035.1	77.341.1035.0 77.341.1035.1	77.342.1035.0 77.342.1035.1	77.343.1035.0 77.343.1035.1
77.333.1635.0 77.333.1635.1	77.325.1628.0	77.340.1635.0 77.340.1635.1	77.341.1635.0 77.341.1635.1	77.342.1635.0 77.342.1635.1	77.343.1635.0 77.343.1635.1
77.333.2435.0 77.333.2435.1	77.325.2428.0	77.340.2435.0 77.340.2435.1	77.341.2435.0 77.341.2435.1	77.342.2435.0 77.342.2435.1	77.343.2435.0 77.343.2435.1
	70.325.4828.0		70.341.4835.1 70.341.4835.3		
			70.344.4835.1		

Mounting dimensions for closed-bottom housings

Mounting size	L5 (mm)	L6 (mm)	d2 (mm)	MII
6	70	40	5.5	M 5
10	82	40	5.5	M 5
16	105	45	5.5	M 5
24	132	45	5.5	M 5
48	111	106	6.5	M 6

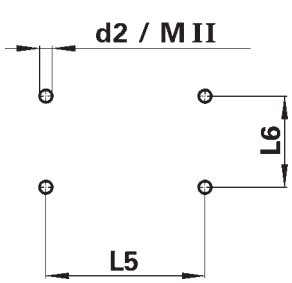

Industrial Multipole Connectors
Hoods with double locking levers

revos BASIC

Hood type A

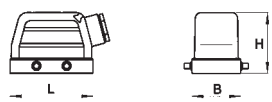

Hood type B

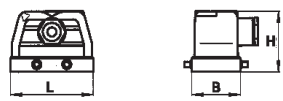

Hood type C

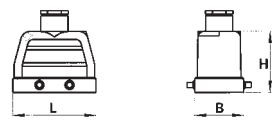

Degree of protection IP 55
Degree of protection IP 65 with matching cable glands (see accessories)

For inserts: **600 V** UL/CSA

For inserts: **690 V** IEC 61 984

Number of poles	Thread	Gland type	Dimensions in mm	L	W	H	Std. pack
Size **10** for connector **10pole + ground**	M 20	0 with cable gland 1 with threaded collar 2 with intermediate support 3 with strain relief		73	43	53	1
	M 25	0 with cable gland 1 with threaded collar 2 with intermediate support 3 with strain relief		73	43	53	
Size **16** for connector **16pole + ground**	M 25	0 with cable gland 1 with threaded collar 2 with intermediate support 3 with strain relief		93.5	43	60	1
	M 32	0 with cable gland 1 with threaded collar 2 with intermediate support 3 with strain relief		93.5	43	60	
Size **24** for connector **24pole + ground**	M 25	0 with cable gland 1 with threaded collar 2 with intermediate support 3 with strain relief		120	43	70	1
	M 32	0 with cable gland 1 with threaded collar 2 with intermediate support 3 with strain relief		120	43	70	1
Size **32** for connector **32pole + ground**	M 32	0 with cable gland 1 with threaded collar 2 with intermediate support 3 with strain relief		93.5	82.5	94	1
	M 40	1 with threaded collar 2 with intermediate support		93.5	82.5	94	1

revos

Hood type D

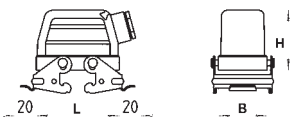

Hood type E

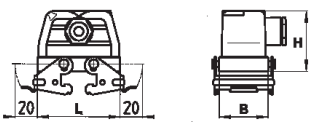

Hood type F

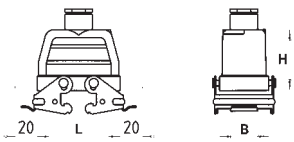

Hood	Hood for 24pole = 2 x M 25	Hood	Hood with locking levers	Hood with locking levers for 24pole = 2 x M 25	Hood with locking levers
Hood type A	Hood type B	Hood type C	Hood type D	Hood type E	Hood type F
Part no.	Part no.	Part no.	Part no.	Part no.	Part no.
72.350.1035.0 72.350.1035.1 72.350.1035.2 72.350.1035.3	72.351.1035.0 72.351.1035.1 72.351.1035.2 72.351.1035.3	72.352.1035.0 72.352.1035.1 72.352.1035.2 72.352.1035.3	72.355.1035.0 72.355.1035.1 72.355.1035.2 72.355.1035.3	72.356.1035.0 72.356.1035.1 72.356.1035.2 72.356.1035.3	72.357.1035.0 72.357.1035.1 72.357.1035.2 72.357.1035.3
72.353.1035.0 72.353.1035.1 72.353.1035.2 72.353.1035.3		72.354.1035.0 72.354.1035.1 72.354.1035.2 72.354.1035.3	72.358.1035.0 72.358.1035.1 72.358.1035.2 72.358.1035.3		72.359.1035.0 72.359.1035.1 72.359.1035.2 72.359.1035.3
72.350.1635.0 72.350.1635.1 72.350.1635.2 72.350.1635.3	72.351.1635.0 72.351.1635.1 72.351.1635.2 72.351.1635.3	72.352.1635.0 72.352.1635.1 72.352.1635.2 72.352.1635.3	72.355.1635.0 72.355.1635.1 72.355.1635.2 72.355.1635.3	72.356.1635.0 72.356.1635.1 72.356.1635.2 72.356.1635.3	72.357.1635.0 72.357.1635.1 72.357.1635.2 72.357.1635.3
72.353.1635.0 72.353.1635.1 72.353.1635.2 72.353.1635.3		72.354.1635.0 72.354.1635.1 72.354.1635.2 72.354.1635.3	72.358.1635.0 72.358.1635.1 72.358.1635.2 72.358.1635.3		72.359.1635.0 72.359.1635.1 72.359.1635.2 72.359.1635.3
72.350.2435.0 72.350.2435.1 72.350.2435.2 72.350.2435.3	72.351.2435.0 72.351.2435.1 72.351.2435.2 72.351.2435.3	72.352.2435.0 72.352.2435.1 72.352.2435.2 72.352.2435.3	72.355.2435.0 72.355.2435.1 72.355.2435.2 72.355.2435.3	72.356.2435.0 72.356.2435.1 72.356.2435.2 72.356.2435.3	72.357.2435.0 72.357.2435.1 72.357.2435.2 72.357.2435.3
72.353.2435.0 72.353.2435.1 72.353.2435.2 72.353.2435.3		72.354.2435.0 72.354.2435.1 72.354.2435.2 72.354.2435.3	72.358.2435.0 72.358.2435.1 72.358.2435.2 72.358.2435.3		72.359.2435.0 72.359.2435.1 72.359.2435.2 72.359.2435.3
70.350.3235.0 70.350.3235.1 70.350.3235.2 70.350.3235.3		70.352.3235.0 70.352.3235.1 70.352.3235.2 70.352.3235.3			
70.353.3235.1 70.353.3235.2		70.354.3235.1 70.354.3235.2			

Industrial Multipole Connectors
Housings with double locking levers

revos BASIC

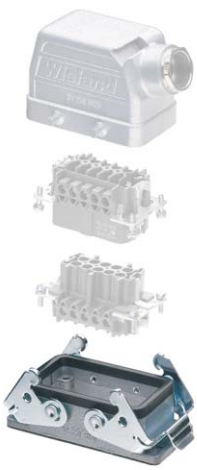

Hood type a

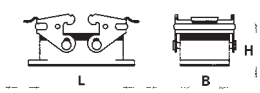

Hood type b

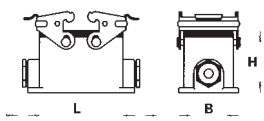

Hood type c

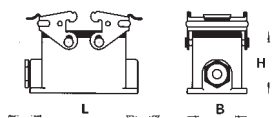

Hood type d

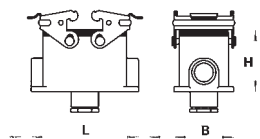

Housing type i

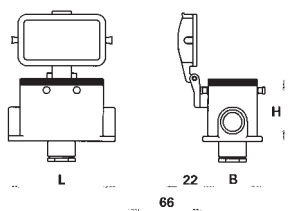

Housing open bottom

Housing type a

Housing closed bottom with two cable glands

Housing type b

Housing closed bottom with one cable gland on the left

Housing type c

Degree of protection IP 55
Degree of protection IP 65 with matching cable glands (see accessories)

For inserts: **600 V** UL/CSA

For inserts: **690 V** IEC 61 984

Number of poles	Thread	Gland type	L	W	H	Std. pack	Part no.	Part no.	Part no.
Size **10**			93	43	28	1	72.320.1028.0		
for connector	M 20	0 with cable gland	94	52	54.5	1		72.330.1035.0	72.331.1035.0
10pole + ground		1 with threaded collar	94	52	54.5	1		72.330.1035.1	72.331.1035.1
Size **16**			113	43	28	1	72.320.1628.0		
for connector	M 25	0 with cable gland	117	52	56.5	1		72.330.1635.0	72.331.1635.0
16pole + ground		1 with threaded collar	117	52	56.5	1		72.330.1635.1	72.331.1635.1
Size **24**			140	43	28	1	72.320.2428.0		
for connector	M 25	0 with cable gland	144	52	56.5	1		72.330.2435.0	72.331.2435.0
24pole + ground		1 with threaded collar	144	52	56.5	1		72.330.2435.1	72.331.2435.1
Size **32** for connector **32pole + ground**			124	84	35	1	70.320.3228.0		

Mounting dimensions for open-bottom housings

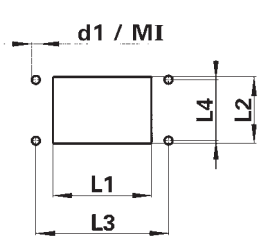

Housing size	Cut-out (mm)		Mounting holes (mm)			
	L1	L2	L3	L4	d1 (mm)	MI
10	65	35	83	32	4.3	M 4
16	85.5	35	103	32	4.3	M 4
24	112	35	130	32	4.3	M 4
32	117	81	148	70	6.4	M 6

revos

Hood type e	Housing type f	Housing type g	Housing type h

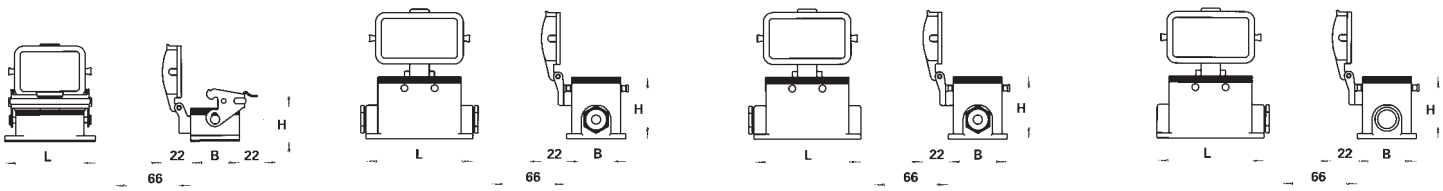

Housing closed bottom with cable gland at the bottom	Housing open bottom with protective cover	Housing closed bottom with two glands and protective cover	Housing closed bottom with cable gland on the left and protective cover	Housing closed bottom with cable gland on the right and protective cover	Housing closed bottom with cable gland at the bottom and protective cover
Housing type d	Housing type e	Housing type f	Housing type g	Housing type h	Housing type i
Part no.	Part no.	Part no.	Part no.	Part no.	Part no.
72.333.1035.0 72.333.1035.1	70.325.1028.0	72.340.1035.0 72.340.1035.1	72.341.1035.0 72.341.1035.1	72.342.1035.0 72.342.1035.1	72.343.1035.0 72.343.1035.1
72.333.1635.0 72.333.1635.1	70.325.1628.0	72.340.1635.0 72.340.1635.1	72.341.1635.0 72.341.1635.1	72.342.1635.0 72.342.1635.1	72.343.1635.0 72.343.1635.1
72.333.2435.0 72.333.2435.1	70.325.2428.0	72.340.2435.0 72.340.2435.1	72.341.2435.0 72.341.2435.1	72.342.2435.0 72.342.2435.1	72.343.2435.0 72.343.2435.1

Mounting dimensions for closed-bottom housings

Housing size	L5 (mm)	L6 (mm)
10	82	40
16	105	45
24	132	45

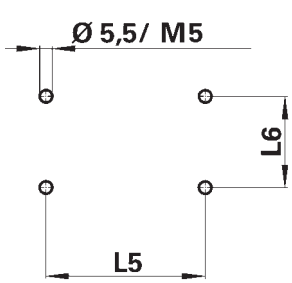

Industrial multipole connectors
Multiple multipole connectors

revos BASIC

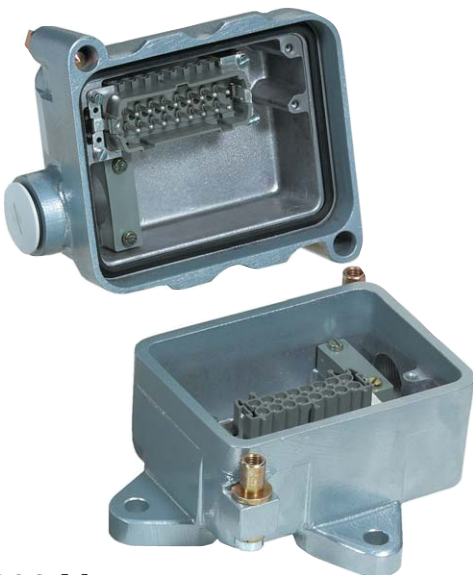

600 V UL/CSA

500 V, 16 A IEC 61 984

16pole and 24pole + ground

Degree of protection:
IP 65 with the appropriate cable glands

	Number of poles	Cable entry side	Thread	Part no.	Stand. pack
Housing		narrow side	M 25	75.900.0035.0	1
Hood		narrow side	M 25	75.900.0135.0	1
Female insert	16pole + ground			70.300.1640.0	10
Male insert	16pole + ground			70.310.1640.0	10
Female insert	24pole + ground			70.300.2440.0	10
Male insert	24pole + ground			70.310.2440.0	10
Housing with female insert	16pole	narrow side	M 25	75.931.1635.0	1
Housing with female insert	16pole	bottom	M 25	75.933.1635.0	1
Housing with male insert	16pole	narrow side	M 25	75.941.1635.0	1
Hood with male insert	16pole	narrow side	M 25	75.950.1635.0	1
Hood with female insert	16pole	narrow side	M 25	75.960.1635.0	1
Housing with female insert	24pole	narrow side	M 25	75.931.2435.0	1
Housing with female insert	24pole	bottom	M 25	75.933.2435.0	1
Housing with female insert	24pole	bottom/narrow side	M 25	75.934.2435.0	
Housing with male insert	24pole	narrow side	M 25	75.941.2435.0	1
Hood with male insert	24pole	narrow side	M 25	75.950.2435.0	1
Hood with female insert	24pole	narrow side	M 25	75.960.2435.0	1

Housings: are delivered with M 25 threads
With bottom entry threads, the side entry is sealed with a locking piece

Hoods: are delivered with M25 threads and preassembled locking piece

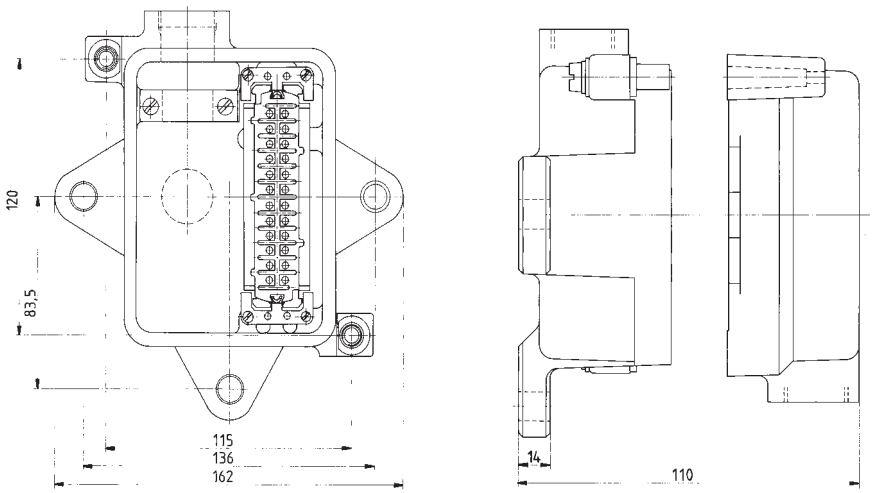
120
83,5
115
136
162
14
110

Industrial multipole connectors, sets of 2 components
Housing with multipole adapter with single and double locking levers

revos BASIC

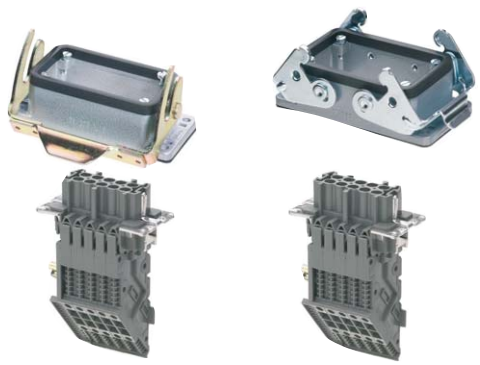

600 V UL/CSA

500 V, 16 A IEC 61 984

			Cross section	Approvals	Wire strip length	Stand. pack
Single locking lever	**Screw connection** Housing with multipole adapter, long design(6 marking fields), mounting from the rear, Multipole adapter in the housing, unassembled	Multipole adapter in the housing Single locking lever Female adapter insert, ground right Female adapter insert, ground left Male adapter insert, ground right Male adapter insert, ground left	0.5 – 4 mm² 20 – 12 AWG		12 mm 12 mm 12 mm 12 mm	10 10 10 10
Single locking lever	**Screw connection** Housing with multipole adapter, short design (4 markingfields), mounting fromthe rear, Multipole adapterin the housing, unassembled	Multipole adapter in the housing Single locking lever Female adapter insert, ground right Female adapter insert, ground left Male adapter insert, ground right Male adapter insert, ground left	0.5 – 4 mm² 20 – 12 AWG		12 mm 12 mm 12 mm 12 mm	10 10 10 10
Double locking lever	**Screw connection** Housing with multipole adapter, long design (6 marking fields), mounting from the rear, Multipole adapter in the housing, unassembled	Multipole adapter in the housing Double locking lever Female adapter insert, ground right Female adapter insert, ground left Male adapter insert, ground right Male adapter insert, ground left	0.5 – 4 mm² 20 – 12 AWG		12 mm 12 mm 12 mm 12 mm	10 10 10 10
Double locking lever	**Screw connection** Housing with multipole adapter, short design (4 markingfields), mounting fromthe rear, Multipole adapterin the housing, unassembled	Multipole adapter in the housing Double locking lever Female adapter insert, ground right Female adapter insert, ground left Male adapter insert, ground right Male adapter insert, ground left	0.5 – 4 mm² 20 – 12 AWG		12 mm 12 mm 12 mm 12 mm	10 10 10 10

revos

6pole + ground	10pole + ground	16pole + ground	24pole + ground	
Part no.	Part no.	Part no.	Part no.	
70.945.0653.3 70.940.0653.3 70.955.0653.3 70.950.0653.3	71.945.1053.3 71.940.1053.3 71.955.1053.3 71.950.1053.3	71.945.1653.3 71.940.1653.3 71.955.1653.3 71.950.1653.3	71.945.2453.3 71.940.2453.3 71.955.2453.3 71.950.2453.3	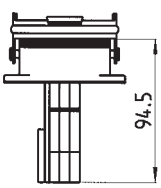 For hoods see page 633
70.945.0653.4 70.940.0653.4 70.955.0653.4 70.950.0653.4	71.945.1053.4 71.940.1053.4 71.955.1053.4 71.950.1053.4	71.945.1653.4 71.940.1653.4 71.955.1653.4 71.950.1653.4	71.945.2453.4 71.940.2453.4 71.955.2453.4 71.950.2453.4	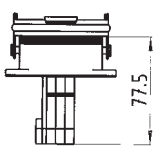 For hoods see page 633
	70.945.1053.3 70.940.1053.3 70.955.1053.3 70.950.1053.3	70.945.1653.3 70.940.1653.3 70.955.1653.3 70.950.1653.3	70.945.2453.3 70.940.2453.3 70.955.2453.3 70.950.2453.3	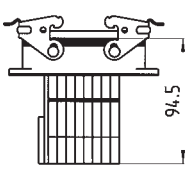 For hoods see page 636
	70.945.1053.4 70.940.1053.4 70.955.1053.4 70.950.1053.4	70.945.1653.4 70.940.1653.4 70.955.1653.4 70.950.1653.4	70.945.2453.4 70.940.2453.4 70.955.2453.4 70.950.2453.4	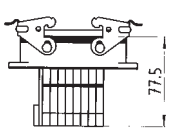 For hoods see page 636
				For inserts and multipole adapters see page 630

Industrial multipole connectors, sets of 2 components
Housing with multipole adapter with single and double locking levers

revos BASIC

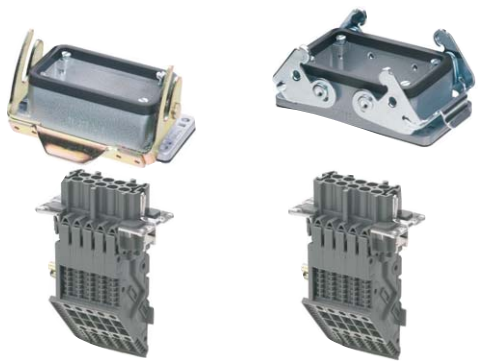

600 V UL/CSA

500 V, 16 A IEC 61 984

			Cross section	Approvals	Wire strip length	Stand. pack
Single locking lever	**Screw connection** Housing with multipole adapter, long design (6 marking fields), mounting from the rear, Multipole adapter in the housing, unassembled	Multipole adapter in the housing **Single locking lever** Female adapter insert, ground right Female adapter insert, ground left Male adapter insert, ground right Male adapter insert, ground left	0.5 – 4 mm² 20 – 12 AWG		 12 mm 12 mm 12 mm 12 mm	 10 10 10 10
Single locking lever	**Screw connection** Housing with multipole adapter, short design (4 markingfields), mounting fromthe rear, Multipole adapterin the housing, unassembled	Multipole adapter in the housing **Single locking lever** Female adapter insert, ground right Female adapter insert, ground left Male adapter insert, ground right Male adapter insert, ground left	0.5 – 4 mm² 20 – 12 AWG		 12 mm 12 mm 12 mm 12 mm	 10 10 10 10
Double locking lever	**Screw connection** Housing with multipole adapter, long design (6 marking fields), mounting from the rear, Multipole adapter in the housing, unassembled	Multipole adapter in the housing **Double locking lever** Female adapter insert, ground right Female adapter insert, ground left Male adapter insert, ground right Male adapter insert, ground left	0.5 – 4 mm² 20 – 12 AWG		 12 mm 12 mm 12 mm 12 mm	 10 10 10 10
Double locking lever	**Screw connection** Housing with multipole adapter, short design (4 markingfields), mounting fromthe rear, Multipole adapterin the housing, unassembled	Multipole adapter in the housing **Double locking lever** Female adapter insert, ground right Female adapter insert, ground left Male adapter insert, ground right Male adapter insert, ground left	0.5 – 4 mm² 20 – 12 AWG		 12 mm 12 mm 12 mm 12 mm	 10 10 10 10

revos

6pole + ground	10pole + ground	16pole + ground	24pole + ground	
Part no.	Part no.	Part no.	Part no.	
72.945.0653.0 72.940.0653.0 72.955.0653.0 72.950.0653.0	77.945.1053.0 77.940.1053.0 77.955.1053.0 77.950.1053.0	77.945.1653.0 77.940.1653.0 77.955.1653.0 77.950.1653.0	77.945.2453.0 77.940.2453.0 77.955.2453.0 77.950.2453.0	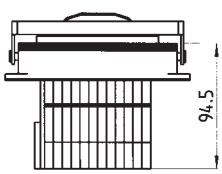 For hoods see page 656
72.945.0653.4 72.940.0653.4 72.955.0653.4 72.950.0653.4	77.945.1053.4 77.940.1053.4 77.955.1053.4 77.950.1053.4	77.945.1653.4 77.940.1653.4 77.955.1653.4 77.950.1653.4	77.945.2453.4 77.940.2453.4 77.955.2453.4 77.950.2453.4	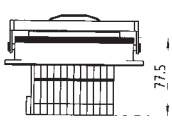 For hoods see page 656
	72.945.1053.0 72.940.1053.0 72.955.1053.0 72.950.1053.0	72.945.1653.0 72.940.1653.0 72.955.1653.0 72.950.1653.0	72.945.2453.0 72.940.2453.0 72.955.2453.0 72.950.2453.0	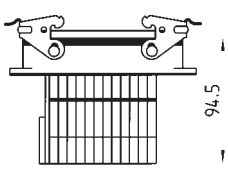 For hoods see page 660
	72.945.1053.4 72.940.1053.4 72.955.1053.4 72.950.1053.4	72.945.1653.4 72.940.1653.4 72.955.1653.4 72.950.1653.4	72.945.2453.4 72.940.2453.4 72.955.2453.4 72.950.2453.4	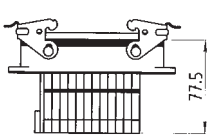 For hoods see page 660
Pole configuration 6pole + ground 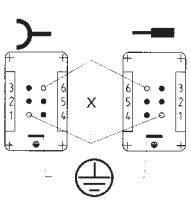	Pole assignment 10pole + ground 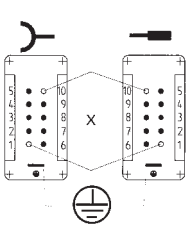	Pole assignment 16pole + ground 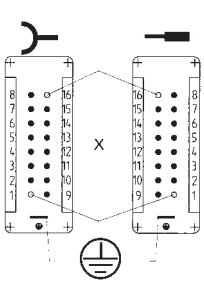	Pole assignment 24pole + ground 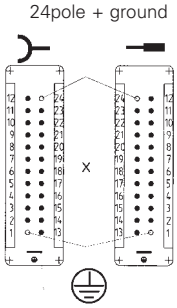	For inserts and multipole adapters see page 654 X = switching contacts (2 shortened male pins)

Industrial multipole connectors, sets of 2 components
Housing with multipole adapter with single and double locking levers

revos BASIC

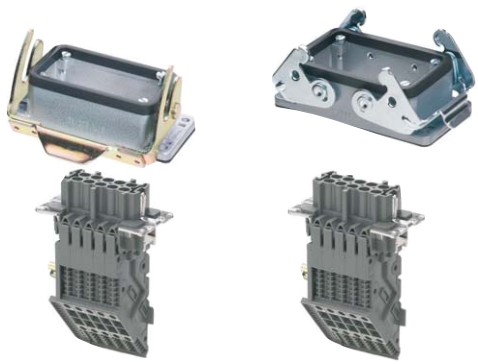

600 V UL/CSA

690 V/400 V, 16 A IEC 61 984

			Cross section	Approvals	Wire strip length	Stand. pack
Single locking lever	**Screw connection** Housing with multipole adapter, long design (6 marking fields), mounting from the rear, Multipole adapter in the housing, unassembled	Multipole adapter in the housing **Single locking lever** Female adapter insert, ground right Female adapter insert, ground left Male adapter insert, ground right Male adapter insert, ground left	0.5 – 4 mm² 20 – 12 AWG		 12 mm 12 mm 12 mm 12 mm	 10 10 10 10
Single locking lever	**Screw connection** Housing with multipole adapter, short design (4 markingfields), mounting fromthe rear, Multipole adapterin the housing, unassembled	Multipole adapter in the housing **Single locking lever** Female adapter insert, ground right Female adapter insert, ground left Male adapter insert, ground right Male adapter insert, ground left	0.5 – 4 mm² 20 – 12 AWG		 12 mm 12 mm 12 mm 12 mm	 10 10 10 10
Double locking lever	**Screw connection** Housing with multipole adapter, long design (6 marking fields), mounting from the rear, Multipole adapter in the housing, unassembled	Multipole adapter in the housing **Double locking lever** Female adapter insert, ground right Female adapter insert, ground left Male adapter insert, ground right Male adapter insert, ground left	0.5 – 4 mm² 20 – 12 AWG		 12 mm 12 mm 12 mm 12 mm	 10 10 10 10
Double locking lever	**Screw connection** Housing with multipole adapter, short design (4 markingfields), mounting fromthe rear, Multipole adapterin the housing, unassembled	Multipole adapter in the housing **Double locking lever** Female adapter insert, ground right Female adapter insert, ground left Male adapter insert, ground right Male adapter insert, ground left	0.5 – 4 mm² 20 – 12 AWG		 12 mm 12 mm 12 mm 12 mm	 10 10 10 10

revos

3pole + ground	6pole + ground	10pole + ground	
Part no.	Part no.	Part no.	
71.965.0353.3 71.960.0353.3 71.975.0353.3 71.970.0353.3	71.965.0653.3 71.960.0653.3 71.975.0653.3 71.970.0653.3	71.965.1053.3 71.960.1053.3 71.975.1053.3 71.970.1053.3	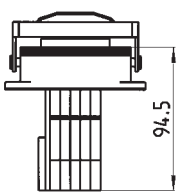 For hoods see page 644
71.965.0353.4 71.960.0353.4 71.975.0353.4 71.970.0353.4	71.965.0653.4 71.960.0653.4 71.975.0653.4 71.970.0653.4	71.965.1053.4 71.960.1053.4 71.975.1053.4 71.970.1053.4	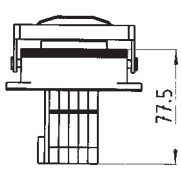 For hoods see page 644
70.965.0353.3 70.960.0353.3 70.975.0353.3 70.970.0353.3	70.965.0653.3 70.960.0653.3 70.975.0653.3 70.970.0653.3	70.965.1053.3 70.960.1053.3 70.975.1053.3 70.970.1053.3	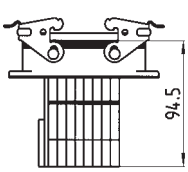 For hoods see page 648
70.965.0353.4 70.960.0353.4 70.975.0353.4 70.970.0353.4	70.965.0653.4 70.960.0653.4 70.975.0653.4 70.970.0653.4	70.965.1053.4 70.960.1053.4 70.975.1053.4 70.970.1053.4	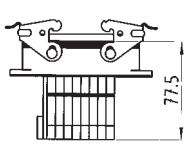 For hoods see page 648
Pole assignment 3pole + ground 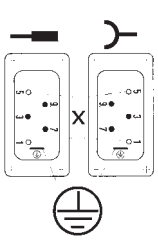	Pole assignment 6pole + ground 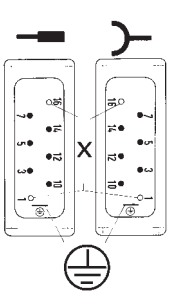	Pole assignment 10pole + ground 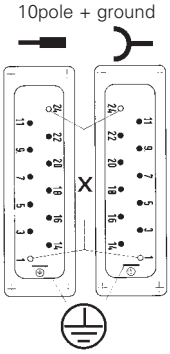	For inserts and multipole adapters see page 642 X = switching contacts (2 shortened male pins)

Industrial multipole connectors, sets of 4 components with double locking levers

revos BASIC

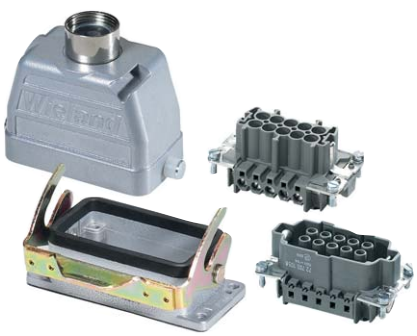

600 V UL/CSA

500 V, 16 A IEC 61 984

Hood/housing size	Number of poles	Thread	Stand. pack	Part no.	Female insert **Screw connection** **70.300.xx40.0**	Male insert **Screw connection** **70.310.xx40.0**
For technical information see the individual components						
6	**6pole + ground**	M 20	1	99.700.0000.6	●	●
10	**10pole + ground**	M 20	1	99.701.0000.6	●	●
16	**16pole + ground**	M 25	1	99.702.0000.6	●	●
24	**24pole + ground**	M 25	1	99.703.0000.6	●	●
6	**6pole + ground**	M 25	1	99.706.0000.6	●	●
10	**10pole + ground**	M 25	1	99.707.0000.6	●	●
16	**16pole + ground**	M 32	1	99.708.0000.6	●	●
24	**24pole + ground**	M 32	1	99.709.0000.6	●	●
6	**6pole + ground**	M 25	1	99.718.0000.6	●	●
10	**10pole + ground**	M 25	1	99.719.0000.6	●	●
16	**16pole + ground**	M 32	1	99.720.0000.6	●	●
24	**24pole + ground**	M 32	1	99.721.0000.6	●	●
6	**6pole + ground**	M 20	1	99.724.0000.6	●	●
10	**10pole + ground**	M 20	1	99.725.0000.6	●	●
16	**16pole + ground**	M 25	1	99.726.0000.6	●	●
24	**24pole + ground**	M 25	1	99.727.0000.6	●	●

revos

● **parts belonging to the set of 4 components**

Connector set complete with:
Female and male inserts plugged together,
inserted in the mated hood and housing (unassembled), locked

Hood with narrow-side entry metric cable gland **70.35x.xx35.0**	Hood with top entry metric cable gland **70.352.xx35.0**	Open-bottom housing **70.320.xx28.0**	Closed-bottom housing with one metric cable gland **70.331.xx35.0**
●		●	
●		●	
●		●	
●		●	
●		●	
●		●	
●		●	
●		●	
	●	●	
	●	●	
	●	●	
	●	●	
●			●
●			●
●			●
●			●

Industrial multipole connectors
Multipole connector with latching frame

revos BASIC

Latching frame to be inserted in sheet metal cut-out, and for use in cable to cable couplings.

Screw connection	0.5 – 2.5 mm² solid/fine stranded 20 – 12 AWG
Rated current	16 A
Rated voltage VDE	500 V*
Rated voltage CSA	600 V

* The mounting style might change the air and creepage distances and influence the rated voltage.

600 V CSA

500 V, 16 A IEC 61 984

For accessories and marking facilities see page 788

		Approvals	Wire strip length	Stand. pack
Latching frame with strain relief 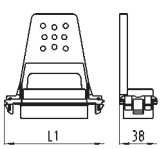	Female insert		7 mm	10
	Male insert		7 mm	10
Latching frame 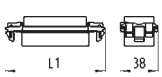	Female insert		7 mm	10
	Male insert		7 mm	10
Latching frame with strain relief and locking levers 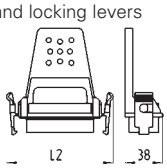	Female insert		7 mm	10
	Male insert		7 mm	10
Latching frame with locking levers 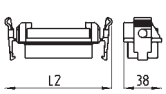	Female insert		7 mm	10
	Male insert		7 mm	10
Multipole adapter with latching frame 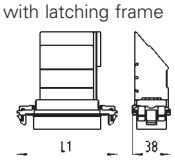	Female insert, ground right Female insert, ground right with U-foot Female insert, ground left Female insert, ground left with U-foot		12 mm	10
	Male insert, ground right Male insert, ground right with U-foot Male insert, ground left Male insert, ground left with U-foot		12 mm	10
Multipole adapter with latching frame and locking levers 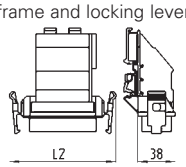	Female insert, ground right Female insert, ground right with U-foot Female insert, ground left Female insert, ground left with U-foot		12 mm	10
	Male insert, ground right Male insert, ground right with U-foot Male insert, ground left Male insert, ground left with U-foot		12 mm	10

revos

6pole + ground	10pole + ground	16pole + ground	24pole + ground
Part no.	Part no.	Part no.	Part no.
Z5.570.0156.0	Z5.570.0256.0	Z5.570.0056.0	Z5.570.0356.0
Z5.571.0156.0	Z5.571.0256.0	Z5.571.0056.0	Z5.571.0356.0
Z5.570.1156.0	Z5.570.1256.0	Z5.570.1056.0	Z5.570.1356.0
Z5.571.1156.0	Z5.571.1256.0	Z5.571.1056.0	Z5.571.1356.0
Z5.570.2156.0	Z5.570.2256.0	Z5.570.2056.0	Z5.570.2356.0
Z5.571.2156.0	Z5.571.2256.0	Z5.571.2056.0	Z5.571.2356.0
Z5.570.3156.0	Z5.570.3256.0	Z5.570.3056.0	Z5.570.3356.0
Z5.571.3156.0	Z5.571.3256.0	Z5.571.3056.0	Z5.571.3356.0
Z5.572.1156.0 Z5.572.5156.0 Z5.572.0156.0 Z5.572.4156.0	Z5.572.1256.0 Z5.572.5256.0 Z5.572.0256.0 Z5.572.4256.0	Z5.572.1056.0 Z5.572.5056.0 Z5.572.0056.0 Z5.572.4056.0	Z5.572.1356.0 Z5.572.5356.0 Z5.572.0356.0 Z5.572.4356.0
Z5.573.1156.0 Z5.573.5156.0 Z5.573.0156.0 Z5.573.4156.0	Z5.573.1256.0 Z5.573.5256.0 Z5.573.0256.0 Z5.573.4256.0	Z5.573.1056.0 Z5.573.5056.0 Z5.573.0056.0 Z5.573.4056.0	Z5.573.1356.0 Z5.573.5356.0 Z5.573.0356.0 Z5.573.4356.0
Z5.572.3156.0 Z5.572.7156.0 Z5.572.2156.0 Z5.572.6156.0	Z5.572.3256.0 Z5.572.7256.0 Z5.572.2256.0 Z5.572.6256.0	Z5.572.3056.0 Z5.572.7056.0 Z5.572.2056.0 Z5.572.6056.0	Z5.572.3356.0 Z5.572.7356.0 Z5.572.2356.0 Z5.572.6356.0
Z5.573.3156.0 Z5.573.7156.0 Z5.573.2156.0 Z5.573.6156.0	Z5.573.3256.0 Z5.573.7256.0 Z5.573.2256.0 Z5.573.6256.0	Z5.573.3056.0 Z5.573.7056.0 Z5.573.2056.0 Z5.573.6056.0	Z5.573.3356.0 Z5.573.7356.0 Z5.573.2356.0 Z5.573.6356.0

Universal foot, 23 mm wide

05.583.0053.0

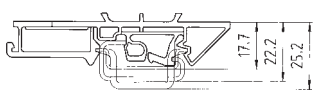

Delivered as standard component where indicated

Cut-out for latching frames

Sheet metal: 2 ± 0.05 mm thick

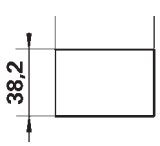

Housing size	L1 (mm)	L2 (mm)	L3 (mm)
6	67.5	74.1	62.5
10	80.9	87.5	75.9
16	101	106.5	96
24	127.8	134.4	122.8

Industrial multipole connectors
Multipole connector with latching frame

revos BASIC

Latching frame to be inserted in sheet metal cut-out, and for use in cable to cable couplings.

Crimp connection	0,5 – 4 mm² fine stranded 20 – 12 AWG
Rated current	16 A
Rated voltage VDE	500 V*
Rated voltage CSA	600 V

* The mounting style might change the air and creepage distances and influence the rated voltage.

600 V CSA

500 V, 16 A IEC 61 984

For accessories and marking facilities see page 788

		Approvals	Wire strip length	Stand. pack
Latching frame with strain relief 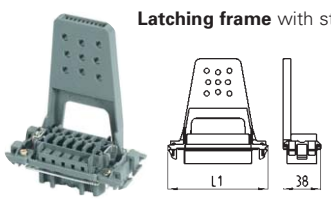	Female insert		7 mm	10
	Male insert		7 mm	10
Latching frame 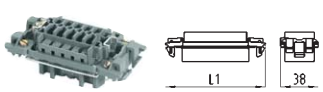	Female insert		7 mm	10
	Male insert		7 mm	10
Latching frame with strain relief and locking levers 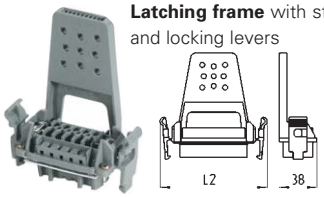	Female insert		7 mm	10
	Male insert		7 mm	10
Latching frame with locking levers 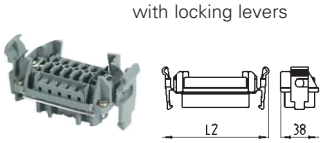	Female insert		7 mm	10
	Male insert		7 mm	10

revos

Contacts for crimp version

	Ø mm²	AWG	Part no.	Stand. pack	Ø mm²	AWG	Part no.	Stand. pack
			tin-plated				gold-plated	
Female contacts	0.5	20 AWG	02.123.7021.0	200	0.5	20 AWG	02.123.7001.0	
	0.75 – 1	18 AWG	02.123.7121.0	200	0.75 – 1	18 AWG	02.123.7101.0	
	1.5	16 AWG	02.123.7221.0	200	1.5	16 AWG	02.123.7201.0	200
	2.5	14 AWG	02.123.7321.0	200	2.5	14 AWG	02.123.7301.0	
	4	12 WG	02.123.7421.0	200	4	12 WG	02.123.7401.0	
Male contacts	0.5	20 AWG	05.543.7021.0	200	0.5	20 AWG	05.543.7001.0	
	0.75 – 1	18 AWG	05.543.7121.0	200	0.75 – 1	18 AWG	05.543.7101.0	
	1.5	16 AWG	05.543.7221.0	200	1.5	16 AWG	05.543.7201.0	200
	2.5	14 AWG	05.543.7321.0	200	2.5	14 AWG	05.543.7301.0	
	4	12 AWG	05.543.7421.0	200	4	12 AWG	05.543.7401.0	
Crimping tool			95.101.0800.0	1				
Crimping die "B"			05.502.2100.0	1			silver-plated upon request	
Contact positioner "3"			05.502.3300.0	1				
Extraction tool			05.502.3500.0	1				

6pole + ground	10pole + ground	16pole + ground	24pole + ground
Part no.	Part no.	Part no.	Part no.
Z5.570.4156.0	Z5.570.4256.0	Z5.570.4056.0	Z5.570.4356.0
Z5.571.4156.0	Z5.571.4256.0	Z5.571.4056.0	Z5.571.4356.0
Z5.570.5156.0	Z5.570.5256.0	Z5.570.5056.0	Z5.570.5356.0
Z5.571.5156.0	Z5.571.5256.0	Z5.571.5056.0	Z5.571.5356.0
Z5.570.6656.0	Z5.570.6756.0	Z5.570.6556.0	Z5.570.6856.0
Z5.571.6656.0	Z5.571.6756.0	Z5.571.6556.0	Z5.571.6856.0
Z5.570.8656.0	Z5.570.8756.0	Z5.570.8556.0	Z5.570.8856.0
Z5.571.8656.0	Z5.571.8756.0	Z5.571.8556.0	Z5.571.8856.0

Universal foot, 23 mm wide

05.583.0053.0

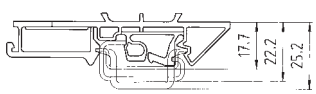

Delivered as standard component where indicated

Cut-out for latching frames

Sheet metal: 2 ± 0.05 mm thick

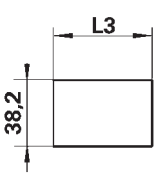

Housing size	L1 (mm)	L2 (mm)	L3 (mm)
6	67.5	74.1	62.5
10	80.9	87.5	75.9
16	101	106.5	96
24	127.8	134.4	122.8

Industrial multipole connectors
Multipole connector with latching frame

revos BASIC

Latching frame to be inserted in sheet metal cut-out, and for use in cable to cable couplings.

Screw connection	0.5 – 2.5 mm² solid/fine stranded 20 – 12 AWG
Rated current	16 A
Rated voltage VDE	
– multipole connector	690 V ~*
– multipole adapter	500 V ~*
Rated voltage CSA	600 V

* The mounting style might change the air and creepage distances and influence the rated voltage.

600 V CSA

690 V, 16 A IEC 61 984

For accessories and marking facilities see page 788

		Approvals	Wire strip length	Stand. pack
Latching frame with strain relief 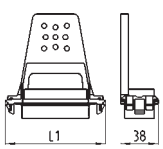	Female insert		7 mm	10
	Male insert		7 mm	10
Latching frame 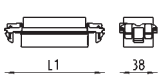	Female insert		7 mm	10
	Male insert		7 mm	10
Latching frame with strain relief and locking levers 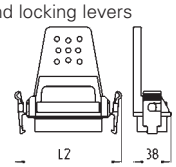	Female insert		7 mm	10
	Male insert		7 mm	10
Latching frame with locking levers 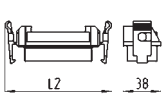	Female insert		7 mm	10
	Male insert		7 mm	10
Multipole adapter with latching frame 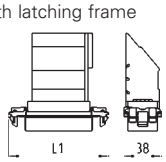	Female insert, ground right Female insert, ground right with U-foot Female insert, ground left Female insert, ground left with U-foot		12 mm	10
	Male insert, ground right Male insert, ground right with U-foot Male insert, ground left Male insert, ground left with U-foot		12 mm	10
Multipole adapter with latching frame and locking levers 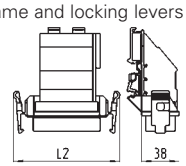	Female insert, ground right Female insert, ground right with U-foot Female insert, ground left Female insert, ground left with U-foot		12 mm	10
	Male insert, ground right Male insert, ground right with U-foot Male insert, ground left Male insert, ground left with U-foot		12 mm	10

revos

6pole + ground	10pole + ground	16pole + ground	24pole + ground
Part no.	Part no.	Part no.	Part no.
Z5.570.0656.0	Z5.570.0756.0	Z5.570.0556.0	Z5.570.0856.0
Z5.571.0656.0	Z5.571.0756.0	Z5.571.0556.0	Z5.571.0856.0
Z5.570.1656.0	Z5.570.1756.0	Z5.570.1556.0	Z5.570.1856.0
Z5.571.1656.0	Z5.571.1756.0	Z5.571.1556.0	Z5.571.1856.0
Z5.570.2656.0	Z5.570.2756.0	Z5.570.2556.0	Z5.570.2856.0
Z5.571.2656.0	Z5.571.2756.0	Z5.571.2556.0	Z5.571.2856.0
Z5.570.3656.0	Z5.570.3756.0	Z5.570.3556.0	Z5.570.3856.0
Z5.571.3656.0	Z5.571.3756.0	Z5.571.3556.0	Z5.571.3856.0
Z5.572.1656.0 Z5.572.5656.0 Z5.572.0656.0 Z5.572.4656.0	Z5.572.1756.0 Z5.572.5756.0 Z5.572.0756.0 Z5.572.4756.0	Z5.572.1556.0 Z5.572.5556.0 Z5.572.0556.0 Z5.572.4556.0	Z5.572.1856.0 Z5.572.5856.0 Z5.572.0856.0 Z5.572.4856.0
Z5.573.1656.0 Z5.573.5656.0 Z5.573.0656.0 Z5.573.4656.0	Z5.573.1756.0 Z5.573.5756.0 Z5.573.0756.0 Z5.573.4756.0	Z5.573.1556.0 Z5.573.5556.0 Z5.573.0556.0 Z5.573.4556.0	Z5.573.1856.0 Z5.573.5856.0 Z5.573.0856.0 Z5.573.4856.0
Z5.572.3656.0 Z5.572.7656.0 Z5.572.2656.0 Z5.572.6656.0	Z5.572.3756.0 Z5.572.7756.0 Z5.572.2756.0 Z5.572.6756.0	Z5.572.3556.0 Z5.572.7556.0 Z5.572.2556.0 Z5.572.6556.0	Z5.572.3856.0 Z5.572.7856.0 Z5.572.2856.0 Z5.572.6856.0
Z5.573.3656.0 Z5.573.7656.0 Z5.573.2656.0 Z5.573.6656.0	Z5.573.3756.0 Z5.573.7756.0 Z5.573.2756.0 Z5.573.6756.0	Z5.573.3556.0 Z5.573.7556.0 Z5.573.2556.0 Z5.573.6556.0	Z5.573.3856.0 Z5.573.7856.0 Z5.573.2856.0 Z5.573.6856.0

Universal foot, 23 mm wide

05.583.0053.0

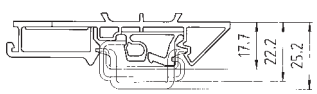

Delivered as standard component where indicated

Cut-out for latching frames

Sheet metal: 2 ± 0.05 mm thick

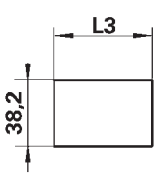

Housing size	L1 (mm)	L2 (mm)	L3 (mm)
6	67.5	74.1	62.5
10	80.9	87.5	75.9
16	101	106.5	96
24	127.8	134.4	122.8

Industrial multipole connectors
Multipole connector with latching frame

revos BASIC

600 V CSA

690 V, 16 A IEC 61 984

Latching frame to be inserted in sheet metal cut-out, and for use in cable to cable couplings.

Crimp connection	0,5 – 4 mm² fine stranded 20 – 12 AWG
Rated current	16 A
Rated voltage VDE	690 V ~*
Rated voltage CSA	600 V

* The mounting style might change the air and creepage distances and influence the rated voltage.

For accessories and marking facilities see page 788

		Dimensions in mm L W H	Approvals	Wire strip length	Stand. pack
	Latching frame with strain relief 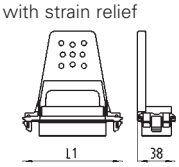	Female insert		7 mm	10
		Male insert		7 mm	10
	Latching frame 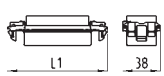	Female insert		7 mm	10
		Male insert		7 mm	10
	Latching frame with strain relief and locking levers 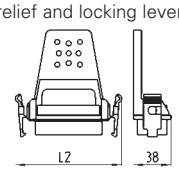	Female insert		7 mm	10
		Male insert		7 mm	10
	Latching frame with locking levers 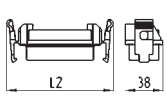	Female insert		7 mm	10
		Male insert		7 mm	10

revos

Contacts for crimp version

	Ø mm²	AWG	Part no.	Stand. pack	Ø mm²	AWG	Part no.	Stand. pack
			tin-plated				gold-plated	
Female contacts	0.5	20 AWG	02.123.7021.0	200	0.5	20 AWG	02.123.7001.0	
	0.75 – 1	18 AWG	02.123.7121.0	200	0.75 – 1	18 AWG	02.123.7101.0	
	1.5	16 AWG	02.123.7221.0	200	1.5	16 AWG	02.123.7201.0	200
	2.5	14 AWG	02.123.7321.0	200	2.5	14 AWG	02.123.7301.0	
	4	12 WG	02.123.7421.0	200	4	12 WG	02.123.7401.0	
Male contacts	0.5	20 AWG	05.543.7021.0	200	0.5	20 AWG	05.543.7001.0	
	0.75 – 1	18 AWG	05.543.7121.0	200	0.75 – 1	18 AWG	05.543.7101.0	
	1.5	16 AWG	05.543.7221.0	200	1.5	16 AWG	05.543.7201.0	200
	2.5	14 AWG	05.543.7321.0	200	2.5	14 AWG	05.543.7301.0	
	4	12 AWG	05.543.7421.0	200	4	12 AWG	05.543.7401.0	
Crimping tool			95.101.0800.0	1				
Crimping die "B"			05.502.2100.0	1			silver-plated upon request	
Contact positioner "3"			05.502.3300.0	1				
Extraction tool			05.502.3500.0	1				

6pole + ground	10pole + ground	16pole + ground	24pole + ground
Part no.	Part no.	Part no.	Part no.
Z5.570.4656.0	Z5.570.4756.0	Z5.570.4556.0	Z5.570.4856.0
Z5.571.4656.0	Z5.571.4756.0	Z5.571.4556.0	Z5.571.4856.0
Z5.570.5656.0	Z5.570.5756.0	Z5.570.5556.0	Z5.570.5856.0
Z5.571.5656.0	Z5.571.5756.0	Z5.571.5556.0	Z5.571.5856.0
Z5.570.7656.0	Z5.570.7756.0	Z5.570.7556.0	Z5.570.7856.0
Z5.571.7656.0	Z5.571.7756.0	Z5.571.7556.0	Z5.571.7856.0
Z5.570.9656.0	Z5.570.9756.0	Z5.570.9556.0	Z5.570.9856.0
Z5.571.9656.0	Z5.571.9756.0	Z5.571.9556.0	Z5.571.9856.0

Universal foot, 23 mm wide

05.583.0053.0

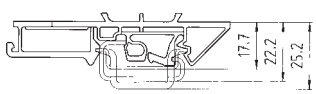

Delivered as standard component where indicated

Cut-out for latching frames

Sheet metal: 2 ± 0.05 mm thick

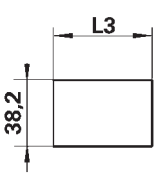

Housing size	L1 (mm)	L2 (mm)	L3 (mm)
6	67.5	74.1	62.5
10	80.9	87.5	75.9
16	101	106.5	96
24	127.8	134.4	122.8

Industrial multipole connectors
Multipole connector with latching frame

revos BASIC

600 V CSA
250 V, 10 A IEC 61 984

Latching frame to be inserted in sheet metal cut-out, and for use in cable to cable couplings.

Screw connection	0,5 – 2.5 mm² solid/fine stranded 20 – 12 AWG
Crimp connection	0,2 – 1.5 mm² fine stranded 24 – 16 AWG
Rated current	10 A
Rated voltage VDE	250 V*
Rated voltage CSA	600 V

* The mounting style might change the air and creepage distances and influence the rated voltage.

For accessories and marking facilities see page 788

		Approvals	Wire strip length	Stand. pack
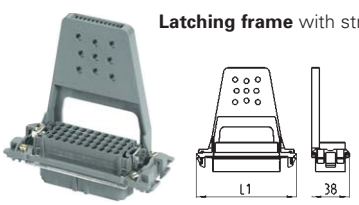 **Latching frame** with strain relief	Female insert in crimp version		4 mm	10
	Male insert in crimp version		4 mm	10
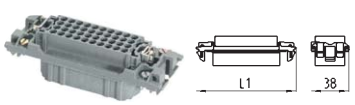 **Latching frame**	Female insert in crimp version		4 mm	10
	Male insert in crimp version		4 mm	10
Latching frame with strain relief and locking levers	Female insert in crimp version		4 mm	10
	Male insert in crimp version		4 mm	10
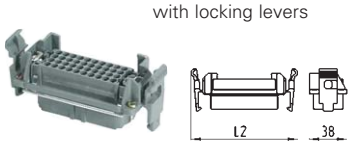 **Latching frame** with locking levers	Female insert in crimp version		4 mm	10
	Male insert in crimp version		4 mm	10
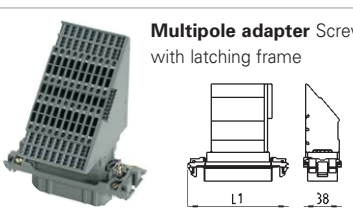 **Multipole adapter** Screw version with latching frame	Female insert, ground right Female insert, ground right with U-foot Female insert, ground left Female insert, ground left with U-foot		12 mm	4
	Male insert, ground right Male insert, ground right with U-foot Male insert, ground left Male insert, ground left with U-foot		12 mm	4
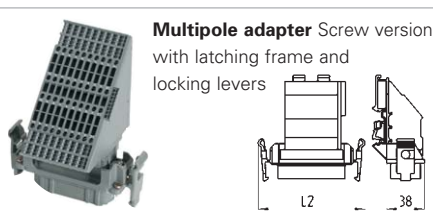 **Multipole adapter** Screw version with latching frame and locking levers	Female insert, ground right Female insert, ground right with U-foot Female insert, ground left Female insert, ground left with U-foot		12 mm	4
	Male insert, ground right Male insert, ground right with U-foot Male insert, ground left Male insert, ground left with U-foot		12 mm	4

revos

Contacts for crimp version

Female contacts

Male contacts

Ø mm²	AWG	Part no.	Stand. pack
0.2 – 0.56 mm²	24 – 20	tin-plated	
Reel contacts		02.124.0900.0	5000
Single contacts		02.124.0929.0	200
0.75 – 1.50 mm²	18 – 16		
Reel contacts		02.124.1000.0	5000
Single contacts		02.124.1029.0	200
0.2 – 0.56 mm²	24 – 20		
Reel contacts		05.544.0900.0	5000
Single contacts		05.544.0929.0	200
0.75 – 1.50 mm²	18 – 16		
Reel contacts		05.544.1000.0	5000
Single contacts		05.544.1029.0	200

Ø mm²	AWG	Part no.	Stand. pack
0.5 – 1.50 mm²	20 – 16	gold-plated	
Reel contacts		02.124.1400.0	5000
Single contacts		02.124.1429.0	200
0.5 – 1.50 mm²	20 – 16		
Reel contacts		05.544.1400.0	5000
Single contacts		05.544.1429.0	200
Crimping tool		95.101.0800.0	1
Crimping die "E"		05.502.2400.0	1
Contact positioner "2"		05.502.3200.0	1
Extraction tool		05.502.0000.0	1

40pole + ground	64pole + ground
Part no.	Part no.
Z5.570.6056.0	Z5.570.6156.0
Z5.571.6056.0	Z5.571.6156.0
Z5.570.7056.0	Z5.570.7156.0
Z5.571.7056.0	Z5.571.7156.0
Z5.570.8056.0	Z5.570.8156.0
Z5.571.8056.0	Z5.571.8156.0
Z5.570.9056.0	Z5.570.9156.0
Z5.571.9056.0	Z5.571.9156.0
Z5.572.8356.0 Z5.572.9356.0 Z5.572.8056.0 Z5.572.9156.0	Z5.572.8456.0 Z5.572.9456.0 Z5.572.8156.0 Z5.572.9256.0
Z5.573.8356.0 Z5.573.9356.0 Z5.573.8056.0 Z5.573.9156.0	Z5.573.8456.0 Z5.573.9456.0 Z5.573.8156.0 Z5.573.9256.0
Z5.572.8956.0 Z5.572.9756.0 Z5.572.8656.0 Z5.572.9556.0	Z5.572.9056.0 Z5.572.9856.0 Z5.572.8756.0 Z5.572.9656.0
Z5.573.8956.0 Z5.573.9756.0 Z5.573.8656.0 Z5.573.9556.0	Z5.573.9056.0 Z5.573.9856.0 Z5.573.8756.0 Z5.573.9656.0

Universal foot, 23 mm wide

05.583.0053.0

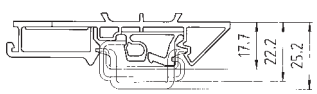

Delivered as standard component where indicated

Cut-out for latching frames

Sheet metal: 2 ± 0.05 mm thick

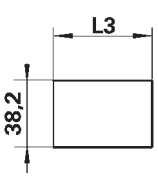

Housing size	L1 (mm)	L2 (mm)	L3 (mm)
40	101	106.5	96
64	127.8	134.4	122.8

Industrial Multipole Connector
EMC hoods and housings for multipole connectors

revos BASIC

Hood
10-/16-/24 pole

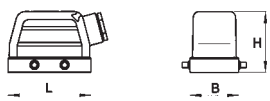

Open-bottom housing
10-/16-/24 pole

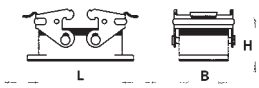

Hood
6 pole

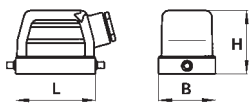

Open-bottom housing
6 pole

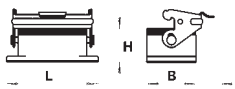

Suited for:
Multipole connector inserts
revos BASIC
revos FLEX

Hood

Picture only for
10-/16-/24 pole

Open-bottom housing

Picture only for
10-/16-/24 pole

Number of poles	Thread	Cable gland type	L	W	H	Stand. pack	Hood Part no.	Open-bottom housing Part no.
Housing size **6** for multipole connectors **6pole + ground** single locking lever			80	48	30.3	1		70.320.0638.0
	M 20	1 with thread	60	43	51		70.350.0645.1	
	M 25	1 with thread	60	43	51		70.353.0645.1	
	M 32	1 with thread	60	43	70		73.353.0645.1	
Housing size **10** for multipole connectors **10pole + ground** double locking levers			93	48	30.3	1		70.320.1038.0
	M 25	1 with thread	73	43	51		70.350.1045.1	
	M 32	1 with thread	73	43	70		73.353.1045.1	
Housing size **16** for multipole connectors **16pole + ground** double locking levers			113	48	30.3	1		70.320.1638.0
	M 32	1 with thread	93.5	43	62		70.353.1645.1	
	M 32	1 with thread	93.5	43	76		73.353.4045.1	
Housing size **24** for multipole connectors **24pole + ground** double locking levers			140	48	30.3	1		70.320.2438.0
	M 32	1 with thread	120	43	62		70.353.2445.1	
	M 32	1 with thread	120	43	76		73.353.6445.1	

Mounting dimensions
and cut-outs for
open-bottom housings

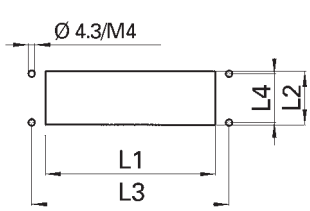

Housing size	Cut-out (mm)		Mounting dimensions (mm)	
	L1	L2	L3	L4
6	52	35	70	32
10	65	35	83	32
16	85,5	35	103	32
24	112	35	130	32

Cable gland for EMC hoods/housings

Z5.507.4821.0	M 20
Z5.507.5021.0	M 25
Z5.507.5221.0	M 32

EMC hoods and housings for multipole connectors

revos

Multipole connectors function as an interface between the individual system components and influence the function of the entire system.

For this reason, Wieland Electric GmbH offers electromagnetic compatible (EMC) hoods and housings which help to maintain the function of the entire system.

In former times we had to cope with the danger of interrupted cable shielding whenever they were connected via multipole connectors. The electrical signals could not suffienctly be shielded against electromagnetic fields.

The solution:

- ❑ Contact is made by putting an open shield over a special EMC cable gland for ground connection between the cable and the connector.
- ❑ Contact between the hood and the housing via a HF gasket (silver-plated contact zone). When the hood is plugged together with the housing, the unit forms a maze which guarantees the EMC protection on this interface.
- ❑ By means of screws, the housing is mounted to a metal partition plate for ground connection.
- ❑ Highly conductive surface plating of the EMC hoods and housings for improved contacting on the individual interfaces.

System advantages:

- ➠ High screening attenuation
- ➠ 360° HF overall protection
- ➠ Highly conductive surface of the hoods and housings
- ➠ 6/10/16/24pole hood and housing sizes in high and flat design
- ➠ Different hood and housing variants
- ➠ Degree of protection IP 65 with closed locking levers

***1** 16pole EMC multipole connector hoods/housings
***2** 16pole standard multipole connector hoods/housings with EMC cable glands

revos POWER

Technical information

■ **Approvals**	UL, CSA, SEV, MEEI		
■ **Applicable standards**	IEC 61 984		
■ **Contact inserts**			
Number of poles	6 + ground	/ 6 + ground	/ 4 + ground
Rated current	35 A	/ 35 A	/ 82 A
Rated voltage	400 V	/ 690 V	/ 690/400 V
Screw connection	2.5 – 6 mm^2	/ 2.5 – 6 mm^2	/ 6 – 16 mm^2
	14 – 8 AWG	/14 – 8 AWG	/10 – 4 AWG
Number of poles	4/6 + ground	/ 6/6 + ground	
Rated current	35/16 A	/ 40/16 A	
Rated voltage	690 V	/ 690/400 V + 400/230 V	
Screw connection	4 x 2.5 – 6 mm^2	/ 6 x 4 – 10 mm^2	
	4 x 14 – 8 AWG	/ 6 x 12 – 6 AWG	
	6 x 1 – 2.5 mm^2	/ 6 x 1 – 2.5 mm^2	
	6 x 16 – 12 AWG	/ 6 x 16 – 12 AWG	
Number of poles	3/3/6 + ground	/ 4/2 + ground	
Rated current	100/40/16 A	/ 82/16 A (70/16 A CSA)	
Rated voltage	690/400 V	/ 690 V	
	690/400 V	/ 400 V	
	400/230 V		
Screw connection	3 x 10 – 25 mm^2	/ 4 x 6 — 16 mm^2	
	3 x AWG 8 – 2	/ 4 x AWG 10 – 4	
	3 x 4 – 10 mm^2	/ 2 x 1 – 2.5 mm^2	
	3 x AWG 12 – 6	/ 2 x AWG 16 – 12	
	6 x 1 – 2.5 mm^2		
	6 x AWG 16 – 12		
Nominal voltage accord. to UL	600 V		
Nominal voltage accord. to CSA	600 V		
Degree of pollution	3		
Temperature range	–40 to +110 °C		
■ **Multipole adapters**			
Number of poles	6 + ground	/ 6 + ground	/ 4/6 + ground
Rated current	35 A	/ 35 A	/ 35/16 A
Rated voltage	400 V	/ 690 V	/ 500 V
Screw connection	2.5 – 6.0 mm^2	/ 2.5 – 6.0 mm^2	/ 4 x 2.5 – 6.0 mm^2 / 6 x 1.5 – 4 mm^2
	14 – 8 AWG	/ 14 – 8 AWG	/ 4 x 14 – 8 AWG / 6 x 16 – 12 AWG
Nominal voltage accord. to UL	600 V		
Nominal voltage accord. to CSA	600 V		
Degree of pollution	3		
Temperature range	–40 to +110 °C		
■ **Contacts**			
Material	copper alloy		
Surface	tin-plated		
Surface	silver-plated		
■ **Hoods and housings**			
Material	die cast aluminum alloy		
Surface	silver gray, silicon-free finish		
Locking levers	zinc-plated steel		
Gaskets	NBR		
Temperature range	–40 to +110 °C		
Degree of protection accord. to DIN EN 60 529			
with latched locking levers	IP 55		
with appropriate cable glands	IP 65		

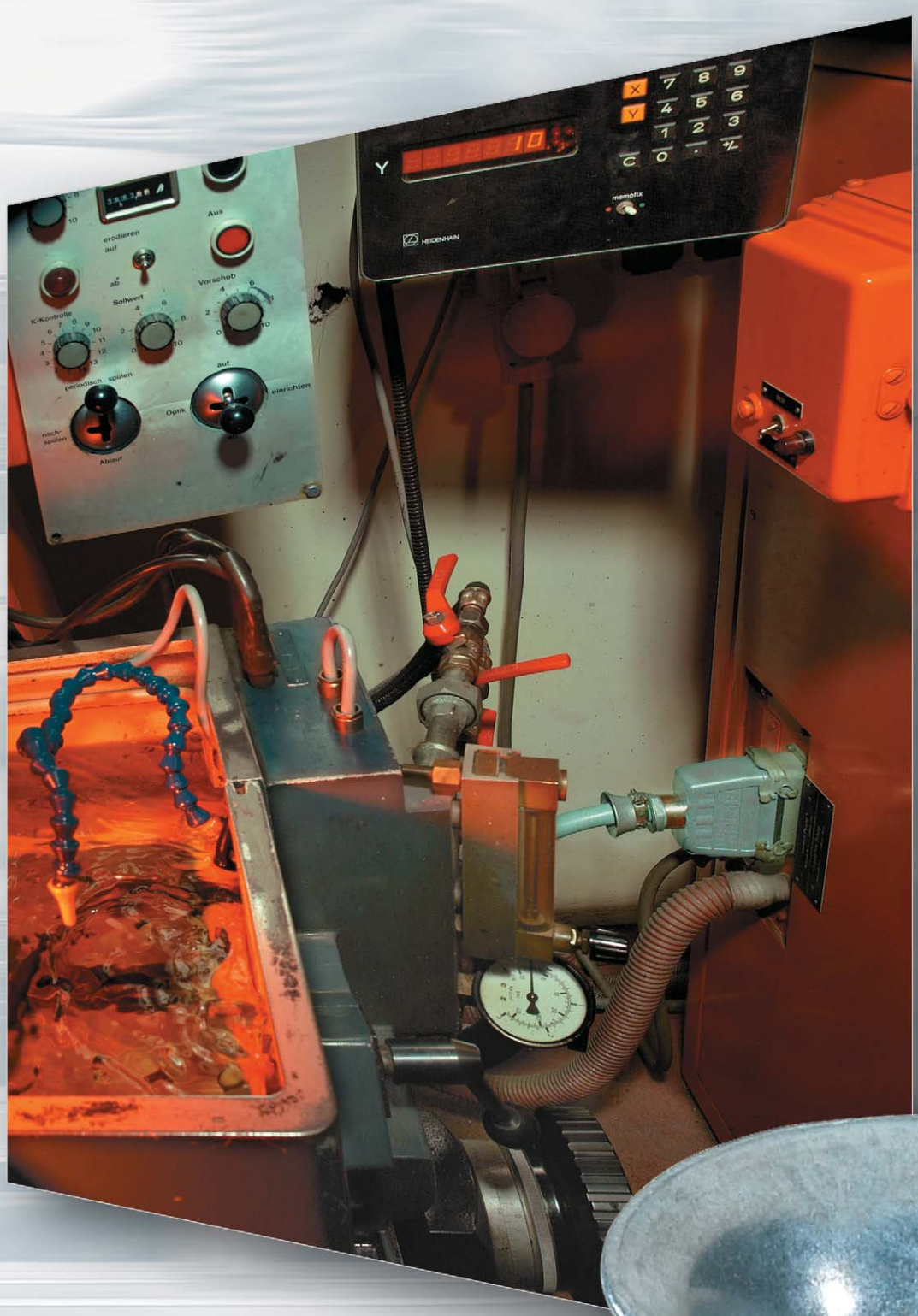

revos

Industrial Multipole Connectors

Industrial multipole connectors, female and male inserts, multipole adapters, hoods and housings with single locking levers, 6pole

revos POWER

600 V UL/CSA

400 V, 35 A IEC 61 984

Degrees of protection: IP 55; IP 65 with the appropriate cable glands

		Cross section	Approvals	Wire strip length	Material	Stand. pack
Screw connection	Female insert	2.5 – 6 mm² 14 – 8 AWG		10 mm	silver-plated	10
	Male insert	2.5 – 6 mm² 14 – 8 AWG		10 mm	silver-plated	10
Screw connection Multipole adapters	Female insert, ground right	2.5 – 6 mm² 14 – 8 AWG		12 mm	silver-plated	10
	Female insert, ground left			12 mm	silver-plated	10
	Male insert, ground right	2.5 – 6 mm² 14 – 8 AWG		12 mm	silver-plated	10
	Male insert, ground left			12 mm	silver-plated	10

Number of poles	Thread	Cable gland type	Stand. pack
Housing size **16** for multipole connectors **6pole + ground**	M 25	0 with cable gland 1 with thread 2 with intermediate support 3 with strain relief	1

	Open-bottom housing	Closed-bottom housing with two narrow-side entry cable glands	Closed bottom housing with one narrow-side entry cable gland on the left

Number of poles	Thread	Cable gland type	Stand. pack	Part no.	Part no.	Part no.
Housing size **16** for multipole connectors **6pole + ground**	M 25	0 with cable gland	1	71.320.1628.0		
		1 with thread	1		71.330.1635.0	71.331.1635.0
			1		71.330.1635.1	71.331.1635.1

revos

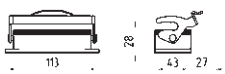

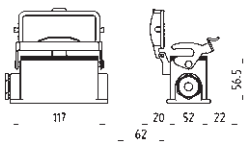

6pole + ground

Pole assignment

Male insert 6pole + ground

Female insert 6pole + ground

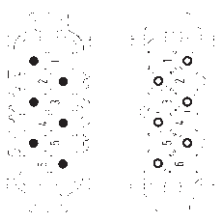

Dimensions of the multipole adapters

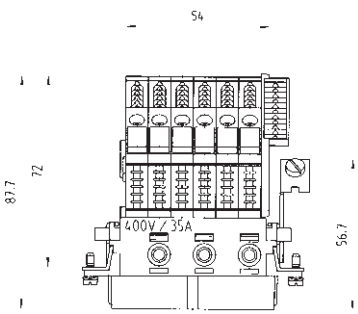

Mounting dimensions and cut-outs for open-bottom housings

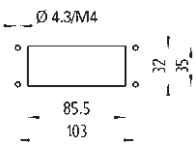

Mounting dimensions for closed-bottom housings

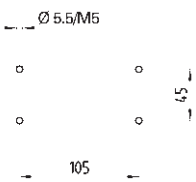

Part no.
70.200.0653.0
70.210.0653.0
70.005.0653.0 70.000.0653.0
70.015.0653.0 70.010.0653.0

Hood	Hood	Hood			
Part no.	Part no.	Part no.			
71.350.1635.0 71.350.1635.1 71.350.1635.2 71.350.1635.3	71.351.1635.0 71.351.1635.1 71.351.1635.2 71.351.1635.3	71.352.1635.0 71.352.1635.1 71.352.1635.2 71.352.1635.3			
Closed-bottom housing with two bottom entry cable glands	Open-bottom housing with protective cover	Closed-bottom housing with two narrow-side entry cable glands and protective cover	Closed-bottom housing with narrow-side entry cable gland on the left and protective cover	Closed-bottom housing with narrow-side entry cable gland on the left and protective cover	Closed-bottom housing with bottom entry cable gland and protective cover
Part no.	Part no.	Part no.	Part no.	Part no.	Part no.
71.333.1635.0 71.333.1635.1	71.325.1628.0	71.340.1635.0 71.340.1635.1	71.341.1635.0 71.341.1635.1	71.342.1635.0 71.342.1635.1	71.343.1635.0 71.343.1635.1

Industrial multipole connectors, female and male inserts, multipole adapters, hoods and housings with double locking levers, 6pole

revos POWER

600 V UL/CSA

400 V, 35 A IEC 61 984

Degree of protection: IP 55; IP 65 with the appropriate cable glands

		Cross section	Approvals	Wire strip length	Material	Stand. pack
Screw connection	Female insert	2.5 – 6 mm² 14 – 8 AWG		10 mm	silver-plated	10
	Male insert	2.5 – 6 mm² 14 – 8 AWG		10 mm	silver-plated	10
Screw connection Multipole adapters	Female insert, ground right	2.5 – 6 mm² 14 – 8 AWG		12 mm	silver-plated	10
	Female insert, ground left			12 mm	silver-plated	10
	Male insert, ground right	2.5 – 6 mm² 14 – 8 AWG		12 mm	silver-plated	10
	Male insert, ground left			12 mm	silver-plated	10

Number of poles	Thread	Cable gland type	Stand. pack
Housing size **16** for multipole connectors **6pole + ground**	M 25	0 with cable gland 1 with thread 2 with intermediate support 3 with strain relief	1

Number of poles	Thread	Cable gland type	Stand. pack	Open-bottom housing Part no.	Closed-bottom housing with two narrow-side entry cable glands Part no.	Closed bottom housing with one narrow-side entry cable gland on the left Part no.
Housing size **16** for multipole connectors **6pole + ground**	M 25	0 with cable gland	1	70.320.1628.0		
		1 with thread	1		70.330.1635.0	70.331.1635.0
			1		70.330.1635.1	70.331.1635.1

revos

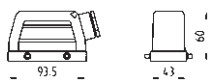

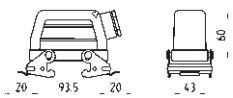

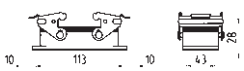

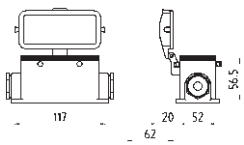

6pole + ground

Pole assignment

Male insert 6pole + ground

Female insert 6pole + ground

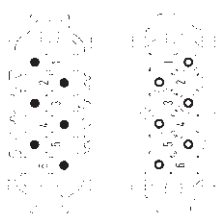

Dimensions of the multipole adapters

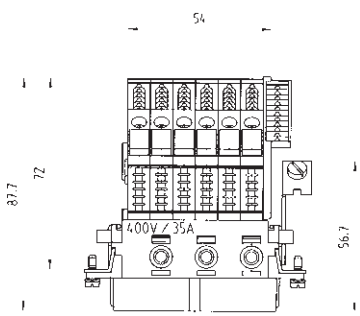

Mounting dimensions and cut-outs for open-bottom housings

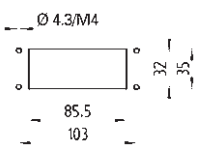

Mounting dimensions for closed-bottom housings

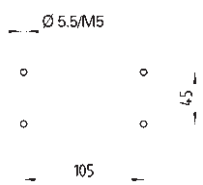

Part no.
70.200.0653.0
70.210.0653.0
70.005.0653.0 70.000.0653.0
70.015.0653.0 70.010.0653.0

Hood with cable gland

Part no.
70.350.1635.0 70.350.1635.1 70.350.1635.2 70.350.1635.3

Hood with cable gland

Part no.
70.351.1635.0 70.351.1635.1 70.351.1635.2 70.351.1635.3

Hood with cable gland

Part no.
70.352.1635.0 70.352.1635.1 70.352.1635.2 70.352.1635.3

Hood with cable gland and locking levers

Part no.
70.355.1635.0 70.355.1635.1 70.355.1635.2 70.355.1635.3

Hood with cable gland

Part no.
70.356.1635.0 70.356.1635.1 70.356.1635.2 70.356.1635.3

Hood with cable glands and locking levers

Part no.
70.357.1635.0 70.357.1635.1 70.357.1635.2 70.357.1635.3

Closed-bottom housing with two bottom entry cable glands

Part no.
70.333.1635.0 70.333.1635.1

Open-bottom housing with protective cover

Part no.
70.325.1628.0

Closed-bottom housing with two narrow-side entry cable glands and protective cover

Part no.
70.340.1635.0 70.340.1635.1

Closed-bottom housing with narrow-side entry cable gland on the left and protective cover

Part no.
70.341.1635.0 70.341.1635.1

Closed-bottom housing with narrow-side entry cable gland on the left and protective cover

Part no.
70.342.1635.0 70.342.1635.1

Closed-bottom housing with bottom entry cable gland and protective cover

Part no.
70.343.1635.0 70.343.1635.1

Industrial multipole connectors, female and male inserts, multipole adapters, hoods and housings with single locking levers, 6pole

revos POWER

600 V UL/CSA

690 V, 35 A IEC 61 984

Degrees of protection: IP 55; IP 65 with the appropriate cable glands

		Cross section	Approvals	Wire strip length	Material	Stand. pack
Screw connection	Female insert	2.5 – 6 mm² 14 – 8 AWG		10 mm	silver-plated	10
	Male insert	2.5 – 6 mm² 14 – 8 AWG		10 mm	silver-plated	10
Screw connection Multipole adapters	Female insert, ground right	2.5 – 6 mm² 14 – 8 AWG		12 mm	silver-plated	10
	Female insert, ground left			12 mm	silver-plated	10
	Male insert, ground right	2.5 – 6 mm² 14 – 8 AWG		12 mm	silver-plated	10
	Male insert, ground left			12 mm	silver-plated	10

Number of poles	Thread	Cable gland type	Stand. pack
Housing size**16** for multipole connectors **6pole + ground**	M 25	0 with cable gland 1 with thread 2 with intermediate support 3 with strain relief	1

	Open-bottom housing	Closed-bottom housing with two narrow-side entry cable glands	Closed bottom housing with one narrow-side entry cable gland on the left

Number of poles	Thread	Cable gland type	Stand. pack	Part no.	Part no.	Part no.
Housing size**16** for multipole connectors **6pole + ground**	M 25	0 with cable gland	1	71.320.1628.0		
		1 with thread	1		71.330.1635.0	71.331.1635.0
			1		71.330.1635.1	71.331.1635.1

revos

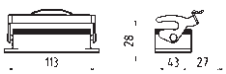

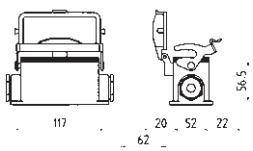

6pole + ground

Pole assignment

Male insert 6pole + ground

Female insert 6pole + ground

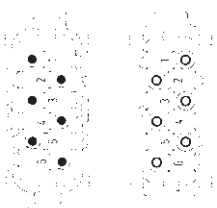

Dimensions of the multipole adapters

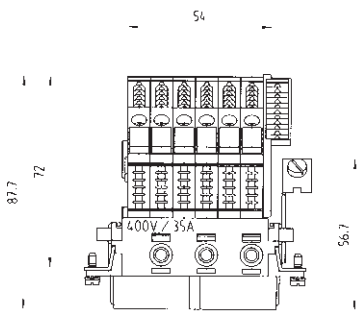

Mounting dimensions and cut-outs for open-bottom housings

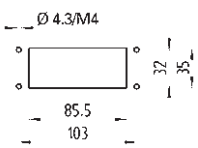

Mounting dimensions for closed-bottom housings

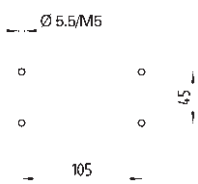

Part no.
72.200.0653.0
72.210.0653.0
72.005.0653.0 72.000.0653.0
72.015.0653.0 72.010.0653.0

Hood with cable gland	Hood with cable gland	Hood with cable gland			
Part no.	Part no.	Part no.			
71.350.1635.0 71.350.1635.1 71.350.1635.2 71.350.1635.3	71.351.1635.0 71.351.1635.1 71.351.1635.2 71.351.1635.3	71.352.1635.0 71.352.1635.1 71.352.1635.2 71.352.1635.3			
Closed-bottom housing with two bottom entry cable glands	Open-bottom housing with protective cover	Closed-bottom housing with two narrow-side entry cable glands and protective cover	Closed-bottom housing with narrow-side entry cable gland on the left and protective cover	Closed-bottom housing with narrow-side entry cable gland on the left and protective cover	Closed-bottom housing with bottom entry cable gland and protective cover
Part no.	Part no.	Part no.	Part no.	Part no.	Part no.
71.333.1635.0 71.333.1635.1	71.325.1628.0	71.340.1635.0 71.340.1635.1	71.341.1635.0 71.341.1635.1	71.342.1635.0 71.342.1635.1	71.343.1635.0 71.343.1635.1

Industrie multipole connectors, female and male inserts, multipole adapters, hoods and housings with double locking levers, 6pole

revos POWER

600 V UL/CSA

690 V, 35 A IEC 61 984

Degrees of protection: IP 55; IP 65 with the appropriate cable glands

		Cross section	Approvals	Wire strip length	Material	Stand. pack
Screw connection	Female insert	2.5 – 6 mm² 14 – 8 AWG		10 mm	tin-plated	10
	Male insert	2.5 – 6 mm² 14 – 8 AWG		10 mm	tin-plated	10
Screw connection Multipole adapters	Female insert, ground right	2.5 – 6 mm² 14 – 8 AWG		12 mm	tin-plated	10
	Female insert, ground left			12 mm	tin-plated	10
	Male insert, ground right	2.5 – 6 mm² 14 – 8 AWG		12 mm	tin-plated	10
	Male insert, ground left			12 mm	tin-plated	10

Number of poles	Thread	Cable gland type	Stand. pack
Housing size **16** for multipole connectors **6pole + ground**	M 25	0 with cable gland 1 with thread 2 with intermediate support 3 with strain relief	1

Number of poles	Thread	Cable gland type	Stand. pack	Open-bottom housing	Closed-bottom housing with two narrow-side entry cable glands	Closed bottom housing with one narrow-side entry cable gland on the left
					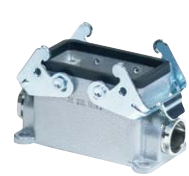	
Housing size **16** for multipole connectors **6pole + ground**	M 25	0 with cable gland	1	70.320.1628.0		
		1 with thread	1		70.330.1635.0	70.331.1635.0
			1		70.330.1635.1	70.331.1635.1

revos

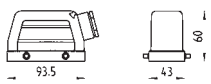

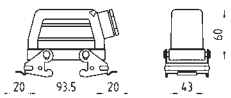

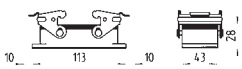

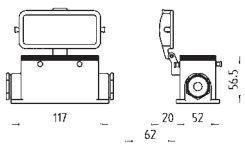

6pole + ground

Pole assignment

Male insert 6pole + ground

Female insert 6pole + ground

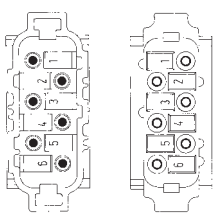

Dimensions of the multipole adapters

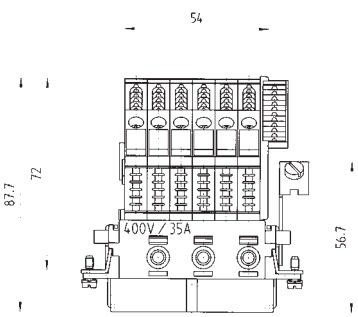

Mounting dimensions and cut-outs for open-bottom housings

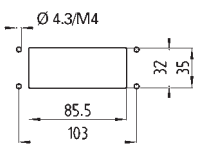

Mounting dimensions for closed-bottom housings

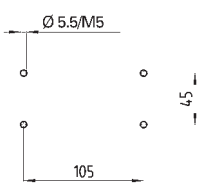

Part no.
72.200.0653.0
72.210.0653.0
72.005.0653.0 72.000.0653.0
72.015.0653.0 72.010.0653.0

Hood	Hood	Hood	Hood with locking levers	Hood with locking levers	Hood with locking levers
Part no.	Part no.	Part no.	Part no.	Part no.	Part no.
70.350.1635.0 70.350.1635.1 70.350.1635.2 70.350.1635.3	70.351.1635.0 70.351.1635.1 70.351.1635.2 70.351.1635.3	70.352.1635.0 70.352.1635.1 70.352.1635.2 70.352.1635.3	70.355.1635.0 70.355.1635.1 70.355.1635.2 70.355.1635.3	70.356.1635.0 70.356.1635.1 70.356.1635.2 70.356.1635.3	70.357.1635.0 70.357.1635.1 70.357.1635.2 70.357.1635.3

Closed-bottom housing with two bottom entry cable glands	Open-bottom housing with protective cover	Closed-bottom housing with two narrow-side entry cable glands and protective cover	Closed-bottom housing with narrow-side entry cable gland on the left and protective cover	Closed-bottom housing with narrow-side entry cable gland on the left and protective cover	Closed-bottom housing with bottom entry cable gland and protective cover
Part no.	Part no.	Part no.	Part no.	Part no.	Part no.
70.333.1635.0 70.333.1635.1	70.325.1628.0	70.340.1635.0 70.340.1635.1	70.341.1635.0 70.341.1635.1	70.342.1635.0 70.342.1635.1	70.343.1635.0 70.343.1635.1

Industrial multipole connectors, female and male inserts, multipole adapters, hoods and housings with single locking levers, 4pole

revos POWER

600 V UL/CSA

690 V/400 V, 82 A IEC 61 984

Degrees of protection: IP 55; IP 65 with the appropriate cable glands

		Cross section	Approvals	Wire strip length	Material	Stand. pack
Screw connection	Female insert	6 – 16 mm² 10 – 4 AWG		10 mm	silver-plated	10
	Male insert	6 – 16 mm² 10 – 4 AWG		10 mm	silver-plated	10

Number of poles	Thread	Cable gland type	Stand. pack
Housing size **16** for multipole connectors **4pole + ground**	M 32	0 with cable gland 1 with thread 2 with intermediate support 3 with strain relief	1

Number of poles	Thread	Cable gland type	Stand. pack	Open-bottom housing	Closed-bottom housing with two narrow-side entry cable glands	Closed bottom housing with one narrow-side entry cable gland on the left
				Part no.	Part no.	Part no.
Housing size **16** for multipole connectors **4pole + ground**	M 32	0 with cable gland 1 with thread		71.320.1628.0	76.334.4035.0 76.334.4035.1	76.335.4035.0 76.335.4035.1

revos

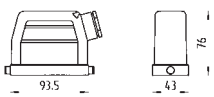

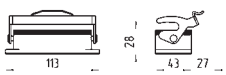

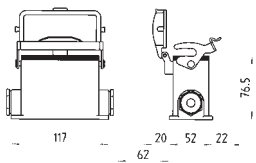

4pole + ground

Pole assignment

Male insert	Female insert
4pole + ground	4pole + ground

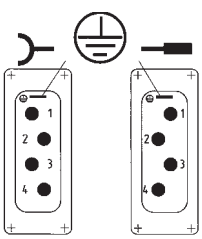

Mounting dimensions and cut-outs for open-bottom housings

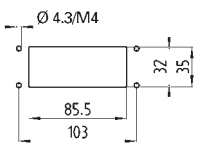

Mounting dimensions for closed-bottom housings

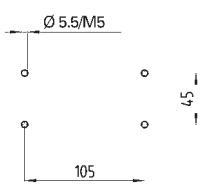

Part no.
72.208.0453.0
72.218.0453.0

Hood	Hood				
Part no.	Part no.				
76.353.4035.0 76.353.4035.1 76.353.4035.2 76.353.4035.3	76.352.4035.0 76.352.4035.1 76.352.4035.2 76.352.4035.3				
Closed-bottom housing with two bottom entry cable glands	Open-bottom housing with protective cover	Closed-bottom housing with two narrow-side entry cable glands and protective cover	Closed-bottom housing with narrow-side entry cable gland on the left and protective cover	Closed-bottom housing with narrow-side entry cable gland on the left and protective cover	Closed-bottom housing with bottom entry cable gland and protective cover
Part no.	Part no.	Part no.	Part no.	Part no.	Part no.
76.337.4035.0 76.337.4035.1	71.325.1628.0	76.344.4035.0 76.344.4035.1	76.345.4035.0 76.345.4035.1	76.346.4035.0 76.346.4035.1	76.347.4035.0 76.347.4035.1

Industrial multipole connectors, female and male inserts, multipole adapters, hoods and housings with double locking levers, 4/6pole

revos POWER

600 V UL/CSA

690 V, 35/16 A IEC 61 984

Degrees of protection: IP 55; IP 65 with the appropriate cable glands

		Cross section	Approvals	Wire strip length	Material	Stand. pack
Screw connection	Female insert 4 poles silver-plated 6 poles tin-plated	2.5 – 6 mm² 14 – 8 AWG 1 – 2.5 mm² 16 – 12 AWG		10 mm 7 mm	silver-plated tin-plated	10
	Male insert 4 poles silver-plated 6 poles tin-plated	2.5 – 6 mm² 14 – 8 AWG 1 – 2.5 mm² 16 – 12 AWG		10 mm 7 mm	silver-plated tin-plated	10
Screw connection Multipole adapter 500 V, 35/16 A IEC 61 984	Female insert, ground right 4 poles silver-plated 6 poles tin-plated	2.5 – 6 mm² 14 – 8 AWG 1.5 – 4 mm² 16 – 12 AWG		12 mm 12 mm	silver-plated tin-plated	10
	Male insert, ground right 4 poles silver-plated 6 poles tin-plated	2.5 – 6 mm² 14 – 8 AWG 1.5 – 4 mm² 16 – 12 AWG		12 mm 12 mm	silver-plated tin-plated	10

Number of poles	Thread	Cable gland type	Stand. pack
Housing size **16** for multipole connectors **4/6pole + ground**	M 25	0 with cable gland 1 with thread 2 with intermediate support 3 with strain relief	1

Number of poles	Thread	Cable gland type	Stand. pack	Open-bottom housing Part no.	Closed-bottom housing with two narrow-side entry cable glands Part no.	Closed bottom housing with one narrow-side entry cable gland on the left Part no.
Housing size **16** for multipole connectors **4/6pole + ground**	M 25		1	72.320.1628.0		
		0 with cable gland	1		72.330.1635.0	72.331.1635.0
		1 with thread	1		72.330.1635.1	72.331.1635.1

revos

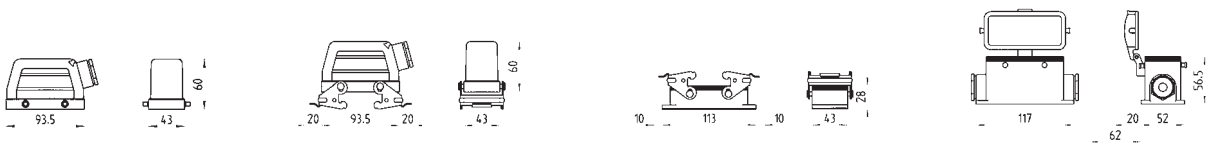

4/ 6pole + ground

Pole assignment

Male insert 4/6pole + ground

Female insert 4/6pole + ground

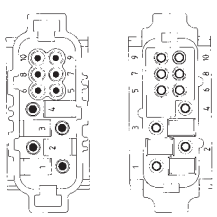

Dimensions of the multipole adapters

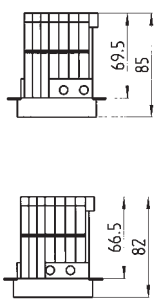

Mounting dimensions and cut-outs for open-bottom housings

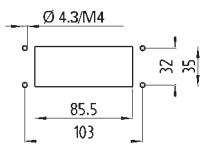

Mounting dimensions for closed-bottom housings

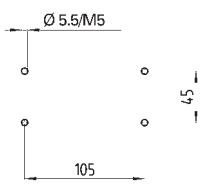

Part no.
72.205.1053.0
72.215.1053.0
72.107.1053.0
72.117.1053.0

Hood	Hood	Hood with locking levers	Hood with locking levers		
Part no.	Part no.	Part no.	Part no.		
72.350.1635.0 72.350.1635.1 72.350.1635.2 72.350.1635.3	72.352.1635.0 72.352.1635.1 72.352.1635.2 72.352.1635.3	72.355.1635.0 72.355.1635.1 72.355.1635.2 72.355.1635.3	72.357.1635.0 72.357.1635.1 72.357.1635.2 72.357.1635.3		

Closed-bottom housing with two bottom entry cable glands	Open-bottom housing with protective cover	Closed-bottom housing with two narrow-side entry cable glands and protective cover	Closed-bottom housing with narrow-side entry cable gland on the left and protective cover	Closed-bottom housing with narrow-side entry cable gland on the left and protective cover	Closed-bottom housing with bottom entry cable gland and protective cover
Part no.	Part no.	Part no.	Part no.	Part no.	Part no.
72.333.1635.0 72.333.1635.1	72.325.1628.0	72.340.1635.0 72.340.1635.1	72.341.1635.0 72.341.1635.1	72.342.1635.0 72.342.1635.1	72.343.1635.0 72.343.1635.1

Industrial multipole connectors, female and male inserts, multipole adapters, hoods and housings with single locking levers, 4/6pole

revos POWER

600 V UL/CSA

690 V, 35/16 A IEC 61 984

Degrees of protection: IP 55; IP 65 with the appropriate cable glands

		Cross section	Approvals	Wire strip length	Material	Stand. pack
Screw connection	Female insert 4 poles silver-plated 6 poles tin-plated	2.5 – 6 mm² 14 – 8 AWG 1 – 2.5 mm² 16 – 12 AWG		10 mm 7 mm	silver-plated tin-plated	10
	Male insert 4 poles silver-plated 6 poles tin-plated	2.5 – 6 mm² 14 – 8 AWG 1 – 2.5 mm² 16 – 12 AWG		10 mm 7 mm	silver-plated tin-plated	10
Screw connection Multipole adapter 500 V, 35/16 A 8 kV/3 VDE 0110	Female insert, ground right 4 poles silver-plated 6 poles tin-plated	2.5 – 6 mm² 14 – 8 AWG 1.5 – 4 mm² 16 – 12 AWG		12 mm 12 mm	silver-plated tin-plated	10
	Male insert, ground right 4 poles silver-plated 6 poles tin-plated	2.5 – 6 mm² 14 – 8 AWG 1.5 – 4 mm² 16 – 12 AWG		12 mm 12 mm	silver-plated tin-plated	10

Number of poles	Thread	Cable gland type	Stand. pack
Housing size**16** for multipole connectors **4/6pole + ground**	M 25	0 with cable gland 1 with thread 2 with intermediate support 3 with strain relief	1

Number of poles	Thread	Cable gland type	Stand. pack	Open-bottom housing Part no.	Closed-bottom housing with two narrow-side entry cable glands Part no.	Closed bottom housing with one narrow-side entry cable gland on the left Part no.
Housing size**16** for multipole connectors **4/6pole + ground**	M 25		1	77.320.1628.0		
		0 with cable gland	1		77.330.1635.0	77.331.1635.0
		1 with thread	1		77.330.1635.1	77.331.1635.1

revos

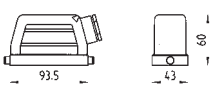

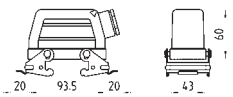

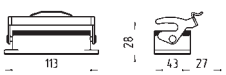

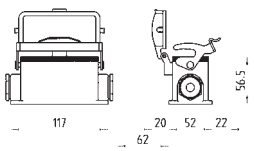

4/6pole + ground

Pole assignment

Male insert 4/6pole + ground

Female insert 4/6pole + ground

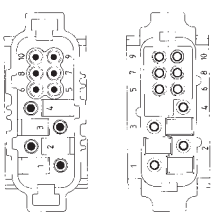

Dimensions of the multipole adapters (shown in mm)

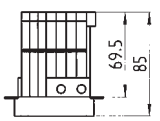

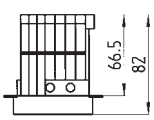

Mounting dimensions and cut-outs for open-bottom housings (shown in mm)

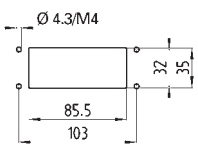

Mounting dimensions for closed-bottom housings

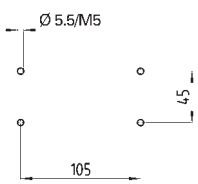

Part no.
72.205.1053.0
72.215.1053.0
72.107.1053.0
72.117.1053.0

Hood	Hood				
Part no.	Part no.				
77.350.1635.0 77.350.1635.1 77.350.1635.2 77.350.1635.3	77.352.1635.0 77.352.1635.1 77.352.1635.2 77.352.1635.3				
Closed-bottom housing with two bottom entry cable glands	Open-bottom housing with protective cover	Closed-bottom housing with two narrow-side entry cable glands and protective cover	Closed-bottom housing with narrow-side entry cable gland on the left and protective cover	Closed-bottom housing with narrow-side entry cable gland on the left and protective cover	Closed-bottom housing with bottom entry cable gland and protective cover
Part no.	Part no.	Part no.	Part no.	Part no.	Part no.
77.333.1635.0 77.333.1635.1	77.325.1628.0	77.340.1635.0 77.340.1635.1	77.341.1635.0 77.341.1635.1	77.342.1635.0 77.342.1635.1	77.343.1635.0 77.343.1635.1

Industrial multipole connectors, female and male inserts, multipole adapters, hoods and housings, 6/6pole

revos POWER

Multipole connectors 40/16 A, with mixed contacts

600 V UL/CSA

690/400 V, 40 A IEC 61 984

400/230 V, 16 A IEC 61 984

Degrees of protection: IP 55; IP 65 with the appropriate cable glands

	Rated current	Cross section	Approvals	Wire strip length	Material	Stand. pack
Screw connection	Female insert					10
	6 poles	40 A 4 – 10 mm² 12 – 6 AWG		10 mm	silver-plated	
	6 poles	16 A 1 – 2.5 mm² 16 – 12 AWG		7 mm	tin-plated	
	Male insert					10
	6 poles	40 A 4 – 10 mm² 12 – 6 AWG		10 mm	silver-plated	
	6 poles	16 A 1 – 2.5 mm² 16 – 12 AWG		7 mm	tin-plated	
Hood with intermediate support						
Number of poles	Thread	Cable gland type				Stand. pack
Housing size**16** for multipole connectors **6/6pole + ground**	M 40	2 with intermediate support				1
Open-bottom housing						
Number of poles						Stand. pack
Housing size**16** for multipole connectors **6/ 6pole + ground**						1

revos

6/6pole + ground

Pole assignment

Male insert 6/6pole + ground

Female insert 6/6pole + ground

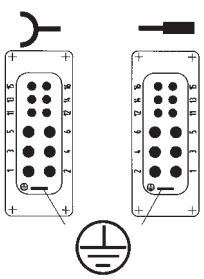

Part no.

72.205.1253.0

72.215.1253.0

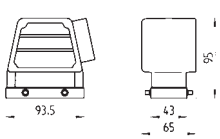

Part no.

72.250.1635.2

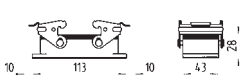

Part no.

72.320.1628.0

Mounting dimensions and cut-outs for open-bottom housings (shown in mm)

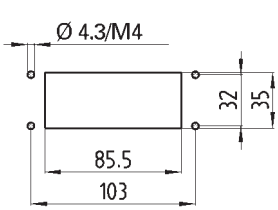

Industrial multipole connectors, female and male inserts, multipole adapters, hoods and housings, 3/3/6pole

revos POWER

Multipole connectors 100/40/16 A, with mixed contacts

600 V UL/CSA
690/400 V

100 A IEC 61 984
40 A IEC 61 984
16 A IEC 61 984

Degrees of protection: IP 55; IP 65 with the appropriate cable glands

	Rated current		Cross section	Approvals	Wire strip length	Material	Stand. pack
Screw connection	Female insert 3 poles 3 poles 6 poles	 100 A 40 A 16 A	 10 – 25 mm² 4 – 10 mm² 1 – 2.5 mm²	 cULus CSA	 14 mm 10 mm 7 mm	 silver-plated silver-plated tin-plated	10
	Male insert 3 poles 3 poles 6 poles	 100 A 40 A 16 A	 10 – 25 mm² 4 – 10 mm² 1 – 2.5 mm²	 cULus CSA	 14 mm 10 mm 7 mm	 silver-plated silver-plated tin-plated	10
Hood with intermediate support							
Number of poles	Thread	Cable gland type					Stand. pack
Housing size **24** for multipole connectors **3/3/6pole + ground**	M 50	2 with intermediate support					1
Open-bottom housing							
Number of poles							Stand. pack
Housing size **24** for multipole connectors **3/3/6pole + ground**							1

revos

3/3/6pole + ground

Pole assignment

Male insert 3/3/6pole + ground

Female insert 3/3/6pole + ground

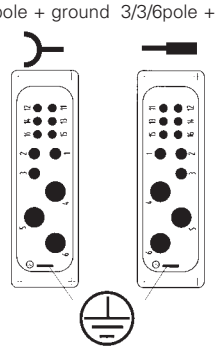

Part no.

72.203.1253.0

72.213.1253.0

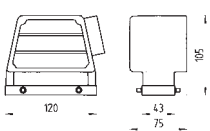

Part no.

72.250.2435.2

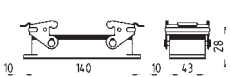

Part no.

72.320.2428.0

Mounting dimensions and cut-outs for open-bottom housings (shown in mm)

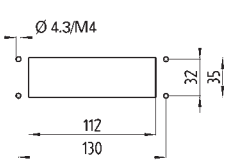

Industrial multipole connectors, female and male inserts, hoods and housings with single locking levers, 4/2pole

revos POWER

Multipole connectors 82/16 A, with mixed contacts

600 V UL/CSA

690 V **82 A** IEC 61 984 (**70 A** CSA)

400 V **16 A** IEC 61 984

Degrees of protection: IP 55; IP 65 with the appropriate cable glands

	Rated current	Cross section	Approvals	Wire strip length	Material	Stand. pack
Screw connection	Female insert					10
	4 poles 82 A (70 A CSA)	6 – 16 mm² 10 – 4 AWG		15 mm	silver-plated	
	2 poles 16 A	1 – 2.5 mm² 16 – 12 AWG		9 mm	tin-plated	
	Male insert					10
	4 poles 82 A(70 A CSA)	6 – 16 mm² 10 – 4 AWG		15 mm	silver-plated	
	2 poles 16 A	1 – 2.5 mm² 16 – 12 AWG		9 mm	tin-plated	

Number of poles	Thread	Cable gland type	Stand. pack
Housing size**16** for multipole connectors **4/2pole + ground**	M 32	0 with cable gland 1 with thread 2 with intermediate support 3 with strain relief	1

Number of poles	Thread	Cable gland type	Stand. pack	Open-bottom housing	Closed-bottom housing with two narrow-side entry cable glands	Closed bottom housing with one narrow-side entry cable gland on the left
Housing size**16**			1	71.320.1628.0		
for multipole connectors	M 32	0 with cable gland	1		76.334.4035.0	76.335.4035.0
4/2pole + ground		1 with thread	1		76.334.4035.1	76.335.4035.1

revos

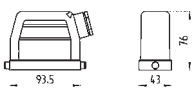

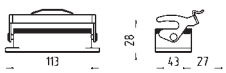

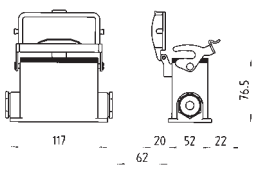

4/2pole + ground

Pole assignment

Male insert
4/2pole + ground

Female insert
4/2pole + ground

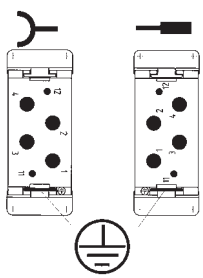

Mounting dimensions and cut-outs for open-bottom housings (shown in mm)

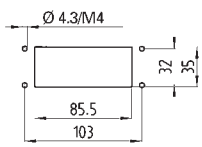

Mounting dimensions for closed-bottom housings (shown in mm)

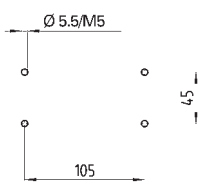

Part no.					
72.205.0653.0					
72.215.0653.0					
Hood	Hood				
Part no.	Part no.				
76.353.4035.0 76.353.4035.1 76.353.4035.2 76.353.4035.3	76.354.4035.0 76.354.4035.1 76.354.4035.2 76.354.4035.3				
Closed-bottom housing with two bottom entry cable glands	Open-bottom housing with protective cover	Closed-bottom housing with two narrow-side entry cable glands and protective cover	Closed-bottom housing with narrow-side entry cable gland on the left and protective cover	Closed-bottom housing with narrow-side entry cable gland on the left and protective cover	Closed-bottom housing with bottom entry cable gland and protective cover
Part no.	Part no.	Part no.	Part no.	Part no.	Part no.
76.337.4035.0 76.337.4035.1	71.325.1628.0	76.344.4035.0 76.344.4035.1	76.345.4035.0 76.345.4035.1	76.346.4035.0 76.346.4035.1	76.347.4035.0 76.347.4035.1

Industrial multipole connectors, female and male inserts, hoods and housings with double locking levers, 4/2pole

revos POWER

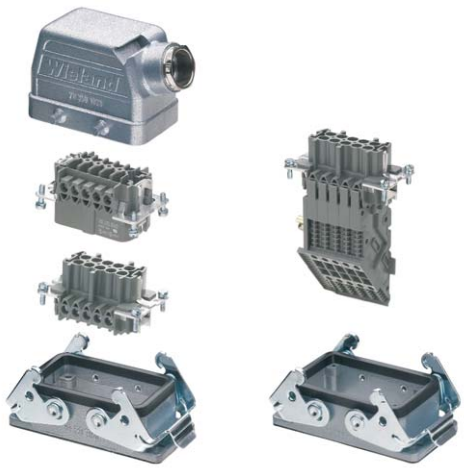

Multipole connectors 82/16 A, with mixed contacts

600 V UL/CSA
690 V **82 A** IEC 61 984 (70 A CSA)
400 V **16 A** IEC 61 984

Degrees of protection: IP 55; IP 65 with the appropriate cable glands

	Rated current		Cross section	Approvals	Wire strip length	Material	Stand. pack
Screw connection	Female insert						10
	4 poles	82 A (70 A CSA)	6 – 16 mm²	10 – 4 AWG		15 mm	silver-plated
	2 poles	16 A	1 – 2.5 mm²	16 – 12 AWG		9 mm	tin-plated
	Male insert						10
	4 poles	82 A (70 A CSA)	6 – 16 mm²	10 – 4 AWG		15mm	silver-plated
	2 poles	16 A	1 – 2.5 mm²	16 – 12 AWG		9 mm	tin-plated

Number of poles	Thread	Cable gland type	Stand. pack
Housing size**16** for multipole connectors **4/2pole + ground**	M 32	0 with cable gland 1 with thread 2 with intermediate support 3 with strain relief	1

Number of poles	Thread	Cable gland type	Stand. pack	Open-bottom housing Part no.	Closed-bottom housing with two narrow-side entry cable glands Part no.	Closed bottom housing with one narrow-side entry cable gland on the left Part no.
Housing size**16** for multipole connectors **4/2pole + ground**	M 32		1	70.320.1628.0		
		0 with cable gland	1		73.334.4035.0	73.335.4035.0
		1 with thread	1		73.334.4035.1	73.335.4035.1

revos

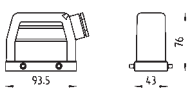

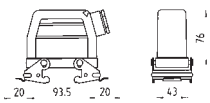

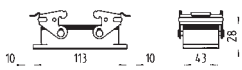

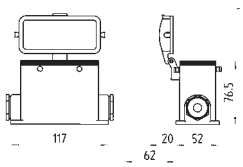

4/2pole + ground

Pole assignment

Male insert 4/2pole + ground

Female insert 4/2pole + ground

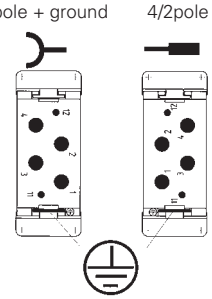

Mounting dimensions and cut-outs for open-bottom housings (shown in mm)

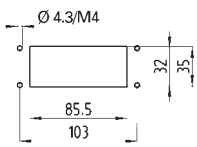

Mounting dimensions for closed-bottom housings (shown in mm)

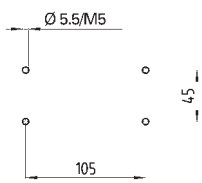

Hood	Hood	Hood with locking levers	Hood with locking levers		
Part no.	Part no.	Part no.	Part no.		
73.353.4035.0 73.353.4035.1 73.353.4035.2 73.353.4035.3	73.352.4035.0 73.352.4035.1 73.352.4035.2 73.352.4035.3	73.358.4035.0 73.358.4035.1 73.358.4035.2 73.358.4035.3	73.357.4035.0 73.357.4035.1 73.357.4035.2 73.357.4035.3		
Closed-bottom housing with two bottom entry cable glands	Open-bottom housing with protective cover	Closed-bottom housing with two narrow-side entry cable glands and protective cover	Closed-bottom housing with narrow-side entry cable gland on the left and protective cover	Closed-bottom housing with narrow-side entry cable gland on the left and protective cover	Closed-bottom housing with bottom entry cable gland and protective cover
Part no.	Part no.	Part no.	Part no.	Part no.	Part no.
73.337.4035.0 73.337.4035.1	70.325.1628.0	73.344.4035.0 73.344.4035.1	73.345.4035.0 73.345.4035.1	73.346.4035.0 73.346.4035.1	73.347.4035.0 73.347.4035.1

revos MINI

Technical information

■ **Approvals**	UL, CSA, SEV
■ **Applicable standards**	IEC 61 984
■ **Contact inserts**	
Rated current	10 A
Rated voltage	
– 3pole + ground in plastic housing	400 V
– 3pole + ground in metal housing	250/400 V
– 4pole + ground (plastic and metal housing)	400 V
– 7pole + ground in plastic housing	250 V
– 7pole + ground in metal housing	50 V
– 8pole (plastic and metal housing)	50 V
Nominal voltage accord. to UL/CSA	
– 3/4pole + ground (plastic and metal housing)	600 V
– 7pole + ground in plastic housing	600 V
– 7pole + ground in metal housing	42 V
– 8pole + ground (plastic and metal housing)	42 V
Pole configurations	3, 4, 7 + ground, 8
Screw connection	0.5 – 2.5 mm^2 / 22 – 12 AWG
Crimp connection	0.2 – 1.5 mm^2 / 24 – 16 AWG
Degree of pollution	3
Temperature range	–40 to +110 °C
■ **Contacts**	
Material	copper alloy
Surface	tin-plated, gold-plated, silver-plated
■ **Hoods and housings**	
Material	die cast aluminum alloy Thermoplast
Surface	gray
Locking levers	zinc-plated steel
Gaskets	NBR
Temperature range	–40 to +110 °C
Degree of protection accord. to DIN EN 60 529	
with latched locking levers	IP 54
with suitable cable gland	IP 65

revos

Industrial Multipole Connectors

Industrial multipole connectors
3/4/7pole + ground / 8pole

revos MINI

600 V UL/CSA

250 V, 10 A IEC 61 984

Degrees of protection: IP 54; IP 65 with the appropriate cable glands

		Cross section	Approvals	Wire strip length	Material	Stand. pack
Screw connection	Female insert	0.5 – 2.5 mm² 3pole 18 – 16 AWG UL 4pole 22 – 12 AWG UL 3-/4pole 22 – 12 AWG CSA	* for 3 pole	4 mm	tin-plated (3pole) silver-plated (4pole)	10
	Male insert	0.5 – 2.5 mm² 3pole 18 – 16 AWG UL 4pole 22 – 12 AWG UL 3-/4pole 22 – 12 AWG CSA	* for 3 pole	4 mm	tin-plated (3pole) silver-plated (4pole)	10
Crimp connection	Female insert without crimp contacts	0.2 – 1.5 mm² 18 – 16 AWG UL 24 – 16 AWG CSA		4 mm		10
	Male insert without crimp contacts	0.2 – 1.5 mm² 18 – 16 AWG UL 24 – 16 AWG CSA		4 mm		10

	Thread size		Cable gland type	Material	Stand. pack
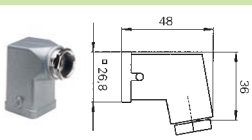	M 20	Hood, angled	0 with cable gland 1 with thread 1 with thread	Metal Metal Plastic	10 10 10
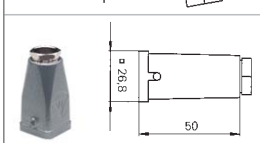	M 20	Hood, straight	0 with cable gland 1 with thread 1 with thread	Metal Metal Plastic	10 10 10
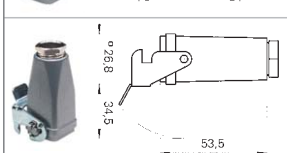	M 20	Hood, with clip for cable to cable couplings	0 with complete cable gland 1 with thread 1 with thread	Metal Metal Plastic	10 10 10
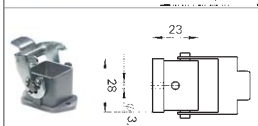		Open-bottom housing		Metal Plastic	10 10
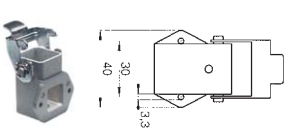		Open-bottom housing, angled		Metal Plastic	10 10
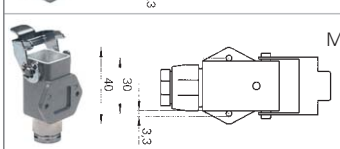	M 20	Closed-bottom housings The closed-bottom housing in plastic material is supplied without gland	0 with cable gland 1 with thread 1 with thread	Metal Metal Plastic	10 10 10

revos

Contacts for crimp version

Female contacts

Male contacts

Ø mm²	AWG	Part no.	Stand. pack
0.2 – 0.56 mm²	24 – 20	tin-plated	
Reel contacts		02.124.0900.0	5000
Single contacts		02.124.0929.0	200
0.75 – 1.50 mm²	18 – 16		
Reel contacts		02.124.1000.0	5000
Single contacts		02.124.1029.0	200
0.2 – 0.56 mm²	24 – 20		
Reel contacts		05.544.0900.0	5000
Single contacts		05.544.0929.0	200
0.75 – 1.50 mm²	18 – 16		
Reel contacts		05.544.1000.0	5000
Single contacts		05.544.1029.0	200

Ø mm²	AWG	Part no.	Stand. pack
0.5 – 1.50 mm²	24 – 20	gold-plated	
Reel contacts		02.124.1400.0	5000
Single contacts		02.124.1429.0	200
0.5 – 1.50 mm²	20 – 16		
Reel contacts		05.544.1400.0	5000
Single contacts		05.544.1429.0	200
Crimping tool		95.101.0800.0	1
Crimping die "E"		05.502.2400.0	1
Contact positioner "2"		05.502.3200.0	1
Extraction tool		05.502.0000.0	1

3pole + ground	4pole + ground	7pole + ground	8pole
Plastic housing UL/CSA 400 V/4 kV, 10 A 600 V **Metal housing** 250 V/400 V/4 kV, 10 A 600V	**Plastic housing** UL/CSA 250 V/4 kV, 10 A 600 V **Metal housing** 250 V/4 kV, 10 A 600 V	**Plastic housing** UL/CSA 250 V/4 kV, 10 A 600 V **Metal housing** 50 V/0,8 kV, 10 A 42 V	**Plastic housing** UL/CSA 50 V/0,8 kV, 10 A 42 V **Metal housing** 50 V/0,8 kV, 10 A 42 V
Part no.	Part no.	Part no.	Part no.
73.300.0353.0	73.300.0453.0		
73.310.0353.0	73.310.0453.0		
		73.700.0753.0	73.700.0853.0
		73.710.0753.0	73.710.0853.0
76.350.0736.0 76.350.0736.1 76.350.0760.1	76.350.0736.0 76.350.0736.1 76.350.0760.1	76.350.0736.0 76.350.0736.1 76.350.0760.1	76.350.0736.0 76.350.0736.1 76.350.0760.1
76.352.0736.0 76.352.0736.1 76.352.0760.1	76.352.0736.0 76.352.0736.1 76.352.0760.1	76.352.0736.0 76.352.0736.1 76.352.0760.1	76.352.0736.0 76.352.0736.1 76.352.0760.1
76.372.0736.0 76.372.0736.1 76.372.0760.1	76.372.0736.0 76.372.0736.1 76.372.0760.1	76.372.0736.0 76.372.0736.1 76.372.0760.1	76.372.0736.0 76.372.0736.1 76.372.0760.1
76.320.0729.0 76.320.0753.0	76.320.0729.0 76.320.0753.0	76.320.0729.0 76.320.0753.0	76.320.0729.0 76.320.0753.0
76.321.0729.0 76.321.0753.0	76.321.0729.0 76.321.0753.0	76.321.0729.0 76.321.0753.0	76.321.0729.0 76.321.0753.0
76.322.0736.0 76.322.0736.1 76.322.0760.1	76.322.0736.0 76.322.0736.1 76.322.0760.1	76.322.0736.0 76.322.0736.1 76.322.0760.1	76.322.0736.0 76.322.0736.1 76.322.0760.1

Accessories

Part no.	Part no.
Cover with locking-bolts for housing and hood with locking levers without gasket for male insert	Cover with locking-bolts for housing and hood with locking levers with gasket for female insert
Plastic 07.417.6753.0 Metal 07.417.6729.0	Plastic 07.417.6853.0 Metal 07.417.6829.0

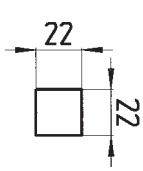

Mounting dimensions and cut-outs for open-bottom housings (shown in mm)

revos HD

Technical information

Approvals	UL, CSA, MEEI, SEV
Applicable standards	IEC 61 984, DIN EN 175301-801
Contact inserts	
Rated current	10 A
Rated voltage	250 V
Nominal voltage accord. to UL	600 V
Nominal voltage accord. to CSA	600 V
Pole configurations	15, 25, 40, 64pole
Crimp connection	0.2 – 1.5 mm^2 / 24 – 16 AWG
Degree of pollution	3
Temperature range	–40 to +110 °C
Multipole adapter	
Rated current	10 A
Rated voltage	250 V
Nominal voltage accord. to UL	600 V
Nominal voltage accord. to CSA	600 V
Pole configurations	40, 64pole + ground
Screw connection	0.5 – 4.0 mm^2 / 20 – 14 AWG
Degree of pollution	3
Temperature range	–40 to +110 °C
Contacts	
Material	copper alloy
Surface	tin-plated, gold-plated, silver-plated
Hoods and housings	
Material	die cast aluminum alloy Thermoplast
Surface	silver gray, silicon-free finish
Locking levers	zinc-plated steel
Gaskets	NBR
Temperature range	–40 to +110 °C
Degree of protection accord. to DIN EN 60 529	
with latched locking levers	IP 55
with suitable cable gland	IP 65

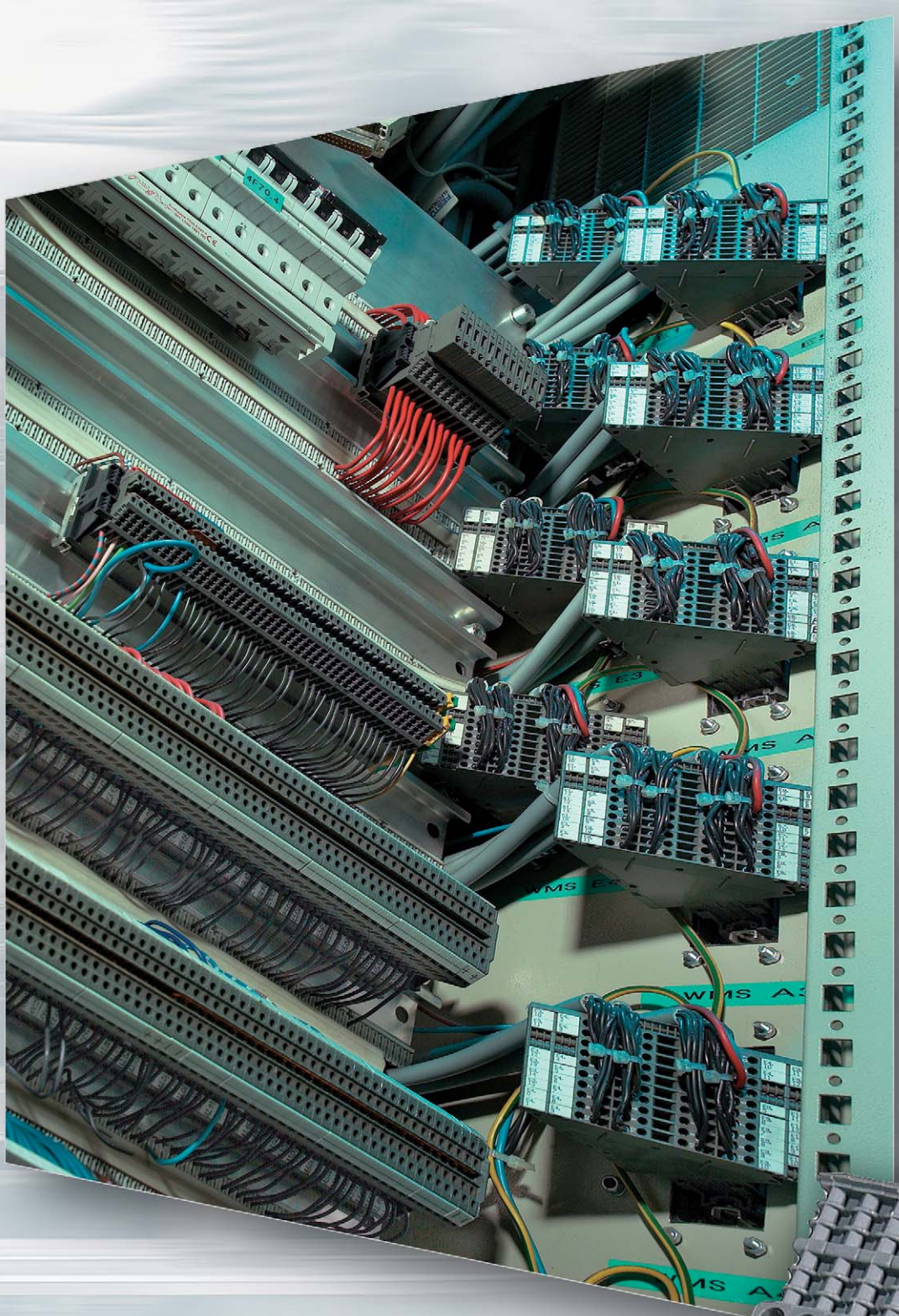

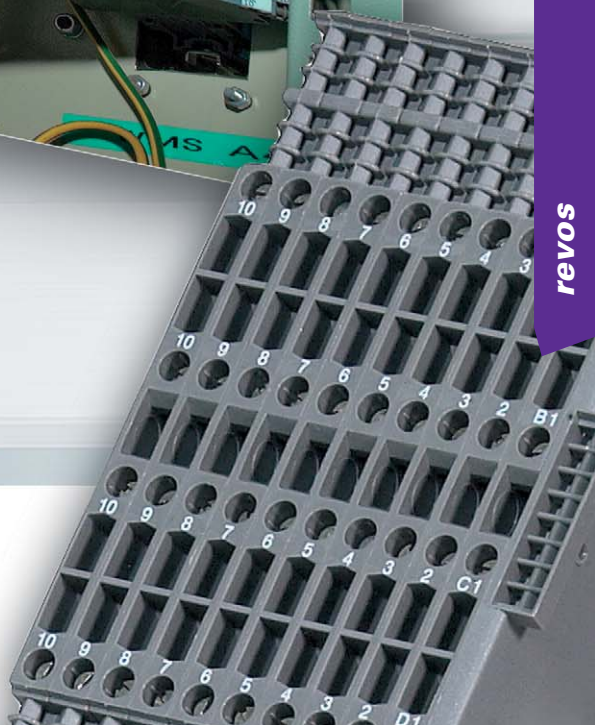

revos

Industrial Multipole Connectors

High density multipole connectors according to DIN EN 175301-801

revos HD

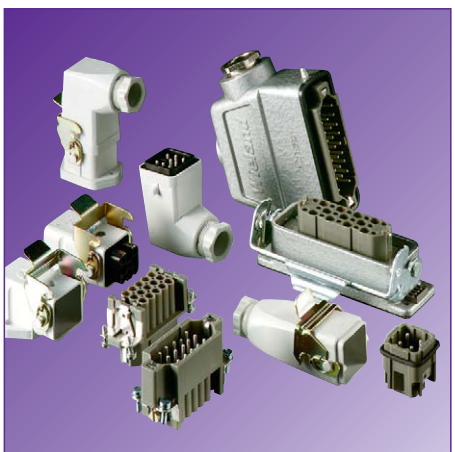

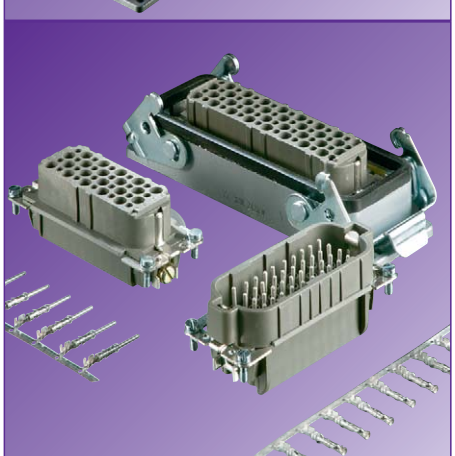

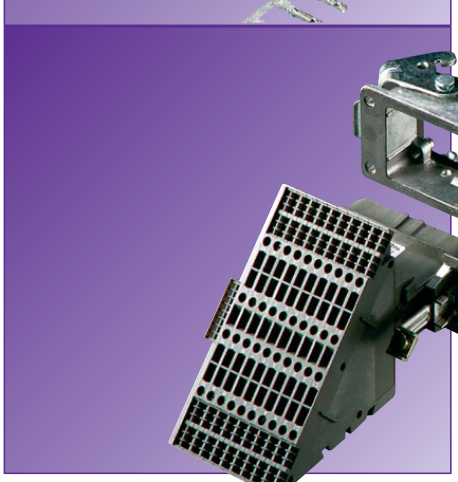

System description

- ❒ For use in machine construction, control and switchgear building
- ❒ Reliable connector elements for power and control current lines
- ❒ Outstanding feature: a robust die cast aluminum housing
- ❒ Protection of the internal contact-inserts against mechanical and hazardous industrial influences
- ❒ According to EN 60529 and IEC 60 529, the interlocked hoods and housings provide the following degrees of protection:
  IP 65 (dust ingress and jet-water)
  IP 55 (dust deposit and splashwater)
- ❒ High contact density

Multipole adapter

- ❒ Space-saving connection element for heavy industrial multipole connectors
- ❒ Consists of: Multipole connector, contact insert and attached feedthrough terminal
- ❒ Multipole adapters are available with female or male connector inserts
- ❒ Provided as preassembled unit which can be mounted to the control cabinet wall
- ❒ Easy handling: slide the multipole adapter to the housing and mount it with screws
- ❒ TOP connection design also available

- ❒ Clearly identified and easily accessible clamping points
- ❒ The angled connection zone and the TOP connection facility enable clamping and testing of all connections even when the components are plugged together
- ❒ Each connection can be marked with 4 or. 6 digits

Further benefits:

- ❒ Safe and time-saving wiring
- ❒ Testing is possible even when the components are plugged together, meaning that the power circuit need not be interrupted for testing
- ❒ Small-sized components helpto reduce control cabinet space
- ❒ Potential commoning due to an insulated jumper bar
- ❒ Variable marking facilities
- ❒ Coding by means of coding pieces and coding bolts
- ❒ No mismated connections

Female and male connector inserts

- ❒ Mounted in the direction of the power flow (female insert is live)
- ❒ No mismating due to the special design of the female and male inserts
- ❒ Consecutive numbers both on the contact and on the connection sides
- ❒ Mixed contacts possible
- ❒ Due to an integrated screwdriver guide, both electric and pneumatic screwdrivers can be used

Crimp connection

- ❒ Snap-in crimp contacts for high density applications
- ❒ Corrosion-resistant due to gas-tight connections (cold welding)
- ❒ Constant feed through resistance
- ❒ Rapid mounting
- ❒ Crimp contacts safely latch into the female and male inserts
- ❒ flared, closed cable entries protect the female contacts against possible damaging
- ❒ Connected contacts can only be released with a special tool
- ❒ Reel contacts available for automatic crimping machines

revos

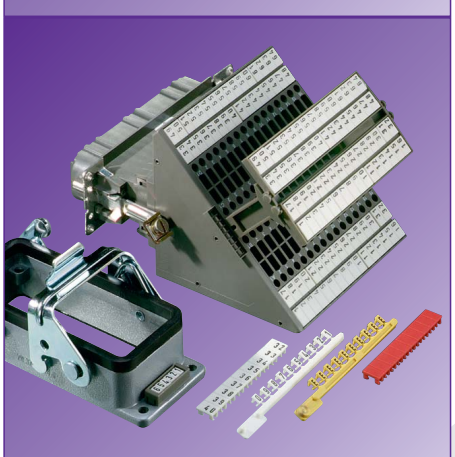

Latching frames (see page 674)

- ❒ Housing: contact inserts to be latched in sheet metal cut-out
- ❒ Hood: contact inserts available either with or without strain relief with/without locking mechanism
- ❒ No metal housings
- ❒ Cable to cable couplings with two hoods
- ❒ Multipole adapter with contact insert can be latched in sheet metal cut-out or mounted to a rail by means of a universal foot

❒ Technical information:

Female and male connector inserts

Screw connection:	2.5 mm²
	12 AWG UL/CSA
Crimp connection:	0.5 - 4 mm²
	20 – 12 AWG UL/CSA
Number of poles:	40, 64
Rated voltage VDE:	250 V
Rated voltage UL/CSA:	600 V
Rated current:	10 A

Crimping machine

- ❒ Wire stripping and crimping in one step
- ❒ Manual infeed of the cable material
- ❒ Automatic stripping and crimping
- ❒ Infeed of the female and male contacts on reels (0.2 – 1.5 mm² / 24 – 16 AWG)
- ❒ The machine can be used for various applications, as the tool inserts are exchanged easily
- ❒ Available tool inserts:
  - for ST 18-connectors
  - for industrial multipole connectors
  - for high density multipole connectors
- ❒ The female and male contacts are available in cross sections between 0.2 mm² and 1.5 mm² 24 – 16 AWG
- ❒ Cross section is marked on the female and male contacts

For ordering see ***facts*** & DATA

Crimping tool

- ❒ Special crimping tool required for the high density Wieland contacts
- ❒ Interlock protects against inadvertant opening
- ❒ Contact positioner for female and male contacts available

For ordering see ***facts*** & DATA

Marking accessories

- ❒ 6digit marking tag carrier for open-bottom housings
- ❒ The connection points can be marked with single tags or via tear-off marking strips with 6 digits each

Material

Housing:

- ❒ Hood/housing: die cast aluminum alloy, silicon-free finish, silver gray

Female and male connector inserts:

- ❒ Insulating parts made from fiberglass reinforced Polyamide (technical information: see ***facts*** & DATA)

DQS certificates for all product families

- ❒ Quality standard as per DIN ISO 9001
- ❒ in Development, Production, Assembly
- ❒ Continued control of the quality standards by means of regular internal and external quality audits
- ❒ Compatible with certificates of other countries:
  - BSI Certificate, Great Britain
  - SQS Certificate, Switzerland
  - Aib-Vincotte Certificate, Belgium
  - ÖQS Certificate, Austria

Note:

The information regarding cross sectional area and connection types pertains to unprepared wires without ferrules.

The voltage ratings apply to the terminals in their intended application.

The official installation standards are to be followed. When the components are mounted into devices, the relevant device instructions apply.

Special installation conditions of the customers are not considered. For more detailed information on the specific component characteristics see ***facts*** & DATA.

DQS DIN EN ISO 9001
QUALITÄTSSICHERUNG
Reg.-Nr. 14 194-02

Industrial multipole connectors
Female/male inserts and multipole adapters

revos HD

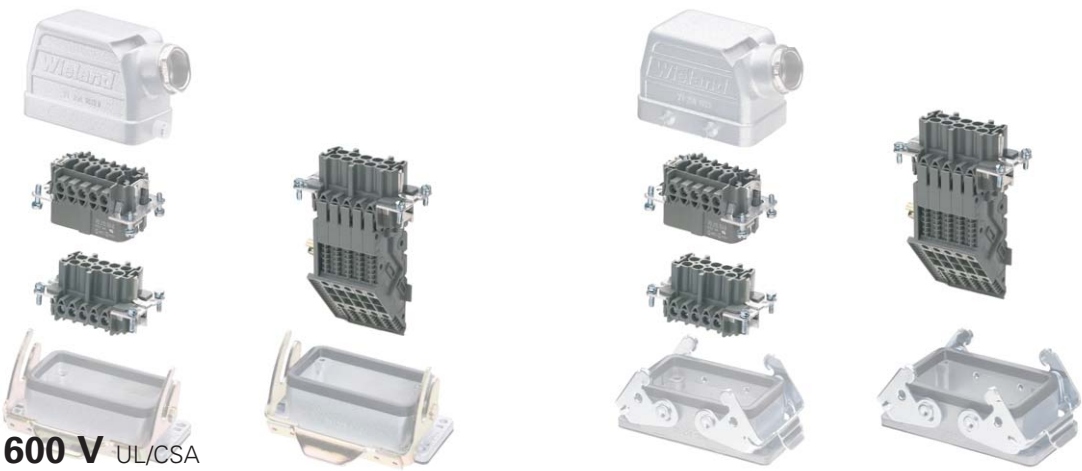

600 V UL/CSA

250 V, 10 A IEC 61 984

		Cross section	Approvals	Wire strip length	Material	Stand. pack
Crimp connection	Female insert without crimp contacts	0.2 – 1.5 mm² 24 – 16 AWG		4 mm		10
	Male insert without crimp contacts	0.2 – 1.5 mm² 24 – 16 AWG		4 mm		10
Screw connection Multipole adapter	Female insert, ground right	0.5 – 2.5 mm² 20 – 14 AWG		12 mm	tin-plated	4 2
	Female insert, ground left	0.5 – 2.5 mm² 20 – 14 AWG		12 mm	tin-plated	4 2
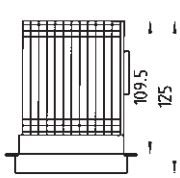	Male insert, ground right	0.5 – 2.5 mm² 20 – 14 AWG		12 mm	tin-plated	4 2
	Male insert, ground left	0.5 – 2.5 mm² 20 – 14 AWG		12 mm	tin-plated	4 2

revos

Contacts for crimp version

Female contacts

Male contacts

Crimping tool
Crimping die "E"
Contact positioner "2"
Extraction tool

Ø mm²	AWG	Part no.	Stand. pack
0.2 – 0.56 mm²	24 – 20	tin-plated	
Reel contacts		02.124.0900.0	5000
Single contacts		02.124.0929.0	200
0.75 – 1.50 mm²	18 – 16		
Reel contacts		02.124.1000.0	5000
Single contacts		02.124.1029.0	200
0.2 – 0.56 mm²	24 – 20		
Reel contacts		05.544.0900.0	5000
Single contacts		05.544.0929.0	200
0.75 – 1.50 mm²	18 – 16		
Reel contacts		05.544.1000.0	5000
Single contacts		05.544.1029.0	200

Ø mm²	AWG	Part no.	Stand. pack
0.5 – 1.50 mm²	20 – 16	gold-plated	
Reel contacts		02.124.1400.0	5000
Single contacts		02.124.1429.0	200
0.5 – 1.50 mm²	20 – 16		
Reel contacts		05.544.1400.0	5000
Single contacts		05.544.1429.0	200
Crimping tool		95.101.0800.0	1
Crimping die "E"		05.502.2400.0	1
Contact positioner "2"		05.502.3200.0	1
Extraction tool		05.502.0000.0	1

15pole + ground	25pole + ground	40pole + ground	64pole + ground
Part no.	Part no.	Part no.	Part no.
73.700.1553.0	73.700.2553.0	73.700.4058.0	73.700.6458.0
73.710.1553.0	73.710.2553.0	73.710.4058.0	73.710.6458.0
		73.105.4053.0	73.105.6453.0
		73.100.4053.0	73.100.6453.0
		73.115.4053.0	73.115.6453.0
		73.110.4053.0	73.110.6453.0

40pole multipole adapter

a) = operating current
b) = maximum operating current
c) = ambient temperature
d) = conductor cross section
e) = number of loaded contacts

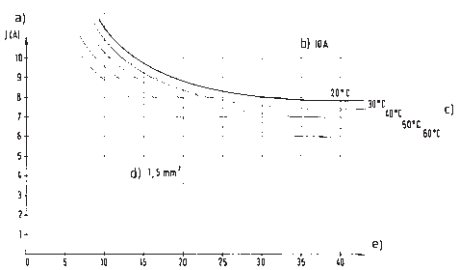

64pole multipole adapter

a) = operating current
b) = maximum operating current
c) = ambient temperature
d) = conductor cross section
e) = number of loaded contacts

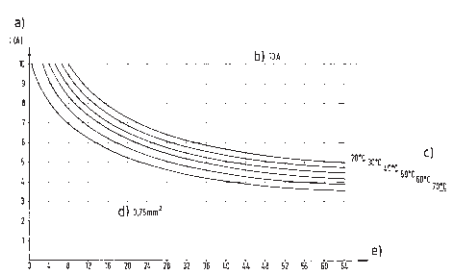

revos

Industrial multipole connectors
Hoods with single locking levers

revos HD

Version A

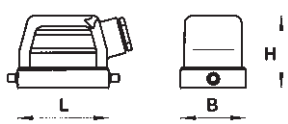

Version C

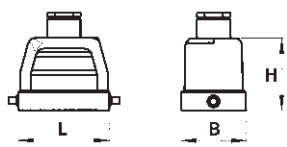

For inserts **600 V** UL/CSA

For inserts **250 V** IEC 61 984

DIN EN 175301-801
Degrees of protection: IP 55
IP 65 with the appropriate cable glands

Number of poles	Thread	Cable gland type	Dimensions in mm	L	W	H	Stand. pack
Size**15** for multipole connectors **15pole + ground**	M 20	0 with cable gland 1 with threaded collar 2 with intermediate support		63	33	64	1
	M 25	0 with cable gland 1 with threaded collar 2 with intermediate support		63	33	64	1
Size **25** for multipole connectors **25pole + ground**	M 20	0 with cable gland 1 with threaded collar 2 with intermediate support		79.5	33	70	1
	M 25	0 with cable gland 1 with threaded collar 2 with intermediate support		79.5	33	70	1
Size **16** for multipole connectors **40pole + ground**	M 25	0 with cable gland 1 with threaded collar 2 with intermediate support 3 with strain relief		93.5	43	76	1
	M 32	0 with cable gland 1 with threaded collar 2 with intermediate support 3 with strain relief		93.5	43	76	1
Size **24** for multipole connectors **64pole + ground**	M 25	0 with cable gland 1 with threaded collar 2 with intermediate support 3 with strain relief		120	43	76	1
	M 32	0 with cable gland 1 with threaded collar 2 with intermediate support 3 with strain relief		120	43	76	1

revos

Hood with cable gland Version A 	Hood with cable gland Version C
Part no.	Part no.
76.350.1535.0 76.350.1535.2	76.352.1535.0 76.352.1535.1 76.352.1535.2
76.353.1535.0 76.353.1535.2	76.354.1535.0 76.354.1535.1 76.354.1535.2
76.350.2535.0 76.350.2535.2	76.352.2535.0 76.352.2535.1 76.352.2535.2
76.353.2535.0 76.353.2535.2	76.354.2535.0 76.354.2535.1 76.354.2535.2
76.350.4035.0 76.350.4035.1 76.350.4035.2 76.350.4035.3	76.352.4035.0 76.352.4035.1 76.352.4035.2 76.352.4035.3
76.353.4035.0 76.353.4035.1 76.353.4035.2 76.353.4035.3	76.354.4035.0 76.354.4035.1 76.354.4035.2 76.354.4035.3
76.350.6435.0 76.350.6435.1 76.350.6435.2 76.350.6435.3	76.352.6435.0 76.352.6435.1 76.352.6435.2 76.352.6435.3
76.353.6435.0 76.353.6435.1 76.353.6435.2 76.353.6435.3	76.354.6435.0 76.354.6435.1 76.354.6435.2 76.354.6435.3

Industrial multipole connectors
Housings with single locking levers, without protective cover

revos HD

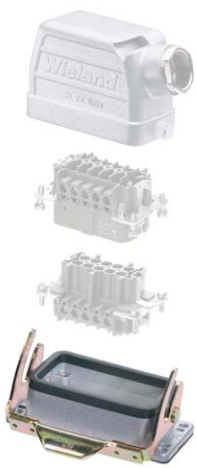

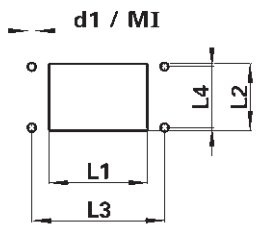

Mounting dimensions and cut-outs for open-bottom housings

Housing size	Cut-out (mm)		Mounting dimensions (mm)		d1 (mm)	MI
	L1	L2	L3	L4		
15	56	23	70	17.5	3.3	M 3
25	72	23	86	17.5	4.3	M 4
16	83.5	35	103	32	4.3	M 4
24	112	35	130	32	4.3	M 4

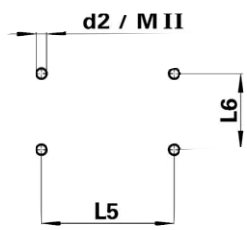

Mounting dimensions for closed-bottom housings

Housing size	L5 (mm)	L6 (mm)	d2 (mm)	MII
15	48	40	4.3	M 4
25	64	40	5.5	M 5
16	105	45	5.5	M 5
24	132	45	5.5	M 5

For inserts **600 V** UL/CSA

For inserts **250 V** IEC 61 984

DIN EN 175301-801
Degrees of protection: IP 55
IP 65 with the appropriate cable glands

Number of poles	Thread	Cable gland type	Dimensions in mm	L	W	H	Stand. pack
Size**15** for multipole connectors	M 20	0 with cable gland		81	30	25.7	1
		1 with threaded collar		81	50	52.5	1
15pole + ground				81	50	52.5	1
	M 25	0 with cable gland		81	50	52.5	1
		1 with threaded collar		81	50	52.5	1
Size **25** for multipole connectors	M 20	0 with cable gland		96	30	25.7	1
		1 with threaded collar		95.7	50	57.5	1
25pole + ground				95.7	50	57.5	1
	M 25	0 with cable gland		95.7	50	57.5	1
		1 with threaded collar		95.7	50	57.5	1
Size **16** for multipole connectors	M 25	0 with cable gland		113	43	28	1
		1 with threaded collar		117	52	76.5	1
40pole + ground				117	52	76.5	1
	M 32	0 with cable gland		117	52	76.5	1
		1 with threaded collar		117	52	76.5	1
Size **24** for multipole connectors	M 25	0 with cable gland		140	43	28	1
		1 with threaded collar		144	52	76.5	1
64pole + ground				144	52	76.5	1
	M 32	0 with cable gland		144	52	76.5	1
		1 with threaded collar		144	52	76.5	1

revos

Version a

Version b

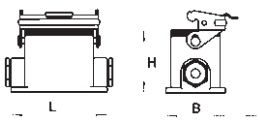

Version c

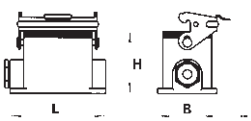

Version d

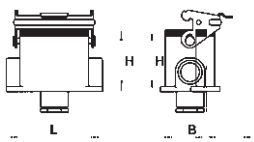

Open-bottom housing Version a 	Closed-bottom housing with two narrow-side entry cable glands Version b 	Closed bottom housing with one narrow-side entry cable gland on the left Version c 	Closed-bottom housing with bottom entry cable gland Version d 	Open-bottom housing with locking ridges for multipole adapters Version a 	
Part no.	Part no.	Part no.	Part no.	Part no.	
76.320.1528.0	76.330.1535.0 76.330.1535.1	76.331.1535.0 76.331.1535.1			
	76.334.1535.0 76.334.1535.1	76.335.1535.0 76.335.1535.1			
76.320.2528.0	76.330.2535.0 76.330.2535.1	76.331.2535.0 76.331.2535.1			
	76.334.2535.0 76.334.2535.1	76.335.2535.0 76.335.2535.1			
71.320.1628.0	76.330.4035.0 76.330.4035.1	76.331.4035.0 76.331.4035.1	76.333.4035.0 76.333.4035.1	76.326.4028.0	
	76.334.4035.0 76.334.4035.1	76.335.4035.0 76.335.4035.1	76.337.4035.0 76.337.4035.1		
71.320.2428.0	76.330.6435.0 76.330.6435.1	76.331.6435.0 76.331.6435.1	76.333.6435.0 76.333.6435.1	76.326.6428.0	
	76.334.6435.0 76.334.6435.1	76.335.6435.0 76.335.6435.1	76.337.6435.0 76.337.6435.1		

Industrial multipole connectors
Housings with single locking levers and protective cover

revos HD

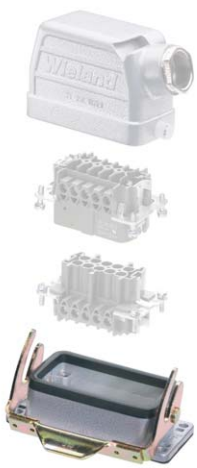

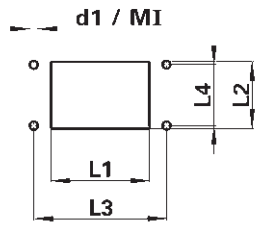

Mounting dimensions and cut-outs for open-bottom housings

Housing size	Cut-out (mm)		Mounting dimensions (mm)		d1 (mm)	MI
	L1	L2	L3	L4		
15	56	23	70	17.5	3.3	M 3
25	72	23	86	17.5	4.3	M 4
16	83.5	35	103	32	4.3	M 4
24	112	35	130	32	4.3	M 4

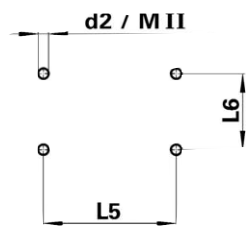

Mounting dimensions for closed-bottom housings

Housing size	L5 (mm)	L6 (mm)	d2 (mm)	MII
15	48	40	4.3	M 4
25	64	40	5.5	M 5
16	105	45	5.5	M 5
24	132	45	5.5	M 5

For inserts **600 V** UL/CSA

For inserts **250 V** IEC 61 984

DIN EN 175301-801
Degrees of protection: IP 55
IP 65 with the appropriate cable glands

Number of poles	Thread	Cable gland type	Dimensions in mm	L	W	H	Stand. pack
Size**15** for multipole connectors				81	30	25.7	1
15pole + ground							
Size **25** for multipole connectors				96	30	25.7	1
25pole + ground							
Size **16** for multipole connectors	M 25	0 with cable gland 1 with threaded collar		113 117 117	43 52 52	28 76.5 76.5	1 1 1
40pole + ground	M 32	0 with cable gland 1 with threaded collar		117 117	52 52	76.5 76.5	1 1
Size **24** for multipole connectors	M 25	0 with cable gland 1 with threaded collar		140 144 144	43 52 52	28 76.5 76.5	1 1 1
64pole + ground	M 32	0 with cable gland 1 with threaded collar		144 144	52 52	76.5 76.5	1 1

revos

Version e **Version f** **Version g** **Version h** **Version i**

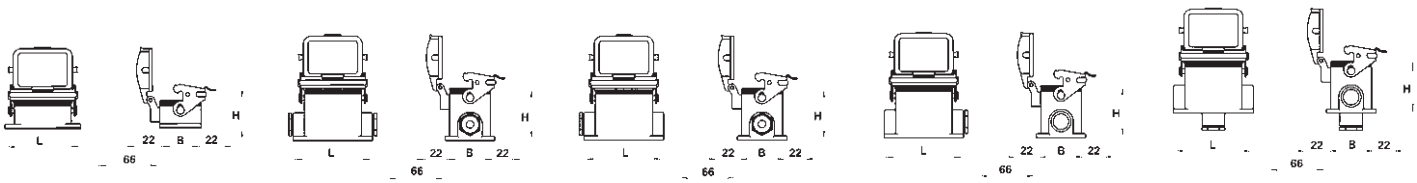

Open-bottom housing with protective cover for female and male inserts only Version e	Closed-bottom housing with two narrow-side entry cable glands and protective cover Version f	Closed bottom housing with one narrow-side entry cable gland on the left and protective cover Version g	Closed bottom housing with one narrow-side entry cable gland on the right and protective cover Version h	Closed bottom housing with one bottom entry cable gland and protective cover Version i	Open-bottom housing with protective cover and locking ridges for multipole adapters Version e
Part no.	Part no.	Part no.	Part no.	Part no.	Part no.
76.325.1528.0					
76.325.2528.0					
71.325.1628.0	76.340.4035.0 76.340.4035.1	76.341.4035.0 76.341.4035.1	76.342.4035.0 76.342.4035.1	76.343.4035.0 76.343.4035.1	76.327.4028.0
	76.344.4035.0 76.344.4035.1	76.345.4035.0 76.345.4035.1	76.346.4035.0 76.346.4035.1	76.347.4035.0 76.347.4035.1	
71.325.2428.0	76.340.6435.0 76.340.6435.1	76.341.6435.0 76.341.6435.1	76.342.6435.0 76.342.6435.1	76.343.6435.0 76.343.6435.1	76.327.6428.0
	76.344.6435.0 76.344.6435.1	76.345.6435.0 76.345.6435.1	76.346.6435.0 76.346.6435.1	76.347.6435.0 76.347.6435.1	

Industrial multipole connectors
Hoods with double locking levers,
revos HD

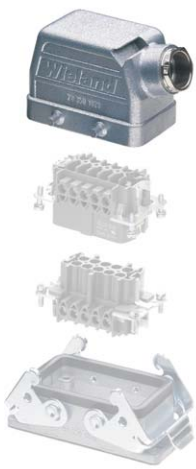

For inserts **600 V** UL/CSA

For inserts **250 V** IEC 61 984

DIN EN 175301-801
Degrees of protection: IP 55
IP 65 with the appropriate cable glands

Number of poles	Thread	Cable gland type	Dimensions in mm	L	W	H	Stand. pack
Size**16** for multipole connectors **40pole + ground**	M 25	0 with cable gland		93.5	43	76	1
		1 with thread		93.5	43	76	1
		2 with intermediate support		93.5	43	76	1
		3 with strain relief		93.5	43	76	1
	M 32	0 with cable gland		93.5	43	76	1
		1 with threaded collar		93.5	43	76	1
		2 with intermediate support		93.5	43	76	1
		3 with strain relief		93.5	43	76	1
Size **24** for multipole connectors **64pole + ground**	M 25	0 with cable gland		120	43	76	1
		1 with threaded collar		120	43	76	1
		2 with intermediate support		120	43	76	1
		3 with strain relief		120	43	76	1
	M 32	0 with cable gland		120	43	76	1
		1 with threaded collar		120	43	76	1
		2 with intermediate support		120	43	76	1
		3 with strain relief		120	43	76	1

revos

Version A

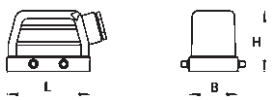

Version C

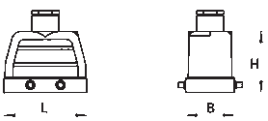

Version D

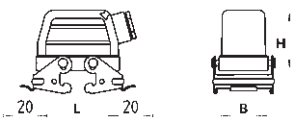

Version F

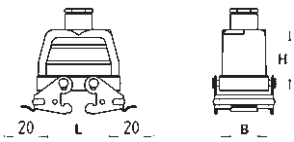

Hood with cable gland Version A 	Hood with cable gland Version C 	Hood with cable gland Version D 	Hood with cable gland Version F
Part no.	Part no.	Part no.	Part no.
73.350.4035.0 73.350.4035.1 73.350.4035.2 73.350.4035.3	73.352.4035.0 73.352.4035.1 73.352.4035.2 73.352.4035.3	73.355.4035.0 73.355.4035.1 73.355.4035.2 73.355.4035.3	73.357.4035.0 73.357.4035.1 73.357.4035.2 73.357.4035.3
73.353.4035.0 73.353.4035.1 73.353.4035.2 73.353.4035.3	73.354.4035.0 73.354.4035.1 73.354.4035.2 73.354.4035.3	73.358.4035.0 73.358.4035.1 73.358.4035.2 73.358.4035.3	73.359.4035.0 73.359.4035.1 73.359.4035.2 73.359.4035.3
73.350.6435.0 73.350.6435.1 73.350.6435.2 73.350.6435.3	73.352.6435.0 73.352.6435.1 73.352.6435.2 73.352.6435.3	73.355.6435.0 73.355.6435.1 73.355.6435.2 73.355.6435.3	73.357.6435.0 73.357.6435.1 73.357.6435.2 73.357.6435.3
73.353.6435.0 73.353.6435.1 73.353.6435.2 73.353.6435.3	73.354.6435.0 73.354.6435.1 73.354.6435.2 73.354.6435.3	73.358.6435.0 73.358.6435.1 73.358.6435.2 73.358.6435.3	73.359.6435.0 73.359.6435.1 73.359.6435.2

Industrial multipole connectors
Housings with double locking levers, without protective cover

revos HD

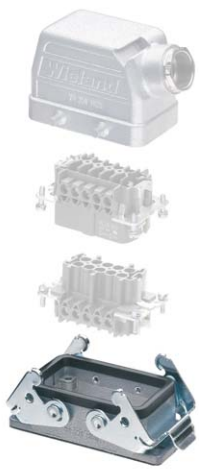

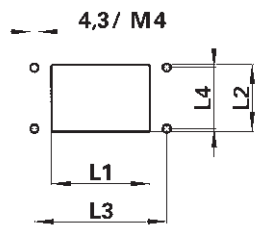

Mounting dimensions and cut-outs for open-bottom housings

Housing size	Cut-out (mm)		Mounting dimensions (mm)	
	L1	L2	L3	L4
16	83.5	103	32	35
24	112	130	32	35

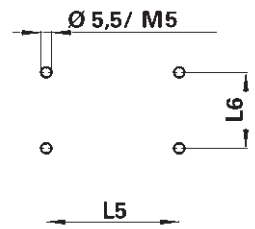

Mounting dimensions for closed-bottom housings

Housing size	L5 (mm)	L6 (mm)
16	105	45
24	132	45

For inserts **600 V** UL/CSA

For inserts **250 V** IEC 61 984

DIN EN 175301-801
Degrees of protection: IP 55
IP 65 with the appropriate cable glands

Number of poles	Thread	Cable gland type	Dimensions in mm	L	W	H	Stand. pack
Size**16** for multipole connectors	M 25	0 with cable gland		113	43	28	1
		1 with threaded collar		117	52	76.5	1
				117	52	76.5	1
40pole + ground	M 32	0 with cable gland		117	52	76.5	1
		1 with threaded collar		117	52	76.5	1
Size **24** for multipole connectors	M 25	0 with cable gland		140	43	28	1
		1 with threaded collar		144	52	76.5	1
				144	52	76.5	1
64pole + ground	M 32	0 with cable gland		144	52	76.5	1
		1 with threaded collar		144	52	76.5	1

revos

Version a

Version b

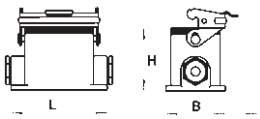

Version c

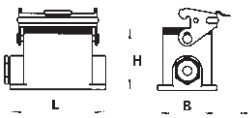

Version d

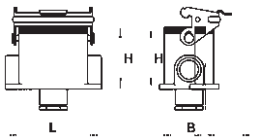

Open-bottom housing Version a	Closed-bottom housing with two narrow-side entry cable glands Version b	Closed bottom housing with one narrow-side entry cable gland on the left Version c	Closed-bottom housing with bottom entry cable gland Version d	Open-bottom housing with locking ridges for multipole adapters Version a	
Part no.	Part no.	Part no.	Part no.	Part no.	
70.320.1628.0	73.330.4035.0 73.330.4035.1	73.331.4035.0 73.331.4035.1	73.333.4035.0 73.333.4035.1	73.326.4028.0	
	73.334.4035.0 73.334.4035.1	73.335.4035.0 73.335.4035.1	73.337.4035.0 73.337.4035.1		
70.320.2428.0	73.330.6435.0 73.330.6435.1	73.331.6435.0 73.331.6435.1	73.333.6435.0 73.333.6435.1	73.326.6428.0	
	73.334.6435.0 73.334.6435.1	73.335.6435.0 73.335.6435.1	73.337.6435.0 73.337.6435.1		

Industrial multipole connectors
Hoods with double locking levers with protective cover

revos HD

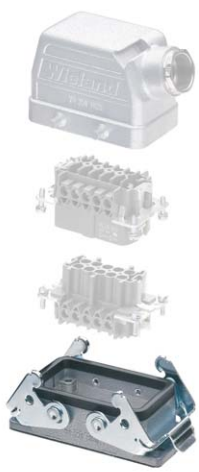

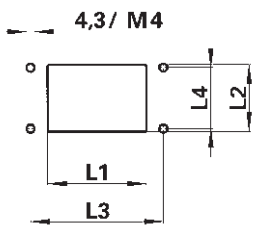

Mounting dimensions and cut-outs for open-bottom housings

Housing size	Cut-out (mm)		Mounting dimensions (mm)	
	L1	L2	L3	L4
16	83.5	103	32	35
24	112	130	32	35

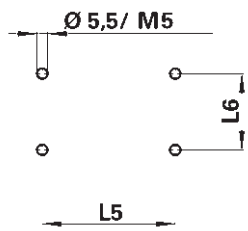

Mounting dimensions for closed-bottom housings

Housing size	L5 (mm)	L6 (mm)
16	105	45
24	132	45

For inserts **600 V** UL/CSA

For inserts **250 V** IEC 61 984

DIN EN 175301-801
Degrees of protection: IP 55
IP 65 with the appropriate cable glands

Number of poles	Thread	Cable gland type	Dimensions in mm	L	W	H	Stand. pack
Size**16** for multipole connectors	M 25	0 with cable gland		113	43	28	1
		1 with threaded collar		117	52	76.5	1
				117	52	76.5	1
40pole + ground	M 32	0 with cable gland		117	52	76.5	1
		1 with threaded collar		117	52	76.5	1
Size **24** for multipole connectors	M 25	0 with cable gland		140	43	28	1
		1 with threaded collar		144	52	76.5	1
				144	52	76.5	1
64pole + ground	M 32	0 with cable gland		144	52	76.5	1
		1 with threaded collar		144	52	76.5	1

revos

Version e	Version f	Version g	Version h	Version i
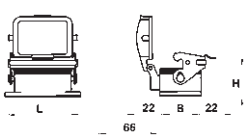	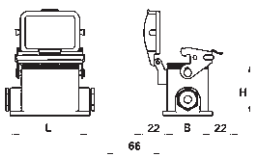	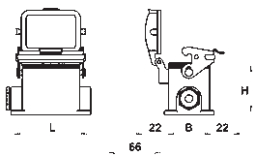	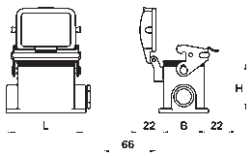	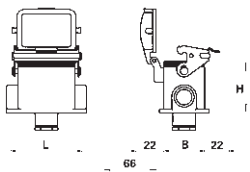
Open-bottom housing with protective cover for female and male inserts only Version e	Closed-bottom housing with two narrow-side entry cable glands and protective cover Version f	Closed bottom housing with one narrow-side entry cable gland on the left and protective cover Version g	Closed bottom housing with one narrow-side entry cable gland on the right and protective cover Version h	Closed bottom housing with one bottom entry cable gland and protective cover Version i	Open-bottom housing with protective cover and locking ridges for multipole adapters Version e
Part no.	Part no.	Part no.	Part no.	Part no.	Part no.
70.325.1628.0	73.340.4035.0 73.340.4035.1	73.341.4035.0 73.341.4035.1	73.342.4035.0 73.342.4035.1	73.343.4035.0 73.343.4035.1	73.327.4028.0
	73.344.4035.0 73.344.4035.1	73.345.4035.0 73.345.4035.1	73.346.4035.0 73.346.4035.1	73.347.4035.0 73.347.4035.1	
70.325.2428.0	73.340.6435.0 73.340.6435.1	73.341.6435.0 73.341.6435.1	73.342.6435.0 73.342.6435.1	73.343.6435.0 73.343.6435.1	73.327.6428.0
	73.344.6435.0 73.344.6435.1	73.345.6435.0 73.345.6435.1	73.346.6435.0 73.346.6435.1	73.347.6435.0 73.347.6435.1	

Industrial multipole connector
for cable to cable couplings with double locking lever

revos

All hoods and housings can be supplied with an intermediate support and without metric cable glands. For this case please change the part number by adding a 2 in the end (e.g. 72.352.1035.2). If you want to order hoods or housings with metric thread only, please indicate a 1 at the end of the part number (e.g. 72.352.1035.1).

Other than shown in the figure, the 6pole and 48pole connectors in version 70.3, and the 20, 26 and 32pole connectors in version 70.4 only have one locking lever on the broad side!

For accessories and marking material for hoods and open-bottom housings please see the section Accessories for industrial multipole connectors

Degree of protection: IP 55 accord. to DIN EN 60 529
Degree of protection: IP 65 accord. to DIN EN 60 529 with appropriate cable glands

Rated current accord. to IEC 61 984

Type	Used cont.	Switch. cont.	ground	Cable entry	U	UL/CSA	I	Cross section		Stand. pack	Female insert with screw connection Part no.	Male insert with screw connection Part no.
70.3	6	–	1	M 20	500 V	600 V	16 A	2.5 mm²	12 AWG	10	70.300.0640.0	70.310.0640.0
70.4	3	2	1	M 20	690/400 V	600 V	16 A	2.5 mm²	12 AWG	10	70.400.0340.0	70.410.0340.0
70.4	6	2	1	M 25	690/400 V	600 V	16 A	2.5 mm²	12 AWG	10	70.400.0640.0	70.410.0640.0
70.2	6	–	1	M 25	400 V	600 V	35 A	6.0 mm²	8 AWG	10	70.200.0653.0	70.210.0653.0
70.3	10	–	1	M 20	500 V	600 V	16 A	2.5 mm²	12 AWG	10	70.300.1040.0	70.310.1040.0
70.4	10	2	1	M 25	690/400 V	600 V	16 A	2.5 mm²	12 AWG	10	70.400.1040.0	70.410.1040.0
70.3	16	–	1	M 32	500 V	600 V	16 A	2.5 mm²	12 AWG	10	70.300.1640.0	70.310.1640.0
70.4	16	2	1	M 32	690/400 V	600 V	16 A	2.5 mm²	12 AWG	10	70.400.1640.0	70.410.1640.0
70.4	20	2	1	M 32	690/400 V	600 V	16 A	2.5 mm²	12 AWG	5	70.400.2040.0	70.410.2040.0
70.3	24	–	1	M 32	500 V	600 V	16 A	2.5 mm²	12 AWG	10	70.300.2440.0	70.310.2440.0
70.4	26	2	1	M 32	690/400 V	600 V	16 A	2.5 mm²	12 AWG	5	70.400.2640.0	70.410.2640.0
70.4	32	2	1	M 32	690/400 V	600 V	16 A	2.5 mm²	12 AWG	5	70.400.3240.0	70.410.3240.0
70.3	48	–	1	M 32	500 V	600 V	16 A	2.5 mm²	12 AWG	5	70.300.4840.0	70.310.4840.0

revos

	Hood with cable gland	Hood with cable gland with locking levers and gasket	Hood with strain relief	Hood with strain relief with locking levers and gasket
Std. pack	Part no.	Part no.	Part no.	Part no.
1	70.352.0635.0	70.372.0635.0	70.352.0635.3	70.372.0635.3
1	72.352.1035.0	72.372.1035.0	72.352.1035.3	72.372.1035.3
1	72.352.1635.0	72.372.1635.0	72.352.1635.3	72.372.1635.3
1	70.352.1635.0	70.372.1635.0	70.352.1635.3	70.372.1635.3
1	70.352.1035.0	70.372.1035.0	70.352.1035.3	70.372.1035.3
1	72.352.2435.0	72.372.2435.0	72.352.2435.3	72.372.2435.3
1	70.354.1635.0	70.374.1635.0	70.354.1635.3	70.374.1635.3
1	72.354.2435.0	72.374.2435.0	72.354.2435.3	72.374.2435.3
1			70.375.4835.3	70.372.4835.3
1	70.354.2435.0	70.374.2435.0	70.354.2435.3	70.374.2435.3
1			70.375.4835.3	70.372.4835.3
1			70.375.4835.3	70.372.4835.3
1			70.375.4835.3	70.372.4835.3

Examples:

10pole connection

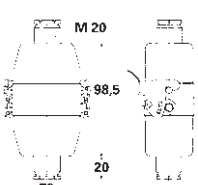

10pole connection

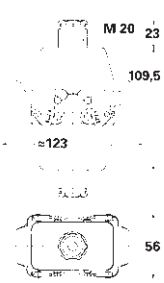

16pole connection

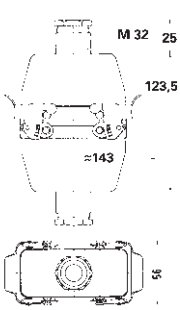

24pole connection

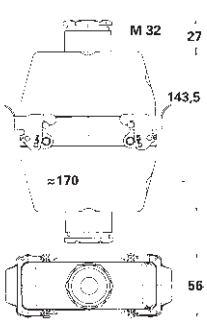

48pole connection

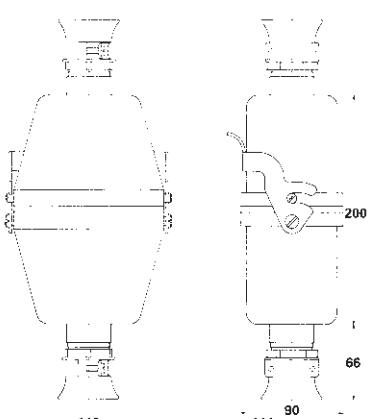

Industrial multipole connector
for cable to cable couplings with single locking lever

revos

All hoods and housings can be supplied with an intermediate support and without metric cable glands. For this case please change the part number by adding a 2 in the end (e.g. 72.352.1035.2). If you want to order hoods or housings with metric cable gland only, please indicate a 1 at the end of the part number (e.g. 72.352.1035.1).

For accessories and marking material for hoods and open-bottom housings please see the section Accessories for industrial multipole connectors

Degree of protection: IP 55 accord.to DIN EN 60 529
Degree of protection: IP 65
accord. to DIN EN 60 529 with appropriate cable glands

Rated current accord. to IEC 61 984

Type	Used cont.	Switch. cont.	Ground	Cable entry	U	UL/CSA	I	Cross section	Stand. pack	Female insert with screw connection Part no.	Male insert with screw connection Part no.
71.4	3	2	1	M 20	690/400 V	600 V	16 A	2.5 mm² 12 AWG	10	70.400.0340.0	70.410.0340.0
71.4	6	2	1	M 25	690/400 V	600 V	16 A	2.5 mm² 12 AWG	10	70.400.0640.0	70.410.0640.0
71.2	6	–	1	M 25	400 V	600 V	35 A	6.0 mm² 8 AWG	10	70.200.0653.0	70.210.0653.0
71.3	10	–	1	M 20	500 V	600 V	16 A	2.5 mm² 12 AWG	10	70.300.1040.0	70.310.1040.0
71.4	10	2	1	M 32	690/400 V	600 V	16 A	2.5 mm² 12 AWG	10	70.400.1040.0	70.410.1040.0
71.3	16	–	1	M 25	500 V	600 V	16 A	2.5 mm² 12 AWG	10	70.300.1640.0	70.310.1640.0
71.4	16	2	1	M 32	690/400 V	600 V	16 A	2.5 mm² 12 AWG	10	70.400.1640.0	70.410.1640.0
71.3	24	–	1	M 32	500 V	600 V	16 A	2.5 mm² 12 AWG	10	70.300.2440.0	70.310.2440.0
										Male insert with crimp connection	Male insert with crimp connection
73.7	15	–	1	M 20	250 V	600 V	10 A	1.5 mm² 16 AWG	10	73.700.1553.0	73.710.1553.0
73.7	15	–	1	M 25	250 V	600 V	10 A	1.5 mm² 16 AWG	10	73.700.1553.0	73.710.1553.0
73.7	25	–	1	M 20	250 V	600 V	10 A	1.5 mm² 16 AWG	10	73.700.2553.0	73.710.2553.0
73.7	25	–	1	M 25	250 V	600 V	10 A	1.5 mm² 16 AWG	10	73.700.2553.0	73.710.2553.0

revos

	Hood with cable gland	Hood with cable gland with locking levers and gasket	Hood with strain relief	Hood with strain relief with locking levers and gasket
Std. pack	Part no.	Part no.	Part no.	Part no.
1	77.352.1035.0	77.372.1035.0	77.352.1035.3	77.372.1035.3
1	77.352.1635.0	77.372.1635.0	77.352.1635.3	77.372.1635.3
1	71.352.1635.0	71.372.1635.0	71.352.1635.3	71.372.1635.3
1	71.352.1035.0	71.372.1035.0	71.352.1035.3	71.372.1035.3
1	77.354.2435.0	77.374.2435.0	77.354.2435.3	77.374.2435.3
1	71.352.1635.0	71.372.1635.0	71.352.1635.3	71.372.1635.3
1	77.354.2435.0	77.374.2435.0	77.354.2435.3	77.374.2435.3
1	71.354.2435.0	71.374.2435.0	71.354.2435.3	71.374.2435.3
1	76.352.1535.0	76.372.1535.0		
1	76.354.1535.0	upon request		
1	76.352.2535.0	76.372.2535.0		
1	76.354.2535.0	upon request		

Examples:

10pole connection

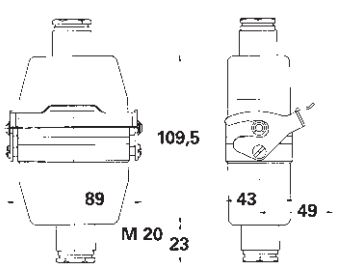

16pole connection

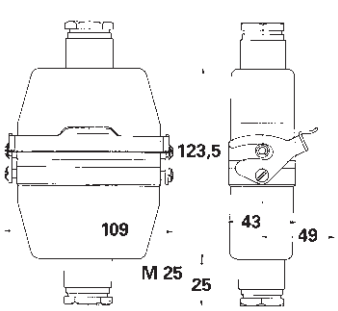

24pole connection

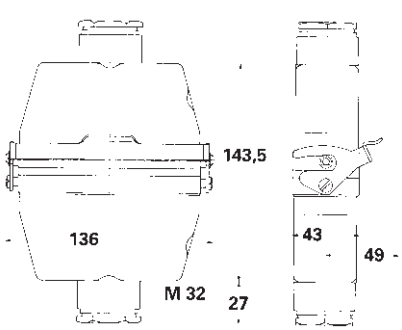

Modular industrial multipole connectors

revos FLEX

Technical Data

Approvals	UL, CSA
Applicable standards	IEC 61 984
Contact inserts	
3pole	
Rated current	max. 40 A
Rated current accord. to UL/CSA	40 A / 35 A
Rated voltage	630 V
Rated voltage accord. to UL/CSA	600 V
Mains voltage	690 V AC
Insulating material	PC, zero halogen
Color	pebble gray, RAL 7032
Flammability class	UL 94 V-0
Crimp connection	Ø 3.6 mm^2, turned contact
4pole + ground	
Rated current	max. 16 A
Rated voltage	1000 V
Insulating material	PA GF, zero halogen
Color	black
Flammability class	UL 94 V-0
Crimp connection	Ø 2.5 mm^2, stamped contact
5pole	
Rated current	max. 20 A
Rated current accord. to UL/CSA	20 A / 16 A
Rated voltage	250 V
Rated voltage accord. to UL/CSA	600 V
Insulating material	PC, zero halogen
Color	pebble gray, RAL 7032
Flammability class	UL 94 V-0
Crimp connection	Ø 2.5 mm^2, turned contact
10pole	
Rated current	max. 10 A
Rated current accord. to UL/CSA	10 A
Rated voltage	250 V
Rated voltage accord. to UL/CSA	600 V
Insulating material	PC, zero halogen
Color	pebble gray, RAL 7032
Flammability class	UL 94 V-0
Crimp connection	Ø 1.6 mm^2, turned contact
20pole	
Rated current	max. 4 A
Rated current accord. to UL/CSA	5 A
Rated voltage	630 V
Rated voltage accord. to UL/CSA	63 V/ 60 V
Insulating material	PC, zero halogen
Color	pebble gray, RAL 7032
Flammability class	UL 94 V-0
Crimp connection	Ø 1.0 mm^2, stamped contact
Contacts	
Material	copper alloy
Surface	silver-plated (3, 4, 5 and 10pole) gold-plated (20pole)

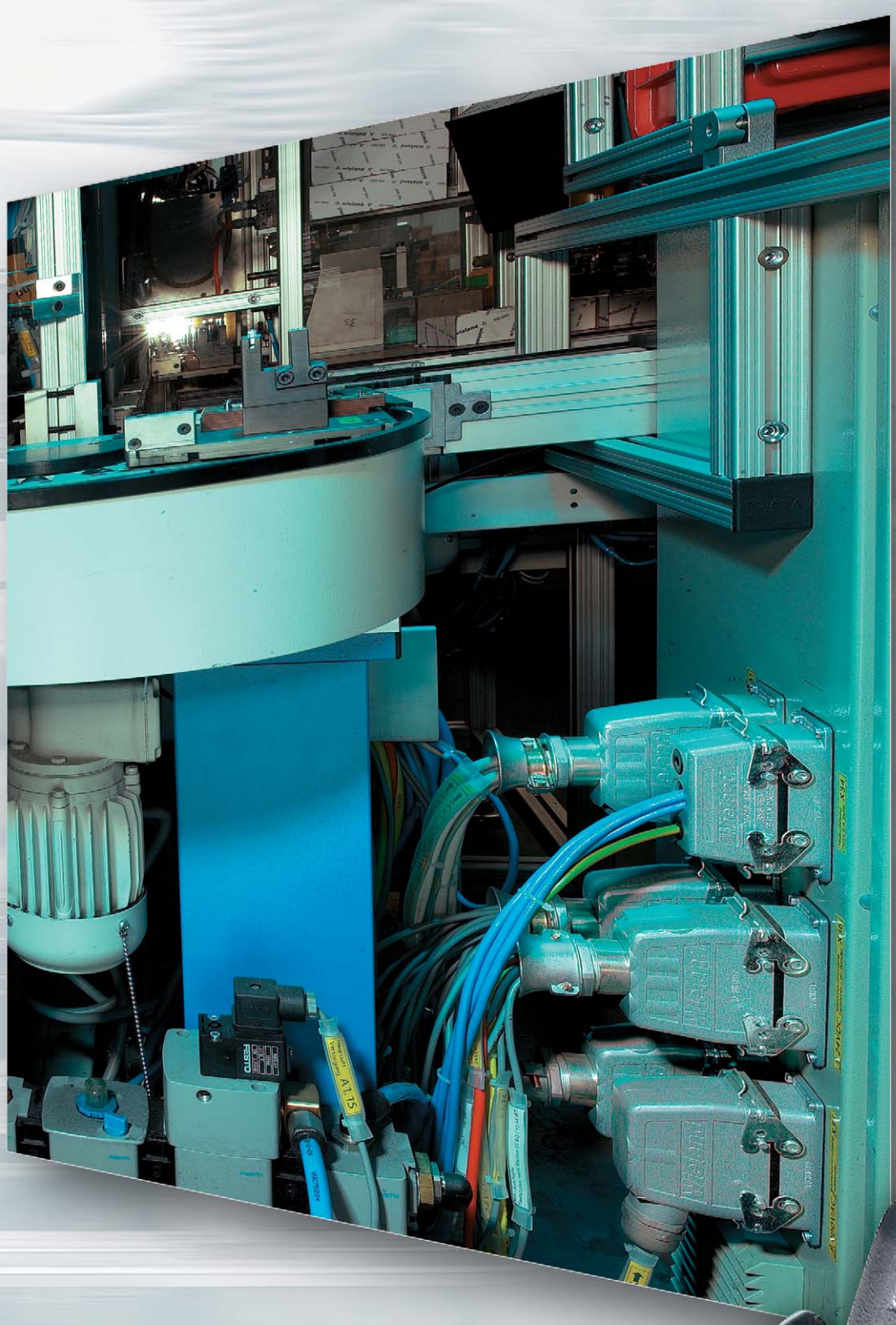

revos

Industrial Multipole Connectors

Modular industrial multipole connectors

revos FLEX

Manager in terms of performance and flexibility

Industrial multipole connectors function as electro-mechanical interfaces and enable an efficient connection between the power supply and control lines of industrial systems and devices. Their complexity, however, becomes more and more demanding and sets limits to standard connector systems.

Wieland Electric GmbH developed the modular multipole connector system ***revos*** FLEX to meet the requirements of highly complex applications.

The high flexibility of the connector system is characterized by its individual design options which can be adapted to the various applications. The module frames can be fitted with modular inserts of 3 to 20 poles in a voltage range between 100V and 1000V, and for electrical power between 4A and 40A. Flexibility also shows in the fact that the module frames can be fitted inverted, meaning female and male contacts on the same side.

The contacts for the 3, 5 and 10pole modular inserts are turned and silver-plated and can be used for the crimp connection technique. For high-voltage applications, the modular inserts are designed with 4 poles + ground with punched and silver-plated contacts. The contacts of the 20pole modular inserts are also punched, but gold-plated.

You can choose among four sizes of module frames which provide a ground connection at the front.
Die cast aluminum housings are available for 6, 10, 16 and 24pole standard inserts and provide sufficient protection against tough environmental conditions.

System design

❒ 4 frame sizes
❒ 5 different modules
❒ 17 contact variations
❒ 306 hood and housing options

System advantages

❒ Flexible usage
  – The modules can be used independently of the signal flow
  – Signal, control and power modules can be combined in one connector
  – Already existing modules can be combined with new modules
  – Future module designs can be used due to the system's modularity
❒ Safe handling
  – The modules are coded and can therefore not be mismated in the frame
  – The connectors can be coded as per the module assignment
  – Easy contact recognition because of the markings
  – Gas-tight crimping
❒ Cost reduction
  – Small quantities of connectors can be implemented cost effectively
  – Reduced number of connectors
  – Low stock due to reduced product variety
  – Higher availability due to reduced product variety
❒ in quantities of 100 pieces or more, the frames can be fitted with empty modules according to your drawings.

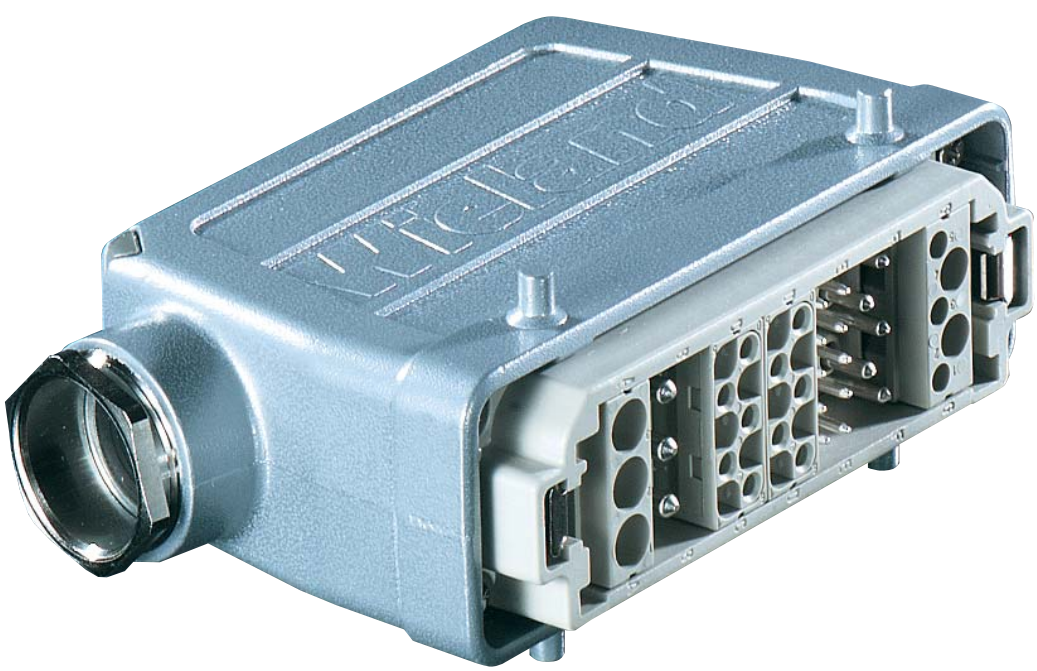

revos

See the following sequence list to design your own connector:

1	**Determine the frame** such as:	
	Male contact frame, size 10, for 3 modules	78.010.1053.0
	Female contact frame, size 10, for 3 modules	78.000.1053.0
2	**Determine the housing** such as:	
	Hood	70.350.1035.0
	Housings	70.320.1028.0
3	**Select the modules** such as:	
	Modular insert, 3pole, male	78.014.0353.0
	Modular insert, 3pole, female	78.004.0353.0
4	**Select the contacts** such as:	
	Male contacts for 4 mm^2	05.544.3129.8
	Female contacts for 4 mm^2	02.125.3129.8
5	**Select the crimping tools** such as:	
	Crimping tool	95.101.0800.0
	Crimping die "D"	05.502.2300.0
	Contact positioner "1"	05.502.3100.0

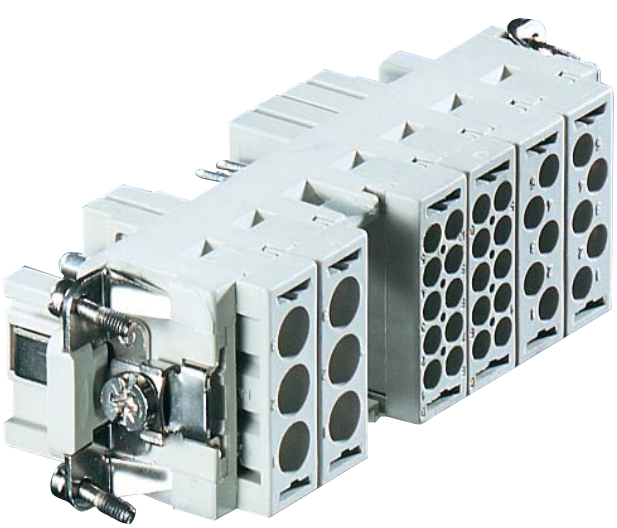

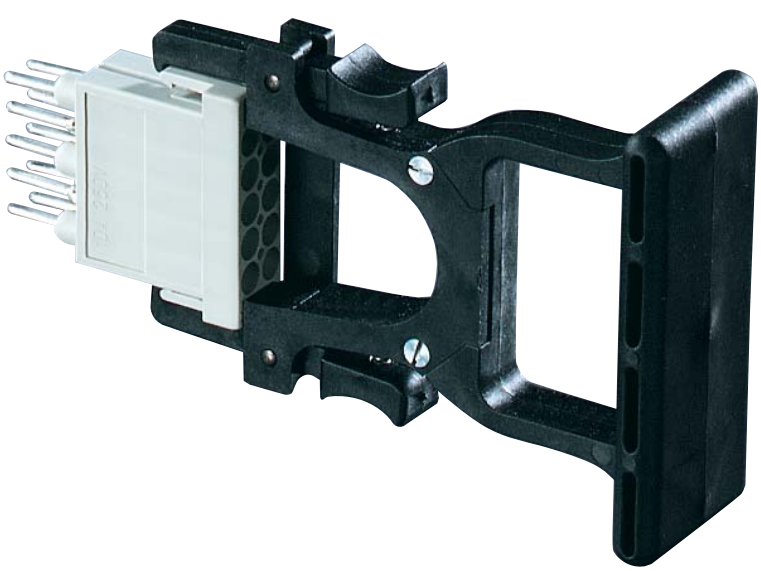

Modular industrial multipole connectors
Technical information

revos FLEX

Modular inserts

Crimp contacts

Number of poles of the modular inserts			Part no.	Stand. pack	Approval/		mm²	AWG	Part no.	Stand. pack
3pole						**Contact Ø 3.6 mm**				
turned contact Ø	3.6 mm					Male	4.0	12	05.544.3129.8	100
Connection range	see crimp contact Rated					contact	6.0	10	05.544.3229.8	100
current / UL/CSA	max. 40 A / 35 A						10.0	8	05.544.3329.8	100
Rated voltage	630 V/8 kV/3					Female	4.0	12	02.125.3129.8	100
Mains voltage / UL/CSA	690 V AC / 600 V					contact	6.0	10	02.125.3229.8	100
Insulating material	PC, halogen-free						10.0	8	02.125.3329.8	100
Color	pepple gray, RAL 7032	Modular male insert	78.014.0353.0	10		Contact material			copper alloy	
Flammability class	UL 94 V-0	Modular fem. insert	78.004.0353.0	10		Contact surface			Ag	
4pole + ground						**Contact Ø 2.5 mm**				
punched ontact Ø	2.5 mm					Male	0.5 – 1.5	20 – 16	05.544.3429.8	100
Connection range	see crimp contact Rated					contact	1.5 – 2.5	16 – 14	05.544.3529.8	100
current	max. 16 A					Female	0.5 – 1.5	20 – 16	02.125.3429.8	100
Rated voltage	1000 V/8 kV/3					contact	1.5 – 2.5	16 – 14	02.125.3529.8	100
Insulating material	PA 6.6 GF, halogen-free									
Color	black	Mod. male insert	78.013.0453.0	10		Contact material			copper alloy	
Flammability class	UL 94 V-0	Mod. fem. insert	78.003.0453.0	10		Contact surface			Ag	
5pole						**Contact Ø 2.5 mm**				
turned contact Ø	2.5 mm					Male	0.5	20	05.544.3629.8	100
Connection range	see crimp contact Rated					contact	0.75 – 1.0	18	05.544.3729.8	100
current	max. 20 A						1.5	16	05.544.3829.8	100
Rated voltage	250 V/6 kV/3						2.5	14	05.544.3929.8	100
Insulating material	PC, halogen-free						4.0	12	05.544.4029.8	100
Color	pepple gray, RAL 7032					Female	0.5	20	02.125.3629.8	100
Flammability class	UL 94 V-0					contact	0.75 – 1.0	18	02.125.3729.8	100
							1.5	16	02.125.3829.8	100
							2.5	14	02.125.3929.8	100
							4.0	12	02.125.4029.8	100
		Mod. male insert	78.013.0553.0	10		Contact material			copper alloy	
		Mod. fem. insert	78.003.0553.0	10		Contact surface			Ag	
10pole						**Contact Ø 1.6 mm**				
turned contact Ø	1.6 mm					Male	0.14 – 0.37	26 – 22	05.544.4129.8	100
Connection range	see crimp contact Rated					contact	0.5	20	05.544.4229.8	100
current	max. 10 A						0.75 – 1.0	18	05.544.4329.8	100
Rated voltage / UL/CSA	250 V/4 kV/3/ 240 V						1.5	16	05.544.4429.8	100
Insulating material	PC, halogen-free						2.5	14	05.544.4529.8	100
Color	pepple gray, RAL 7032					Female	0.14 – 0.37	26 – 22	02.125.4129.8	100
Flammability class	UL 94 V-0					contact	0.5	20	02.125.4229.8	100
							0.75 – 1.0	18	02.125.4329.8	100
							1.5	16	02.125.4429.8	100
							2.5	14	02.125.4529.8	100
		Mod. male insert	78.012.1053.0	10		Contact material			copper alloy	
		Mod. fem. insert	78.002.1053.0	10		Contact surface			Ag	
20pole						**Contact Ø 1.0 mm**				
punched ontact Ø	1.0 mm					Male	0.09 – 0.25	28 – 24	05.544.4629.7	100
Connection range	see crimp contact Rated					contact	0.25 – 0.5	24 – 20	05.544.4729.7	100
current / UL/CSA	max. 4 A / 5 A					Female	0.09 – 0.25	28 – 24	02.125.4629.7	100
Rated voltage / UL/CSA	100 V/1.5 kV/3 / 60 V					contact	0.25 – 0.5	24 – 20	02.125.4729.7	100
Insulating material	PC, halogen-free									
Color	pepple gray, RAL 7032	Male module Female	78.011.2053.0	10		Contact material			copper alloy	
Flammability class	UL 94 V-0	module	78.001.2053.0	10		Contact surface			Au	

revos

Crimping tools	Part no.	Stand. pack	Extraction tool for contacts	Part no.	Stand. pack	Extraction tool for modular inserts	Part no.	Stand. pack
Crimping tool in system kit	95.101.0800.0	1		05.502.0910.0	1		05.502.1010.0	1
Crimping die "D"	05.502.2300.0	1						
Contact positioner "1"	05.502.3100.0	1						
Crimping tool in system kit	95.101.0800.0	1		05.502.0610.0	1			
Crimping die "C"	05.502.2200.0	1						
Contact positioner "2"	05.502.3200.0	1						
Crimping tool in system kit	95.101.0800.0	1		05.502.0810.0	1			
Crimping die "B"	05.502.2100.0	1						
Contact positioner "1"	05.502.3100.0	1						
Crimping tool in system kit	95.101.0800.0	1		05.502.0710.0	1			
Crimping die "B"	05.502.2100.0	1						
Contact positioner "1"	05.502.3100.0	1						
Crimping tool in system kit	95.101.0800.0	1		05.502.0410.0	1			
Crimping die "A"	05.502.2000.0	1						
no contact positioner required								

Crimping tools for the modular connectors

For contact crimping we provide crimping tools in a modular system: This crimping tool system consists of a crimping tool for which you can select the crimping dies and contact positioners for your required contact type.
The crimping dies and the contact positioner are easily inserted in the tool and exchanged. You will require only one crimping tool for several contact types as you can use it with the corresponding crimping dies and contact positioners.

Modular industrial multipole connectors

revos FLEX

Male Female

Module frame

Insulating material	PC, halogen-free
Color	pepple gray, RAL 7032
Flammability class	UL 94 V-0

	Dimensions in mm	Part no.	Approvals	Stand. pack
Module frame size 6 **for 2 modules** 	**Male module frame** **Female module frame** 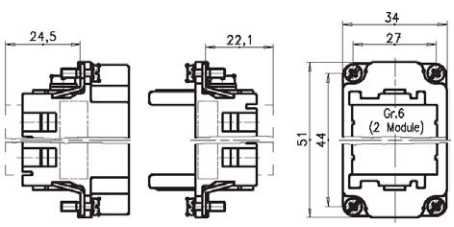	Male module 78.010.0653.0 Female module frame 78.000.0653.0	UL CSA UL CSA	10 10
Module frame size 10 **for 3 modules** 	**Male module frame** **Female module frame** 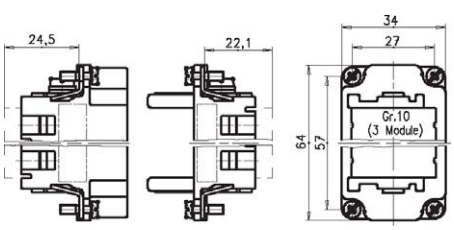	Male module frame 78.010.1053.0 Female module frame 78.000.1053.0	UL CSA UL CSA	10 10
Module frame size 16 **for 5 modules** 	**Male module frame** **Female module frame** 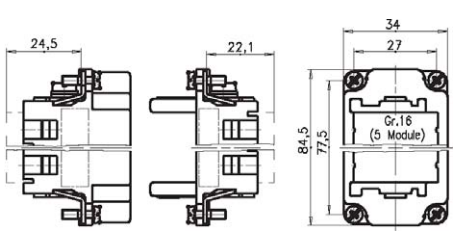	Male module frame 78.010.1653.0 Female module frame 78.000.1653.0	UL CSA UL CSA	10 10
Module frame size 24 **for 7 modules** 	**Male module frame** **Female module frame** 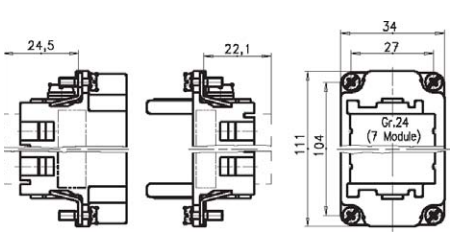	Male module frame 78.010.2453.0 Female module frame 78.000.2453.0	UL CSA UL CSA	10 10

revos

Size 6
fitted with 2 modules each

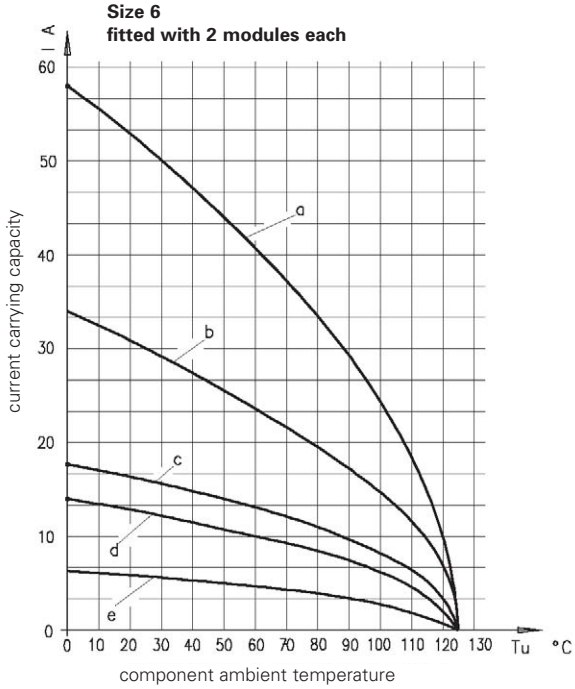

Curve	Num. of poles	Contact diameter	Connector cross section
a	6 (2x3)	3.6 mm, turned	6.0 mm² / 10 AWG
b	10 (2x5)	2.5 mm, turned	2.5 mm² / 14 AWG
c	20 (2x10)	1.6 mm, turned	1.5 mm² / 16 AWG
e	40 (2x20)	1.0 mm, punched	0.5 mm² / 20 AWG

Size 10
fitted with 3 modules each

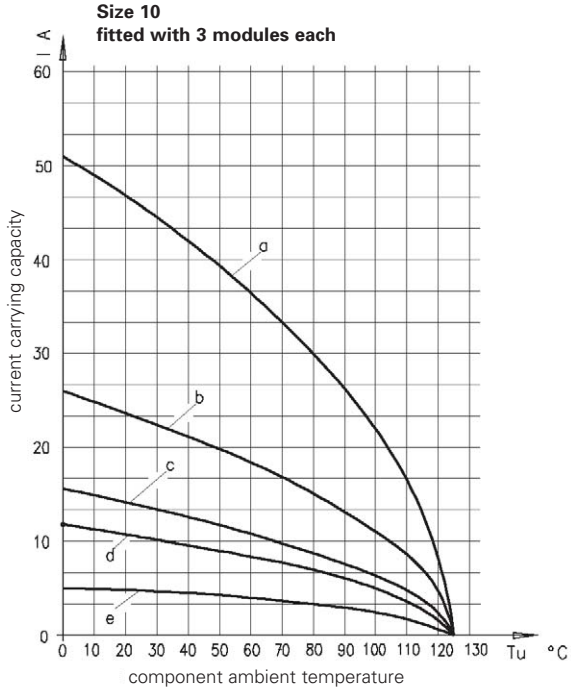

Curve	Num. of poles	Contact diameter	Connector cross section
a	9 (3x3)	3.6 mm, turned	6.0 mm² / 10 AWG
b	15 (3x5)	2.5 mm, turned	2.5 mm² / 14 AWG
c	30 (3x10)	1.6 mm, turned	1.5 mm² / 16 AWG
e	60 (3x20)	1.0 mm, punched	0.5 mm² / 20 AWG

Size 16
fitted with 5 modules each

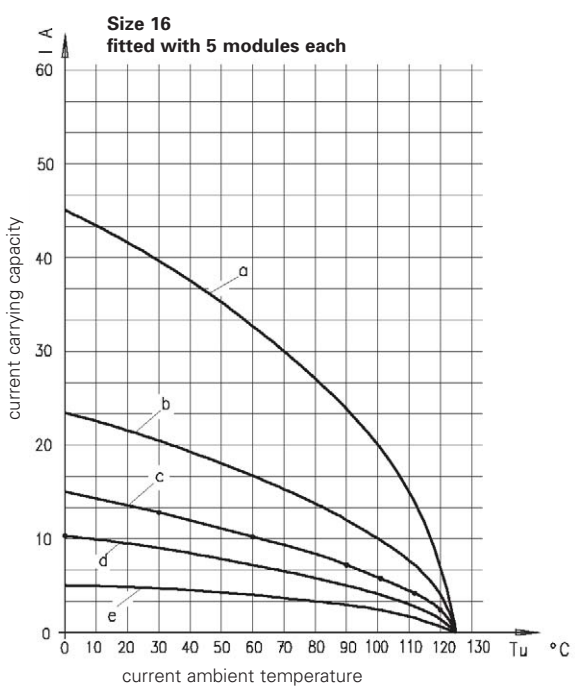

Curve	Num. of poles	Contact diameter	Connector cross section
a	15 (5x3)	3.6 mm, turned	6.0 mm² / 10 AWG
b	25 (5x5)	2.5 mm, turned	2.5 mm² / 14 AWG
c	50 (5x10)	1.6 mm, turned	1.5 mm² / 16 AWG
e	100 (5x20)	1.0 mm, punched	0.5 mm² / 20 AWG

Size 24
fitted with 7 modules each

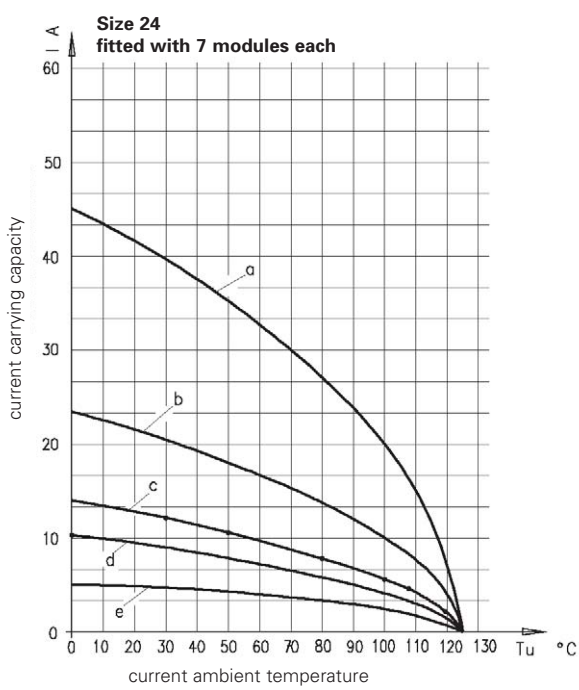

Curve	Num. of poles	Contact diameter	Connector cross section
a	21 (7x3)	3.6 mm, turned	6.0 mm² / 10 AWG
b	35 (7x5)	2.5 mm, turned	2.5 mm² / 14 AWG
c	70 (7x10)	1.6 mm, turned	1.5 mm² / 16 AWG
e	140 (7x20)	1.0 mm, punched	0.5 mm² / 20 AWG

Modular industrial multipole connector
Hoods with single locking levers

revos FLEX

Version A

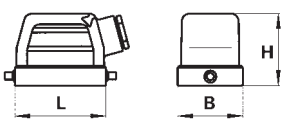

Version C

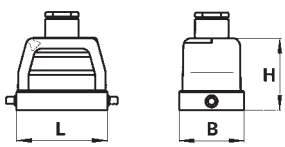

Degrees of protection: IP 55;
IP 65 with the appropriate cable glands (see the accessories)

Number of poles	Thread	Cable gland type	Dimensions in mm	L	W	H	Stand. pack
Size **6** for 2 modular inserts **6pole + ground**	M 20	0 with cable gland 1 with threaded collar 2 with intermediate support 3 with strain relief		60	43	47.5	1
	M 25	0 with cable gland 1 with threaded collar 2 with intermediate support 3 with strain relief		60	43	47.5	1
Size **10** for 3 modular inserts **10pole + ground**	M 20	0 with cable gland 1 with threaded collar 2 with intermediate support 3 with strain relief		73	43	53	1
	M 25	0 with cable gland 1 with threaded collar 2 with intermediate support 3 with strain relief		73	43	53	1
Size **16** for 5 modular inserts **16pole + ground**	M 25	0 with cable gland 1 with threaded collar 2 with intermediate support 3 with strain relief		93.5	43	76	1
	M 32	0 with cable gland 1 with threaded collar 2 with intermediate support 3 with strain relief		93.5	43	76	1
Size **24** for 7 modular inserts **24pole + ground**	M 25	0 with cable gland 1 with threaded collar 2 with intermediate support 3 with strain relief		120	43	76	1
	M 32	0 with cable gland 1 with threaded collar 2 with intermediate support 3 with strain relief		120	43	76	1

revos

Hood Version A 	Hood Version C
Part no.	Part no.
70.350.0635.0 70.350.0635.1 70.350.0635.2 70.350.0635.3	70.352.0635.0 70.352.0635.1 70.352.0635.2 70.352.0635.3
70.353.0635.0 70.353.0635.1 70.353.0635.2 70.353.0635.3	70.354.0635.0 70.354.0635.1 70.354.0635.2 70.354.0635.3
71.350.1035.0 71.350.1035.1 71.350.1035.2 71.350.1035.3	71.352.1035.0 71.352.1035.1 71.352.1035.2 71.352.1035.3
71.353.1035.0 71.353.1035.1 71.353.1035.2 71.353.1035.3	71.354.1035.0 71.354.1035.1 71.354.1035.2 71.354.1035.3
76.350.4035.0 76.350.4035.1 76.350.4035.2 76.350.4035.3	76.352.4035.0 76.352.4035.1 76.352.4035.2 76.352.4035.3
76.353.4035.0 76.353.4035.1 76.353.4035.2 76.353.4035.3	76.354.4035.0 76.354.4035.1 76.354.4035.2 76.354.4035.3
76.350.6435.0 76.350.6435.1 76.350.6435.2 76.350.6435.3	76.352.6435.0 76.352.6435.1 76.352.6435.2 76.352.6435.3
76.353.6435.0 76.353.6435.1 76.353.6435.2 76.353.6435.3	76.354.6435.0 76.354.6435.1 76.354.6435.2 76.354.6435.3

Modular industrial multipole connectors
Housings with single locking levers

revos FLEX

Version a

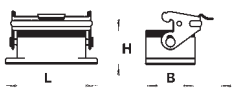

Version b

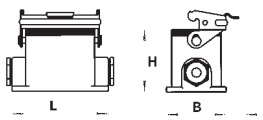

Version c

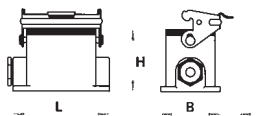

Version d

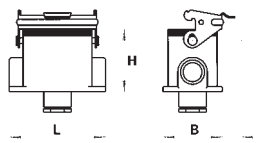

Version i

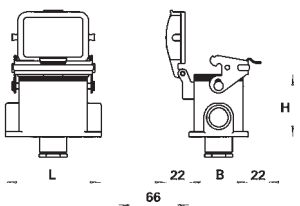

	Open-bottom housing	Closed-bottom housing with two narrow-side entry cable glands	Closed bottom housing with one narrow-side entry cable gland on the left
	Version a	Version b	Version c

Degrees of protection: IP 55; IP 65
with the appropriate cable glands (see the accessories)

Number of poles	Thread	Cable gland type	L	W	H	Std. pack	Part no.	Part no.	Part no.
Size **6**			80	43	28	1	70.320.0628.0		
for 2 modular inserts	M 20	0 with cable gland	84	52	54.5	1		70.330.0635.0	70.331.0635.0
		1 with threaded collar	84	52	54.5	1		70.330.0635.1	70.331.0635.1
Size **10**			93	43	28	1	71.320.1028.0		
for 3 modular inserts	M 20	0 with cable gland	94	52	54.5	1		71.330.1035.0	71.331.1035.0
		1 with threaded collar	94	52	54.5	1		71.330.1035.1	71.331.1035.1
Size **16**			113	43	28	1	71.320.1628.0		
high design	M 25	0 with cable gland	117	52	76.5	1		76.330.4035.0	76.331.4035.0
for 5 modular inserts		1 with threaded collar	117	52	76.5	1		76.330.4035.1	76.331.4035.1
	M 32	0 with cable gland	117	52	76.5	1		76.334.4035.0	76.335.4035.0
		1 with threaded collar	117	52	76.5	1		76.334.4035.1	76.335.4035.1
Size **24**			140	43	28	1	71.320.2428.0		
high design	M 25	0 with cable gland	144	52	76.5	1		76.330.6435.0	76.331.6435.0
for 7 modular inserts		1 with threaded collar	144	52	76.5	1		76.330.6435.1	76.331.6435.1
	M 32	0 with cable gland	144	52	76.5	1		76.334.6435.0	76.335.6435.0
		1 with threaded collar	144	52	76.5	1		76.334.6435.1	76.335.6435.1

Ø 4.3/M 4

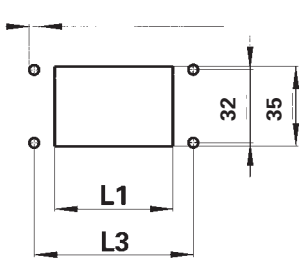

Mounting dimensions and cut-outs for open-bottom housings

Housing size	(mm) L1	(mm) L3
6	52	70
10	65	83
16	85.5	103
24	112	130

revos

Version e

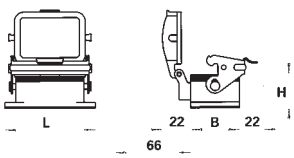

Version f

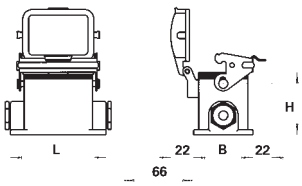

Version g

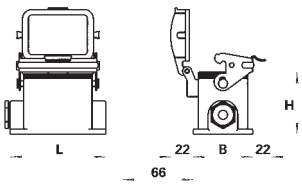

Version h

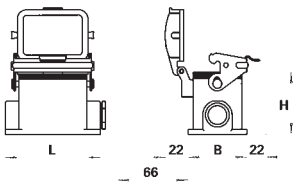

Closed-bottom housing with bottom entry cable gland Version d	Open-bottom housing with protective cover Version e	Closed-bottom housing with two narrow-side entry cable glands and protective cover Version f	Closed bottom housing with one narrow-side entry cable gland on the left and protective cover Version g	Closed bottom housing with one narrow-side entry cable gland on the right and protective cover Version h	Closed bottom housing with bottom entry cable gland and protective cover Version i
Part no.	Part no.	Part no.	Part no.	Part no.	Part no.
70.333.0635.0 70.333.0635.1	70.325.0628.0	70.340.0635.0 70.340.0635.1	70.341.0635.0 70.341.0635.1	70.342.0635.0 70.342.0635.1	70.343.0635.0 70.343.0635.1
71.333.1035.0 71.333.1035.1	71.325.1028.0	71.340.1035.0 71.340.1035.1	71.341.1035.0 71.341.1035.1	71.342.1035.0 71.342.1035.1	71.343.1035.0 71.343.1035.1
76.333.4035.0 76.333.4035.1	71.325.1628.0	76.340.4035.0 76.340.4035.1	76.341.4035.0 76.341.4035.1	76.342.4035.0 76.342.4035.1	76.343.4035.0 76.343.4035.1
76.337.4035.0 76.337.4035.1		76.344.4035.0 76.344.4035.1	76.345.4035.0 76.345.4035.1	76.346.4035.0 76.346.4035.1	76.347.4035.0 76.347.4035.1
76.333.6435.0 76.333.6435.1	71.325.2428.0	76.340.6435.0 76.340.6435.1	76.341.6435.0 76.341.6435.1	76.342.6435.0 76.342.6435.1	76.343.6435.0 76.343.6435.1
76.337.6435.0 76.337.6435.1		76.344.6435.0 76.344.6435.1	76.345.6435.0 76.345.6435.1	76.346.6435.0 76.346.6435.1	76.343.6435.0 76.343.6435.1

Housing size	L5 (mm)	L6 (mm)
6	70	40
10	82	40
16	105	45
24	132	45

Mounting dimensions for closed-bottom housings

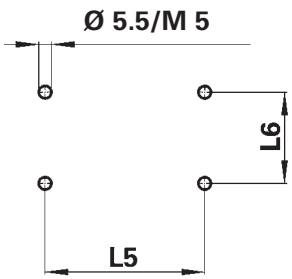

Modular industrial multipole connectors
Hoods with double locking levers

revos FLEX

Version A

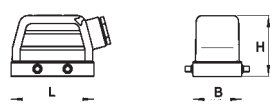

Version C

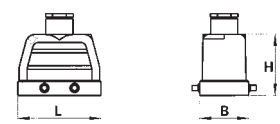

Degrees of protection: IP 55; IP 65
with the appropriate cable glands (see the accessories)

Number of poles	Thread	Cable gland type	Dimensions in mm	L	W	H	Stand. pack
Size**10** for 3 modular inserts	M 20	0 with cable gland 1 with threaded collar 2 with intermediate support 3 with strain relief		73	43	53	1
	M 32	0 with cable gland 1 with threaded collar 2 with intermediate support 3 with strain relief		73	43	76	1
Size **16** for 5 modular inserts	M 25	0 with cable gland 1 with threaded collar 2 with intermediate support 3 with strain relief		93.5	43	76	1
	M 32	0 with cable gland 1 with threaded collar 2 with intermediate support 3 with strain relief		93.5	43	76	1
Size **24** for 7 modular inserts	M 25	0 with cable gland 1 with threaded collar 2 with intermediate support 3 with strain relief		120	43	76	1
	M 32	0 with cable gland 1 with threaded collar 2 with intermediate support 3 with strain relief		120	43	76	1

revos

Version D

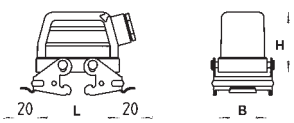

Version F

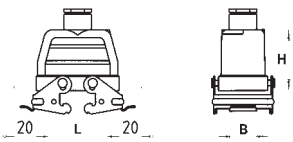

Hood Version A	Hood Version C	Hood with locking levers Version D	Hood with locking levers Version F	
Part no.	Part no.	Part no.	Part no.	
70.350.1035.0 70.350.1035.1 70.350.1035.2 70.350.1035.3	70.352.1035.0 70.352.1035.1 70.352.1035.2 70.352.1035.3	70.355.1035.0 70.355.1035.1 70.355.1035.2 70.355.1035.3	70.357.1035.0 70.357.1035.1 70.357.1035.2 70.357.1035.3	
73.353.1035.0 73.353.1035.1 73.353.1035.2 73.353.1035.3	73.354.1035.0 73.354.1035.1 73.354.1035.2 73.354.1035.3			
73.350.4035.0 73.350.4035.1 73.350.4035.2 73.350.4035.3	73.352.4035.0 73.352.4035.1 73.352.4035.2 73.352.4035.3	73.355.4035.0 73.355.4035.1 73.355.4035.2 73.355.4035.3	73.357.4035.0 73.357.4035.1 73.357.4035.2 73.357.4035.3	
73.353.4035.0 73.353.4035.1 73.353.4035.2 73.353.4035.3	73.354.4035.0 73.354.4035.1 73.354.4035.2 73.354.4035.3	73.358.4035.0 73.358.4035.1 73.358.4035.2 73.358.4035.3	73.359.4035.0 73.359.4035.1 73.359.4035.2 73.359.4035.3	
73.350.6435.0 73.350.6435.1 73.350.6435.2 73.350.6435.3	73.352.6435.0 73.352.6435.1 73.352.6435.2 73.352.6435.3	73.355.6435.0 73.355.6435.1 73.355.6435.2 73.355.6435.3	73.357.6435.0 73.357.6435.1 73.357.6435.2 73.357.6435.3	
73.353.6435.0 73.353.6435.1 73.353.6435.2 73.353.6435.3	73.354.6435.0 73.354.6435.1 73.354.6435.2 73.354.6435.3	73.358.6435.0 73.358.6435.1 73.358.6435.2 73.358.6435.3	73.359.6435.0 73.359.6435.1 73.359.6435.2 73.359.6435.3	

Modular industrial multipole connectors
Housings with double locking levers

revos FLEX

Version a

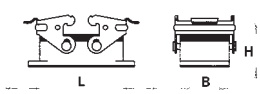

Version b

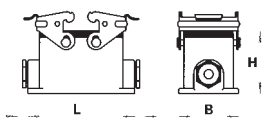

Version c

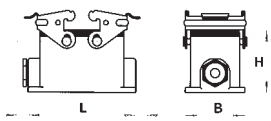

Version d

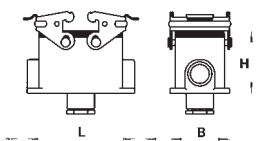

Version i

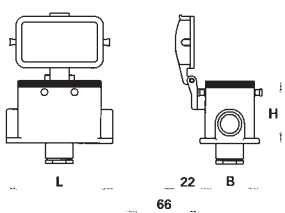

Degrees of protection:
IP 55
IP 65 with the appropriate cable glands (see the access.)

	Open-bottom housing	Closed-bottom housing with two narrow-side entry cable glands	Closed bottom housing with one narrow-side entry cable gland on the left
	Version a	Version b	Version c

Number of poles	Thread	Cable gland type	L	W	H	Stand. pack	Part no.	Part no.	Part no.
Size**10**			93	43	28	1	70.320.1028.0		
for 3 modular inserts	M 20	0 with cable gland	94	52	54.5	1		70.330.1035.0	70.331.1035.0
		1 with threaded collar	94	52	54.5	1		70.330.1035.1	70.331.1035.1
Size **16**			113	43	28	1	70.320.1628.0		
high design	M 25	0 with cable gland	117	52	76.5	1		73.330.4035.0	73.331.4035.0
for 5 modular inserts		1 with threaded collar	117	52	76.5	1		73.330.4035.1	73.331.4035.1
Size **16**		0 with cable gland							
high design	M 32	1 with threaded collar	117	52	76.5	1		73.334.4035.0	73.335.6435.0
for 5 modular inserts			117	52	76.5	1		73.334.4035.1	73.335.6435.1
Size **24**		0 with cable gland	140	43	28	1	70.320.2428.0		
high design	M 25	1 with threaded collar	144	52	76.5	1		73.330.6435.0	73.331.4035.0
for 7 modular inserts			144	52	76.5	1		73.330.6435.1	73.331.4035.1
Size **24**		0 with cable gland	140	43	28	1			
high design	M 32	1 with threaded collar	144	52	76.5	1		73.334.6435.0	73.335.6435.0
for 7 modular inserts			144	52	76.5	1		73.334.6435.1	73.335.6435.1

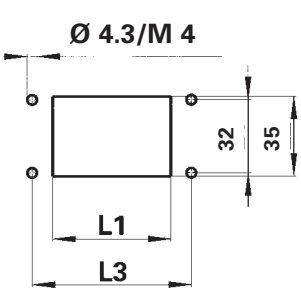

Mounting dimensions and cut-outs for open-bottom housings

Housing size	(mm) L1	(mm) L3
10	65	83
16	85.5	103
24	112	130

revos

Version e

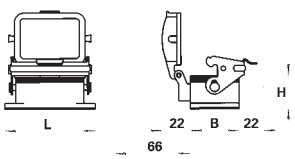

Version f

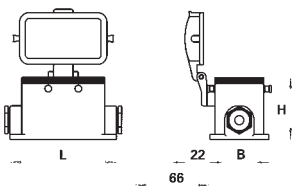

Version g

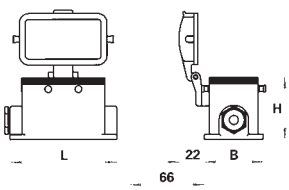

Version h

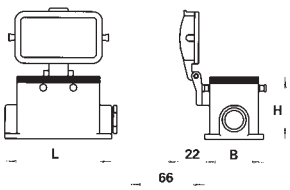

Closed-bottom housing with bottom entry cable gland Version d	Open-bottom housing with protective cover Version e	Closed-bottom housing with two narrow-side entry cable glands and protective cover Version f	Closed bottom housing with one narrow-side entry cable gland on the left and protective cover Version g	Closed bottom housing with one narrow-side entry cable gland on the right and protective cover Version h	Closed bottom housing with bottom entry cable gland and protective cover Version i
Part no.	Part no.	Part no.	Part no.	Part no.	Part no.
70.333.1035.0 70.333.1035.1	70.325.1028.0	70.340.1035.0 70.340.1035.1	70.341.1035.0 70.341.1035.1	70.342.1035.0 70.342.1035.1	70.343.1035.0 70.343.1035.1
73.333.4035.0 73.333.4035.1	70.325.1628.0	73.340.4035.0 73.340.4035.1	73.341.4035.0 73.341.4035.1	73.342.4035.0 73.342.4035.1	73.343.4035.0 73.343.4035.1
73.337.4035.0 73.337.4035.1		73.344.4035.0 73.344.4035.1	73.345.4035.0 73.345.4035.1	73.346.4035.0 73.346.4035.1	73.347.4035.0 73.347.4035.1
73.333.6435.0 73.333.6435.1	70.325.2428.0	73.340.6435.0 73.340.6435.1	73.341.6435.0 73.341.6435.1	73.342.6435.0 73.342.6435.1	73.343.6435.0 73.343.6435.1
73.337.6435.0 73.337.6435.1		73.344.6435.0 73.344.6435.1	73.345.6435.0 73.345.6435.1	73.346.6435.0 73.346.6435.1	73.347.6435.0 73.347.6435.1

Mounting dimensions for closed-bottom housings

Housing size	L5 (mm)	L6 (mm)
10	82	40
16	105	45
24	132	45

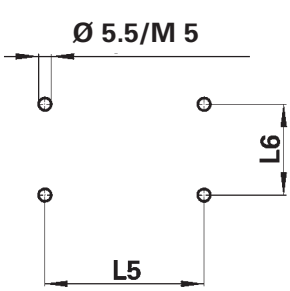

revos IT

Technical information

Applicable standards	IEC 61 984
Hoods and housings	
Material	die cast aluminum alloy
Surface	silver gray, silicon-free finish
Clamping screws	galvanically zinc-plated steel
Locking levers:	Steel, galvanically zinc-plated and dichromated
Gaskets	Neoprene (oil-resistant and anti-aging)
1 cable feed-through	Cable diameter: 2 – 10 mm
2 cable feed-throughs	Cable diameter: 9 - 15 mm
Temperature range	–40 to +100 °C
Degree of protection accord. to DIN EN 60 529	
with latched locking levers	IP 55
with appropriate cable glands	IP 65

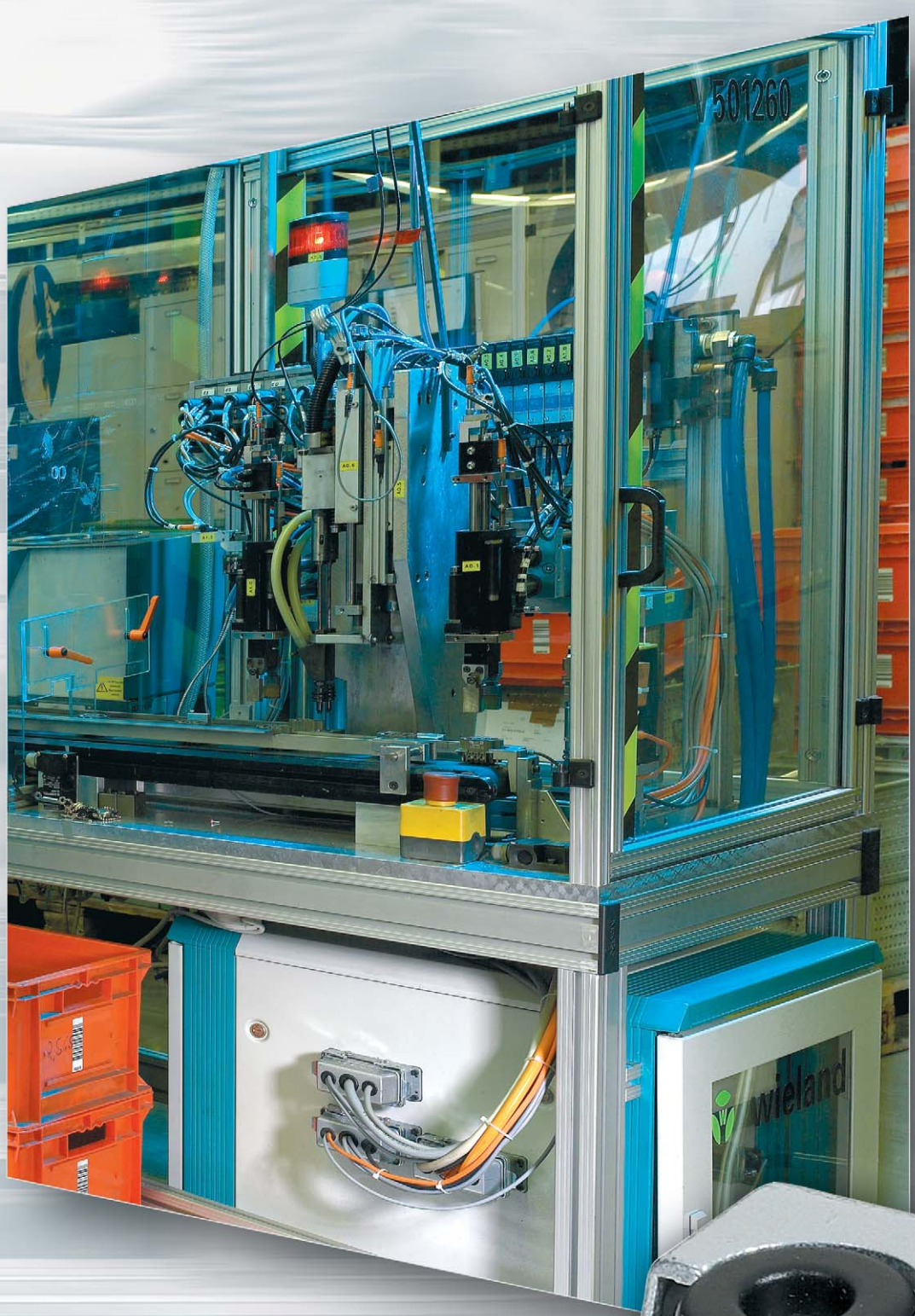

revos

Industrial Multipole Connectors

Industrial multipole connectors
Data cable feed-through

revos IT

The data cable feed-through can be separated.
The two halves, one of which has ring-shaped rubber gaskets, are closed by means of two threaded screws.
Inside each of the two halves a special rubber clamping profile properly seals the cables. Three metal clips provide the strain relief.

The **data cable feed-through** was designed to insert cables into closed housings, tightly and with strain relief, without having to disassemble the connectors. It is the ideal technique for connection cables of PLCs, data cables, measuring and encoder lines.

Each data cable feed-through has three feed-through facilities for cables of different diameters. Feed-through holes which are not used can be sealed with plastic covers.

The data cable feed-through can be snapped onto a 16pole housing without an insert. These housings normally provide enough space to insert the connectors of data cables or measuring lines without a problem.

Technical information

Hood and housing

Die cast aluminum alloy with silicon-free finish in silver gray

Temperature range:	–40 °C bis +100 °C
Clamping screws:	galvanically zinc-plated steel
Locking levers:	steel, galvanically zinc-plated and dichromated
Gaskets:	Neoprene (oil-resistant and anti-aging)

They meet the degree of protection IP 65 accord. to EN 60 529:
(IEC 60 529: 1989, 2nd edition)

2 cable feed-throughs for cable diameters of 2 mm – 10 mm

1 cable feed-through for cable diameters of 2 mm – 15 mm

revos

Type	Part no.	Stand. pack
Data cable feed-through	70.060.1628.0	10
Housing, 16pole	70.320.1628.0	1

Rubber gaskets can be ordered as replacement parts

Rubber gasket for:		
Connection range 2 mm – 10 mm	05.562.3183.0	10
Connection range 9 mm – 15 mm	05.562.3283.0	10

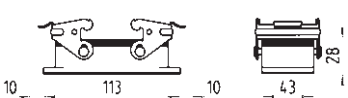

Mounting dimensions and cut-outs for open-bottom housings (mm)

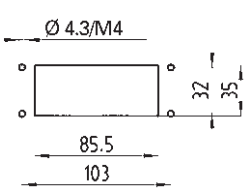

Industrial multipole connectors with single locking levers, 9 to 100pole
D-Sub connectors

revos IT

D-Sub connectors

Degrees of protection: IP 55
IP 65 with appropriate cable glands

Pole configuration	Part no.	Stand. pack	Part no.	Stand. pack	Size
	Housing with female connector		Hood with male connector		
9pole	Z7.415.0010.0		Z7.415.0235.0	10	6
2 x 9 = 18pole	Z7.415.0110.0		Z7.415.0335.0	10	6
15pole	Z7.415.0810.0		Z7.415.1035.0	10	6
2 x 15 = 30pole	Z7.415.0910.0		Z7.415.1135.0	10	6
25pole	Z7.415.1610.0		Z7.415.1935.0	10	10
15 + 25 = 40pole	Z7.415.1810.0		Z7.415.2135.0	10	10
2 x 25 = 50pole	Z7.415.1710.0		Z7.415.2035.0	10	10
37pole	Z7.415.2410.0		Z7.415.2635.0	10	16
2 x 37 = 74pole	Z7.415.2510.0		Z7.415.2735.0	10	16
50pole	Z7.415.3210.0		Z7.415.3335.0	10	16
2 x 50 = 100pole	Z7.415.3410.0		Z7.415.3535.0	10	16

revos

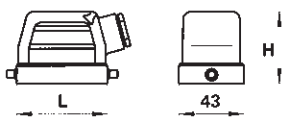

Housing size	L (mm)	H (mm)
6	60	47.5
10	73	53
16	93.5	60

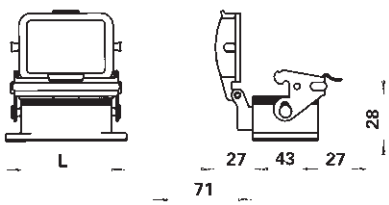

Housing size	L (mm)
6	80
10	93
16	113

Delivery standard:
Hood/housing, D-Sub connector, mounting screws and mounting plates are delivered unassembled.

Hood with M 20 cable gland

The contacts are nickle-plated and hard-gold-plated in the contact area.

Current carrying capacity per contact with ambient temperatures of:	+ 20 °C	5 A
	+ 70 °C	3 A
	+ 100 °C	1.5 A
Solder connection	max. 0.5 mm²	
Rated voltage	40 V/1 kV/2	

Mounting dimensions and cut-outs for open-bottom housings (mm)

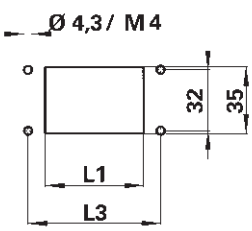

Housing size	L1 (mm)	L3 (mm)
6	52	70
10	65	83
16	85.5	103

Industrial multipole connectors

revos MOT

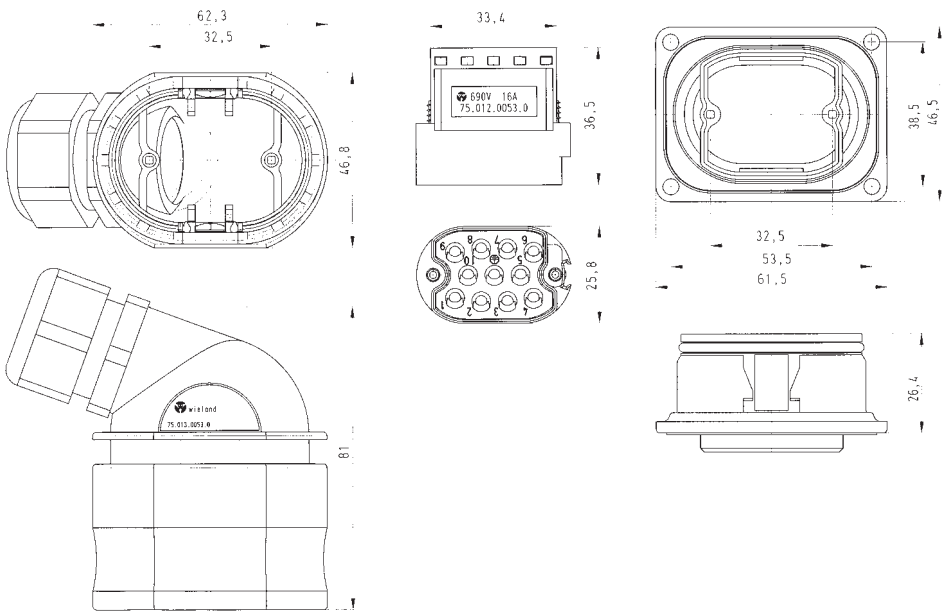

600 V UL/CSA

690 V, 16 A IEC 61 984

Number of poles		Thread	Number of poles	≥Øk in mm	Approvals	Cable entry side	Stand. pack	Part no.
	Hood with IP 65 cable gland	M 25	10pole 10pole			narrow side	10	75.013.0051.0
	Hood with compression gland	M 25	10pole			narrow side	10	75.013.0051.2
	Housing		10pole + ground			open-bottom	10	75.013.5051.0
	Female insert		10pole + ground				10	75.012.0053.0
	Male insert		10pole + ground				10	75.012.5053.0
	Cable gland, standard	M 25 x 1.5		9 – 16				Z5.507.1453.1
	Cable gland	M 25 x 1.5		13 – 18				Z5.507.1553.1

revos

Contacts for crimp version

	Ø in mm²		Part no.	Stand. pack	Ø in mm²		Part no.	Stand. pack
			tin-plated				gold-plated	
Female contacts	0.5	20 AWG	02.123.7021.0	200	0.5	20 AWG	02.123.7001.0	upon request
	0.75 – 1	18 AWG	02.123.7121.0	200	0.75 – 1	18 AWG	02.123.7101.0	upon request
	1.5	16 AWG	02.123.7221.0	200	1.5	16 AWG	02.123.7201.0	upon request
	2.5	14 AWG	02.123.7321.0	200	2.5	14 AWG	02.123.7301.0	upon request
	4	12 AWG	02.123.7421.0	200	4	12 AWG	02.123.7401.0	upon request
Male contacts	0.5	20 AWG	05.543.7021.0	200	0.5	20 AWG	05.543.7001.0	upon request
	0.75 – 1	18 AWG	05.543.7121.0	200	0.75 – 1	18 AWG	05.543.7101.0	upon request
	1.5	16 AWG	05.543.7221.0	200	1.5	16 AWG	05.543.7201.0	upon request
	2.5	14 AWG	05.543.7321.0	200	2.5	14 AWG	05.543.7301.0	upon request
	4	12 AWG	05.543.7421.0	200	4	12 AWG	05.543.7401.0	upon request
Crimping tool			95.101.0800.0	1				
Crimping die "B"			05.502.2100.0	1				
Contact positioner "3"			05.502.3300.0	1				
Extraction tool			05.502.3500.0	1			silver-plated upon request	

Technical information:

Rated current:	16 A
Rated voltage:	690 V
Nominal voltage accord. to UL:	600 V
Nominal voltage accord. to CSA:	600 V
Rated cross section:	0.5 – 4 mm² 20 – 12 AWG
Pollution degree:	3
Rated peak voltage	8 kV
Temperature range:	–40 °C to +80 °C
Flammability accor. to UL 94:	
Inserts:	V0
hoods/housings:	V2
Connection range:	9 – 16 mm 13 – 18 mm
Connection style:	crimp connection
Degree of protection:	IP 65
Color:	inserts in gray RAL 7035 hoods/housings in black RAL 9005
Material:	Polyamide

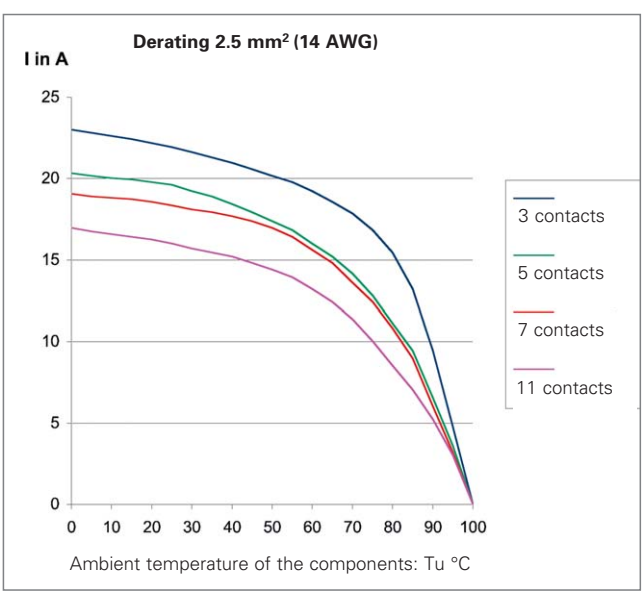

Industrial multipole connectors
24pole

revos SLIDE

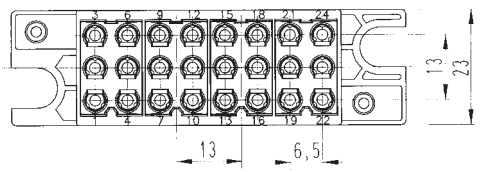

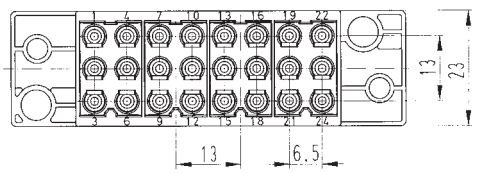

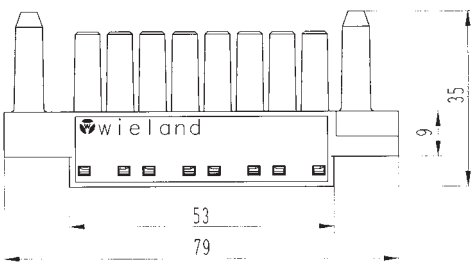

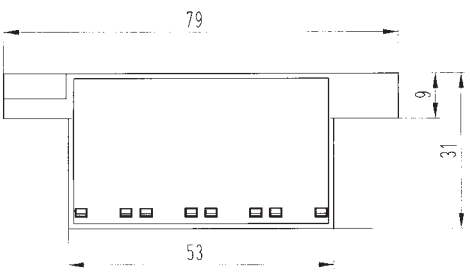

250 V 10 A IEC 61 984

	Number of poles	Approvals	Stand. pack	Part no.
Female insert	24pole	pending	100	99.700.6905.5
Male insert	24pole	pending	100	99.701.6905.5

revos

Contacts for crimp version

	Ø mm²	Part no.	Stand. pack
		silver-plated	
Female contacts	1.5 mm² 16 AWG	02.125.1121.0	100
Male contacts	1.5 mm² 16 AWG	05.544.5621.0	100
Crimping tool		95.101.0800.0	1
Crimping die "B"		05.502.2100.0	1
Contact positioner "3"		05.502.3300.0	1
Extraction tool for the contacts		05.502.3500.0	1

Cut-out

Female connector

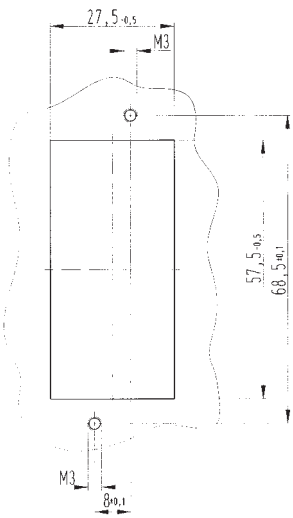

Male connector

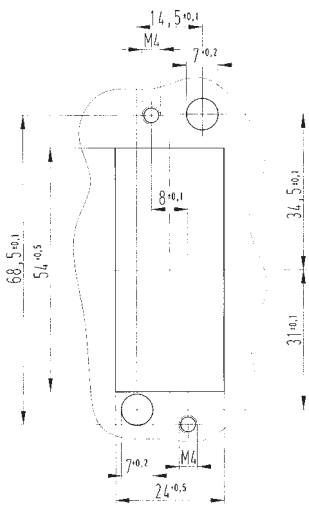

Technical information:

Rated current:	10 A
Rated voltage:	250 V
Rated cross section:	1.5 mm² 16 AWG
Pollution degree:	3
Rated peak voltage	4 kV
Temperature range:	–20 °C to +80 °C
Flammability accor. to UL 94:	V0 50 (80) °C see derating
Degree of protection:	IP 20
Connection style:	crimp connection
Material:	Polyamide
Approvals:	UL/CSA pending

Multipole connectors 99.700.6905.0/99.701.6905.5

max. current 10 A

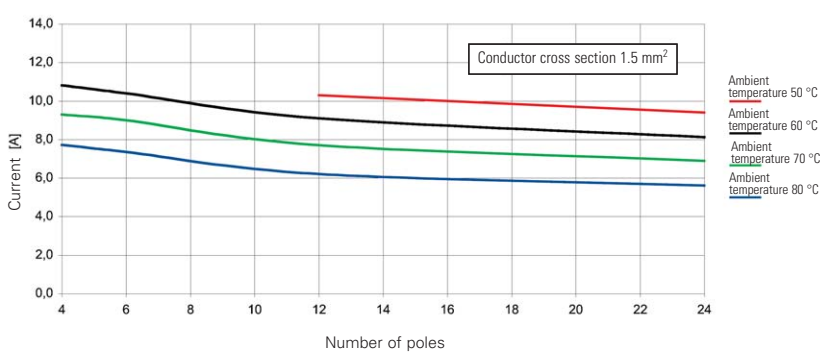

This curve does not apply for intermittent currents

Industrial multipole connectors 6/10/16/24/48pole

revos Ex

Technical information

■ **Approvals**	BVS
■ **Applicable standards**	IEC 61 984
■ **Contact inserts**	
Rated current	16 A
Rated voltage	90 V
Pole configurations	6-, 10-, 16-, 24-, 48pole (2x24), + ground
Screw connection	0.5 – 2.5 mm^2 / 20 – 12 AWG
Degree of pollution	3
Temperature range	–40 to +110 °C
■ **Contacts**	
Material	copper alloy
Surface	tin-plated
■ **Hoods and housings**	
Material	die cast aluminum alloy
Surface	light blue, silicon-free finish
Locking levers	zinc-plated steel
Gaskets	NBR
Temperature range	–40 to +110 °C
Degree of protection accord. to DIN EN 60 529	IP 55

revos

Industrial Multipole Connectors

Industrial multipole connectors
6/10/16/24/48pole

revos Ex

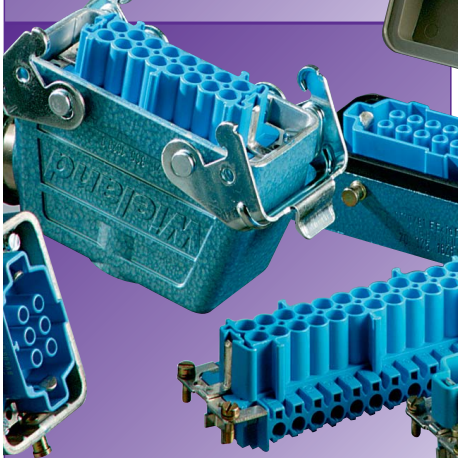

System description

- ❒ For applications in mining, machine construction, control and switchgear building, especially for use in intrinsic electrical systems
- ❒ BVS-tested and approved
- ❒ Reliable connector elements for power and control current lines
- ❒ Outstanding feature:a robust die cast zinc housing, color blue
- ❒ Protection of the internal contact-inserts against mechanical and hazardous industrial influences
- ❒ According to EN 60 529, IEC 60 529, the interlocked hoods and housings provide the degree of protection IP 55 (dust ingress and jet water)

Protective cover

- ❒ Hoods and housings with / without hinged protective cover

Cable to cable couplings

- ❒ low and high designs
- ❒ Locking with 1 lever on the broad side (6pole and 48pole)
- ❒ Locking with 2 levers on the narrow side (10, 16 and 24pole)

Female and male connector inserts:

- ❒ Insulating parts made from fiberglass reinforced Polyamide (technical information: see ***facts*** & DATA)

Material

Housing:

- ❒ Hoods/housings: die cast zinc alloy, with hammer finish in blue

Housing:

- ❒ with open-bottom housing: cable entry at the bottom
- ❒ with closed-bottom housing: narrow-side cable entry
- ❒ Connector with open-bottom housing; housing with protective cover attached by hinged joint
- ❒ Connector with closed-bottom housing; housing with protective cover attached by hinged joint
- ❒ Connector with compression gland

DQS certificates for all product families

- ❒ Quality standard as per DIN ISO 9001
- ❒ in Development, Production, Assembly
- ❒ Continued control of the quality standard by means of regular internal and external quality audits
- ❒ Compatible with certificates of other countries:
  - BSI Certificate, Great Britain
  - SQS Certificate, Switzerland
  - Aib-Vincotte Certificate, Belgium
  - ÖQS Certificate, Austria

revos

❒ Combination with flat open-bottom housing in die cast zinc alloy

❒ Combination with high closed-bottom housing in die cast zinc alloy

❒ Combination with low open-bottom housing in die cast zinc alloy with protective cover

❒ Combination with high closed-bottom housing in die cast zinc alloy with protective cover

❒ Combination of 2 hoods as cable to cable coupling, with narrow-side locking levers, die cast zinc alloy

ZERTIFIZIERTES
DIN ISO 9001
QUALITÄTSSICHERUNGSSYSTEM
Reg.-Nr. 14 194-02

Industrial multipole connectors
Female/male inserts

revos Ex

90 V

Degree of protection: IP 55
Multipole connectors for intrinsic systems EEx ia, color: blue

		Rated current	Cross section	Approvals	Wire strip length	Stand. pack
Screw connection	Female insert	16 A	0.5 – 2.5 mm² 20 – 12 AWG	EExia	7 mm	10
Screw connection	Male insert	16 A	0.5 – 2.5 mm² 20 – 12 AWG	EExia	7 mm	10

revos

6pole + ground	10pole + ground	16pole + ground	24pole + ground	48pole + ground	
Part no.	Part no.	Part no.	Part no.	Part no.	
72.300.0653.9	72.300.1053.9	72.300.1653.9	72.300.2453.9	72.300.4853.9	
72.310.0653.9	72.310.1053.9	72.310.1653.9	72.310.2453.9	72.310.4853.9	

Modular industrial multipole connectors
Hoods with single and double locking levers

revos Ex

Version A

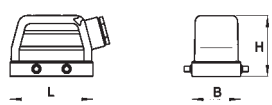

Version C

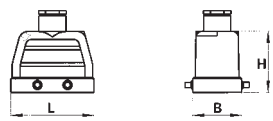

90 V

Degree of protection: IP 55
Multipole connectors for intrinsic systems EEx ia

Number of poles	Thread	Cable gland type	Dimensions in mm	L	W	H	Stand. pack
Size **6** for multipole connectors **6pole + ground**	Pg 13.5	7 with Pg thread 9 with strain relief		60	43	47.5	1
	Pg 16	7 with Pg thread 9 with strain relief		60	43	47.5	1
Size **10** for multipole connectors **10pole + ground**	Pg 16	7 with Pg thread 9 with strain relief		73	43	53	1
	Pg 21	7 with Pg thread 9 with strain relief		73	43	53	1
Size **16** for multipole connectors **16pole + ground**	Pg 21	7 with Pg thread 9 with strain relief		93.5	43	60	1
	Pg 29	7 with Pg thread 9 with strain relief		93.5	43	60	1
Size **24** for multipole connectors **24pole + ground**	Pg 21	7 with Pg thread 9 with strain relief		120	43	70	1
	Pg 29	7 with Pg thread 9 with strain relief		120	43	70	1
Size **48** for multipole connectors **48pole + ground**	Pg 29	7 with Pg thread 9 with strain relief		132	90	107	1
	Pg 32	7 with Pg thread 9 with strain relief		132	90	107	1

revos

Version D

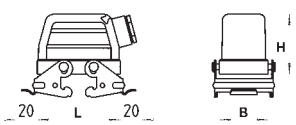

Version F

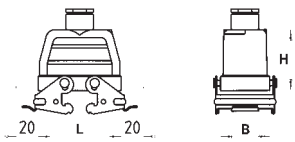

Hood with cable gland Version A	Hood with cable gland Version C	Hood with cable gland and locking levers Version D	Hood with cable gland and locking levers Version F	
Part no.	Part no.	Part no.	Part no.	
70.350.0628.7 70.360.0628.9	70.352.0628.7 70.362.0628.9			
70.363.0628.9	70.354.0628.7 70.364.0628.9			
70.350.1028.7 70.360.1028.9	70.352.1028.7 70.362.1028.9	70.355.1028.7 70.365.1028.9	70.367.1028.9	
70.363.1028.9	70.354.1028.7 70.364.1028.9	70.368.1028.9	70.369.1028.9	
70.350.1628.7 70.360.1628.9	70.352.1628.7 70.362.1628.9	70.355.1628.7 70.365.1628.9	70.367.1628.9	
70.363.1628.9	70.354.1628.7 70.364.1628.9	70.368.1628.9	70.359.1628.7 70.369.1628.9	
70.350.2428.7 70.360.2428.9		70.365.2428.9	70.367.2428.9	
70.363.2428.9	70.354.2428.7	70.358.2428.7 70.368.2428.9		
70.350.4828.7 70.360.4828.9	70.352.4828.7 70.362.4828.9			
70.353.4828.7	70.354.4828.7 70.364.4828.9			

Modular industrial multipole connectors
Housings with single and double locking levers

revos Ex

Version a

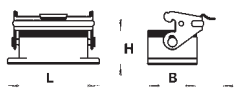

Version b

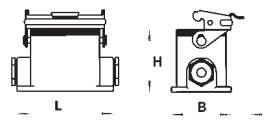

Version c

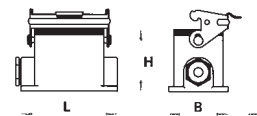

Version d

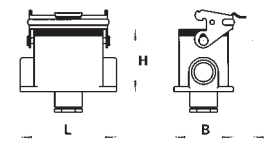

Version i

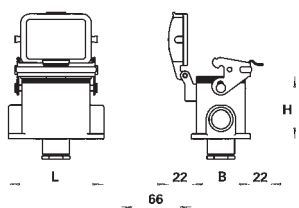

Open-bottom housing

Version a

Closed-bottom housing with two narrow-side entry cable glands

Version b

Closed bottom housing with one narrow-side entry cable gland on the left

Version c

90 V

Degree of protection: IP 55
Multipole connectors for intrinsic systems EEx ia

Number of poles	Thread	Cable gland type	L	W	H	Stand. pack	Part no.	Part no.	Part no.
Housing size **6** for multipole connectors **6pole + ground**		9 with cable gland	80	43	28	1	70.320.0628.9		
	Pg 16		84	52	54.5	1		70.330.0628.9	70.331.0628.9
Housing size **10** for multipole connectors **10pole + ground**		9 with cable gland	93	43	28	1	70.320.1028.9		
	Pg 16		94	52	54.5	1		70.330.1028.9	70.331.1028.9
Housing size **16** for multipole connectors **16pole + ground**			113	43	28	1	70.320.1628.9		
Housing size **24** for multipole connectors **24pole + ground**		9 with cable gland	140	43	44	1	70.320.2428.9		
	Pg 21		144	52	56.5	1		70.330.2428.9	70.331.2428.9
Housing size **48** for multipole connectors **48pole + ground**			165	90	44	1	70.320.4828.9		
	Pg 29	9 with cable gland	146	120	99	1			70.331.4828.9
	Pg 36	9 with strain relief	146	120	99	1			

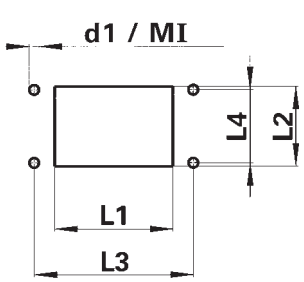

Mounting dimensions and cut-outs for open-bottom housings

Housing size	Cut-out (mm)		Mounting dimensions (mm)			
	L1	L2	L3	L4	d1 (mm)	MI
6	52	35	70	32	4.3	M 4
10	65	35	83	32	4.3	M 4
16	85.5	35	103	32	4.3	M 4
24	112	35	130	32	4.3	M 4
48	117	81	148	70	6.4	M 6

revos

Version e

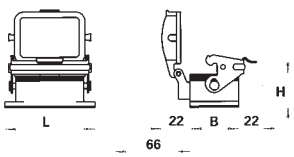

Version f

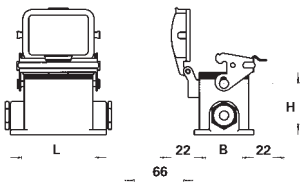

Version g

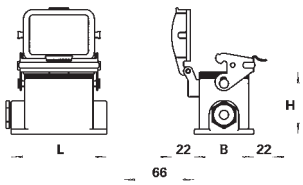

Version h

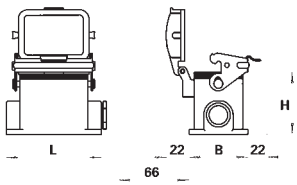

Closed-bottom housing with bottom entry cable gland Version d	Open-bottom housing with protective cover Version e	Closed-bottom housing with two narrow-side entry cable glands and protective cover Version f	Closed bottom housing with one narrow-side entry cable gland on the left and protective cover Version g	Closed bottom housing with one narrow-side entry cable gland on the right and protective cover Version h	Closed bottom housing with bottom entry cable gland and protective cover Version i
Part no.	Part no.	Part no.	Part no.	Part no.	Part no.
70.333.0628.9	70.325.0628.9	70.340.0628.9	70.341.0628.9	70.342.0628.9	70.343.0628.9
70.333.1028.9	70.325.1028.9	70.340.1028.9	70.341.1028.9	70.342.1028.9	70.343.1028.9
	70.325.1628.9				
70.333.2428.9	70.325.2428.9	70.340.2428.9	70.341.2428.9	70.342.2428.9	70.343.2428.9
	70.325.4828.9		70.341.4828.9		
			70.344.4828.9		

Housing size	L5 (mm)	L6 (mm)	d2 (mm)	MII
6	70	40	5.5	M 5
10	82	40	5.5	M 5
16	105	45	5.5	M 5
24	132	45	5.5	M 5
48	111	106	6.5	M 6

Mounting dimensions for closed-bottom housings

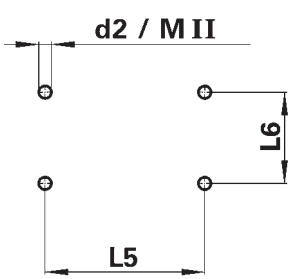

Special combinations for cable to cable couplings

revos Ex

		Female insert	Male insert	Hood with strain relief, with locking levers and gasket Pos. 1	Hood with strain relief without locking levers Pos. 2
Number of poles	Cable entry size	Part no.	Part no.	Part no.	Part no.
6 + ground	Pg 13.5	72.300.0653.9	72.310.0653.9	99.701.3329.7	70.362.0628.9
6 + ground	Pg 16	72.300.0653.9	72.310.0653.9	99.721.3329.7	70.364.0628.9
10 + ground	Pg 16	72.300.1053.9	72.310.1053.9	99.707.3329.7	70.362.1028.9
10 + ground	Pg 21	72.300.1053.9	72.310.1053.9	99.727.3329.7	70.364.1028.9
16 + ground	Pg 21	72.300.1653.9	72.310.1653.9	99.703.3329.7	70.362.1628.9
16 + ground	Pg 29	72.300.1653.9	72.310.1653.9	99.723.3329.7	70.364.1628.9
24 + ground	Pg 29	72.300.2453.9	72.310.2453.9	99.705.3329.7	70.362.2428.9
48 + ground	Pg 29	72.300.4853.9	72.310.4853.9	70.377.4828.9	70.375.4828.9

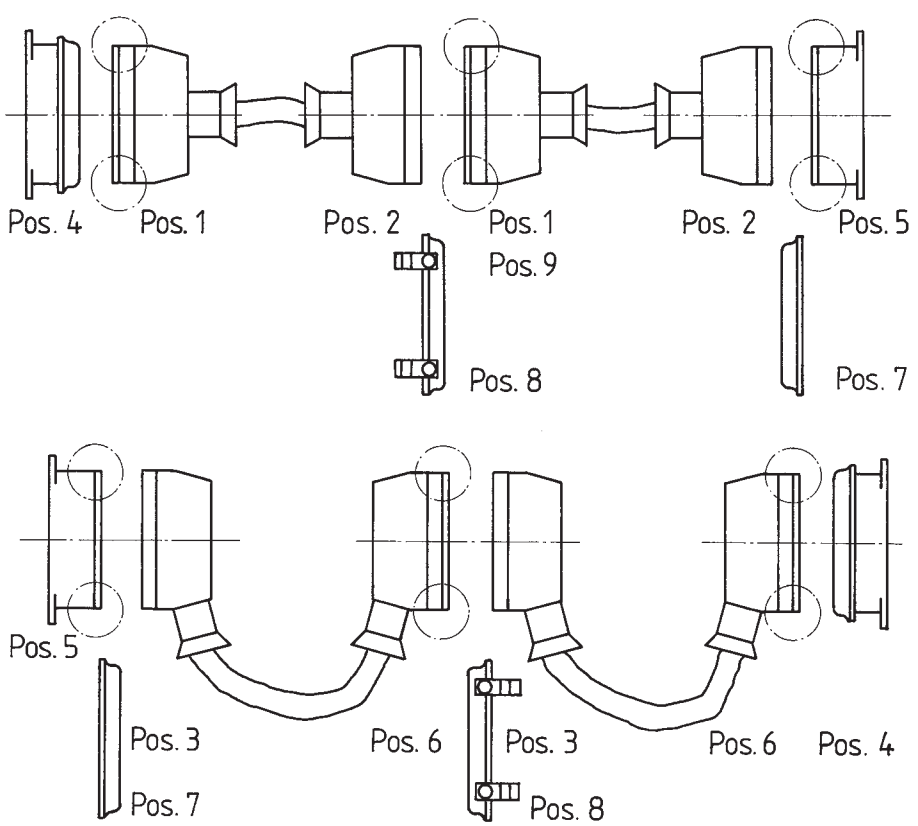

Mounting examples

revos

Hood with strain relief without locking levers Pos. 3	Open-bottom housing with protective cover gasket in the cover Pos. 4	Open-bottom housing with locking levers, with gasket Pos. 5	Hood with strain relief with locking levers and gasket Pos. 6	Hood with Pg thread only, with locking levers, with gasket Pos. 9 (do not combine with pos. 4)	Hood with Pg thread only, without locking levers Pos. 2
Part no.	Part no.	Part no.	Part no.	Part no.	Part no.
70.360.0628.9	99.700.3329.7	70.320.0628.9	99.710.3329.7	70.372.0628.7	70.352.0628.7
70.363.0628.9	99.700.3329.7	70.320.0628.9		–	70.354.0628.7
70.360.1028.9	99.706.3329.7	70.320.1028.9	99.711.3329.7	70.372.1028.7	70.352.1028.7
70.363.1028.9	99.706.3329.7	70.320.1028.9	–	–	70.354.1028.7
70.360.1628.9	99.702.3329.7	70.320.1628.9	99.713.3329.7	70.372.1628.7	70.352.1628.7
70.363.1628.9	99.702.3329.7	70.320.1628.9	–	–	70.354.1628.7
70.360.2428.9	99.704.3329.7	70.320.2428.9	99.716.3329.7	70.372.2428.7	70.352.2428.7
70.360.4828.9		70.320.4828.9		70.372.4828.7	70.352.4828.7

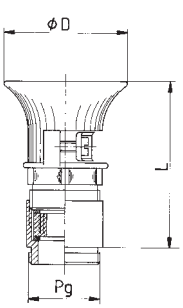

❒ Strain relief screw with locking ring

Part no.	Cable entry sizes		Ø (mm)
	L	Pg	Ø D
Z5.509.0529.0	44.6	13.5	35
Z5.508.8129.0	56.6	16	35
Z5.508.8229.0	63.1	21	35
Z5.508.8329.0	66.6	29	35
Z5.509.0829.0	89.6	36	81

Industrial multipole connectors
Accessories

revos

For hoods with cable glands or flared cable entries and strain reliefs we provide locking rings in the size of the various cable entries to lock the pressure screw.

Locking ring

After the pressure screw is tightened, the locking ring is slid over the hexagon head of the pressure screw and is fixed to the compression gland by means of a pan head screw. The pressure screw is now protected against accidental loosening.

If several connectors of the same pole configuration have to be mounted adjacent to each other, coding fixtures prevent them from being mismated. Only matching female and male parts can be connected. (4 coding options).
Coding pins enable six unique combinations.

Coding fixtures in combination with special coding pins provide 24 codings according to the following plan (part no. **Z5.593.4053**): (not applicable for the versions 72.3 and 72.7)

For part no.
see page 788

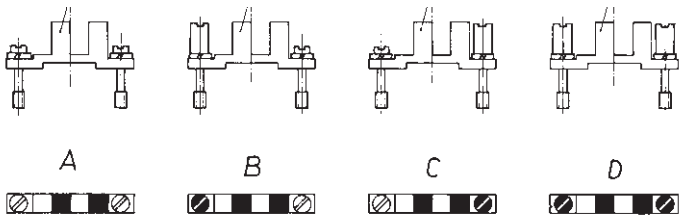

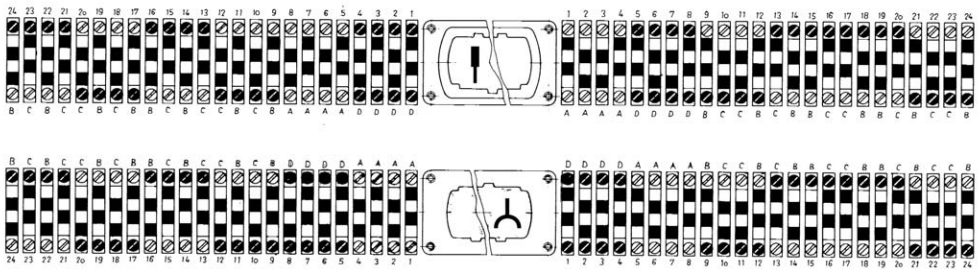

revos

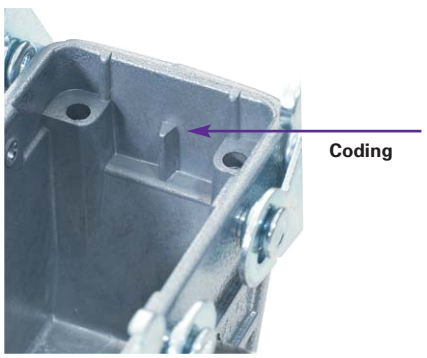

The hoods and housings for 400 V inserts are coded,
so that the female and male inserts for the series of 690/400 V and 690 V
cannot be mounted to them.

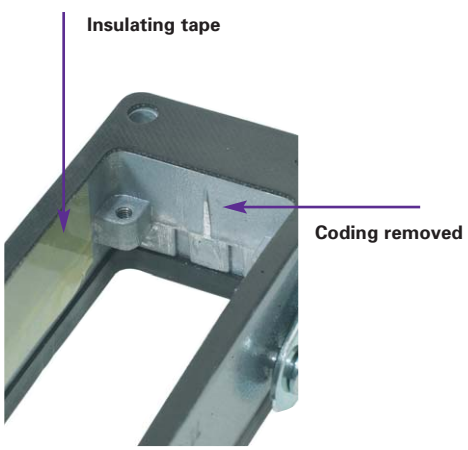

The coding ribs of the hoods and housings of series 690/400 V and 690 V
were removed. Additionally, two insulating tapes are attached inside these hoods
and housings.

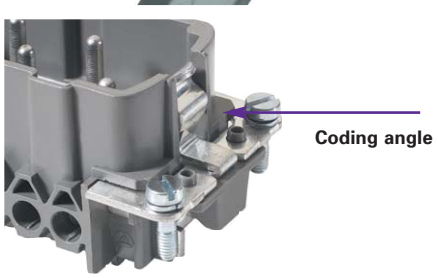

The female and male inserts of series 690/400 V and 690 V are equipped with coding
angles. They prevent that the female and male inserts of this series are mounted to the
hoods and housings for 400 V.

The 3pole, 6pole and 10pole inserts of series 690/400 V have a coding fixture which
prevents that they are plugged together with 400 V male inserts.

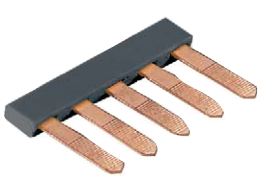

Insulated jumper bar for multipole adapters (see page 781)

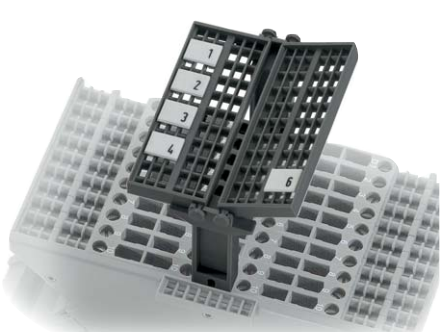

Marking tag carrier with 6 digits for open-bottom housings (see page 790)
(without marking tags)

Accessories for multipole connectors and multipole adapters
Metric cable threads

revos

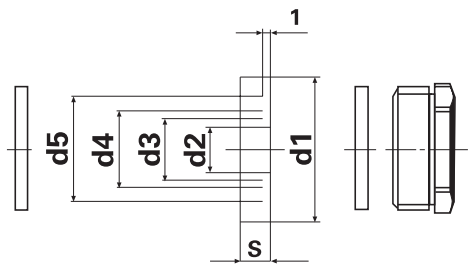

Cable gland nickel-plated brass, with circular compression gland,
IP 54 degree of protection

Metric thread	d1	d2	>Ø< in mm	d3	>Ø< in mm	d4	>Ø< in mm	d5	>Ø< in mm	Part no.	Stand. pack
M 16	13.8	3	2.0 – 4.5	6	5.0 – 7.5	9	8.0 – 10.5	–	–	Z5.507.2121.0	10
M 20	17.6	4	3.0 – 5.5	7	6.0 – 8.5	10	9.0 – 11.5	13	12.0 – 14.5	Z5.507.2221.0	10
M 25	22.6	8.5	7.5 – 10.0	11.5	10.5 – 13.0	14.5	13.5 – 16.0	17.5	16.5 – 19.0	Z5.507.2321.0	10
M 32	29.6	16	15.0 – 17.5	19	18.0 – 20.5	22	21.0 – 23.5	25	24.0 – 26.5	Z5.507.2421.0	10

Cable gland nickel-plated brass, with internal strain relief and gasket on the connection thread
IP 68 degree of protection

Metric thread	>Ø< in mm	mm	Thread length in mm	Part no.	Stand. pack
M 20 x 1.5	8.0 – 13.0	22	6	Z5.507.1321.0	10
M 25 x 1.5	11.0 – 18.0	27	7	Z5.507.1521.0	10
M 32 x 1.5	15.0 – 21.0	34	8	Z5.507.1721.0	10
M 40 x 1.5	19.0 – 27.0	44	8	Z5.507.1921.0	10

Hoods and housings with a cable gland from brass and IP 68 degree of protection can be preassembled upon request and for minimum order quantities of 50 pieces.

Plastic cable gland Polyamide, gray (RAL 7035), with strain relief
IP 68 degree of protection

Metric thread	>Ø< in mm	mm	Thread length in mm	Part no.	Stand. pack
M 20 x 1.5	6.0 – 12.0	24	9	Z5.507.1353.0	10
M 25 x 1.5	7.0 – 16.0	28	11	Z5.507.1553.0	10
M 32 x 1.5	10.0 – 21.0	36	11	Z5.507.1753.0	10
M 40 x 1.5	16.0 – 28.0	46	11	Z5.507.1953.0	10

For the use of plastic glands, the housings of size 6 must have a compression gland.

revos

Cable gland nickel-plated brass, with hexagon port on the compression gland, pressure screw with strain relief and protection against bending, IP54 degree of protection

Metric thread	>Øk< in mm	gland mm	Thread length in mm	Part no.	Stand. pack
M 16 x 1.5	6.0 – 9.0	18	5	Z5.507.9521.0	10
M 20 x 1.5	9.0 – 13.5	22	6	Z5.507.9621.0	10
M 25 x 1.5	14.0 – 20.0	30	7	Z5.507.9721.0	10
M 32 x 1.5	19.0 – 29.0	39	8	Z5.507.9821.0	10

EMC cable gland nickel-plated brass, for shielded cables, with internal strain relief, consistently insulated by a gasket on the connection thread, IP 68 degree of protection

Metric thread	>Øk< in mm	mm	Thread length in mm	Part no.	Stand. pack
M 20 x 1.5	8.0 – 13.0	22	6	Z5.507.4821.0	10
M 25 x 1.5	11.0 – 18.0	30	7	Z5.507.5021.0	10
M 32 x 1.5	15.0 – 21.0	34	8	Z5.507.5221.0	10

Cable gland nickel-plated brass, with hexagon port on the compression gland, pressure screw with centric strain relief and protection against bending, with universal gasket

Metric thread	>Øk< in mm	mm	Thread length in mm	Part no.	Stand. pack
M 20 x 1.5	8.5 – 14.0	24	6	Z5.507.5821.0	10
M 25 x 1.5	12.0 – 20.0	34	7	Z5.507.6021.0	10
M 32 x 1.5	18.0 – 28.0	42	8	Z5.507.6221.0	10
M 40 x 1.5	24.0 – 34.0	52	8	Z5.507.6421.0	10

Hoods and housings with a cable gland from brass and IP 68 degree of protection can be preassembled upon request and for minimum order quantities of 50 pieces.

Accessories for multipole connectors and multipole adapters

revos

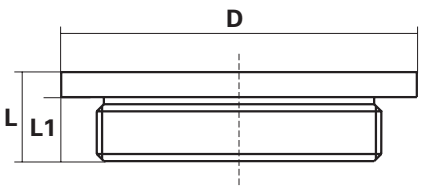

Reduction piece, nickel-plated brass

External thread	Internal thread	D	L1	L	Part no.	Stand. pack
M 20 x 1.5	M 16 x 1.5	22	6	9	05.507.9021.0	10
M 25 x 1.5	M 20 x 1.5	27	7	10	05.507.9121.0	10
M 32 x 1.5	M 25 x 1.5	34	8	11	05.507.9221.0	10
M 40 x 1.5	M 32 x 1.5	43	8	11.5	05.507.9321.0	10

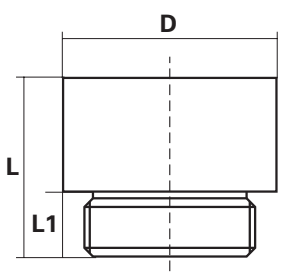

Extension piece, nickel-plated brass

External thread	Internal thread	D	L1	L	Part no.	Stand. pack
M 16 x 1.5	M 20 x 1.5	22	5	17,5	05.507.8621.0	10
M 20 x 1.5	M 25 x 1.5	27	6	20	05.507.8721.0	10
M 25 x 1.5	M 32 x 1.5	34	7	22,5	05.507.8821.0	10
M 32 x 1.5	M 40 x 1.5	42	8	24,5	05.507.8921.0	10

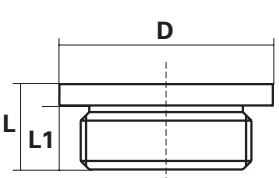

Adapter for PG-metric conversion, nickel-plated brass

External thread	Internal thread	D	L1	L	Part no.	Stand. pack
Pg 13.5	M 20 x 1.5	26	6.5	19	05.507.7621.0	10
Pg 16	M 20 x 1.5	24	6.5	9.5	05.507.7721.0	10
Pg 21	M 25 x 1.5	30	7	10	05.507.7821.0	10

revos

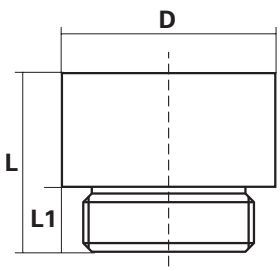

Adapter for metric-PG conversion, nickel-plated brass

External thread	Internal thread	D	L1	L	Part no.	Stand. pack
M 20 x 1.5	Pg 13.5	22	6	18.5	05.507.8121.0	10
M 20 x 1.5	Pg 16	24	6	19.5	05.507.8221.0	10
M 25 x 1.5	Pg 21	30	7	22	05.507.8321.0	10
M 32 x 1.5	Pg 29	39	8	24.5	05.507.8421.0	10

Adapter metric – NPT: Electroless nickel-plated aluminium

M 20 x 1.5 – 1/2" NPT	24	7	25	M20N02MA	10
M 20 x 1.5 – 3/4" NPT	30	7	25	M20N04MA	10
M 25 x 1.5 – 1/2" NPT	27	7	21	M25N02MA	10
M 25 x 1.5 – 3/4" NPT	30	7	25	M25N04MA	10
M 25 x 1.5 – 1" NPT	36	7	26.5	M25N06MA	10
M 32 x 1.5 – 1" NPT	36	7	26.5	M32N06MA	10

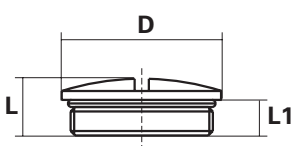

Blind piece,
metric, nickel-plated brass, with gasket from Perbunan

Metric thread	D	L1	L	Part no.	Stand. pack
M 20 x 1.5	22	6.5	9.5	05.507.4021.0	10
M 25 x 1.5	28	7	11	05.507.4121.0	10
M 32 x 1.5	35	8	12	05.507.4221.0	10
M 40 x 1.5	44	8.5	13	05.507.4321.0	10

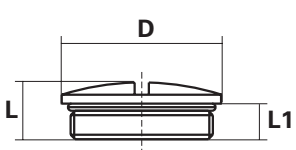

Blind piece,
metric, fibreglass reinforced Polyamide, gray

Metric thread	D	L1	L	Part no.	Stand. pack
M 20 x 1.5	24	6	9	05.507.4053.0	10
M 25 x 1.5	30	7	10.5	05.507.4153.0	10
M 32 x 1.5	38	8	12	05.507.4253.0	10
M 40 x 1.5	48	9	13	05.507.4353.0	10

Accessories for multipole connectors and multipole adapters
Protective covers

revos

for the housings	73.3xx.xxxx.x	70.3xx.xxxx.x	72.3xx.xxxx.x	Part no.	Stand. pack
		6pole	6pole	07.409.7056.0	10
		10pole	10pole	07.409.7156.0	10
	40pole	16pole	16pole	07.409.7256.0	10
	64pole	24pole	24pole	07.409.7356.0	10
Protective Polyamide covers for hoods and housings with locking levers					
with tether cord	40pole	16pole	16pole	Z7.409.8856.0	10
	64pole	24pole	24pole	Z7.409.8956.0	
with tether cord and loop	40pole	10pole	10pole	Z7.416.1656.0	10
	64pole	16pole	16pole	Z7.416.1756.0	10
		24pole	24pole	Z7.416.1856.0	10
		6pole	6pole	Z7.409.7056.0	10
		10pole	10pole	Z7.409.7156.0	10
	40pole	16pole	16pole	Z7.409.7256.0	10
	64pole	24pole	24pole	Z7.409.7356.0	10
Protective cover from Polyamide with catch spring from spring steel, galvanically tin-plated for hoods and housings without locking lever					
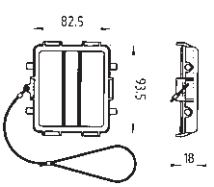					
Protective cover for 32pole housing			32pole	Z7.419.6228.0	10
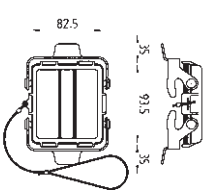					
Protective cover for 32pole housing with locking lever			32pole	Z7.419.6128.0	10
Cover with lockingbolts for housings and hoods with locking levers for ***revos*** MINI with gaskets for female inserts			Plastic	07.417.6853.0	
			Metal	07.417.6829.0	
Cover with lockingbolts for housings and hoods with locking levers for ***revos*** MINI without gaskets for female inserts			Plastic	07.417.6753.0	
			Metal	07.417.6729.0	

revos

	Number of poles	Part no.	Stand. pack
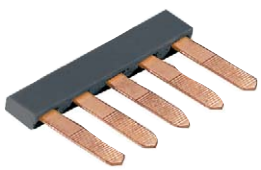 Insulated jumper bar for multipole adapters of series xx.xxx.xxxx.3 and xx.xxx.xxxx.4	2pole	Z7.256.0227.0	10
	3pole	Z7.256.0327.0	10
	4pole	Z7.256.0427.0	10
	5pole	Z7.256.0527.0	10
	6pole	Z7.256.0627.0	10
	7pole	Z7.256.0727.0	10
	8pole	Z7.256.0827.0	10
	9pole	Z7.256.0927.0	10
	10pole	Z7.256.1027.0	10
	11pole	Z7.256.1127.0	10
	12pole	Z7.256.1227.0	10
Insulated jumper bar for high-density multipole adapters	2pole	Z7.258.1225.0	10
	3pole	Z7.258.1325.0	10
	4pole	Z7.258.1425.0	10
	5pole	Z7.258.1525.0	10
	6pole	Z7.258.1625.0	10
	7pole	Z7.258.1725.0	10
	8pole	Z7.258.1825.0	10
	9pole	Z7.258.1925.0	10
	10pole	Z7.258.2025.0	10
Marking tag carrier for housings with 6 digits (without marking tags)		04.242.4453.0	250
Marking tag carrier complete with carrier (without marking tags)	40pole	Z4.242.3753.0	10
	64pole	Z4.242.4053.0	10
Marking tag carrier for hoods (without marking tags) to be driven in with a rubber mallet into the space on top of the hood		04.242.3853.0	10

Accessories
Mounting frames for connector inserts

revos

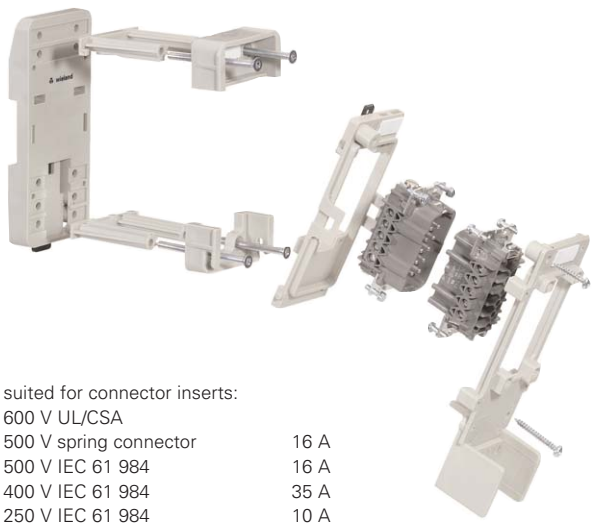

suited for connector inserts:

600 V UL/CSA	
500 V spring connector	16 A
500 V IEC 61 984	16 A
400 V IEC 61 984	35 A
250 V IEC 61 984	10 A

		Length	Part no.	Stand. pack
Size 6	Mounting frame with strain relief	125	Z5.574.0653.0	1
Size 10	Mounting frame with strain relief	125	Z5.574.1053.0	1
Size 16	Mounting frame with strain relief	125	Z5.574.1653.0	1
Size 24	Mounting frame with strain relief	150	Z5.574.2453.0	1
Size 2 x 6	Mounting frame with strain relief	150	Z5.574.1253.0	1
Sizes 6/10/16 **Size 24**	Mounting frame with base plate andfixing bolts for open-bottom housings	125	Z5.574.0053.0 Z5.574.0153.0	1 1

revos

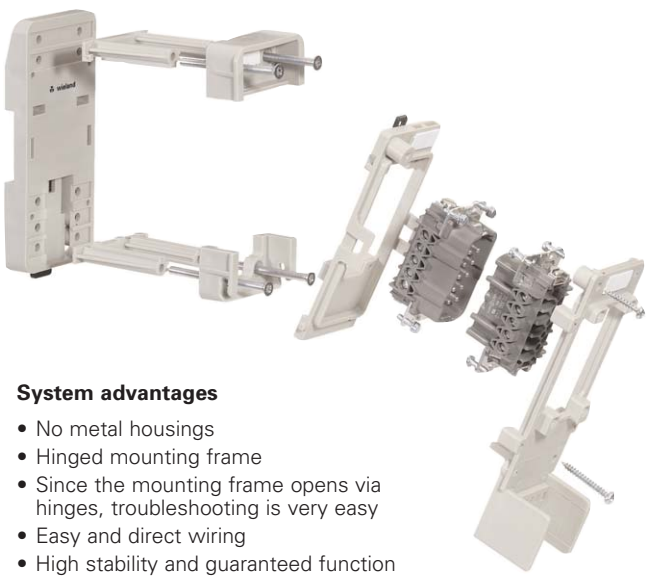

System advantages

- No metal housings
- Hinged mounting frame
- Since the mounting frame opens via hinges, troubleshooting is very easy
- Easy and direct wiring
- High stability and guaranteed function
- Degree of protection provided by the control cabinet
- Rewiring without disconnecting

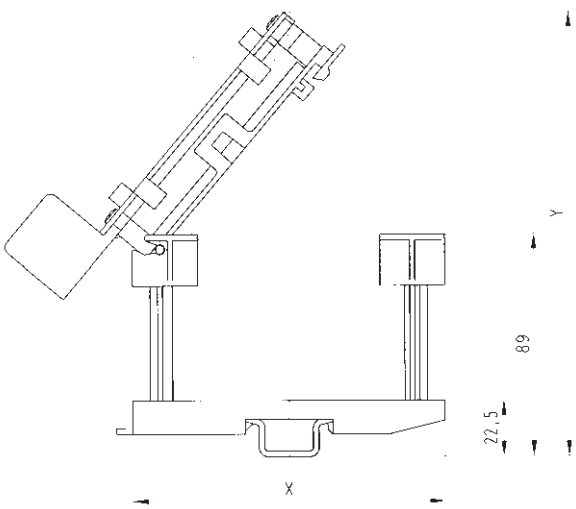

– Mounts to rail 35 x 15
– Swivels by 80° when connected
– Swivels by 120° when disconnected

Mounting frame with base plate and fixing bolts for open housings

Accessories for multipole connectors and multipole adapters
Cover plates and reduction plates

revos

	Housing size	Number of poles	Part no.	Stand. pack
Cover plates	6		07.416.6853.0	10
	10		07.416.6953.0	10
	16		07.416.7053.0	10
	24		07.416.7153.0	10

Cover plates to close prefabricated cut-outs in bulkhead walls of control cabinets

Material	Polyamide, fiberglass reinforced
Color	RAL 7032
Degr. of prot.	IP 65

Reduction plates	24/ 6		07.416.6353.0	10
	24/10		07.416.6453.0	10
	24/16		07.416.6553.0	10

Reduction plates to reduce prefabricated cut-outs of size 24 in bulkhead walls of control cabinets

Material	Polyamide, fiberglass reinforced
Color	RAL 7032
Degree of prot.	IP 65

Definition for multipole adapters
Ground connection

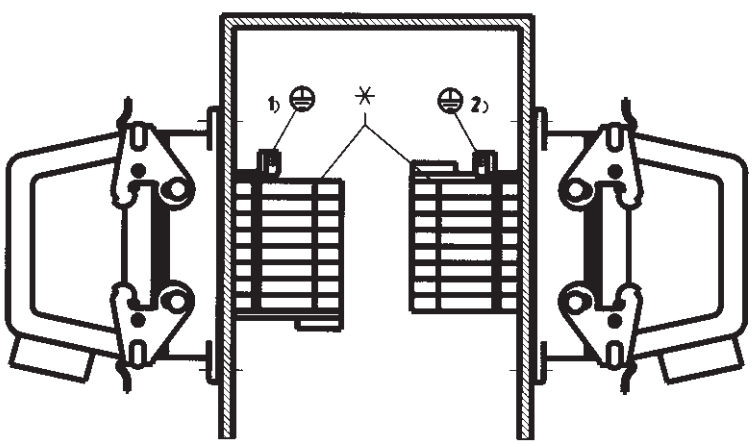

* Start of the markings 1 through ....
1 Multipole adapter in the version: ground connection left
2 Multipole adapter in the version: ground connection right

Coding options with coding pins

revos

The coding pins of version A can be used for:

❒ Screw inserts with part no.:
70.2XX.XXXX.X
70.3XX.XXXX.X
70.4XX.XXXX.X
72.2XX.XXXX.X
72.3XX.XXXX.X

❒ Crimping inserts with part no.:
70.7XX.XXXX.X
72.7XX.XXXX.X
73.7XX.XXXX.X

❒ Spring clamp inserts with part no.:
70.5XX.XXXX.X

❒ Multipole adapters (mounting to the front) with part no.:
70.0XX.XXXX.X
70.1XX.XXXX.X
72.0XX.XXXX.X
72.1XX.XXXX.X
73.9XX.XXXX.X

Codings are possible even for combinations of screw and crimping inserts, and multipole adapters.

The coding pins of version B can be used for:

❒ Combinations of screw, crimping and spring clamp inserts, and multipole adapters, combined with multipole adapters (mounting to the rear of the housings) with
part no.: 70.9XX.XXXX.X
72.9XX.XXXX.X
73.1XX.XXXX.X

1) Six coding options with coding pins

Coding pins

Order no. for version A:	05.592.0621.0	100
	05.513.4212.0	100

The use of coding pins enables six combinations for 3pole, 6pole, 10pole, 16pole and 24pole multipole connectors

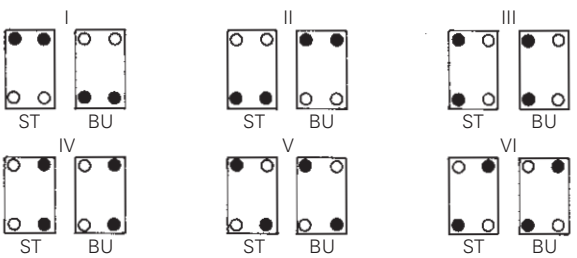

and six combinations for 20, 26, 32 and 48pole multipole connectors

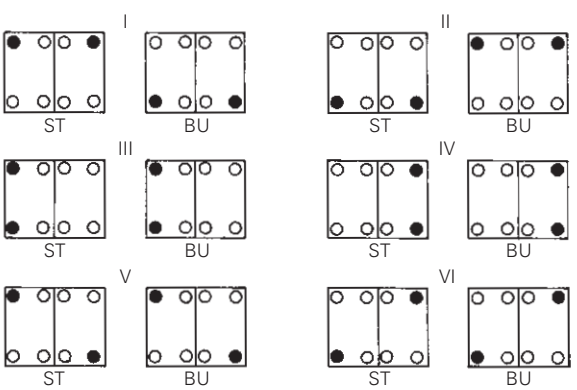

● Coding pins
○ Fixing screws

ST = male connector part
BU = female connector part

2) 72) Coding options with coding pins

Part no. for version **A:**

●	Coding bolts	05.576.6912.0*
•	Coding pin	05.576.6612.0*
○	Female coding piece	05.576.6712.0*

Part no. for version **B:**

●	Coding bolts	05.576.8512.0
•	Coding pin	05.576.8312.0
○	Female coding piece	05.576.8412.0

*) for 15pole or 25pole connectors of series 73.7... we provide only16 different codings, as the coding bolts cannot be used.

Coding

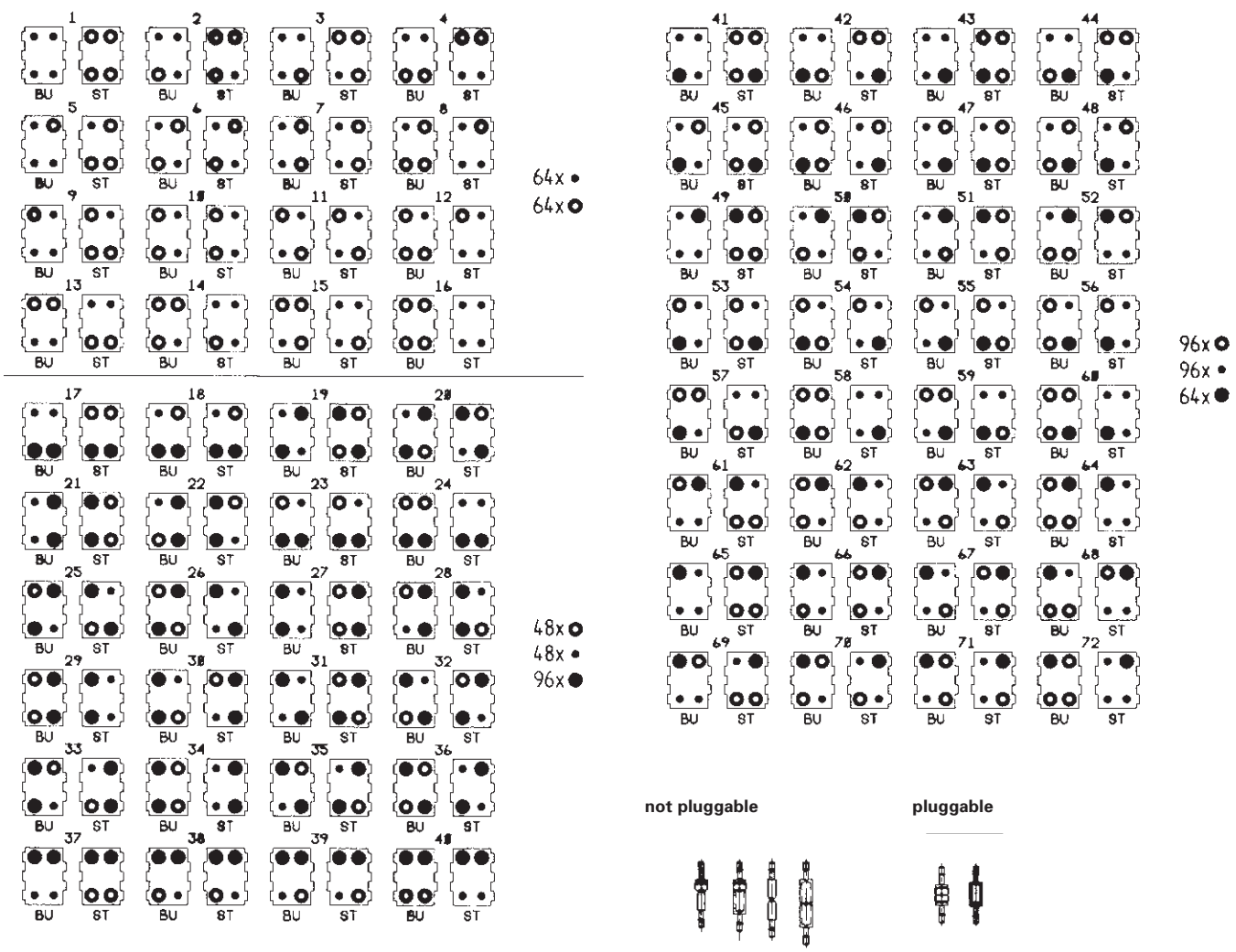

not pluggable

pluggable

Accessories for multipole connectors and multipole adapters
Coding options with coding pieces

revos

	Part no.	Stand. pack

Coding with coding pieces for:

- Screw inserts with part no.: 70.3xx.xxxx.x und 70.4xx.xxxx.x
- Crimping inserts with part no.: 70.7xx.xxxx.x
- Multipole adapters (mounting to the front) with part no.: 70.1xx.xxxx.x

Codings are possible even for combinations of screw and crimping inserts, and multipole adapters.

1. Diagram for 4 codings with coding pieces

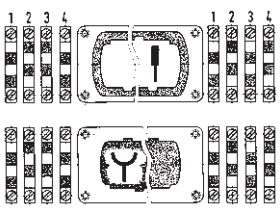

2. Diagram for 24 codings with coding pieces

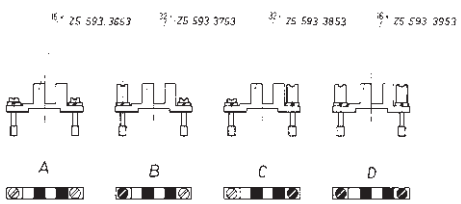

Material	Coding pieces from Polyamide	Z5.592.1252.0	50
Fixing screws	Steel, galvanically zinc-plated and dichromated		

When the coding pieces are attached to the connectors in a special order, you will get four different combinations, and only the matching inserts or multipole adapters can be connected.

Z5.593.4053.0	1

Coding pieces and special coding pins for 24 different codings

revos

Coding pieces and special coding pins for 24 different codings

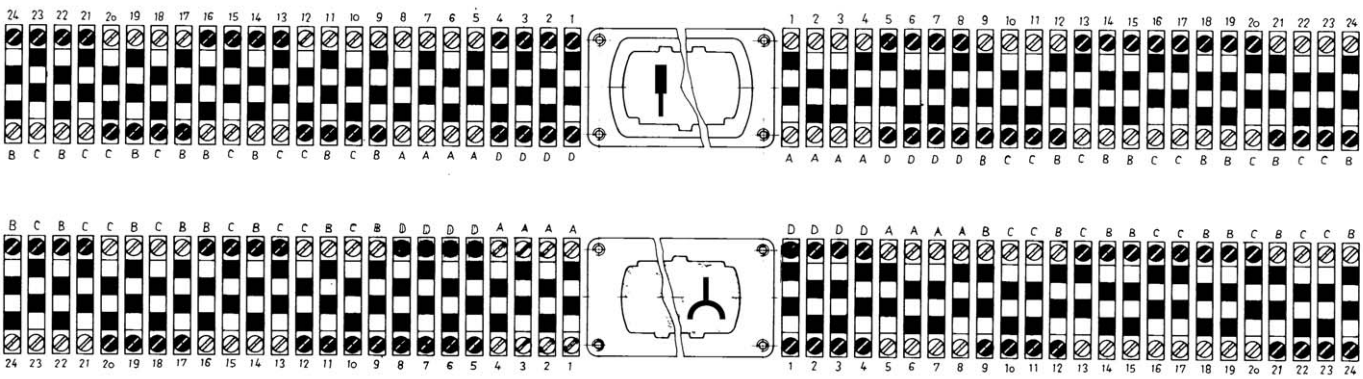

Accessories for multipole adapters
Marking accessories

revos

Material:
Polyamide 66/6
Color: black figures on white background

45° marking tag carrier

Type	Part no.	Stand. pack
2 x 4digit		
9705 A/4 W	04.242.2853.0	200

90° marking tag carrier

6 digits	04.242.3053.0	200
mounted in line for:		
6pole multip. adapter	04.242.3353.0	50
10pole multip. adapter	04.242.3453.0	50
16pole multip. adapter	04.242.3553.0	25
24pole multip. adapter	04.242.3653.0	25

Marking tag 3 digits — Single tag

Type	Part no.	Stand. pack
unmarked		
9705 A	04.242.0850.0	500
marked*		
9705 AB	04.842.0850.0	500

* Please indicate the required marking together with the part number!

Standard pack = 500 tags

Marking tag 8 digits — Single tag

unmarked		
9705 AL	04.242.1553.0	500
marked*		
9705 ALB	04.842.1553.0	500

* Please indicate the required marking together with the part number!

Standard pack = 500 tags

Marking strip 6pole through 24pole

Type	Part no.	Stand. pack
6pole, marked 2 x 1 through 6		
9705 A/6,7/2x6 B1-6	99.002.0920.8	25
10pole, marked 1 through 10		
9705 A/6,7/2x12 B1-10	99.003.0920.8	25
16pole, marked 1 through 8 and 9 through 16		
9705 A/6,7/2x12 B1-16	99.004.0920.8	25
24pole, marked 1 through 12 and 13 through 24		
9705 A/6,7/2x12 B1-24	99.005.0920.8	25
12 digits, unmarked		
9705 A/6,7/12	04.242.6753.0	25
12 digits, marked		
9705 A/6,7/12 B	04.842.6753.0	25
12 digits, marked 1 - 9		
9705 A/6,7/12 B 1-9	99.000.0920.8	25
unmarked		
9705 A/5/10	04.242.5053.0	25
marked		
9705 A/5/10 B	04.842.5053.0	25
unmarked		
9705 AL/5/10	04.242.5153.0	25
marked		
9705 AL/5/10	04.842.5153.0	25

* Please indicate the required marking
* together with the part number!

Accessories for multipole connectors and multipole adapters
Tear-off marking strips / marking tags

Material: Polyamide 66/6 white, marking in black Marking per strip		Type	Part no.	Stand. pack
unmarked		9704 A	04.241.1150.0	25
marked with the same number	1 1 1 1 1 1 1 1 1 1	9704 A/1 B	04.841.1150.0	25
	2 2 2 2 2 2 2 2 2 2	9704 A/2 B	04.841.1250.0	25
	3 3 3 3 3 3 3 3 3 3	9704 A/3 B	04.841.1350.0	25
	4 4 4 4 4 4 4 4 4 4	9704 A/4 B	04.841.1450.0	25
	5 5 5 5 5 5 5 5 5 5	9704 A/5 B	04.841.1550.0	25
	6 6 6 6 6 6 6 6 6 6	9704 A/6 B	04.841.1650.0	25
	7 7 7 7 7 7 7 7 7 7	9704 A/7 B	04.841.1750.0	25
	8 8 8 8 8 8 8 8 8 8	9704 A/8 B	04.841.1850.0	25
	9 9 9 9 9 9 9 9 9 9	9704 A/9 B	04.841.1950.0	25
	0 0 0 0 0 0 0 0 0 0	9704 A/0 B	04.841.2050.0	25
marked with consecutive numbers	1 2 3 4 5 6 7 8 9 0	9704 A/1-0 B	04.841.2150.0	25
marked with the same capital letters	A A A A A A A A A A	9704 A/AG B	04.841.2250.0	25
	B B B B B B B B B B	9704 A/BG B	04.841.2350.0	25
	C C C C C C C C C C	9704 A/CG B	04.841.2450.0	25
	D D D D D D D D D D	9704 A/DG B	04.841.2550.0	25
	E E E E E E E E E E	9704 A/EG B	04.841.2650.0	25
	F F F F F F F F F F	9704 A/FG B	04.841.2750.0	25
	G G G G G G G G G G	9704 A/GG B	04.841.2850.0	25
	H H H H H H H H H H	9704 A/HG B	04.841.2950.0	25
	I I I I I I I I I I	9704 A/IG B	04.841.3050.0	25
	J J J J J J J J J J	9704 A/JG B	04.841.3150.0	25
	K K K K K K K K K K	9704 A/KG B	04.841.3250.0	25
	L L L L L L L L L L	9704 A/LG B	04.841.3350.0	25
	M M M M M M M M M M	9704 A/MG B	04.841.3450.0	25
	N N N N N N N N N N	9704 A/NG B	04.841.3550.0	25
	O O O O O O O O O O	9704 A/OG B	04.841.3650.0	25
	P P P P P P P P P P	9704 A/PG B	04.841.3750.0	25
	Q Q Q Q Q Q Q Q Q Q	9704 A/QG B	04.841.3850.0	25
	R R R R R R R R R R	9704 A/RG B	04.841.3950.0	25
	S S S S S S S S S S	9704 A/SG B	04.841.4050.0	25
	T T T T T T T T T T	9704 A/TG B	04.841.4150.0	25
	U U U U U U U U U U	9704 A/UG B	04.841.4250.0	25
	V V V V V V V V V V	9704 A/VG B	04.841.4350.0	25
	W W W W W W W W W W	9704 A/WG B	04.841.4450.0	25
	X X X X X X X X X X	9704 A/XG B	04.841.4550.0	25
	Y Y Y Y Y Y Y Y Y Y	9704 A/YG B	04.841.4650.0	25
	Z Z Z Z Z Z Z Z Z Z	9704 A/ZG B	04.841.4750.0	25
marked with the same small letters	a a a a a a a a a a	9704 A/AK B	04.841.4850.0	25
	b b b b b b b b b b	9704 A/BK B	04.841.4950.0	25
	c c c c c c c c c c	9704 A/CK B	04.841.5050.0	25
	d d d d d d d d d d	9704 A/DK B	04.841.5150.0	25
	e e e e e e e e e e	9704 A/EK B	04.841.5250.0	25
	f f f f f f f f f f	9704 A/FK B	04.841.5350.0	25
	g g g g g g g g g g	9704 A/GK B	04.841.5450.0	25
	h h h h h h h h h h	9704 A/HK B	04.841.5550.0	25
	i i i i i i i i i i	9704 A/IK B	04.841.5650.0	25
	j j j j j j j j j j	9704 A/JK B	04.841.5750.0	25
	k k k k k k k k k k	9704 A/KK B	04.841.5850.0	25
	l l l l l l l l l l	9704 A/LK B	04.841.5950.0	25
	m m m m m m m m m m	9704 A/MK B	04.841.6050.0	25
	n n n n n n n n n n	9704 A/NK B	04.841.6150.0	25
	o o o o o o o o o o	9704 A/OK B	04.841.6250.0	25
	p p p p p p p p p p	9704 A/PK B	04.841.6350.0	25
	q q q q q q q q q q	9704 A/QK B	04.841.6450.0	25
	r r r r r r r r r r	9704 A/RK B	04.841.6550.0	25
	s s s s s s s s s s	9704 A/SK B	04.841.6650.0	25
	t t t t t t t t t t	9704 A/TK B	04.841.6750.0	25
	u u u u u u u u u u	9704 A/UK B	04.841.6850.0	25
	v v v v v v v v v v	9704 A/VK B	04.841.6950.0	25
	w w w w w w w w w w	9704 A/WK B	04.841.7050.0	25
	x x x x x x x x x x	9704 A/XK B	04.841.7150.0	25
	y y y y y y y y y y	9704 A/YK B	04.841.7250.0	25
	z z z z z z z z z z	9704 A/ZK B	04.841.7350.0	25
marked with the same symbols	+ + + + + + + + + +	9704 A/+ B	04.841.7450.0	25
	– – – – – – – – – –	9704 A/– B	04.841.7550.0	25
	/ / / / / / / / / /	9704 A// B	04.841.7650.0	25
	. . . .	9704 A/. B	04.841.7750.0	25
1 set of the same numbers = 10 x 25 strips = 2500 numbers	1 1 1 ... 0 0 0	111 bis 000	04.841.9050.0	1
1 set of cap. letters = 26 x 25 strips = 6500 letters	A A A ... Z Z Z	A bis Z GB	04.841.9150.0	1
1 set of small letters = 26 x 25 strips = 6500 letters	a a a ... z z z	a bis z KB	04.841.9250.0	1

facts & DATA

Technical explanations on:
Ferrules
Tools
Standards and certifications

facts structured in three main sections for:

- important accessories
- technical documentation and basic information in tables
- important standards and certifications

All Wieland Components which require CE general certification are CE certified, and identified with the CE logo.

Technical Explanations

Tools
Approvals

facts & DATA

facts & DATA

Preparation of conductor ends

Electric Automated crimping machine

Technical explanations

Approvals

CONTENTS

facts & DATA

- **Ferrules** according to DIN 46 228 p1 through p4 — Page 796
- **Ferrules** — Page 797
- **Tools** — Page 798
  - – Crimp contact kit — Page 798
  - – Crimping dies and contact positioners — Page 798
  - – Crimping tools for ferrules — Page 798
  - – Stripping tool, screwdrivers — Page 799

- **Crimping machine** — Page 800
- **Disposable magazines** with female and male contacts for industrial multipole connectors — Page 801

- **Types of mounting rails** — Page 802
- **Tables, technical information, explanations** — Page 804
- **DIN rail terminal blocks for increased safety (Ex terminal blocks)** — Page 824

- **Approvals** — Page 834

Ferrules with insulating sleeves
for 0.5 to 25 mm² conductors

Materials:
Sleeve:
– Polypropylene, temperature resistant up to 105 °C, tracking resistant

Tube:
E-Cu, galvanically tin-plated

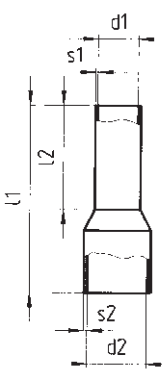

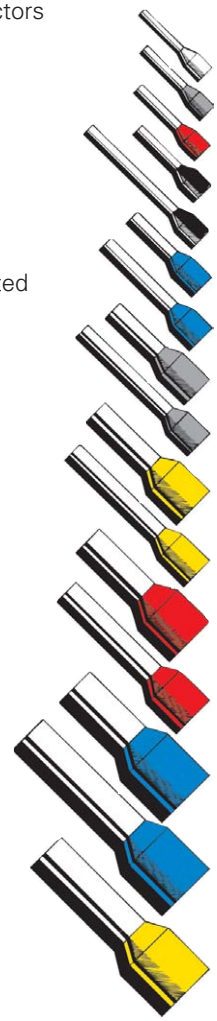

accord. to DIN 46 228 T4

Cross section mm²/AWG		Color	Part no.	Std. pack	s_2	d_2	l_1	l_2	d_1	s_1
0.50/20	norm.	white	06.600.2027.0	100	0.25	2.6	14	8	1.0	0.15
0.75/18	norm.	gray	06.600.2127.0	100	0.25	2.8	14	8	1.2	0.15
1.00/18	norm.	red	06.600.2227.0	100	0.25	3.0	14	8	1.4	0.15
1.50/16	norm.	black	06.600.2327.0	100	0.25	3.5	14	8	1.7	0.15
1.50/16	long	black	06.600.2427.0	100	0.25	3.5	24	18	1.7	0.15
2.50/14	norm.	blue	06.600.2527.0	100	0.25	4.2	14	8	2.2	0.15
2.50/14	long	blue	06.600.2627.0	100	0.25	4.2	24	18	2.2	0.15
4.00/12	norm.	gray	06.600.2727.0	100	0.30	4.8	17	10	2.8	0.20
4.00/12	long	gray	06.600.2827.0	100	0.30	4.8	26	18	2.8	0.20
6.00/10	norm.	yellow	06.600.2927.0	100	0.30	6.3	20	12	3.5	0.20
6.00/10	long	yellow	06.600.3027.0	100	0.30	6.3	26	18	3.5	0.20
10.00/8	norm.	red	06.600.3127.0	100	0.40	7.6	22	12	4.5	0.20
10.00/8	long	red	06.600.3227.0	100	0.40	7.6	28	18	4.5	0.20
16.00/6	norm.	blue	06.600.3327.0	100	0.40	8.8	24	12	5.8	0.20
16.00/6	long	blue	06.600.3427.0	100	0.40	8.8	28	18	5.8	0.20
25.00/4	half long	yellow	06.600.3527.0	50	0.40	11.2	30	18	7.3	0.20

Ferrules without insulating sleeves
for 0.5 to 16 mm² conductors
Material: E-Cu, galvanically tin-plated

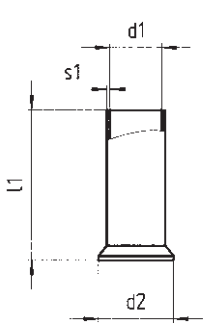

accord. to DIN 46 228 T1

0.50/20	norm.	06.600.4027.0	1000	2.1	6	1.0	0.15
0.75/18	norm.	06.600.4127.0	1000	2.3	6	1.2	0.15
1.00/18	norm.	06.600.4227.0	1000	2.5	6	1.4	0.15
1.50/16	norm.	06.600.4327.0	1000	2.8	7	1.7	0.15
2.50/14	norm.	06.600.4427.0	1000	3.4	7	2.2	0.15
4.00/12	norm.	06.600.4527.0	1000	4.0	9	2.8	0.20
6.00/10	norm.	06.600.4627.0	500	4.7	10	3.5	0.20
10.00/8	norm.	06.600.4727.0	500	5.8	12	4.5	0.20
16.00/6	norm.	06.600.4827.0	100	7.5	12	5.8	0.20
25.00/4	norm.	06.600.4927.0	100	9.5	15	7.3	0.20
35.00/2	norm.	06.600.5027.0	100	11.0	18	8.3	0.20

Ferrules

facts

Ferrules with insulating sleeves
for 0.36 to 25 mm² conductors

Materials:
Sleeve:
– Rilsan,
temperature resistant up to 130 °C,
tracking resistant

Tube:
E-Cu, galvanically tin-plated

Cross section mm²/AWG	Color	Part no.	Std. pack	s_2	d_2	l_1	l_2	d_1	s_1	
2.08/16	yellow	05.596.6127.0	1000	0.25	3.7	14.5	8.2	2.0	0.175	

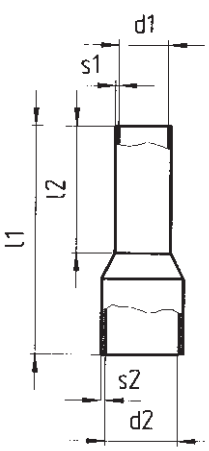

Twin ferrules with insulating sleeves

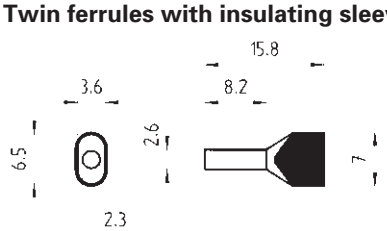

Cross section mm²/AWG	Type	Part no.	Std. pack		
2 x 1.5/16	AEI 1,5 Z-N	05.599.2027.0	500		

Modular kit for Crimp contacts

For contact crimping we provide crimping tools in a modular system:
This crimping tool system consists of the basic crimping tool and case. Additionally, you can select the crimping dies and contact positioners for your required contact type. The crimping dies and the contact positioner are easily inserted in the tool and exchanged.
You will require only one crimping tool for several contact types as you can use it with the corresponding crimping dies and contact positioners.

Crimping tool

for ferrules
0.08 – 6 mm² AWG 28 – 10

Part no.	Std. pack
95.101.0900.0	1

total length:
174 mm

- square crimping
- releasable latch
- compression adjustable

Crimping tool

for ferrules
0.75 – 10 mm² AWG 19 – 7

Part no.	Std. pack
95.101.1000.0	1

total length:
174 mm

- square crimping
- releasable latch
- compression adjustable

Cross section mm²/AWG	Part no.	Std. pack
203 mm	95.101.0800.0	1

- parallel crimping
- releasable latch
- toggle ratio

Crimp contacts, turned, Ø 3.6 for ***revos*** 4 – 10 mm²/12 – 8 AWG		
Crimping die D	05.502.2300.0	1
Contact positioner 1	05.502.3100.0	1
Crimp contacts, punched, Ø 2.5 for ***revos*** 0.5 – 2.5 mm²/20 – 14 AWG		
Crimping die C	05.502.2200.0	1
Contact positioner 2	05.502.3200.0	1
Crimp contacts, turned, Ø 2.5 for ***revos*** 0.5 – 4 mm²/20 – 12 AWG		
Crimping die B	05.502.2100.0	1
Contact positioner 1	05.502.3100.0	1
Crimp contacts, turned, Ø 1.6 for ***revos*** 0.14 – 2.5 mm²/26 – 14 AWG		
Crimping die B	05.502.2100.0	1
Contact positioner 1	05.502.3100.0	1
Crimp contacts, punched, Ø 1 for ***revos*** 0.09 – 0.5 mm²/28 – 20 AWG		
Crimping die A	05.502.2000.0	1
No contact positioner required		
Crimp contacts, turned, for 400 V – 690 V series 0.5 – 4 mm²/20 – 12 AWG		
Crimping die B	05.502.2100.0	1
Contact positioner 3	05.502.3300.0	1
Crimp contacts, punched, for multi-pole connectors 0.2 – 1.5 mm²/24 – 16 AWG		
Crimping die E	05.502.2400.0	1
Contact positioner 2	05.502.3200.0	1

facts

Crimping tool

for ferrules
10 – 25 mm² AWG 7 – 4

Part no.	Std. pack
total length: 203 mm	
95.101.1100.0	1

- parallel crimping
- releasable latch
- toggle ratio
- compression adjustable

Crimping tool

for ferrules
35 – 50 mm² AWG 2 – 1/0

Part no.	Std. pack
total length: 203 mm	
95.101.1200.0	1

- parallel crimping
- releasable latch
- toggle ratio
- compression adjustable

Stripping tool

0.08 – 10 mm² AWG 28 – 7

Part no.	Std. pack
total length: 197 mm	
95.350.0100.0	1

- adjustable length
- integrated wire cutter
- tool elements made from glass fibre reinforced Polyamide

Screwdriver

Part no.	Std. pack
06.502.4000.0	1

- blade 0.6 x 3.5 accord. to DIN 5264 B
- for WKF DIN rail spring clamp terminal blocks
- for WKC DIN rail IDC terminal blocks
- for multipole connectors with spring connection
- ergonomically shaped handle

Automated crimping machine to connect wires to female and male contacts for multipole connectors

facts & DATA

Automatic stripping and crimping machine

This machine enables wire stripping and crimping in one operation.

A sensor registers when a cable is inserted manually. Then the wire is automatically stripped and then crimped – for the user, this means a time-saving operation.

The female and male parts can be fed in on reels (0.75 – 1.5 mm^2) or by means of a reusable magazine (for 0.5 – 4 mm^2 connectors).

The following easily exchangeable tool inserts are available for multi-purpose use of the crimping machine:

– for ST 18 connectors
– for industrial multipole connectors

Dimensions: H 570 mm, W 410 mm, D 510 mm; weight: 85 kg

Power supply: 220 V ~

Part no. **95.000.0005.0**

	Description	for cross sect. in mm^2/AWG		Part no.	Std. pack
for connector versions	Disposable magazine with 25	0.5	/ 20	Z2.123.7000.0	25
	female contacts	0.75 – 1	/ 18	Z2.123.7100.0	25
70.700 ... 58.0		1.5	/ 16	Z2.123.7200.0	25
70.710 ... 58.0		2.5	/ 14	Z2.123.7300.0	25
72.700 ... 58.0		4*	/ 12	Z2.123.7400.0	25
72.710 ... 58.0					
	Disposable magazine with 25	0.5	/ 20	Z5.543.7000.0	25
	male contacts	0.75 – 1	/ 18	Z5.543.7100.0	25
		1.5	/ 16	Z5.543.7200.0	25
		2.5	/ 14	Z5.543.7300.0	25
		4*	/ 12	Z5.543.7400.0	25

* not possible with machine!

Disposable magazines with female and male contacts for industrial multipole connectors

facts

Use of tool
when installed

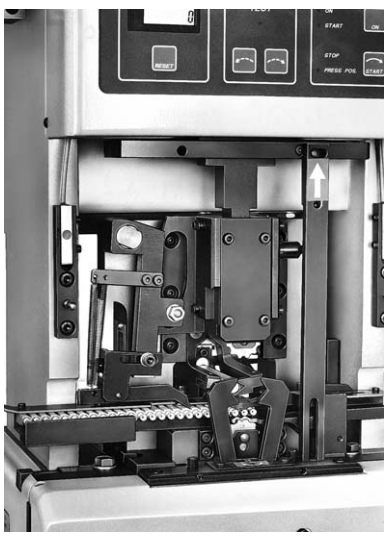

Use of tool with reels,
female and male contacts for:

multipole connectors	Part no. **95.000.0007.0**
ST 18 connectors	Part no. **95.000.0008.0**

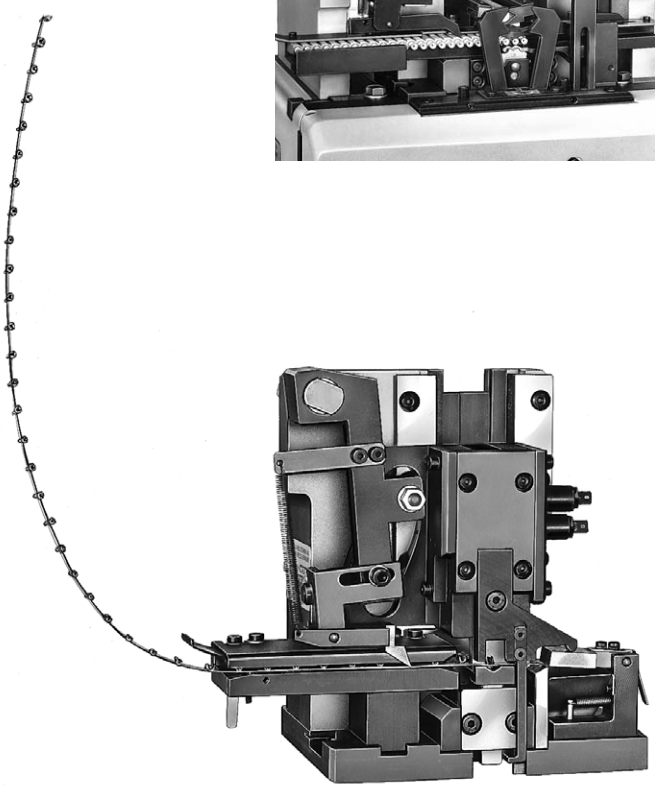

Use of tool for disposable magazines with
female and male contacts
for industrial multipole connectors

Part no. **95.000.0006.0**

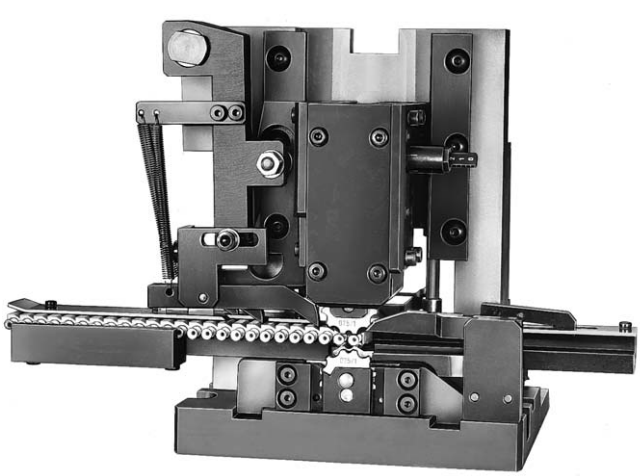

Mounting rails

facts & DATA

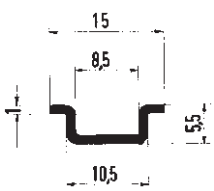

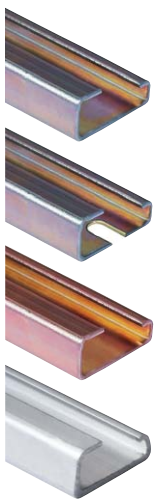

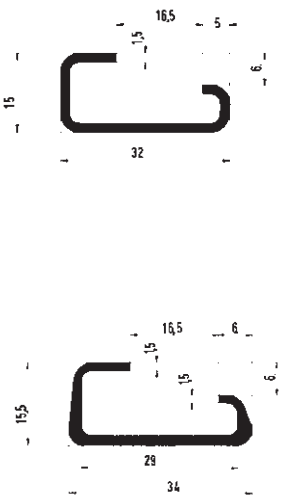

Mounting rail 15

accord. to DIN EN 60715

Type	Part no.	Std. pack
Length: 1 m	98.090.0000.0	galvan. zinc-plated steel
Length: 2 m	98.090.0015.0	galvan. zinc-plated steel
Length: 3 m	98.095.3000.0	galvan. zinc-plated steel
Mounting rail **accord. to DIN EN 60715 - 15 x 5.5** yellow chromated steel, slotted Length: 1 m		
9021 15 x 5,5 EN 60715	98.090.0000.0	1
Mounting rail same as above, but 2 m long		
9021	98.090.0015.0	10

Mounting rail 32

accord. to DIN EN 60715

Type	Part no.	Std. pack
Length: 2 m		
9006 EN 60715 G-32	98.190.0000.0	galvan. zinc-plated steel
9006 CU EN 60715 G-32	98.220.0000.0	E-Cu
slotted	98.190.1000.0	galvan. zinc-plated steel
9006 AL 32	98.210.0000.0	AL
Mounting rail **accord. to DIN EN 60715 – G-32** yellow chromated steel, unslotted Length: 2 m		
9006 EN 60715 G-32	98.190.0000.0	1
Mounting rail same as above, but slotted Length: 2 m		
9006 slotted	98.190.1000.0	1
Mounting rail similar to DIN EN 60715 – G-32, made from aluminum, unslotted Length: 2 m		
9006 AL 32	98.210.0000.0	1
Mounting rail similar to DIN EN 60715 – G-32, made from copper, unslotted Length: 2 m		
9006 CU EN 60715 G-32	98.220.0000.0	10

facts

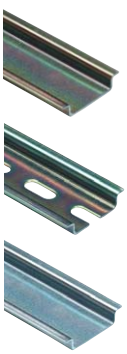

Mounting rail 35 x 7.5

accord. to DIN EN 60715

Type	Part no.	Std. pack
Length: 2 m		
35 x 27 x 7,5 EN 60715	98.300.0000.0	galvan. zinc-plated steel
35 x 27 x 7,5 1 m	98.305.1000.0	galvan. zinc-plated steel
35 x 27 x 7,5 slotted	98.300.1000.0	galvan. zinc-plated steel
Mounting rail **accord. to DIN EN 60715 - 35 x 7.5** yellow chromated steel, low version, unslotted Length: 2 m	98.300.0000.0	1
Mounting rail same as above, but 1 m long	98.305.1000.0	1
Mounting rail same as above, but slotted Length: 2 m	98.300.1000.0	1

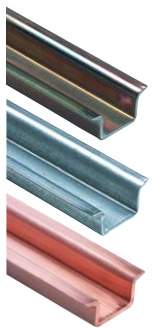

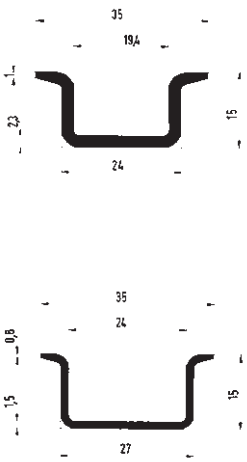

Mounting rail 35 x 15

accord. to DIN EN 60715

Type	Part no.	Std. pack
35 x 24 x 15 EN 60715	98.360.0000.0	galvan. zinc-plated steel
35 x 24 x 15 EN 60715	98.380.0000.0	E-Cu
similar to DIN EN 60715		
35 x 27 x 15	98.370.0000.0	galvan. zinc-plated steel
35 x 27 x 15 slotted	98.370.1000.0	galvan. zinc-plated steel
35 x 27 x 15 slotted 1 m	98.375.1000.0	galvan. zinc-plated steel
Mounting rail **accord. to DIN EN 60715 – 35 x 15** yellow chromated steel, 2.3 mm thick high version, unslotted Length: 2 m	98.360.0000.0	1
Mounting rail similar to DIN EN 60715 – 35 x 15, yellow chromated steel, 1.5 mm thick high version, unslotted Length: 2 m	98.370.0000.0	1
Mounting rail same as above, but slotted Length: 2 m	98.370.1000.0	1
Mounting rail same as above, but 1 m long	98.375.1000.0	10
Mounting rail DIN EN 60715 – 35 x 15 copper, 2.3 mm thick, high version, unslotted Length: 2 m	98.380.0000.0	10

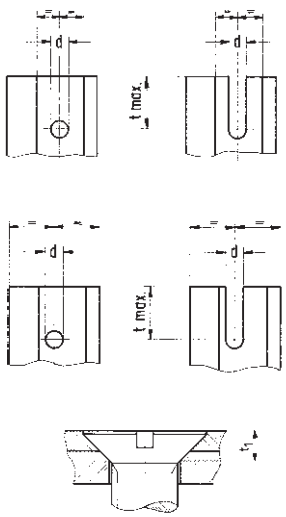

Mounting rails for OEM production

Mounting rails are generally supplied in lengths of 2 m. For OEM production we can supply mounting rails in all desired lengths, already punched with fastening holes as shown in the following table.

Version	Size of the fastening screws M 4 d	M 4 t max	M 5 d	M 5 t max	M 6 d	M 6 t max
1	4.5		5.5		6.6	
2	4.5	24	5.5	22	6.6	22
3	4.5		5.5		6.6	
4	4.5	24	5.5	22	6.6	22

Countersunk holes accord. to DIN 75 must be specially indicated. It should be observed that the measuring unit t_1 of countersunk screws M 4 and larger exceeds the material thickness of the mounting rail for the entire countersunk section. For this reason, the fastening base must provide a countersunk section also.

Information on transition from Pg to metric threads

facts & DATA

Pg threads are available upon request!

1. Basic legal conditions

The European standard EN 50 262 "Metric Cable Glands for Electrical Installation" was ratified on April 01, 1989 by CENELEC (European Committee for Electrotechnical Standardization) and put into force.

A corresponding German standard DIN EN 50 262 published in March 1999 will replace the national standards:
VDE security standard 0619 quoting standards DIN 46 319 and DIN 46 320, with a transition period until March 01, 2001.

EN 50 262 is valid in all EC countries and countries not belonging to the EC and cooperating in CENELEC will accept the standard.

The main difference in the new EN standard is its character as a security standard.
As a building standard it only defines the metric thread and its lead.

2. Effects of the change

The changeover will affect all manufacturers of cable glands, cable entries and housings for rectangular connectors.

The ten Pg sizes :

Pg 7 / 9 / 11 / 13.5 / 16 / 21 / 29 / 36 / 42 and 48

are replaced by eight metric sizes :

M 12 / 16 / 20 / 25 / 32 / 40 / 50 and 63

3. Comparison of the Pg/metric cable gland sizes

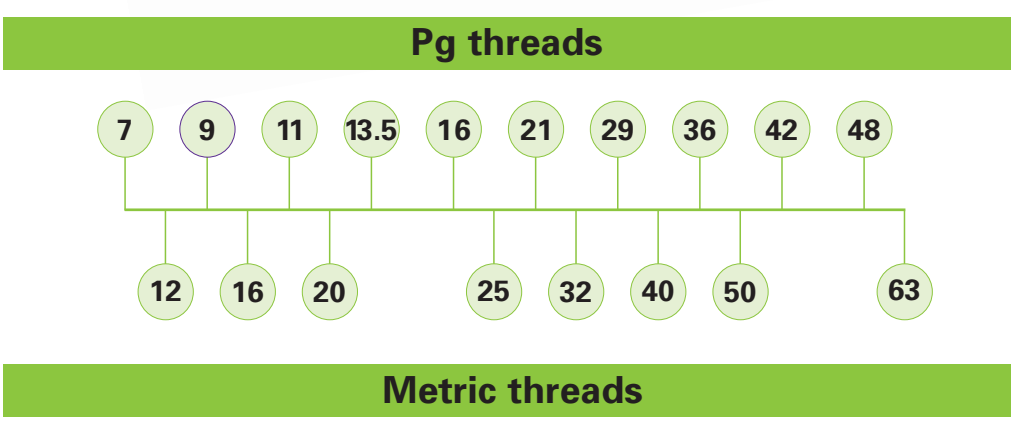

4. Assigning the Pg/metric cable glands

As the ten Pg sizes are replaced by eight metric threads, users will need to reassign the connection ranges of the cables to the metric thread sizes and housings.

5. Conversion

5.1 Comparison between Pg thread and metric thread

Pg thread	Metric thread	Preferred types
Pg 7	M 12	
Pg 9	M 16	
Pg 11	M 20	X
Pg 13.5	M 20	X
Pg 16	M 20	X
Pg 21	M 25	X
Pg 29	M 32	X
Pg 36	M 40	
Pg 42	M 50	

Hoods of the revos BASIC series with Pg thread 13.5 and 16 are also available with M 25, while PG thread 21 is also available with M 32 thread.

If you require the Pg 16 and 24 housings in M 32, you will have to use the extended height housings.

5.2 Connection range for housing versions 7x.xxx.xxxx.0

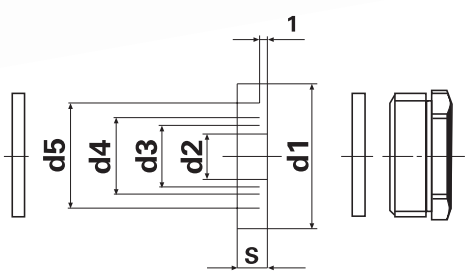

For more information visit us on the internet under www.wieland-electric.com

Please see the following table for the connection ranges of cable glands without strain relief:

Metric thread	d1	d2	Connection range in mm	d3	Connection range in mm	d4	Connection range in mm	d5	Connection range in mm
M 16	13.8	3	2 – 4.5	6	5 – 7.5	9	8 – 10.5		
M 20	17.6	4	3 – 5.5	7	6 – 8.5	10	9 – 11.5	13	12 – 14.5
M 25	22.6	8.5	7.5 – 10	11.5	10.5 – 13	14.5	13.5 – 16	17.5	16.5 – 19
M 32	29.6	16	15 – 17.5	19	18 – 20.5	22	21 – 23.5	25	24 – 26.5

5.3 Connection ranges for housing versions with flared gland 7x.xxx.xxxx.3

Metric thread	Connection range in mm
M 16	6 – 9
M 20	9 – 13.5
M 25	14 – 20
M 32	19 – 29

Information on hazardous location approval : Class I, Zone 2 Multipole Kits are available certified to CSA standard C22.2 182.3, E-79-15-95.

Please contact us to discuss your applications.

Maximum short-time current capability assigned to mounting rails

DIN EN 60 947-7-2/VDE 0611 part 3: 1996-06

Rail profile	Material	Equivalent E-Cu cross section mm²	Short-time current capability 1 s kA	Rated thermal current of a PEN busbar A
DIN rail TH 15 – 5.5 accord. to IEC 715	Steel Copper[1)] Aluminum[1)]	10 25 16	1.2 3 1.92	– 101 76
G rail G32 accord. to IEC 715	Steel Copper[1)] Aluminum[1)]	35 120 70	4.2 14.4 8.4	– 269 192
DIN rail TH 35 -7.5 accord. to IEC 715	Steel Copper[1)] Aluminum[1)]	16 50 35	1.92 6 4.2	– 150 125
DIN rail TH 35 -15 accord. to IEC 715 (made from 2.3 mm thick material)	Steel Copper[1)] Aluminum[1)]	50 150 95	6 18 11.4	– 309 232

[1)] Selected copper or aluminum alloys from the manufacturer of the terminal block layout were used to achieve the values in the table.

Electrical and thermal characteristics

					Duroplast	Thermoplast							
						Polyamide						Polybutylen-terephtalate	Poly-carbonate
Key figures / characteristics	Standard		Unit		Typ 150	PA 6	PA 6 GF	PA 66	PA 66 GF	PA 66/6	PA 66/6 GF	PBT GF	PC
Dielectric strength	VDE 0303-T21	IEC 243/1	kV / mm	tr/lf.	ca. 10	100 / 60	40 / 31	120 / 80	80 / 65	55 / 45	26 / 23	40	35
Dielectric loss tan _ at 1 MHz	VDE 0303-T4	IEC 250		tr./lf.	0.3	0.03 / 0.3	0.015 / -	0.025 / 0.2	0.02 / 0.1	0.02 / 0.3	0.016 / -	0.017	0.01
Specific feed through resistance	VDE 0303-T30	IEC 93	Ω x cm	lf.	10^{10}	10^{12}	10^{11}	10^{12}	10^{12}	10^{12}	10^{15}	10^{16}	10^{15}
Surface resistance	VDE0303-T30	IEC 93	Ω	lf.	10^{10}	10^{10}	10^{10}	10^{10}	10^{10}	10^{10}	10^{14}	10^{13}	10^{15}
Creepage	VDE0303-T1	IEC 112	CTI		600	600	550	600	550	600	325	200	225
Operating temperature RTI*	UL 746 B		°C at 1.5mm			130	140	125	115	120	140	140	130
Temperature index TI **	VDE0304 T.21	IEC 216-1	°C		120 / 80	100 / 80	185 / 160	118 / 101	157 / 139	123 / 107		130 / 120	
Lower operating temperature without mechanical stress			°C		-55	-40	-40	-40	-40	-40	-40	-40	-40
Flammability	UL 94		class/material thickness		V0	V2 / 1.5	V2 / 0.8	V2 / 0.4	V0 / 0.8	V0 / 0.4	V0 / 1.5	V0 / 0.5	V0 / 1.04
Suitability for tropical areas					good	good	good	good	good	good	good	good	good

* electrical value

** related to 50% strain resistance drop after 5,000/20,000 hours

facts

Rated connecting capacity and connectable conductor

Table 1 (IEC 60 999-1: 2000)

Rated connecting capacity	Connectable conductors and their theoretical diameters									
	Metric					AWG				
	rigid			flexible		rigid			flexible	
mm²	mm²	solid Ø mm	stranded Ø mm	mm²	Ø mm	Gauge	1) solid Ø mm	1) Class B stranded Ø mm		2) Class I, K, M stranded Ø mm
0.50	0.5	0.9	1.1	0.5	1.1	20	0.85	0.97	20	1.02
0.75	0.75	1.0	1.2	0.75	1.3	18	1.07	1.23	18	1.28
1.0	1.0	1.2	1.4	1.0	1.5	–	–	–	–	–
1.5	1.5	1.5	1.7	1.5	1.8	16	1.35	1.55	16	1.60
2.5	2.5	1.9	2.2	2.5	2.3*	14	1.71	1.95	14	2.08
4.0	4.0	2.4	2.7	4.0	2.9*	12	2.15	2.45	12	2.70
6.0	6.0	2.9	3.3	4.0	2.9*	10	2.72	3.09	–	–
10.0	10.0	3.7	4.2	6.0	3.9	8	3.43	3.89	10	3.36
16.0	16.0	4.6	5.3	10.0	5.1	6	4.32	4.91	8	4.32
25.0	25.0	–	6.6	16.0	6.3	4	5.45	6.18	6	5.73
35.0	35.0	–	7.9	25.0	7.8	2	6.87	7.78	4	7.26

* Measurement only for flexible conductors of Class 5 according to HD 383 (= IEC 228A, mod.), DIN VDE 0295

1) Nominal diameter + 5%

2) Largest diameter for conductors of Class I, K, M, + 5%

The diameter of the largest rigid and flexible conductors are based on Table 1 of HD 383 (IEC 228A) and for AWG conductors are based on ASTM B172-71, ICEA Publ. S-19-81 and ICEA Publ. S-66-516.

Theoretical diameters of the largest conductor and ratio between the rated cross section and connectable conductors

Table 1 (IEC 60 999-2: 1995)

Rated cross section	Theoretical diameter of the largest conductor					Connectable conductor
	Metric		AWG/Kcmil		AWG/Kcmil	
mm²	rigid stranded mm	flexible Class 5 mm	Gauge	rigid stranded mm	flexible mm	
35*	7.9	9.2	2	7.78	9.02	is to be indicated in the appropriate equipment specifications
–	–	–	1	8.85	10.61	
50	9.1	11.0	0	9.64	12.08	
70	11.0	13.1	00	11.17	13.54	
95	12.9	15.1	000	12.54	15.33	
–	–	–	0000	14.08	17.22	
120	14.5	17.0	250	15.34	19.01	
150	16.2	19.0	300	16.80	20.48	
185	18.0	21.0	350	18.16	22.05	
–	–		400	19.42	24.05	
240	20.6	24.0	500	21.68	26.57	
300	23.1	27.0	600	23.82	30.03	

* see IEC 60 999-1, table 1

Tables, technical data, explanations

facts & DATA

Standard cross sections of round copper conductors

Metric size ISO mm²	Comparison between AWG/kcmil und metric sizes		
	AWG	kcmil	mm²
0.1*	28		0.081
0.14*	26		0.128
0.2	24		0.205
–	22		0.324
0.5	20		0.519
0.75	18		0.82
1	–		–
1.5	16		1.3
2.5	14		2.1
4	12		3.3
6	10		5.3
10	8		8.4

Metric size ISO mm²	Comparison between AWG/kcmil und metric sizes		
	AWG	kcmil	mm²
16	6		13.3
25	4		21.2
35	2		33.6
50	(1/0) 0		53.5
70	(2/0) 00		67.4
95	(3/0) 000		85
–	(4/0) 0000		107.2
120		250	127
150		300	152
185		350	177
240		500	253
300		600	304

* not standardized

Design and dimensions of solid, stranded, fine stranded and extra fine stranded copper conductors

Excerpt from DIN VDE 0295 (06.92)

Nominal cross section	solid		stranded		fine stranded	
mm²	Diameter max. size	Number of wires	Diameter max. size	Number of wires	Diameter max. size	Number of wires Guide value
0.5	0.9	1	–	–	1.1	16
0.75	1.0	1	–	–	1.3	24
1	1.2	1	–	–	1.5	32
1.5	1.5	1	–	–	1.8	30
2.5	1.9	1	–	–	2.3	50
4	2.4	1	–	–	2.9	56
6	2.9	1	–	–	3.9	84
10	3.7	1	4.2	7	5.1	80
16	4.6	1	5.3	7	6.3	126
25	–	–	6.6	7	7.8	196
35	–	–	7.9	7	9.2	276
50	–	–	9.1	19	11	396
		–				
70	–	–	11	19	13.1	360
95	–	–	12.9	19	15.1	475
120	–	–	14.5	37	17	608
150	–	–	16.2	37	19	756
185	–	–	18	37	21	925
240	–	–	20.6	61	24	1224

Current carrying capacity of cables or wires

Recommended values for the current carrying capacity of cables or wires for fixed installation and external mounting have been taken from DIN VDE 0298 part 4/11.98 together with the modifications in draft DIN VDE 0298 part 4 A1/03.00 and are contained in supplement 1 to DIN VDE 0100 part 430, converted at 25 °C.

facts

Current carrying capacity of DIN rail terminal blocks

The following tables apply for DIN rail terminal blocks and copper conductors:
Test currents according to DIN EN 60 947-7-1/VDE 0611 part 1: 2000-05

Rated cross section mm^2	0.2	0.5	0.75	1	1.5	2.5	4	6	10	16	25	35	50	70	95	120	150	185	240	300
Test current A	4	6	9	13.5	17.5	24	32	41	57	76	101	125	150	192	232	269	309	353	415	520

The rated cross section of a DIN rail terminal block is the value indicated by the manufacturer of the connectable conductor cross section to which specific thermal, mechanical and electrical requirements refer.

The rated connecting capacity of a DIN rail terminal block is a range and/or a number of rated cross sections that the terminal block is intended for. It should be indicated for each terminal block separately.
The conductors can be rigid (solid or stranded) or flexible. The data pertains to unprepared conductor ends without ferrules and includes the largest and smallest connectable conductor cross sections.
In general it is possible to connect two conductors with the same cross section and design.

For DIN rail terminal blocks with special functions, the rated current from the manufacturer has been determined according to the requirements of the special functions. Special functions can be given by pluggable connections, isolating points, fuses, relays or electronic components. The current carrying capacity of other terminal blocks has been fixed and assessed following the above specifications according to nach EN 60 999/VDE 0609 part 1 or EN 60 998-1/VDE 0613 part 1 or
EN 60 335-1/DIN VDE 0700 part 1, as far as they are relevant.

The current carrying capacity for pluggable connectors (catalog sections ***revos*** and ***wiecon*** – for pluggable PC board connectors and headers) has been established and fixed according to DIN VDE 0627/06.86 and DIN 43 652, if applicable. Disconnect blocks, knife edged disconnect blocks and fuse blocks, cross connectors / jumper bars, jumpers and pluggable connectors should not be operated under load.

Torques

Excerpt from EN 60 947
Tightening torques for verification of mechanical stability of screw connections

Thread diameter (mm)		Tightening torque (Nm)		
Metric standard values	Diametrical range	I	II	III
2,5	≤ 2,8	0,2	0,4	0,4
3,0	> 2,8 through 3,0	0,25	0,5	0,5
–	> 3,0 through 3,2	0,3	0,6	0,6
3,5	> 3,2 through 3,6	0,4	0,8	0,8
4	> 3,6 through 4,1	0,7	1,2	1,2
4,5	> 4,1 through 4,7	0,8	1,8	1,8
5	> 4,7 through 5,3	0,8	2,0	2,0
6	> 5,3 through 6,0	1,2	2,5	3,0
8	> 6,0 through 8,0	2,5	3,5	6,0
10	> 8,0 through 10,0	–	4,0	10,0
12	> 10,0 through 12,0	–	–	14,0
14	> 12 through 15	–	–	19,0
16	> 15 through 20	–	–	25,0
20	> 20 through 24	–	–	36,0
24	> 24	–	–	50,0

Column I: Valid on for headless screws, that do not protrude from the threaded hole; also only for screws that are operated with screwdrivers having tisp smaller than the screws' thread core diameter.

Column II: applies for nuts and screws that are tightened with a screwdriver.

Column III: applies for nuts and screws that can be tightened with tools other than a screwdriver

The recommended torques were established so that within a conforming practical tolerance band, the optimal conditions are achieved for mechanical, thermal and electrical requirements.

A further increase in the tightening torque of the terminal screw does not improve the contact resistance significantly. It is therefore not advisable to tighten the terminal screws more than recommended, although the majority of the Wieland terminal blocks, especially the terminal blocks of the WK series, can withstand much higher torques.

In extreme cases, the conductor and/or terminal block can be damaged if the upper tolerance limit is exceeded.

Insulation coordination for equipment within low-voltage systems DIN VDE 0110-1/VDE 0110 part 1/04.97 (IEC 60 664-1: 1992, mod.) – Partly translated from German Version HD 625.1, S1: 1996

Main section – 1.1 Scope

1.1.1 This part of IEC 664 deals with insulation coordination for equipment within low-voltage systems . It applies to equipment for use up to 2,000 m above sea level, having a rated voltage up to AC 1,000 V with rated frequencies up to 30 kHz or a rated voltage up to DC 1,500 V.

It specifies the requirements for clearances, creepage distances and solid insulation for equipment based upon their performance criteria. It includes methods of electric testing with respect to insulation coordination.

The minimum clearances specified in this part do not apply where ionized gases occur. Special requirements for such situations may be specified at the discretion of the relevant Technical Committee.

This standard does not deal with distances
– through liquid insulation,
– through gases other than air,
– through compressed air.

NOTE 1: Extension of the scope up to 1 MHz is under consideration.

NOTE 2: Higher voltages may exist in internal circuits of the equipment.

NOTE 3: Requirements for altitudes exceeding 2,000 m can be derived from Table A.2 of Annex A.

1.1.2 The object of this basic safety standard is to guide Technical Committees responsible for different equipment in order to rationalize their requirements so that insulation coordination is achieved.

It provides the information necessary to give guidance to Technical Committees when specifying clearances in air, creepage distances and solid insulation for equipment.

Product description and labelling

Currently there is still a range of device specifications, in which the regulations on insulation coordination have still not been incorporated. In addition, transition periods of up to 5 years apply for reworked standards in order to replace the older standards. Thus, for the foreseeable future, there are products existing side by side that have been developed and labelled following the old design rules and those that have already been designed according to the regulations for insulation coordination.

For this reason, whereever possible and applicable, the rating is given in the product descriptions according to the old and new regulations. The reassessment and conversion of the labelling of existing products is carried out in the framework of the transition periods in accordance with economical considerations.

The rating is given according to the new regulation in the format

Rated voltage/Rated impulse voltage/Degree of pollution
e.g. 800 V/8 kV/3

With this data, the rated impulse voltage is given priority over the overvoltage category. Therefore it is left to the users to decide which overvoltage category to select based on the requirements. If no rated voltage is indicated, the voltage data refer to overvoltage category III and degree of pollution 3.

It is imperative that the indicated wire strip lengths are observed. When connecting the wire, care must be taken that the insulation material is fed as closely as possible to the metal clamping body, as otherwise the creepage distances and clearances might be reduced.

2.2.2.1 Impulse withstand categories (overvoltage categories)

Impulse withstand categories are means to distinguish degrees of availability of equipment with regard to required expectations on continuity of service and on an acceptable risk of failure. By selection of impulse withstand levels of equipment, insulation coordination can be achieved in the whole installation, reducing the risk of failure to an acceptable level providing a basis for overvoltage control.

A higher characteristic numeral of an impulse withstand category indicates a higher specific impulse withstand of the equipment and offers a wider choice of methods for overvoltage control.

The concept of impulse withstand categories is used for equipment energised directly from the mains. The application of impulse withstand categories is based on the requirement with regard to additional protection against overvoltages as specified in IEC 364-4-443.

Note: Overvoltages of atmospheric origin are not significantly physically attenuated downstream in most installations. Investigations have shown that the concept of a probabilistic approach has proven reasonable and useful.

2.2.2.1.1 Equipment energized directly from the low-voltage

Technical Committees shall specify the overvoltage category as based on the following general explanation of overvoltage categories (see also IEC 364-4-443):

— Equipment of **overvoltage category IV** is for use at the origin of the installation.

Note: Examples of such equipment are electricity meters and primary overcurrent protection equipment

– Equipment of **overvoltage category III** is equipment in fixed installations and for cases where the reliability and the availabilty of the equipment is subject to special requirements.

Note: Examples of such equipment are switches, in the fixed installation and equipment for industrial use with permanent connection to the fixed installation.

– Equipment of **overvoltage category II** is energy-consuming equipment to be supplied from the fixed installation.

Note: Examples of such equipment are appliances, portable tools and other household and similar loads.

If such equipment is subjected to special requirements with regard to reliability and availability, overvoltage category III applies.

– Equipment of **overvoltage category I** is equipment for connection to circuits in which measures are taken to limit transient overvoltages to an appropriately low level.

Note: Examples are protected electronic circuits.

2.5 Pollution

The micro-environment determines the effect of pollution on the insulation. The macro-environment, however, has to be taken into account when considering the micro-environment.

Means may be provided to reduce pollution at the insulation under consideration by effective use of enclosures, encapsulation or hermetic sealing. Such means to reduce pollution may not be effective when the equipment is subject to condensation or if, in normal operation, it generates pollutants itself.

Small clearances can be bridged completely by solid particles, dust and water and therefore minimum clearances are specified where pollution may be present in the micro-environment.

Note 1: Pollution will become conductive in the presence of humidity. Pollution caused by contaminated water, soot, metal or carbon dust is inherently conductive.

Note 2: Conductive pollution by ionized gases and metallic depositions occurs only in specific instances, for example in arc chambers of switchgear or controlgear, and is not covered by this part of IEC 664.

2.5.1 Degrees of pollution in the micro-environment

For the purpose of evaluating creepage distances and clearances, the following four degrees of pollution in the micro-environment are established:

- **Pollution degree 1**
  No pollution or only dry, non-conductive pollution occurs. The pollution has no influence.
- **Pollution degree 2**
  Only non-conductive pollution occurs except that occasionally a temporary conductivity caused by condensation is to be expected.
- **Pollution degree 3**
  Conductive pollution occurs or dry, non-conductive pollution occurs which becomes conductive due to condensation which is to be expected.
- **Pollution degree 4**
  The pollution generates persistent conductivity caused by conductive dust or by rain or snow.

2.5.2 Coordination with macro-environment

This sub-clause is under consideration.

2.7 Insulation material (excerpt)

The insulation material is divided into the following four groups according to their CTI (Comparative Tracking Index):

Insulation I: $600 \leq CTI$
Insulation II: $400 \leq CTI < 600$
Insulation III a: $175 \leq CTI < 400$
Insulation III b: $100 \leq CTI < 175$

The comparative tracking index must be defined according to DIN IEC 112/VDE 0303 part 1 on specimens made specially for this purpose with test solution A.

Note: The proof-tracking index (PTI) is also used to identify the tracking characteristics of materials. A material may be included in one of the four groups given above on the basis that its PTI, established by the methods of IEC 112 using solution A, is equal to or greater than the lower value specified for the group.

Derivation of the rated impulse voltage from the overvoltage category and assignment of the nominal supply voltages to the rated impulse voltages for equipment
Excerpt from table 1 (IEC 60 664-1: 1992)

Nominal supply voltage for alternating voltage systems according to IEC 38 in V		Voltages wire to ground in V derived from the nominal supply voltage up to U_{eff} and U_	Rated impulse voltage in V for overvoltage category			
3phase	1phase		I	II	III	IV
		50	330	500	800	1500
		100	500	800	1500	2500
	120-240	150	800	1500	2500	4000
230/400 277/480[1)]		300	1500	2500	4000	6000
400/690		600	2500	4000	6000	8000
1000		1000	4000	6000	8000	12000

[1)] The nominal-supply voltage 500 V is included

Dimensions of the clearances
DIN VDE 0110 part 1 section 3.1
Table 2: **Minimum clearances for the insulation coordination**

Required impulse voltage[1]	Minimum clearances in heights up to 2000 m above sea level (NZ)							
	Case A (inhomogeneous field, see 1.3.15)				Case B (homogeneous field, see 1.3.14)			
	Degree of pollution				Degree of pollution			
	1	2	3	4	1	2	3	4
kV	mm	mm	mm	mm	mm	mm	mm	mm
0.33[2]	0.01				0.01			
0.40	0.02				0.02			
0.50[2]	0.04	[3]			0.04	[3]		
0.60	0.06	0.2[4]			0.06	0.2[4]		
0.80[2]	0.10		0.8[4]		0.1			
1.0	0.15			1.6[4]	0.15		0.8[4]	
1.2	0.25	0.25			0.2			1.6[4]
1.5[2]	0.5	0.5			0.3	0.3		
2.0	1.0	1.0	1.0		0.45	0.45		
2.5[2]	1.5	1.5	1.5		0.6	0.6		
3.0	2	2	2	2	0.8	0.8		
4.0[2]	3	3	3	3	1.2	1.2	1.2	
5.0	4	4	4	4	1.5	1.5	1.5	
6.0[2]	5.5	5.5	5.5	5.5	2	2	2	2
8.0[2]	8	8	8	8	3	3	3	3
10	11	11	11	11	3.5	3.5	3.5	3.5
12[2]	14	14	14	14	4.5	4.5	4.5	4.5
15	18	18	18	18	5.5	5.5	5.5	5.5
20	25	25	25	25	8	8	8	8
25	33	33	33	33	10	10	10	10
30	40	40	40	40	12.5	12.5	12.5	12.5
40	60	60	60	60	17	17	17	17
50	75	75	75	75	22	22	22	22
60	90	90	90	90	27	27	27	27
80	130	130	130	130	35	35	35	35
100	170	170	170	170	45	45	45	45

[1] This voltage is
– for functional insulation: the highest impulse voltage to be expected on the clearance (see 3.1.4);
– for base insulation, if directly or mainly influenced by transient overvoltages of the low-voltage network (see 2.2.2.2, 2.2.2.3.1 and 3.1.5): the rated impulse voltage of the equipment;
– for other base insulation (see 2.2.2.3.2): the highest impulse voltage which may occur in the circuit
– for reinforced insulation, see 3.1.5.
[2] Preferred values, as determined in 2.1.1.2
[3] For PC board connectors, the values of pollution degree 1 apply, except for the fact that the value must not be below 0.04 mm as determined in table 4
[4] The minimum clearances for the pollution degrees 2, 3 and 4 are based on experience, not on basic knowledge

Table A.2: **Height correction factors**

Height m	Normal air pressure kPa	Multiplication factor for clearances
2 000	80.0	1.00
3 000	70.0	1.14
4 000	62.0	1.29
5 000	54.0	1.48
6 000	47.0	1.70
7 000	41.0	1.95
8 000	35.5	2.25
9 000	30.5	2.62
10 000	26.5	3.02
15 000	12.0	6.67
20 000	5.5	14.50

Nominal voltage of the low-voltage network

Table 3a: **Single phase 3 or 2 wire alternating or direct voltage systems**

Nominal voltage of the power supply system (network)*)	Voltages for table 4	
	for insulation Wire – Wire[1)]	for insulation Wire – Ground[1)]
	All systems	3 wire systems center grounded
V	V	V
12.5	12.5	–
24 25	25	–
30	32	–
42 48 50,**)	50	–
60	63	–
30–60	63	32
100,**)	100	–
110 120	125	–
150,**)	160	–
220,	250	–
110–220 120–240	250	125
300,**)	320	–
220–440	500	250
600,**)	630	–
480–960	1000	500
1000,**)	1000	–

1) Wire-ground insulation level for ungrounded or impedance-grounded networks equal those of wire-wire, as the operating voltage of each wire to ground can in practice reach wire-wire voltage. The reason is that the actual voltage to ground is determined by the insulation resistance and the capacitive blind resistance of each wire to ground. That means that a low (but permissible) insulation resistance of a wire can practically ground it and increase the other two to wire-wire voltage to ground.

*) For relation with the rated voltage see 2.2.1.

**) (see national foot note)

Table 3b: **Three-phase 4 or 3 wire alternating voltage systems**

Nominal voltage of the power supply system (network)*)	Voltage for table 4		
	for insulation Wire – Wire	for insulation Wire – Ground	
	All systems	Three-phase 4 wire systems with grounded neutral[2)]	Three-phase 3 wire systems ungrounded[1)] or grounded wire
V	V	V	V
60	63	32	63
110 120 127	125	80	125
150,**)	160	–	160
208	200	125	200
220 230 240	250	160	250
300,**)	320	–	320
380 400 415	400	250	400
440	500	250	500
480 500	500	320	500
575	630	400	630
600,**)	630	–	630
660 690	630	400	630
720 830	800	500	800
960	1000	630	1000
1000,**)	1000	–	1000

1) Wire-ground insulation level for ungrounded or impedance grounded networks equal those of wire-wire, as the operating voltage of each wire to ground can in practice reach wire-wire voltage. The reason is that the actual voltage to ground is determined by the insulation resistance and the capacitive blind resistance of each wire to ground. That means that a low (but permissible) insulation resistance of a wire can practically ground it and increase the other two to wire-wire voltage to ground.

2) For equipment which can be operated both in three-phase 4 wire and in three-phase 3 wire networks, grounded and also ungrounded, only the values for 3 wire systems are to be used.

*) For relation with the rated voltage see 2.2.0.1.

**) (see national foot note)

Dimensions of the creepage distances

DIN VDE 0110 part 1 section 3.2

Table 4: **Minimum creepage distances for equipment under long-term voltage**

Effective voltage value [1]	Creepage distances											
	Printed circuits		Degree of pollution									
	Pollution degree		1	2			3			4		
	1	2		Insulation material			Insulation material			Insulation material		
	[2]	[3]	[2]	I	II	III	I	II	III[4]	I	II	III[4]
V	mm	mm	mm	mm	mm	mm	mm	mm	mm	mm	mm	mm
10	0.025	0.04	0.08	0.4	0.4	0.4	1	1	1	1.6	1.6	1.6
12.5	0.025	0.04	0.09	0.42	0.42	0.42	1.05	1.05	1.05	1.6	1.6	1.6
16	0.025	0.04	0.1	0.45	0.45	0.45	1.1	1.1	1.1	1.6	1.6	1.6
20	0.025	0.04	0.11	0.48	0.48	0.48	1.2	1.2	1.2	1.6	1.6	1.6
25	0.025	0.04	0.125	0.5	0.5	0.5	1.25	1.25	1.25	1.7	1.7	1.7
32	0.025	0.04	0.14	0.53	0.53	0.53	1.3	1.3	1.3	1.8	1.8	1.8
40	0.025	0.04	0.16	0.56	0.8	1.1	1.4	1.6	1.8	1.9	2.4	3
50	0.025	0.04	0.18	0.6	0.85	1.2	1.5	1.7	1.9	2	2.5	3.2
63	0.04	0.063	0.2	0.63	0.9	1.25	1.6	1.8	2	2.1	2.6	3.4
80	0.063	0.1	0.22	0.67	0.95	1.3	1.7	1.9	2.1	2.2	2.8	3.6
100	0.1	0.16	0.25	0.71	1	1.4	1.8	2	2.2	2.4	3	3.8
125	0.16	0.25	0.28	0.75	1.05	1.5	1.9	2.1	2.4	2.5	3.2	4
160	0.25	0.4	0.32	0.8	1.1	1.6	2	2.2	2.5	3.2	4	5
200	0.4	0.63	0.42	1	1.4	2	2.5	2.8	3.2	4	5	6.3
250	0.56	1	0.56	1.25	1.8	2.5	3.2	3.6	4	5	6.3	8
320	0.75	1.6	0.75	1.6	2.2	3.2	4	4.5	5	6.3	8	10
400	1	2	1	2	2.8	4	5	5.6	6.3	8	10	12.5
500	1.3	2.5	1.3	2.5	3.6	5	6.3	7.1	8	10	12.5	16
630	1.8	3.2	1.8	3.2	4.5	6.3	8	9	10	12.5	16	20
800	2.4	4	2.4	4	5.6	8	10	11	12.5	16	20	25
1 000	3.2	5	3.2	5	7.1	10	12.5	14	16	20	25	32
1 250			4.2	6.3	9	12.5	16	18	20	25	32	40
1 600			5.6	8	11	16	20	22	25	32	40	50
2 000			7.5	10	14	20	25	28	32	40	50	63
2 500			10	12.5	18	25	32	36	40	50	63	80
3 200			12.5	16	22	32	40	45	50	63	80	100
4 000			16	20	28	40	50	56	63	80	100	125
5 000			20	25	36	50	63	71	80	100	125	160
6 300			25	32	45	63	80	90	100	125	160	200
8 000			32	40	56	80	100	110	125	160	200	250
10 000			40	50	71	100	125	140	160	200	250	320

[1] This voltage is
- for functional insulation: the operating voltage
- for base and additional insulation of a power circuit directly supplied by the low-voltage network (see 2.2.1.1.1): the voltage selected from table 3a or 3b based on the rated voltage of the equipment, or the rated insulation voltage
- for base and additional insulation of systems, equipment and internal circuits, which are not directly supplied by the low-voltage network (see 2.2.1.1.2): the highest effective voltage value, which may occur among the ratings in the network, equipment or internal circuit under rated voltage supply and under unfavorable combination of the operating conditions

[2] Insulation material groups I, II, IIIa and IIIb

[3] Insulation material groups I, II and IIIa

[4] Insulation material group IIIb is not recommended for pollution degree 3 at voltages above 630 V and also not for pollution degree 4.

Note: In agreement with VDE 0110 for rated voltages
127, 208, 415, 660/690, 830 volt creepage distances must be rated according to the lower values of
125, 200, 400, 630, 800 Volts.

Creepage distances and clearances according to DIN VDE 0110 b/02.79

Reference voltage (table 1) up to		Insulation group A_o		Insulation group A		Insulation group B			Insulation group C			Insulation group D		
Alternating voltage (effective values) V	Direct voltage V	Clearance L mm	Creepage distance mm	Clearance L mm	Creepage distance mm	Clearance L mm	Creepage distance a mm	b mm	Clearance L mm	Creepage distance a mm	b mm	Clearance L mm	Creepage distance a mm	b mm
12	15	0.06	0.1	0.15	0.2	0.4	0.6	0.8	0.8	1.2	1.7	1.6	2.3	3.2
30	36	0.1	0.15	0.2	0.25	0.5	0.8	1	1	1.5	2	1.8	2.6	3.5
60	75	0.15	0.2	0.25	0.35	0.7	1	1.3	1.2	1.7	2.3	2	3	4
125	150	0.25	0.35	0.4	0.5	1	1.3	2	1.6	2.2	3	2.5	3.5	5
250	300	0.5	0.7	0.8	1	1.6	2	3	2.5	3	4	3.5	5	7.5
380	450	0.8	1.1	1.2	1.5	2.4	3	4	3.5	4.5	6	5	7	10
500	600	1.1	1.5	1.6	2	3	4	5.5	4.5	6	8	6.5	9	13
660	800	1.5	2	2.2	2.8	4	5.5	7	6	8	10.5	8	12	17
750	900	1.8	2.2	2.5	3.2	4.5	6	8	6.5	9	12	9	13	19
1000	1200	2.5	3	3.5	4.5	6	8	11	9	12	16	12	17	25
1500	1800	4	5	5.5	7	9	12	17	13	18	24	17	25	36
2000	2400	5.5[1]	7	7.5[1]	9.5	12	16	23	17	24	30	22	33	47
3000	3600	9[1]	11	12[1]	15	18[1]	25	36	26[1]	36	45	32[1]	48	70
6000	7200	20[1]	25	26[1]	32	36[1]	50	70	50[1]	70	90	60[1]	90	125
10000	12000	35[1]	45	45[1]	55	60[1]	90	120	80[1]	120	160	100[1]	150	200

[1] To prevent continuous glow at operating voltage (reference voltage) sharp-edged metal components should be avoided.
(W. Hermstein: Measuring clearances, especially for 50 Hz alternating voltage.
etz-a 90 (1969) 11, pages 251 to 255, 9B., 11 Qu

Insulation group A_O: Lower-power equipment in air-conditioned or clean and dry rooms that is suitably protected and heats up minimally when short circuits occur

Insulation group A: Electrical equipment in air-conditioned or clean and dry rooms that is suitably protected

Insulation group B: Electrical equipment in households, stores and other commercial premises, in precision engineering workshops, laboratories, testing stations, in rooms for medical use etc.

Insulation group C: Electrical equipment used primarily in premises for industrial, commercial and agricultural use, in unheated warehouses, in workshops, in boiler rooms, machine tools etc.

Insulation group D: Electrical equipment for use in motor vehicles that are particularly subject to the effects of conductive brake dust and moisture (condensation water or snow) and cannot be sufficiently protected by casing.

Division of creepage distances

Table 3: **Resistance to creepage**

1	2	3	4
Group	Resistance to creepage[1] (minimum value)	Creepage distance without ripple	Creepage distance with ripple accord. to § 8a)
I	(minimum value) KB 100	b	$\frac{a + b}{2}$
II	(minimum value) KB 380	$\frac{a + b}{2}$	a
III	KB > 600	a	a

[1] Steps of creepage resistance according to DIN 53 480, VDE 0303 part 1

Note:
The voltages given acoording to DIN VDE 0110 b/02.79 refer, unless otherwise identified, to insulation group C.

facts

Degrees of protection according to DIN EN 60 529/ VDE 0470 part 1: 2000 – 09

Connecting devices such as modular terminals, connecting terminals, printed circuit board terminals and plug-in connectors etc., intended for mounting devices and installation that have no shock-protection housing in the sense of this standard. No IP protection category can thus be assigned to it. The insulating component is used in the first place for functional insulation, but can in addition offer protection against direct contact of active components e.g. safety finger contact and/or touch by the back of the hand. Its surface is not regarded as exposed. The definitive shock protection is secured by installation measures and by the external protective covering of the end device of the installation.

Identification examples using the IP code

Explanation of Alpha-numeric IP code system

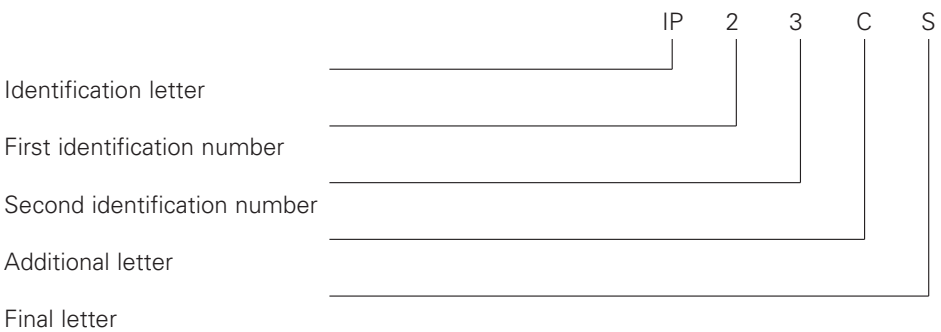

A housing using this identification (IP code)

2 – protects people against access to dangerous components (touch-safe)
– protects the equipment within the housing against ingress of solid foreign bodies with a diameter of 12.5 mm and larger

3 – protects the equipment within the housing against damaging effects of water that is sprayed from every direction against the housing

C – protects people who are handling tools with a diameter of 2.5 mm and larger, and a length less than 100 mm, against access to dangerous components (the tool can be inserted into the housing at full length)

S – is tested to provide protection against damaging effects of water ingress, while all components of the equipment are in standstill position

Components of the IP code and its meaning

A short description of the IP code components is given in the following table:

Component	Figures or letter	Meaning for the protection of the equipment	Meaning for the protection of people:
Identification letter	IP	–	–
First identification number		against ingress of solid foreign bodies	against access to dangerous components with
	0	(unprotected)	(unprotected)
	1	≥ 50 mm diameter	back of hand
	2	≥ 12.5 mm diameter	finger
	3	≥ 2.5 mm diameter	tool
	4	≥ 1.0 mm diameter	wire
	5	protected against dust	wire
	6	dustproof	wire
Second identification number		against ingress of water with damaging effects	
	0	(unprotected)	
	1	dripping water falling vertically	
	2	dripping water (15° slope)	
	3	spraying water	
	4	splashing water	
	5	jet water	
	6	powerful jet water	
	7	temporary submersion	
	8	continuous submersion	

Table 1: **Degrees of protection against access to dangerous components, identified by the first identification number**

First identification number	Degree of protection: Brief description	Degree of protection: Definition
0	unprotected	–
1	protected against access to dangerous components with the back of the hand	The access probe, 50 mm diameter sphere, must be a sufficient distance away from the dangerous components
2	protected against access to dangerous components with a finger	The jointed test finger, 12 mm in diameter, 80 mm in length, must be a sufficient distance away from the dangerous components
3	protected against access to dangerous components with a tool	The access probe with a diameter of 2.5 mm must not penetrate
4	protected against access to dangerous components with a wire	The access probe with a diameter of 1.0 mm must not penetrate
5	protected against access to dangerous components with a wire	The access probe with a diameter of 1.0 mm must not penetrate
6	protected against access to dangerous components with a wire	The access probe with a diameter of 1.0 mm must not penetrate

Note: For the first identification numbers 3, 4, 5 and 6 protection against access to dangerous components is provided if a sufficient distance is maintained. Due to the simultaneously applicable requirement according to table 2, the definition "must not penetrate" was given in table 1.

Table 2: **Degrees of protection against solid foreign bodies**

First identification number	Degree of protection	
	Brief description	Definition
0	unprotected	–
1	protected against solid foreign bodies of 50 mm and larger	Full penetration of spheres of 50 mm diameters or allowed*)
2	protected against solid foreign bodies of 12.5 mm and larger	Full penetration of spheres of 12.5 mm diameters or allowed*)
3	protected against solid foreign bodies of 2.5 mm and larger	Full penetration of 2.5 mm diameter sphere is not allowed at all*)
4	protected against solid foreign bodies of 1.0 mm and larger	Full penetration of 1.0 mm diameter sphere is not allowed at all*)
5	protected against dust	Penetration of dust is not fully prevented, but dust must not penetrate to such an extent that the satisfactory functioning of the device or safety is restricted in any way
6	protected against dust	No penetration of dust

*) **Note:** The full diameter of the object probe must not go through any opening in the housing

Table 4: **Degrees of protection against access to dangerous components, identified by the additional letter**

First identification number	Degree of protection		Test conditions see section
	Brief description	Definition	
A	protected against touch with the back of hand	The access probe, 50 mm diameter sphere, must be at a sufficient distance away from dangerous components	15.2
B	protected against touch with the finger	The jointed test finger, 12 mm in diameter, 80 mm in length, sufficient distance away from dangerous components	15.2
C	protected against access with a tool	The access probe with a diameter of 2.5 mm and a length of 100 mm must be a sufficient distance away from dangerous components	15.2
D	protected against access with a wire	The access probe with a diameter of 1.0 mm and a length of 100 mm must be a sufficient distance away from dangerous components	15.2

Table 3: **Degree of protection against water, identified by the second identification number**

Second identification number	Degree of protection	
	Brief description	Definition
0	unprotected	–
1	protected against dripping water	Dripping water falling vertically must not have a damaging effect
2	protected against dripping water if the housing is sloped up to 15°	Dripping water falling vertically must not have a damaging effect if the housing is sloped by an angle of up to 15° both sides of the vertical
3	protected against spraying water	Water that is sprayed at an angle of 60° both sides of the vertical must not have any damaging effect
4	protected against splashing water	Water that is sprayed from all directions against the housing must not have any damaging effect
5	protected against jet water	Water that is directed from all directions as a jet against the housing must not have any damaging effect
6	protected against powerful jet water	Water that is directed from all directions as a powerful jet against the housing must not have any damaging effect
7	protected against the effects of temporary immersion in water	Water must not penetrate in a quantity to cause damage if the housing is immersed temporarily in water under standard pressure and time conditions
8	protected against the effects of continuous immersion in water	Water must not penetrate in a quantity to cause damage if the housing is continuously immersed in water conditions that must be arranged between the manufacturer and the user. The conditions must however be more severe than for identification number 7.

Degree of protection against water, identified by the second identification number
The second identification number gives the protection category through housing in light of damaging influences on the electrical equipment following penetration of water.

Table 3 gives short descriptions and definitions for the degrees of protection that are represented by the second identification number .

Degrees of protection that are given in this table may only be determined by the second identification number and not by reference to the short description or definition. Until the second identification number 6, the designation means that the requirements for all the lower identification numbers have been fulfilled.

A housing that is identified only with the second identification number 7 or 8 is considered unsuitable for stress through jet water (identified with the second identification number 5 or 6) and does not need to meet the requirements of number 5 or 6. It should be provided with a double identification according to the following table:

The housing complies with the test for			
jet water, second identification number	temporary/continuous immersion, second identification number	Identification and label	Field of application
5	7	IPX5 / IPX7	varied
6	7	IPX6 / IPX7	varied
5	8	IPX5 / IPX8	varied
6	8	IPX6 / IPX8	varied
	7	IPX7	limited
	8	IPX8	limited

Housings for “varied” use, as indicated in the last column, must meet the requirements both for exposure to jet water and temporary or continuous immersion in water.

Housings for “limited” use, as indicated in the last column, are only regarded as suitable for temporary or continuous immersion and as unsuitable for exposure to jet water.

Modular terminals for installations with explosion hazard (Ex terminals) Protection category "Increased safety Eex e"

Ex terminals are modular terminals that have been tested and certified by a European Ex test institute in accordance with

DIN EN 50 014 – VDE 0171 part 1
"General requirements" and

DIN EN 50 019 – VDE 0170/0171 part 6
"Protection category: Increased safety 'e' "

The protection category "Increased safety EEx e" applies to electrical equipment that resists sparks, electric arcing or hazardous surface temperatures during operation. Modular terminals thus fall into temperature category T6, in which electrical equipment at an ambient temperature of 40°C and being operated in compliance with regulations, does not exceed the maximum temperature (surface temperature) of 85°C. Certified test institutes are e.g. the Physikalisch Technische Bundesanstalt PTB in Germany, the Laboratoire Central des Industries Electrique LCIE in France, the Health and Safety Executive BASEEFA in England, the EX-Labor of ASEV in Switzerland amongst others.

However, for modular terminals used as incomplete electrical equipment, only a partial certification is issued. This certificate is the basis for the final inspection and certification of the complete installation before it is commissioned by an expert.

The certificate (partial certification) includes a description of the modular terminals, in which special requirements regarding the preparation of terminal strips are made e.g. installing separating end cover plates when modular terminals are connected in series.

Test Certificate

Certificates from LCIE and ASEV are available for feed through terminals of the WK... range and protective conductor terminals of the WK...SL.. range, if indicated. The certificates identify the relevant nominal data and include the accessories listed in the description. The areas of application are divided into:

Group I: Electrical equipment for mines with firedamp hazard
Group II: Electrical equipment for areas with explosion hazard except for mines with firedamp hazard (e.g. installations with explosion hazard for the chemical and petrochemical industries)

In accordance with a resolution of the DKE, Deutsche Elektrotechnische Kommission, terminals are also accepted as electrical equipment for Group I (firedamp protection Eex e I) for which only the increased safety protection type 'e' for Group II (explosion protection Eex e II) has been certified and vice versa.

Modular terminals with Ex protection are identified with the label EEx e I/II or EEx e II and with the approval number. The complete test certification with a description is available upon request.

Protection category "Intrinsic safety Eex i"

According to the installation specification DIN VDE 0165, electrical equipment installed in areas with explosion hazard of group II, zone I (chemical and petrochemical industries) are excluded from the type test and obligatory marking, if they do not contain any voltage source and correspond to DIN EN 50020-VDE 0170/0171 part 7. This applies in particular to feed through terminals in the standard version, as DIN EN 50020 does not make any special demands on connector terminals of the protection category Eex i.

It has been generally accepted that feed through terminals in intrinsically safe circuits are clearly marked with the blue coloring of the insulated housing. For intrinsically safe circuits, feed through terminals can be used in the standard version and if required available with blue insulating housing.

EEx approvals according to the ATEX guideline – 94/9/EG

(ATEX = Atmospheres Explosibles) are currently being prepared.
This guideline aims at clarifying the procedures and applications of devices, components and protective systems to make them suitable for use in explosion hazard areas. Their proper use shall then help to eliminate the barriers and difficulties that occur in the free exchange of goods within the European Community.
The transition period between EEx approvals and the ATEX guideline will last until June 30, 2003.

DIN VDE 0106 part 100: 1983 – 03
Protection against electrical shock. Layout of operating devices near live components

The standard cited in the **Accident Prevention Regulation VBG 4** is seen as the basis for the layout of electrical equipment up to 1000 V ~ (1500 V ⎓) as regards protection against direct contact,where operating devices are arranged near live components that are operated by at least electrotechnically instructed persons (occasional handling).

A protected zone is established for this purpose which must be reached into on "occasional handling" of the operating device (switch, push button, rotary button). A distance of

– 30 mm around the operating device "safety from finger touch" and
– 100 mm around the operating device "safety from touch by the back of the hand"

is designed and required.

The VBG 4 regulation is directed at the installer or user of electrical installations who must plan, build and finally operate the installation in accordance with accident prevention regulations. The installer has the task of selecting electrical equipment with the objective and if necessary making it safe to touch using accessories. Only he can confirm that his installation conforms to the accident prevention regulation VBG4.

Wieland develops, builds and tests its products according to the relevant equipment and safety regulations that are likewise cited in regulation VBG4 and moreover offers a range of accessories that takes this requirement into account.

Standards and specifications

facts & DATA

Range of standards DIN VDE 0100
Installation of power systems and equipment with nominal voltages up to 1,000 V

This VDE regulation is a regulation for installations but also contains important details for the manufacturer of equipment and components such as permissible loads for cables, the use of protective conductor terminals and neutral conductor isolating terminals.

DIN EN 50 110-1/VDE 0105 part 1: 10.97
Operation of power systems and equipment

DIN VDE 0106-100/VDE 0106 part 100: 03.83
Protection against electric shock;
Actuating members positioned close to parts liable to shock (VDE Specifications)

DIN VDE 0106-101/VDE 0106 part 101: 11.86
Protection against electric shock;
Basis requirements for protective separation in electrical equipment

DIN VDE 0108-1/VDE 0108 part 1: 10.89
Power systems and safety power supply in building installations for groups of people; general

DIN VDE 0110/11.72 und
DIN VDE 0110 b/02.79 **withdrawn!**
Insulation coordination for electrical equipment in low-voltage installations
- Measurement of creepage distances and clearances

DIN VDE 0110-1/VDE 0110 part 1: 04.97
(IEC 60 664-1: 1992, modified)
HD 625.1 S1: 1996
– Basic principles, requirements and tests

DIN EN 60 204 1/VDE 0113 part 1: 11.98
(IEC 60 204-1: 1992, modified)
Electrical equipping of machines; part 1: general requirements

DIN EN 50 178/VDE 0160: 04.98
Equipping of power installations with electronic equipment

DIN VDE 0165: 02.91
Installation of electrical systems and equipment in areas with explosion hazard

DIN EN 60 079-14/VDE 0165 part 1: 08.98

EN 50 014: 1992/DIN VDE 0170/0171 part 1: 03.94 withdrawn
Electrical equipment for areas with explosion hazard; general specifications

DIN EN 50014/VDE 0170/0171 part 1: 02.00

DIN EN 50 019: VDE 0170/0171 part 6: 03.96
Electrical equipment for areas with explosion hazard; increased safety "e"

DIN EN 50 020: VDE 0170/0171 part 7: 04.96
Electrical equipment for areas with explosion hazard; intrinsic safety "i"

DIN EN 60 529: VDE 0470 part 1: 09.00
(IEC 60 529: 1989, +A: 1999)
Protection categories by housing (IP code)

DIN VDE 0606: 02.76 and
DIN VDE 0606 b: 02.80 **withdrawn***
VDE specification for connecting devices up to 750 V
Installation consumer units and meter mounting boards up to 250 V

DIN VDE 0606 part 1: 11.84 withdrawn*
Connecting devices up to 660 V; installation boxes for taking up devices and/or connecting terminals

DIN VDE 0609 part 1: 06.83 partly replaced by DIN EN 60999-1/VDE 0609 part 1: 12.00
Connecting points for screw terminals for connecting or linking copper conductors up to 240 mm^2;
general definitions

DIN EN 60 999: VDE 0609 part 1: 12.00
(IEC 60 999: 1999)
Connecting devices, safety requirements for screw terminal connections and screwless terminal connections for electrical copper conductors

DIN EN 60 947-7-1: VDE 0611 part 1: 05.00
(IEC 60 947-7-1: 1989)
Low-voltage switching devices
Part 7: Auxiliary equipment
Main section 1 – modular terminals for copper conductors

DIN EN 60 947-7-2: VDE 0611 part 3: 06.96
(IEC 60 947-7-2: 1995)
Low-voltage switching devices
Part 7: Auxiliary devices
Main section 2 – ground conductor terminals for copper conductors

DIN VDE 0611 part 3: 11.89 withdrawn, replaced by DIN EN 60 947-7-2/VDE 0611 part 3: 06.96
(transition period until 01.07.2001)
Modular terminals for connecting or linking copper conductors, protective conductive modular terminals up to 120 mm^2

DIN VDE 0611-4/VDE 0611 part 4: 02.91
Modular terminals for connecting or linking copper conductors;
multi-tier distribution board for modular terminals up to 6 mm^2

E DIN VDE 0611-6/VDE 0611 part 6: 05.95
Modular terminals for copper conductors
Safety requirements for modular terminals for taking up fuse units

DIN VDE 0611-20/VDE 0611 part 20: 12.87
Modular terminal blocks for connection of copper conductors up to 1000 V a.c. and up to 1200 V d.c.;
test for flammability and flame propagation

DIN EN 60 998-1/VDE 0613-1: 04.94
(IEC 60 998-1: 1990, modified)
Connecting devices for low-voltage circuits for household and similar use
Part 1: General requirements

DIN EN 60 998-2-1/VDE 0613 part 2-1: 04.94
(IEC 60 998-2-1: 1990, modified)
Connecting devices for low-voltage circuits for household and similar use
Part 2-1: Special requirements for connecting devices as separate equipment and screw terminals

DIN EN 60 998-2-2/VDE 0613 part 2-2: 08.94
(IEC 60 998-2-2: 1991)
Connecting devices for low-voltage circuits for household and similar use
Part 2-2: Special requirements for connecting devices as separate equipment and screwless terminals

***replaced by DIN VDE 0606-1/VDE 0606 part 1: 10.00**
connecting devices up to 690 V – installation boxes for taking up devices and/or connecting terminals

DIN EN 60 998-2-3/VDE 0613 part 2-3: 09.94
(IEC 60 998-2-3: 1991)
Connecting devices for low-voltage circuits for household and similar use
Part 2-3 : Special requirements for connecting devices as separate equipment and IDC terminals

DIN EN 61 210/VDE 0613 part 6: 09.95
(IEC 61 210: 1993 modified)
Connecting devices
Flat push-on connection for electrical copper conductors; safety requirements

DIN EN 50 262/VDE 0619: 04.99
Metric cable glands for electrical installations; German version EN 50262: 1998

DIN EN 60 320-1/VDE 0625 part 1: 07.97
(IEC 60 320-1: 1994, modified + A1: 1995)
Appliance couplers for household and and similar general use

DIN EN 60 320-1 A2/VDE 0625 part 1 A2: 10.98
(IEC 60 320-1: 1994/A2: 1996)
Modification no. 2

DIN EN 60 320-2-2/VDE 0625 part 2-2: 09.99
(IEC 60 320-2-2: 1990, modified)
Appliance couplers for household and and similar general use
Part 2: Remote connections for devices for household use and similar installations

DIN EN 60 799/VDE 0626: 06.99
(IEC 60 799: 1998)
Electrical accessories – Cord sets and interconnection cord sets (IEC 60 799: 1998);
German version EN 60 799: 1998

DIN VDE 0627 : 06.86
Plug-in connectors and plug and socket devices with rated voltages up to AC 1000 V,
up to DC 1200 V and rated currents up to 500 A per contact

DIN VDE 0628: 11.84
Plug-in connectors for nominal voltages up to AC 380 V with nominal current of 16 A

DIN IEC 23/221/CD/VDE 0606 part 1535: 07.96
Separable connecting devices intended for permanent connection – Part. 1 : General requirements;
IEC 23/221/CD: 1996

DIN EN 60 947-1/VDE 0660 part 100: 12.99
(IEC 60 947-1: 1996, modified + Corrigendum March 1998)
Low-voltage switching devices
Part 1: General definitions

DIN EN 60 439-1/VDE 0660 part 500: 08.00
(IEC 60 439-1: 1999)
Low- voltage switchgear and controlgear assemblies – Part 1:
Type-tested and partially type-tested assemblies

DIN EN 60 439-3/VDE 0660 part 504: 04.92
(IEC 60 439-3: 1990, modified)
Switching devices; low-voltage switchgear assembly;
Part 3: Special requirements of low-voltage switchgear assembly that laymen have access to operate,
– Distribution boards –

DIN EN 60 335-1/VDE 0700 part 1: 10.95
(IEC 60 335-1: 1991, modified)
Safety of electrical devices for household and similar use;
Part 1: General requirements

EN 60 335-1 A2: 1988, A5: 1989, A6: 1989 and A51: 1991/DIN VDE 0700 part 1 A6: 12.91
Safety of electrical devices for household and similar use
Part 1: General requirements (modifications)

DIN EN 60 598-1/VDE 0711 part 1: 08.98
(IEC 60 598-1: 1996, modified)
Luminaires
Part 1: General requirements and tests

DIN EN 60 127-2/VDE 0820 part 2: 08.96
(IEC 60 127-2: 1989 + A1: 1995 + A2: 2000)
Miniature fuses Part 2: Cartridge fuse-links German version EN 60 127-2: 1989 + A1: 1995 + A2: 2000

DIN EN 60 127-6/VDE 0820 part 6: 12.96
(IEC 60 127-6: 1994 + A1996)
VDE specification for fuses (G fuses)
Specification for G fuse holder

EN 60 715: 2001/DIN EN 60 715: 09.2001
Dimensions of low-voltage switchgear and controlgear
Standardized mounting on rails for mechanical support of electrical devices in switchgear and controlgear installations
(IEC 60 715: 1981 + A1: 1995); German version EN 60 715: 2001

IEC 60 038: 1983/DIN IEC 38: 05.87
and supplement 1 to DIN IEC 38/12.92
IEC standard voltages
At the end of 1993, the international standard IEC 38 „IEC standard voltages“ was agreed.
In the framework of this standard it was not possible to standardize worldwide the applicable voltage values 220/380 V, 230/400 V and 240/415 V for 50 Hz low-voltage supply networks.

The supply nominal voltage should according to this standard not exceed the values 230/400 V + 6 %/–10 % during the transition period up to the year 2003.

Through these defined tolerances for the optional voltage of the networks, it is possible that 220/380 V rated electrical equipment, as indicated in DIN IEC 38, can be used safely until the end of their service life.

All the considerations indicated above should be used at the existing value of 380/660 V in light of the new value of 400/690 V.

Therefore, products that are tested, documented and labelled for 220/380 V have unlimited use in devices and installations for 230/400 V supply voltage until the end of the transition period.

DIN IEC 512 part 3: 05.94
Measurement and test procedures for electrical and mechanical components
Test 5b: Current carrying capacity (Derating curve)

DIN 43 652 part 1-3: 12.85 withdrawn
High-density connectors; square design

replaced by
DIN EN 175 301-801: 09.00
Detail Specification: High density rectangular connectors, round removable crimp contacts;
(German version EN 175 301-801: 1999)

Standards and specifications for electronic components

facts & DATA

The indicated standards and regulations are considered for the development and manufacturing of our products, as applicable.
The installation instructions are also to be followed when installing our products in devices and systems.

New nominal supply voltages 30/400 V worldwide

Since the publication of standard IEC 38 in 1983, 230/400 V has replaced 220/380 V as international value for public low-voltage networks.
The supply nominal voltage should according to this standard not exceed the values 230/400 V + 6 %/–10 %, i.e. the range between 244 V and 207 V, during the transition period up to the year 2003.

Through these defined tolerances for the optional voltage of the networks, it is possible that 220/380 V rated electrical equipment, as indicated in DIN IEC 38, can be used safely until the end of their service life.

All the considerations indicated above should be used at the existing value of 380/660 V in light of the new value of 400/690 V.

DIN VDE 0106-100/VDE 0106 part 100: 03.83
(DIN 57106-100)
Protection of electric shock;
Actuating members positioned close to parts liable to shock (VDE Specification)

DIN VDE 0106-101/ VDE 106 part 101: 11.86
Protection against electric shock;
basic requirements for protective separation

DIN EN 50 178/VDE 0160/: 04.98
Equipping of power installations with electronic equipment

EN 50 005: 1976/DIN EN 50 005: 1977-07
Low voltage switchgear and controlgear for industrial use;
Terminal marking; General rules

IEC 60 038: 1983/DIN IEC 60 038: 1987-05
(DIN 40 002)
IEC standard voltages

IEC 60 127-2: 1989/EN 60 127-2: 1991/
DIN EN 60 127-2 1996-08
Miniature fuses; part 2: cartridge fuse-links

IEC 60 255/DIN VDE 0435
(1999-01)
Electrical relays; terms and definitions

DIN EN 60529 /VDE 0470 part 1: 09.00
(IEC 61529: 1989)
Protection categories by housing (IP code)

IEC 60 742: 1983 + A1/EN 60 742: 1995/
DIN EN 60 742/VDE 0551: 1995-09
Isolating transformers and safety isolating transformers – Requirements

DIN EN 60 068-2-1: 1995-03 Environmental testing
EN 600 68-2-1: 1985-08
IEC 600 68-2-1: 1990-04
Part 2: Tests; Tests A: Cold

DIN EN 60 068-2-2: 1994-08 Basic environmental testing procedures
EN 600 68-2-2: 1993-0
IEC 600 68-2-2
Part 2: Tests – Tests B: Dry heat

DIN EN 60 068-2-6: 1996-05 Environmental testing
EN 600 68-2-6: 1995-04/IEC 600 68-2-6: 1995-03
Part 2: Tests, Test Fc: Vibration (sinusoidal) (IEC 68-2-6: 1995 + Corrigendum 1995)
German version EN 60 068-2-6: 1995

DIN EN 60 068-2-32: 1995-03 Basic environmental testing procedures –
EN 600 68-2-32: 1993-04/IEC 600 68-2-32
Part 2: Tests; Test Ed: Free fall (IEC 68-2-32: 1975 + A1: 1982 + A2: 1990); German version EN 60 068-2-32: 1993

DIN EN 61 131-2/EN 61 131-2/
VDE 0411 part 500: 1995-05/IEC 61 131-2: 1992
Programmable controllers – Part 2: Equipment requirements and tests (IEC 61 131-2: 1992); German version EN 61 131-2: 1994 + A11: 1996 + A12: 2000 + Corrigendum to EN 61 131-2: 1994 and its amendment A11: 1996

DIN EN 50 090-2-2/EN 50 090-2-2: 1996-06
VDE 0829 part 2-2: 1997-06
Home and building electronic systems (HBES) – Part 2-2: System overview – General technical requirements

DIN EN 50 170/2: 1997-07
EN 50 170: 1996-12
General purpose field communication system

EN 61 000-6-3 (2001-12) DIN EN 61 000-6-3/VDE 0839 part 6-3 (2001-12)
Electromagnetic compatibility (EMC) – Part 6-3: Generic standards; Emission standard for residential, commercial and light-industrial environments (IEC 61 000-6-3: 1996, modified)

EN 61 000-6-4 (2001-10) DIN EN 61 000-6-4/VDE 0839 part 6-4 (2001-12)
Electromagnetic compatibility (EMC) – Part 6-4: Generic standards; Emission standard for industrial environments, (IEC 61 000-6-4: 1997, modified); German version

EN 61 000-6-1 (2001-10) DIN EN 50 082-1/VDE 0839 part 82-1: 1997-11
Electromagnetic compatibility – Generic immunity standard – Part 1: Residential, commercial and light industry

IEC 61 000-6-2; 1999-01/EN 61 000-6-2 (2001-10)/DIN EN 61 000-6-2/
VDE 0839 part 6-2 (2001-12)
Electromagnetic compatibility (EMC) –
Part 6-2: Generic standards – Immunity for industrial environments (IEC 61 000-6-2: 1999)

IEC 61 000-4-2: 1995-01/EN 61 000-4-2: 1995-03/DIN EN 61 000-4-2/
VDE 0847 part 4-2: 2001-12
Electromagnetc compatibility (EMC) – Part 4: Testing and measuring techniques – Section 2: Electrostatic discharge immunity test, Basic EMC Publication (IEC 1000-4-2: 1995); German version EN 61 000-4-2: 1995

IEC 61 000-4-3: 1995/EN 61 000-4-3: 1996/DIN EN 61 000-4-3/
VDE 0847 part 4-3: 2001-12
Electromagnetic compatibility (EMC) – Part 4: Testing and measuring techniques –
Section 3: Radiated, radio-frequency electromagnetic field immunity test (IEC 1000-4-3: 1995, modified);
German version EN 61 000-4-3: 1996

IEC 61 000-4-4: 1995-01/EN 61 000-4-4: 1995-03/DIN EN 61 000-4-4/
VDE 0847 part 4-4: 2001-12
Electromagnetic compatibility (EMC) – Part 4: Testing and measuring techniques –
Section 4: Electrical test transient/burst immunity test, Basic EMC Publication (IEC 1000-4-4: 1995);
German version EN 61 000-4-4: 1995

IEC 61 000-4-5: 1995-02/EN 61 000-4-5: 1995-03/DIN EN 61 000-4-5/
VDE 0847 part 4-5: 2001-12
Electromagnetic compatibility (EMC) – Part 4: Testing and measurement techniques –
Section 5: Surge immunity test (IEC 1000-4-5: 1995);
German version EN 61 000-4-5: 1995

IEC 61 000-4-6 1996-03; EN 61 000-4-6 1996-07;
DIN EN 61 000-4-6/VDE 0847 part 4-6 2001-12
Electromagnetic compatibility (EMC) – Part 4: Testing and measuring techniques –
Section 6: Immunity to conducted disturbances, induced by radio-frequency fields (IEC 1000-4-6: 1996);
German version EN 61 000-4-6: 1996

IEC 61 000-4-11 (1994) EN 61 000-4-11 (1994-08)
DIN EN 61 000-4-11/VDE 0847 part 4-11
Electromagnetic compatibility (EMC) – Part 4: Testing and measuring techniques –
Section 11: Voltages dips, short interruptions and voltages variations immunity tests (IEC 1000-4-11: 1994);
German version EN 61 000-4-11: 1994

IEC 61 000-4-15 (1997-11) EN 61 000-4-15 (1998-04)
DIN EN 61 000-4-15/VDE 0847 part 4-15 (1998-11)
Electromagnetic compatibility (EMC) – Part 4: Testing and measurement techniques –
Section 15: Flickermeter – Functional and design specifications

IEC 61 000-3-3 (1994-12) EN 61 000-3-3 (1995-01)
DIN EN 61 000-3-3/VDE 0838 part 3 (1996-03)
Electromagnetic compatibility (EMC) – Part 3: Limits; section 3: Limitation of voltage fluctuations and flicker in low-voltage supply systems for equipment with rated current < kleiner ≥ 16 A

IEC 61 000-3-2 (2000-08) EN 61 000-3-2 (1995-04)
DIN EN 61 000-3-2/VDE 0838 part 2 (1998-10)
Electromagnetic compatibility (EMC) – Part 3-2: Limits; Limits for harmonic current emissions
(equipment input current < kleiner ≥ 16 A per phase)

EN 50 081-1 1992-01-00
DIN EN 50 081/VDE 0839 part 81-1 1993-03-00
Electromagnetic compatibility; generic emission standard; part 1: residential, commercial and light industry

DIN EN 55 011/VDE 0875 part 11: 2000-05
EN 55 011: 1998-03

IEC 60 255/DIN VDE 0435 (1999-01-00)
VDE 0551 = DIN EN 60742 (1995-09)

DIN EN 55 011/VDE 0875 part 11: 2000-05-00
Industrial, scientific and medical (ISM) radio-frequency equipment – Radio disturbance characteristics –
Limits and methods of measurement (IEC/CISPR 11: 1997, modified + A1: 1999);
German version EN 55 011: 1998 + A1: 1999

UL 94: 1996-10
Tests for flammability of plastic materials for parts in devices and appliances

VBG 4: 1979-04
Electric installation and equipment

COUNCIL DIRECTIVE
of 3 May 1989 on the approximation of the laws of the Member States relating to electromagnetic compatibility (89/336/EEC)

facts

List of approval and test institutes and test laboratories

facts & DATA

	AVK-TV	Arbeitsgemeinschaft Verstärkte Kunststoffe-Techn. Vereinigung e. V., Germany
BVS	BVS	Bergbau Versuchstrecke (DMT), Germany
BSI	BSI	British Standards Institution, Great Britain
	BBJ	Biuro Badawcze ds. Jakosci, Poland
BV	BV	Bureau Veritas, France
	CSA	Canadian Standards Association, Canada
CCA	CCA	CCA-NTR, CENELEC CERTIFICATION AGREEMENT-
	AU	Chief Electrical Inspector, Victoria, Australia
CEBEC	CEBEC	Comite Electrotechnique Belge, Belgium
	DEMKO	Danmarks Elektriske Materielkontrol, Denmark
NV	DNV	Det Norske Veritas, Norway
	AU-DFT	Department of Fair Trading, NSW Consumer Protection Agency, Australia
EPM	EPM	Elektrisches Prüfamt München, Germany
	ESTI	Eidgenössisches Starkstrominspektorat, Switzerland
EIBA	EIBA	European Installation Bus Association sc , Belgium
	ELMAC	EMV Labor J. Bühne, Germany
FI	FIMKO	Electrical Inspectorate, Finnland
	EZU	Electrotechnical Testing Institute, Czech Republic
	DQS	Frankfurt, Germany
GL	GL	Germanischer Lloyd, Germany
GS	GS	Geprüfte Sicherheit, Germany
	EMCC	Ingenieurbüro EMCC Dr. Rasek, Germany
	MY-JBP	IBU Pejabat, Jabatan Bomba dan Penyelamat, Malaysia
	IMQ	Instituto Italiano del Marchio di Qualita, Italy
KEMA	KEMA	Keuring van Elektrotechnische Materialen, Netherlands, KEMA-ATEX
	IEL-Pr.Ber	Laboratorium Badawcze Oddz. Instyt. Elektrotechn. w Gdansku, Poland
LCIE	LCIE-EEX	Laboratoire Central des Industries Electriques, France
LGA	LGA	Landesgewerbeanstalt Bayern, Germany
LCIE-PrBer	LCIE-PrBer	LCIE-Prüfbericht, France
LR	LR	Lloyd's Register of Shipping, Great Britain

For more information visit us on the internet under www.wieland-electric.com

	MEEI	Magyar Elektrotechnikai Ellenoerzoe Intezet, Hungary
	NEMKO	Norges Elektriske Materiellkontroll, Norway
	ÖVE	Österreichischer Verband für Elektrotechnik, Austria
PTB	PTB	Physikalisch-Technische Bundesanstalt, Germany
	BGFE	Prüf-u. Zert.stelle der Berufsgen. der Feinmech. u. Elektrt., Germany
RINA	RINA	Registro Italiano Navale, Italy
	Belstandart	White Russia
BKI-EEx	BKI-EEx	Robbanasbiztos Villamos Berendezesek Vizsgalo Allomasa, Hungary
	GOST R	Russian Federation
	Russ. Reg	Russ. Reg. of Shipping, Russia
	SEV	Schweizerischer Elektrotechnischer Verein, Switzerland
	EMV-SIE	Siemens AG, AUT GT 6, Germany
SEV-EEX	SEV-EEX	SEV Ex-Labor „Explosionsschutz", Switzerland
	SKTC	Slovak Testing Centre, Elektrotechnicky ustav a.s., Slovakia
	SIQ	Slovenian Institute of Quality and Metrology, Slovenia
	MPA	Staatliche Materialprüfungsanstalt Darmstadt, Germany
	SEMKO	Svenska Elektriska Materielkontrollanstalten, Sweden
TÜV	TÜV	Technischer Überwachungsverein, Germany
ASTA	ASTA	The Association of Short Circuit Testing Authoryties, Great Britain
	Ukrdershst	Ukrdershstandart, Ukraine
	ULlist	Underwriters Laboratories Inc.(UL Listed), USA
	ULrec	Underwriters Laboratories Inc.(UL Recogn.), USA
	UTE	Union Technique de l'Electricite, France
	VDE-UG	VDE Gutachten mit Fertigungsüberwachung, Germany
	VDE-PB	VDE Pruefbericht zur Information des Herstellers, Germany
	VDE	Verband Deutscher Elektrotechniker e.V., Germany
	ZIK	Zavod za Ispitivanje Kvalitete robe, Croatia

Approval marks for "special tests"

	C UR US	Underwr. Lab. Inc.(C-UL Recogn.-US), USA/Canada
	C UL US	Underwr. Lab. Inc.(C-UL Listed-US), USA/Canada

Table of contents, structured as per type description and part number

contents TYPE/PART NUMBER

contents

contents of type description

contents TYPE

Type	Part no.	section / page
,0 BIS 11,0 MM	Z2.803.0228.0	210
,0 BIS 11,0 MM	Z2.803.1428.0	212
,5 BIS 13,5 MM	Z2.803.0328.0	210
,5 BIS 6,5 MM	Z2.803.1328.0	212
.ADC 1 GELB	04.344.0153.8	232
/ 70 E S35	Z2.302.0421.0	111
0,0 BIS 17,0 MM	Z2.803.1528.0	212
0,2 -0,56 QMM	02.124.0900.0	683
0,2 -0,56 QMM	02.124.0929.0	683
0,2 -0,56 QMM	05.544.0900.0	683
0,2 -0,56 QMM	05.544.0929.0	683
0,5 -01,5 QMM	02.124.1000.0	683
0,5 -1,5 QMM	02.124.1029.0	683
0,5 -1,5 QMM	05.544.1000.0	683
0,5 -1,5 QMM	05.544.1029.0	683
0,5 -1,5 QMM VERGOLDET	02.124.1400.0	683
0,5 -1,5 QMM VERGOLDET	02.124.1429.0	683
0,5 -1,5 QMM VERGOLDET	05.544.1429.0	683
0,5 -1,5 QNN VERGOLDET	05.544.1400.0	683
1027	14.230.0270.0	262
1029	14.220.0370.0	262
1031	14.220.0270.0	262
1032	14.200.0270.0	262
1032 DS	14.201.0270.0	262
1032 M 3.5	14.200.1270.0	262
1033	14.200.0370.0	262
1033 DS	14.201.0370.0	262
1033 A	14.200.0470.0	262
1033 A DS	14.201.0470.0	262
1033 A M 3.5	14.200.1470.0	262
1033 AP KR	14.290.0440.0	262
1033 AP DS KR	14.291.0440.0	262
1033 M 3.5	14.200.1370.0	262
1036 R	05.590.3121.0	263
1038 A	30.400.0675.0	263
1038 A DS	30.401.0475.0	263
1038 B	30.400.1075.0	263
1038 B DS	30.401.0675.0	263
1038 C	30.400.1675.0	263
1038 C DS	30.401.1075.0	263
1039 M	98.060.0000.0	263
1039 W	05.522.0725.0	263
10A	05.595.6200.0	128
10A	05.595.9500.0	128
10E	21.330.6253.0	259
10E / 1	21.330.5153.0	259
10E / 1 DS	21.331.5153.0	259
10E / 2	21.330.5253.0	259
10E / 2 BZ	04.070.0280.0	260
10E / 2 DS	21.331.5253.0	259
10E / 3	21.330.5353.0	259
10E / 3 BZ	04.070.0380.0	260
10E / 3 DS	21.331.5353.0	259
10E / 4	21.330.5453.0	259
10E / 4 BZ	04.070.0480.0	260
10E / 4 DS	21.331.5453.0	259
10E / 5	21.330.5553.0	259
10E / 5 BZ	04.070.0580.0	260
10E / 5 DS	21.331.5553.0	259
10E / 6	21.330.5653.0	259
10E / 6 BZ	04.070.0680.0	260
10E / 6 DS	21.331.5653.0	259
10E / 7	21.330.5753.0	259
10E / 7 DS	21.331.5753.0	259
10E / 8	21.330.5853.0	259
10E / 8 DS	21.331.5853.0	259
10E / 9	21.330.5953.0	259
10E / 9 DS	21.331.5953.0	259
10E / M BZ	04.070.1380.0	260
10E / 10	21.330.6053.0	259
10E / 10 DS	21.331.6053.0	259
10E / 12 BZ	04.070.1280.0	260
10E / 12 DBZ	04.071.1280.0	260
10E DS	21.331.6253.0	259
110 VDC 1W	Z8.000.0181.0	456
110 VDC 2W	Z8.000.0176.2	458
110/220V 1 UMSCHALTER	57.800.5153.0	450
111..BIS 000..	04.841.9050.0	395
111..BIS 000..	04.841.9050.0	791
111..BIS 000..	04.841.9050.0	181
13 BFK / 4 TOP K OB	25.840.3453.0	292
134/ 14	25.500.1453.0	360
16,0 BIS 24,0 MM	Z2.803.1628.0	212
16A	05.595.6300.0	128
16E	21.340.6253.0	259
16E / 1	21.340.5153.0	259
16E / 1 DS	21.341.5153.0	259
16E / 2	21.340.5253.0	259
16E / 2 BZ	04.090.0280.0	260
16E / 2 DS	21.341.5253.0	259
16E / 3	21.340.5353.0	259
16E / 3 BZ	04.090.0380.0	260
16E / 3 DS	21.341.5353.0	259
16E / 4	21.340.5453.0	259
16E / 4 BZ	04.090.0480.0	260
16E / 4 DS	21.341.5453.0	259
16E / 5	21.340.5553.0	259
16E / 5 BZ	04.090.0580.0	260
16E / 5 DS	21.341.5553.0	259
16E / 6	21.340.5653.0	259
16E / 6 BZ	04.090.0680.0	260
16E / 6 DS	21.341.5653.0	259
16E / 7	21.340.5753.0	259
16E / 7 DS	21.341.5753.0	259
16E / 8	21.340.5853.0	259
16E / 8 DS	21.341.5853.0	259
16E / 9	21.340.5953.0	259
16E / 9 DS	21.341.5953.0	259
16E / M BZ	04.090.1380.0	260
16E / 10	21.340.6053.0	259
16E / 10 DS	21.341.6053.0	259
16E / 12 BZ	04.090.1280.0	260
16E DS	21.341.6253.0	259
18 X 3 M SN 1000MM	98.291.1000.0	213
1X 9P BUCHSE LOET	Z7.415.0010.0	756
1X 9P STECKER LOET	Z7.415.0235.0	756
1X15P BUCHSE LOET	Z7.415.0810.0	756
1X15P STECKER LOET	Z7.415.1035.0	756
1X25+1X15P BUCHSE LOET	Z7.415.1810.0	756
1X25+1X15P STECKER LOET	Z7.415.2135.0	756
1X25P BUCHSE LOET	Z7.415.1610.0	756
1X25P STECKER LOET	Z7.415.1935.0	756
1X37P BUCHSE LOET	Z7.415.2410.0	756
1X37P STECKER LOET	Z7.415.2635.0	756
1X50P BUCHSE LOET	Z7.415.3210.0	756
1X50P STECKER LOET	Z7.415.3335.0	756
2 DIN 46284 ST	14.210.0270.0	262
2 D DIN 46284 ST	14.211.0270.0	262
2,08 GELB	05.596.6127.0	797
2,5 BIS 16,5 MM	Z2.803.0428.0	210
2072 / 2	Z7.220.0227.0	141
2072 / 3	Z7.220.0327.0	164
2072 / 4	Z7.220.0427.0	164
2072 / 5	Z7.220.0527.0	164
2072 / 6	Z7.220.0627.0	141
2072 M	Z7.210.1027.0	164
20A	05.595.6400.0	128
20E	21.340.4253.0	259
20E / 1	21.340.3153.0	259
20E / 1 DS	21.341.3153.0	259
20E / 2	21.340.3253.0	259
20E / 2 DS	21.341.3253.0	259
20E / 3	21.340.3353.0	259
20E / 3 DS	21.341.3353.0	259
20E / 4	21.340.3453.0	259
20E / 4 DS	21.341.3453.0	259
20E / 5	21.340.3553.0	259
20E / 5 DS	21.341.3553.0	259
20E / 6	21.340.3653.0	259
20E / 6 DS	21.341.3653.0	259
20E / 7	21.340.3753.0	259
20E / 7 DS	21.341.3753.0	259
20E / 8	21.340.3853.0	259
20E / 8 DS	21.341.3853.0	259
20E / 9	21.340.3953.0	259
20E / 9 DS	21.341.3953.0	259
20E / 10	21.340.4053.0	259
20E / 10 DS	21.341.4053.0	259
20E DS	21.341.4253.0	259
2163	Z5.522.1923.0	215
220 V AC 1 SCHLIESSER	57.800.0353.0	450
24 Gehaeuse-UT	Z5.574.0153.0	782
24 V 1 SCHLIESSER	57.800.0053.0	448
24 V 2 UMSCHALTER	57.800.7053.0	449
24 VDC 1W	Z8.000.0056.9	454
24 VDC 2W	Z8.000.0035.5	455
24/48V 1 UMSCHALTER	57.800.5053.0	448
25A	05.595.6500.0	128
2A	05.595.5900.0	128
2A	05.595.9200.0	128
2X 9P BUCHSE LOET	Z7.415.0110.0	756
2X 9P STECKER LOET	Z7.415.0335.0	756
2X15P BUCHSE LOET	Z7.415.0910.0	756
2X15P STECKER LOET	Z7.415.1135.0	756
2X25P BUCHSE LOET	Z7.415.1710.0	756
2X25P STECKER LOET	Z7.415.2035.0	756
2X37P BUCHSE LOET	Z7.415.2510.0	756
2X37P STECKER LOET	Z7.415.2735.0	756
2X50P BUCHSE LOET	Z7.415.3410.0	756
2X50P STECKER LOET	Z7.415.3535.0	756
3 DIN 46284 ST	14.210.0370.0	262
3 D DIN 46284 ST	14.211.0370.0	262
300	90.100.0554.0	182
300 / 9708 / 2 S35	69.920.0553.0	47
300 B	90.100.1154.0	182
300 B K	90.100.1354.0	182
300 K	90.100.1254.0	182
301	90.100.0754.0	182
301 K	90.100.1454.0	182
303	90.100.0854.0	182
303 K	90.100.1554.0	182
305	90.100.1054.0	182
305 K	90.100.1654.0	182
315 E	05.590.0052.0	182
315 GC	90.811.3055.0	182
315 GK	90.810.3055.0	182
319 / 13.5 K ELFB.	90.800.1055.8	182
319 / 13.5 K SCHW.	90.800.1055.1	182
319 / 17.5 K ELFB.	90.800.2055.8	182
319 / 17.5 K SCHW.	90.800.2055.1	182
35 X 24 X 15 EN 60715	98.360.0000.0	584
35 X 24 X 15 EN 60715	98.360.0000.0	803
35 X 24 X 15 EN 60715	98.360.0000.0	308
35 X 24 X 15 EN 60715	98.360.0000.0	20
35 X 27 X 15	98.370.0000.0	38
35 X 27 X 15	98.370.0000.0	803
35 X 27 X 15 GELOCHT 1M	98.375.1000.0	803
35 X 27 X 15 GELOCHT 2M	98.370.1000.0	46
35 X 27 X 15 GELOCHT 2M	98.370.1000.0	803
35A	05.595.6600.0	128
35x24x15 EN 60715 FZN	98.360.0004.0	46
35X24X15 EN60715 CU	98.380.0000.0	803
35X24X15 EN60715 CU	98.380.0000.0	47
35X27X 7,5 GELOCHT	98.300.1000.0	803
35X27X 7,5 GELOCHT	98.300.1000.0	19
35X27X7,5 EN 60715 1M	98.305.1000.0	803
35X27X7,5 EN 60715 2M	98.300.0000.0	20
35X27X7,5 EN 60715 2M	98.300.0000.0	308
35X27X7,5 EN 60715 2M	98.300.0000.0	803
35X27X7,5 EN 60715 2M	98.300.0000.0	584
35x27x7,5 EN60715 BLANK	98.300.0010.0	46
4A	05.595.6000.0	128
4A	05.595.9300.0	128
4E	21.304.1253.0	257
4E / 1	21.304.0153.0	257
4E / 1 DS	21.305.0153.0	257
4E / 2	21.304.0253.0	257
4E / 2 DS	21.305.0253.0	257
4E / 3	21.304.0353.0	257
4E / 3 DS	21.305.0353.0	257
4E / 4	21.304.0453.0	257
4E / 4 DS	21.305.0453.0	257
4E / 5	21.304.0553.0	257
4E / 5 DS	21.305.0553.0	257
4E / 6	21.304.0653.0	257
4E / 6 DS	21.305.0653.0	257
4E / 7	21.304.0753.0	257
4E / 7 DS	21.305.0753.0	257
4E / 8	21.304.0853.0	257
4E / 8 DS	21.305.0853.0	257
4E / 9	21.304.0953.0	257
4E / 9 DS	21.305.0953.0	257
4E / 10	21.304.1053.0	257
4E / 10 DS	21.305.1053.0	257
4E / 11	21.304.1153.0	257
4E / 11 DS	21.305.1153.0	257
4E DS	21.305.1253.0	257
4Q DC24V 2A	99.801.3900.9	538
50A	05.595.6700.0	128
513 S / 13 W	25.647.1353.0	284
547	14.100.0170.0	261
548	14.100.0270.0	261
549	14.100.0370.0	261
6 X 6 1000MM	98.325.1000.0	216
6 X 6 2000MM	98.320.0000.0	216
6/10/16 Gehaeuse-UT	Z5.574.0053.0	782
6A	05.595.6100.0	128
6A	05.595.9400.0	128
6E	21.310.1253.0	258
6E / 1	21.310.0153.0	258
6E / 1 DS	21.311.0153.0	258
6E / 2	21.310.0253.0	258
6E / 2 DS	21.311.0253.0	258
6E / 3	21.310.0353.0	258
6E / 3 DS	21.311.0353.0	258
6E / 4	21.310.0453.0	258
6E / 4 DS	21.311.0453.0	258
6E / 5 DS	21.311.0553.0	258
6E / 6	21.310.0653.0	258
6E / 6 DS	21.311.0653.0	258
6E / 7	21.310.0753.0	258
6E / 7 DS	21.311.0753.0	258
6E / 8	21.310.0853.0	258
6E / 8 DS	21.311.0853.0	258
6E / 9	21.310.0953.0	258
6E / 9 DS	21.311.0953.0	258
6E / 10	21.310.1053.0	258
6E / 10 DS	21.311.1053.0	258
6E DS	21.311.1253.0	258
6E H	21.312.1253.0	257
6E H / 1	21.312.0153.0	257
6E H / 1 DS	21.313.0153.0	257
6E H / 2	21.312.0253.0	257
6E H / 2 DS	21.313.0253.0	257
6E H / 3	21.312.0353.0	257
6E H / 3 DS	21.313.0353.0	257
6E H / 4	21.312.0453.0	257
6E H / 4 DS	21.313.0453.0	257
6E H / 5	21.312.0553.0	257
6E H / 5 DS	21.313.0553.0	257
6E H / 6	21.312.0653.0	257
6E H / 6 DS	21.313.0653.0	257
6E H / 7	21.312.0753.0	257
6E H / 7 DS	21.313.0753.0	257
6E H / 8	21.312.0853.0	257
6E H / 8 DS	21.313.0853.0	257
6E H / 9	21.312.0953.0	257
6E H / 9 DS	21.313.0953.0	257
6E H / 10	21.312.1053.0	257
6E H / 10 DS	21.313.1053.0	257
6E H / 11	21.312.1153.0	257
6E H / 11 DS	21.313.1153.0	257
6E H DS	21.313.1253.0	257
6E SONDERA.	99.262.3521.9	258
6E SONDERA.	99.263.3521.9	258
6E SONDERA.	99.264.3521.9	258
6E SONDERA.	99.265.3521.9	258
6E SONDERA.	99.266.3521.9	258
6E SONDERA.	99.267.3521.9	258
6E SONDERA.	99.268.3521.9	258
6E SONDERA.	99.270.3521.9	258
6ES	22.310.1253.0	258
6ES / 1	22.310.0153.0	258
6ES / 2	22.310.0253.0	258
6ES / 3	22.310.0353.0	258
6ES / 4	22.310.0453.0	258
6ES / 5	22.310.0553.0	258
6ES / 6	22.310.0653.0	258
6ES / 7	22.310.0753.0	258
6ES / 8	22.310.0853.0	258
6ES / 9	22.310.0953.0	258

contents

Type	Part no.	section / page
6ES / 10	22.310.1053.0	258
7386 / 3 TOP H OB	27.714.0353.0	355
7386 / 6 TOP H OB	27.714.0653.0	355
7572 L2 / 2 OB	27.002.2253.0	376
7572 L2 / 3 / 2 OB	27.002.4253.0	377
7572 L2 / 3 OB	27.002.2353.0	376
7572 L2 / 5 / 3 OB	27.002.4353.0	377
7572 L4 / 2 OB	27.002.0253.0	376
7572 L4 / 3 OB	27.002.0353.0	376
7573 L2 / 3 W OB	27.002.6353.0	375
7573 L2 / 4 W OB	27.002.6453.0	375
8006 / 2 BZ	04.030.0080.0	260
8006 / 3 BZ	04.030.0180.0	260
8006 / 4 BZ	04.030.0280.0	260
8006 / 5 BZ	04.030.0380.0	260
8006 / 6 BZ	04.030.0480.0	260
8006 / 12 BZ	04.030.1080.0	260
8006 M BZ	04.030.1180.0	260
8016 / 2 BZ	04.080.0080.0	260
8016 / 3 BZ	04.080.0180.0	260
8016 / 4 BZ	04.080.0280.0	260
8016 / 5 BZ	04.080.0380.0	260
8016 / 6 BZ	04.080.0480.0	260
8016 / 12 BZ	04.080.1080.0	260
8016 M BZ	04.080.1180.0	260
8105 / B 2 C5 VR OB	15.025.0253.0	382
8105 B / 2 C0 OB	15.000.0253.0	382
8105 B / 2 C0 VL OB	15.010.0253.0	383
8105 B / 2 C0 VR OB	15.020.0253.0	382
8105 B / 2 C1 OB	15.001.0253.0	382
8105 B / 2 C1 VL OB GR	15.011.0253.0	383
8105 B / 2 C1 VR OB	15.021.0253.0	382
8105 B / 2 C2 OB	15.002.0253.0	382
8105 B / 2 C2 VL OB GR	15.012.0253.0	383
8105 B / 2 C2 VR OB GR	15.022.0253.0	382
8105 B / 2 C3 OB	15.003.0253.0	382
8105 B / 2 C3 VL OB	15.013.0253.0	383
8105 B / 2 C3 VR OB	15.023.0253.0	382
8105 B / 2 C4 OB	15.004.0253.0	382
8105 B / 2 C4 VL OB	15.014.0253.0	383
8105 B / 2 C4 VR OB GR	15.024.0253.0	382
8105 B / 2 C5 OB	15.005.0253.0	382
8105 B / 2 C5 VL OB	15.015.0253.0	383
8105 B / 2 C6 OB	15.006.0253.0	382
8105 B / 2 C6 OB	15.016.0253.0	383
8105 B / 2 C6 VR OB	15.026.0253.0	382
8105 B / 2 C7 OB	15.007.0253.0	382
8105 B / 2 C7 VL OB	15.017.0253.0	383
8105 B / 2 C7 VR OB GR	15.027.0253.0	382
8105 B / 3 C0 OB	15.000.0353.0	382
8105 B / 3 C0 VL OB	15.010.0353.0	383
8105 B / 3 C0 VR OB	15.020.0353.0	382
8105 B / 3 C1 OB	15.001.0353.0	382
8105 B / 3 C1 VL OB	15.011.0353.0	383
8105 B / 3 C1 VR OB	15.021.0353.0	382
8105 B / 3 C2 OB	15.002.0353.0	382
8105 B / 3 C2 VL OB GR	15.012.0353.0	383
8105 B / 3 C2 VR OB GR	15.022.0353.0	382
8105 B / 3 C3 OB	15.003.0353.0	382
8105 B / 3 C3 VL OB	15.013.0353.0	383
8105 B / 3 C3 VR OB GR	15.023.0353.0	382
8105 B / 3 C4 OB	15.004.0353.0	382
8105 B / 3 C4 VL OB	15.014.0353.0	383
8105 B / 3 C4 VR OB GR	15.024.0353.0	382
8105 B / 3 C5 OB	15.005.0353.0	382
8105 B / 3 C5 VL OB	15.015.0353.0	383
8105 B / 3 C5 VR OB GR	15.025.0353.0	382
8105 B / 3 C6 OB	15.016.0353.0	383
8105 B / 3 C6 OB GR	15.006.0353.0	382
8105 B / 3 C6 VR OB	15.026.0353.0	382
8105 B / 3 C7 OB	15.007.0353.0	382
8105 B / 3 C7 VL OB	15.017.0353.0	383
8105 B / 3 C7 VR OB	15.027.0353.0	382
8105 B / 4 C0 OB	15.000.0453.0	382
8105 B / 4 C0 VL OB	15.010.0453.0	383
8105 B / 4 C0 VR OB	15.020.0453.0	382
8105 B / 4 C1 OB	15.001.0453.0	382
8105 B / 4 C1 VL OB	15.011.0453.0	383
8105 B / 4 C1 VR OB GR	15.021.0453.0	382
8105 B / 4 C2 OB	15.002.0453.0	382
8105 B / 4 C2 VL OB	15.012.0453.0	383
8105 B / 4 C2 VR OB	15.022.0453.0	382
8105 B / 4 C3 OB	15.003.0453.0	382
8105 B / 4 C3 VL OB	15.013.0453.0	383
8105 B / 4 C3 VR OB	15.023.0453.0	382
8105 B / 4 C4 OB	15.004.0453.0	382
8105 B / 4 C4 VL OB	15.014.0453.0	383
8105 B / 4 C4 VR OB GR	15.024.0453.0	382
8105 B / 4 C5 OB	15.005.0453.0	382
8105 B / 4 C5 VL OB	15.015.0453.0	383
8105 B / 4 C5 VR OB GR	15.025.0453.0	382
8105 B / 4 C6 OB	15.006.0453.0	382
8105 B / 4 C6 VL OB	15.016.0453.0	383
8105 B / 4 C6 VR OB	15.026.0453.0	382
8105 B / 5 C0 OB	15.000.0553.0	382
8105 B / 5 C0 VL OB	15.010.0553.0	383
8105 B / 5 C0 VR OB	15.020.0553.0	382
8105 B / 5 C1 OB	15.001.0553.0	382
8105 B / 5 C1 VL OB	15.011.0553.0	383
8105 B / 5 C1 VR OB	15.021.0553.0	382
8105 B / 5 C2 OB	15.002.0553.0	382
8105 B / 5 C2 VL OB	15.012.0553.0	383
8105 B / 5 C2 VR OB	15.022.0553.0	382
8105 B / 6 C0 OB	15.000.0653.0	382
8105 B / 6 C0 OB	15.001.0653.0	382
8105 B / 6 C0 VL OB	15.010.0653.0	383
8105 B / 6 C0 VR OB	15.020.0653.0	382
8105 B / 6 C1 VL OB	15.011.0653.0	383
8105 B / 6 C1 VR OB	15.021.0653.0	382
8105 B / 6 C2 OB GR	15.002.0653.0	382
8105 B / 6 C2 VL OB	15.012.0653.0	383
8105 B / 6 C2 VR OB	15.022.0653.0	382
8105 B / 7 C0 OB	15.000.0753.0	382
8105 B / 7 C0 VL OB	15.010.0753.0	383
8105 B / 7 C0 VR OB	15.020.0753.0	382
8105 B / 7 C1 OB	15.001.0753.0	382
8105 B / 7 C1 VL OB	15.011.0753.0	383
8105 B / 7 C1 VR OB	15.021.0753.0	382
8105 B / 7 C2 OB	15.002.0753.0	382
8105 B / 7 C2 VL OB	15.012.0753.0	383
8105 B / 7 C2 VR OB	15.022.0753.0	382
8105 F / 2 G C1 OB NT	15.301.0258.9	383
8105 F / 2 G C2 OB NT	15.302.0258.9	383
8105 F / 2 G C3 OB NT	15.303.0258.9	383
8105 F / 2 G C4 OB NT	15.304.0258.9	383
8105 F / 2 G C5 OB NT	15.305.0258.9	383
8105 F / 2 G C6 OB NT	15.306.0258.9	383
8105 F / 2 G C7 OB NT	15.307.0258.9	383
8105 F / 2 W C1 OB NT	15.311.0258.9	383
8105 F / 2 W C2 OB NT	15.312.0258.9	383
8105 F / 2 W C3 OB NT	15.313.0258.9	383
8105 F / 2 W C4 OB NT	15.314.0258.9	383
8105 F / 2 W C5 OB NT	15.315.0258.9	383
8105 F / 2 W C6 OB NT	15.316.0258.9	383
8105 F / 3 G C1 OB NT	15.301.0358.9	383
8105 F / 3 G C2 OB NT	15.302.0358.9	383
8105 F / 3 G C3 OB NT	15.303.0358.9	383
8105 F / 3 G C4 OB NT	15.304.0358.9	383
8105 F / 3 G C5 OB NT	15.305.0358.9	383
8105 F / 3 G C6 OB NT	15.306.0358.9	383
8105 F / 3 G C7 OB NT	15.307.0358.9	383
8105 F / 3 W C1 OB NT	15.311.0358.9	383
8105 F / 3 W C2 OB NT	15.312.0358.9	383
8105 F / 3 W C3 OB NT	15.313.0358.9	383
8105 F / 3 W C4 OB NT	15.314.0358.9	383
8105 F / 3 W C5 OB NT	15.315.0358.9	383
8105 F / 3 W C6 OB NT	15.316.0358.9	383
8105 F / 3 W C7 OB NT	15.317.0358.9	383
8105 F / 4 G C1 OB NT	15.301.0458.9	383
8105 F / 4 G C2 OB NT	15.302.0458.9	383
8105 F / 4 G C3 OB NT	15.303.0458.9	383
8105 F / 4 G C4 OB NT	15.304.0458.9	383
8105 F / 4 G C5 OB NT	15.305.0458.9	383
8105 F / 4 G C6 OB NT	15.306.0458.9	383
8105 F / 4 W C1 OB NT	15.311.0458.9	383
8105 F / 4 W C2 OB NT	15.312.0458.9	383
8105 F / 4 W C3 OB NT	15.313.0458.9	383
8105 F / 4 W C4 OB NT	15.314.0458.9	383
8105 F / 4 W C5 OB NT	15.315.0458.9	383
8105 F / 4 W C6 OB NT	15.316.0458.9	383
8105 F / 5 G C1 OB NT	15.301.0558.9	383
8105 F / 5 G C2 OB NT	15.302.0558.9	383
8105 F / 5 W C1 OB NT	15.311.0558.9	383
8105 F / 5 W C2 OB NT	15.312.0558.9	383
8105 F / 6 G C1 OB NT	15.301.0658.9	383
8105 F / 6 G C2 OB NT	15.302.0658.9	383
8105 F / 6 W C1 OB NT	15.311.0658.9	383
8105 F / 6 W C2 OB NT	15.312.0658.9	383
8105 F / 7 G C1 OB NT	15.301.0758.9	383
8105 F / 7 G C2 OB NT	15.302.0758.9	383
8105 F / 7 W C1 OB NT	15.311.0758.9	383
8105 F / 7 W C2 OB NT	15.312.0758.9	383
8105 F / Z W C7 OB NT	15.317.0258.9	383
8113 / 16 WF OB	25.339.4653.0	299
8113 B / 2	25.320.0253.0	286
8113 B / 2 F	25.322.0253.0	286
8113 B / 2 F OB	25.322.3253.0	286
8113 B / 2 OB	25.320.3253.0	286
8113 B / 2 TOP	25.220.0253.0	296
8113 B / 2 TOP LED OB	25.230.3253.0	296
8113 B / 2 TOP OB	25.220.3253.0	296
8113 B / 2 VL	25.326.0253.0	289
8113 B / 2 VL OB	25.326.3253.0	289
8113 B / 2 VR	25.325.0253.0	289
8113 B / 2 VR OB	25.325.3253.0	289
8113 B / 3	25.320.0353.0	286
8113 B / 3 F	25.322.0353.0	286
8113 B / 3 F OB	25.322.3353.0	286
8113 B / 3 OB	25.320.3353.0	286
8113 B / 3 TOP	25.220.0353.0	296
8113 B / 3 TOP LED OB	25.230.3353.0	296
8113 B / 3 TOP OB	25.220.3353.0	296
8113 B / 3 VL	25.326.0353.0	289
8113 B / 3 VL OB	25.326.3353.0	289
8113 B / 3 VR	25.325.0353.0	289
8113 B / 3 VR OB	25.325.3353.0	289
8113 B / 4	25.320.0453.0	286
8113 B / 4 F	25.322.0453.0	286
8113 B / 4 F OB	25.322.3453.0	286
8113 B / 4 OB	25.320.3453.0	286
8113 B / 4 TOP	25.220.0453.0	296
8113 B / 4 TOP LED OB	25.230.3453.0	296
8113 B / 4 TOP OB	25.220.3453.0	296
8113 B / 4 VL	25.326.0453.0	289
8113 B / 4 VL OB	25.326.3453.0	289
8113 B / 4 VR	25.325.0453.0	289
8113 B / 4 VR OB	25.325.3453.0	289
8113 B / 5	25.320.0553.0	286
8113 B / 5 F	25.322.0553.0	286
8113 B / 5 F OB	25.322.3553.0	286
8113 B / 5 OB	25.320.3553.0	286
8113 B / 5 TOP	25.220.0553.0	296
8113 B / 5 TOP LED OB	25.230.3553.0	296
8113 B / 5 TOP OB	25.220.3553.0	296
8113 B / 5 VL	25.326.0553.0	289
8113 B / 5 VL OB	25.326.3553.0	289
8113 B / 5 VR	25.325.0553.0	289
8113 B / 5 VR OB	25.325.3553.0	289
8113 B / 6	25.320.0653.0	286
8113 B / 6 F	25.322.0653.0	286
8113 B / 6 F OB	25.322.3653.0	286
8113 B / 6 OB	25.320.3653.0	286
8113 B / 6 TOP	25.220.0653.0	296
8113 B / 6 TOP LED OB	25.230.3653.0	296
8113 B / 6 TOP OB	25.220.3653.0	296
8113 B / 6 VL	25.326.0653.0	289
8113 B / 6 VL OB	25.326.3653.0	289
8113 B / 6 VR	25.325.0653.0	289
8113 B / 6 VR OB	25.325.3653.0	289
8113 B / 7	25.320.0753.0	286
8113 B / 7 F	25.322.0753.0	286
8113 B / 7 F OB	25.322.3753.0	286
8113 B / 7 OB	25.320.3753.0	286
8113 B / 7 TOP	25.220.0753.0	296
8113 B / 7 TOP LED OB	25.230.3753.0	296
8113 B / 7 TOP OB	25.220.3753.0	296
8113 B / 7 VL	25.326.0753.0	289
8113 B / 7 VL OB	25.326.3753.0	289
8113 B / 7 VR	25.325.0753.0	289
8113 B / 7 VR OB	25.325.3753.0	289
8113 B / 8	25.320.0853.0	286
8113 B / 8 F	25.322.0853.0	286
8113 B / 8 F OB	25.322.3853.0	286
8113 B / 8 OB	25.320.3853.0	286
8113 B / 8 TOP	25.220.0853.0	296
8113 B / 8 TOP LED OB	25.230.3853.0	296
8113 B / 8 TOP OB	25.220.3853.0	296
8113 B / 8 VL	25.326.0853.0	289
8113 B / 8 VL OB	25.326.3853.0	289
8113 B / 8 VR	25.325.0853.0	289
8113 B / 8 VR OB	25.325.3853.0	289
8113 B / 9	25.320.0953.0	286
8113 B / 9 F	25.322.0953.0	286
8113 B / 9 F OB	25.322.3953.0	286
8113 B / 9 OB	25.320.3953.0	286
8113 B / 9 TOP	25.220.0953.0	296
8113 B / 9 TOP LED OB	25.230.3953.0	296
8113 B / 9 TOP OB	25.220.3953.0	296
8113 B / 9 VL	25.326.0953.0	289
8113 B / 9 VL OB	25.326.3953.0	289
8113 B / 9 VR	25.325.0953.0	289
8113 B / 9 VR OB	25.325.3953.0	289
8113 B / 10	25.320.1053.0	286
8113 B / 10 F	25.322.1053.0	286
8113 B / 10 F OB	25.322.4053.0	286
8113 B / 10 OB	25.320.4053.0	286
8113 B / 10 TOP	25.220.1053.0	296
8113 B / 10 TOP LED OB	25.230.4053.0	296
8113 B / 10 TOP OB	25.220.4053.0	296
8113 B / 10 VL	25.326.1053.0	289
8113 B / 10 VL OB	25.326.4053.0	289
8113 B / 10 VR	25.325.1053.0	289
8113 B / 10 VR OB	25.325.4053.0	289
8113 B / 11	25.320.1153.0	286
8113 B / 11 F	25.322.1153.0	286
8113 B / 11 F OB	25.322.4153.0	286
8113 B / 11 OB	25.320.4153.0	286
8113 B / 11 TOP	25.220.1153.0	296
8113 B / 11 TOP LED OB	25.230.4153.0	296
8113 B / 11 TOP OB	25.220.4153.0	296
8113 B / 11 VL	25.326.1153.0	289
8113 B / 11 VL OB	25.326.4153.0	289
8113 B / 11 VR	25.325.1153.0	289
8113 B / 11 VR OB	25.325.4153.0	289
8113 B / 12	25.320.1253.0	286
8113 B / 12 F	25.322.1253.0	286
8113 B / 12 F OB	25.322.4253.0	286
8113 B / 12 OB	25.320.4253.0	286
8113 B / 12 TOP	25.220.1253.0	296
8113 B / 12 TOP LED OB	25.230.4253.0	296
8113 B / 12 TOP OB	25.220.4253.0	296
8113 B / 12 VL	25.326.1253.0	289
8113 B / 12 VL OB	25.326.4253.0	289
8113 B / 12 VR	25.325.1253.0	289
8113 B / 12 VR OB	25.325.4253.0	289
8113 B / 13	25.320.1353.0	286
8113 B / 13 F	25.322.1353.0	286
8113 B / 13 F OB	25.322.4353.0	286
8113 B / 13 OB	25.320.4353.0	286
8113 B / 13 TOP	25.220.1353.0	296
8113 B / 13 TOP OB	25.220.4353.0	296
8113 B / 13 VL	25.326.1353.0	289
8113 B / 13 VL OB	25.326.4353.0	289
8113 B / 13 VR	25.325.1353.0	289
8113 B / 13 VR OB	25.325.4353.0	289
8113 B / 14	25.320.1453.0	286
8113 B / 14 F	25.322.1453.0	286
8113 B / 14 F OB	25.322.4453.0	286
8113 B / 14 OB	25.320.4453.0	286
8113 B / 14 TOP	25.220.1453.0	296
8113 B / 14 TOP OB	25.220.4453.0	296
8113 B / 14 VL	25.326.1453.0	289
8113 B / 14 VL OB	25.326.4453.0	289
8113 B / 14 VR	25.325.1453.0	289
8113 B / 14 VR OB	25.325.4453.0	289
8113 B / 15	25.320.1553.0	286
8113 B / 15 F	25.322.1553.0	286
8113 B / 15 F OB	25.322.4553.0	286
8113 B / 15 OB	25.320.4553.0	286
8113 B / 15 TOP	25.220.1553.0	296
8113 B / 15 TOP LED OB	25.230.4553.0	296

contents of type description

contents TYPE

Type	Part no.	section / page
8113 B / 15 TOP OB	25.220.4553.0	296
8113 B / 15 VL	25.326.1553.0	289
8113 B / 15 VL OB	25.326.4553.0	289
8113 B / 15 VR	25.325.1553.0	289
8113 B / 15 VR OB	25.325.4553.0	289
8113 B / 16	25.320.1653.0	286
8113 B / 16 F	25.322.1653.0	286
8113 B / 16 F OB	25.322.4653.0	286
8113 B / 16 OB	25.320.4653.0	286
8113 B / 16 TOP	25.220.1653.0	296
8113 B / 16 TOP LED OB	25.230.4653.0	296
8113 B / 16 TOP OB	25.220.4653.0	296
8113 B / 16 VL	25.326.1653.0	289
8113 B / 16 VL OB	25.326.4653.0	289
8113 B / 16 VR	25.325.1653.0	289
8113 B / 16 VR OB	25.325.4653.0	289
8113 B / 2 SK0.75 OB	25.399.9853.8	392
8113 B / 2 SK0.75 OB	25.399.9853.5	392
8113 BFK / 2 TOP K	25.820.0253.0	37
8113 BFK / 2 TOP K	25.820.0253.0	292
8113 BFK / 2 TOP K OB	25.820.3253.0	292
8113 BFK / 2 TOP K OB	25.820.3253.0	37
8113 BFK / 3 TOP K	25.820.0353.0	292
8113 BFK / 3 TOP K OB	25.820.3353.0	37
8113 BFK / 3 TOP K OB	25.820.3353.0	292
8113 BFK / 4 TOP K	25.820.0453.0	37
8113 BFK / 4 TOP K	25.820.0453.0	292
8113 BFK / 4 TOP K OB	25.820.3453.0	37
8113 BFK / 4 TOP K OB	25.820.3453.0	292
8113 BFK / 4 TOP K F OB	25.821.3453.0	292
8113 BFK / 5 TOP K	25.820.0553.0	37
8113 BFK / 5 TOP K	25.820.0553.0	292
8113 BFK / 5 TOP K OB	25.820.3553.0	292
8113 BFK / 5 TOP K OB	25.820.3553.0	37
8113 BFK / 6 TOP K	25.820.0653.0	292
8113 BFK / 6 TOP K	25.820.0653.0	37
8113 BFK / 6 TOP K OB	25.820.3653.0	292
8113 BFK / 6 TOP K OB	25.820.3653.0	37
8113 BFK / 7 TOP K	25.820.0753.0	37
8113 BFK / 7 TOP K	25.820.0753.0	292
8113 BFK / 7 TOP K OB	25.820.3753.0	37
8113 BFK / 7 TOP K OB	25.820.3753.0	292
8113 BFK / 8 TOP K	25.820.0853.0	292
8113 BFK / 8 TOP K	25.820.0853.0	37
8113 BFK / 8 TOP K OB	25.820.3853.0	292
8113 BFK / 8 TOP K OB	25.820.3853.0	37
8113 BFK / 9 TOP K	25.820.0953.0	37
8113 BFK / 9 TOP K	25.820.0953.0	292
8113 BFK / 9 TOP K OB	25.820.3953.0	292
8113 BFK / 9 TOP K OB	25.820.3953.0	37
8113 BFK /10 TOP K	25.820.1053.0	292
8113 BFK /10 TOP K	25.820.1053.0	37
8113 BFK /10 TOP K OB	25.820.4053.0	292
8113 BFK /10 TOP K OB	25.820.4053.0	37
8113 BFK /11 TOP K	25.820.1153.0	37
8113 BFK /11 TOP K	25.820.1153.0	292
8113 BFK /11 TOP K OB	25.820.4153.0	292
8113 BFK /11 TOP K OB	25.820.4153.0	37
8113 BFK /12 TOP K	25.820.1253.0	37
8113 BFK /12 TOP K	25.820.1253.0	292
8113 BFK /12 TOP K OB	25.820.4253.0	292
8113 BFK /12 TOP K OB	25.820.4253.0	37
8113 BFK /13 TOP K	25.820.1353.0	37
8113 BFK /13 TOP K	25.820.1353.0	292
8113 BFK /13 TOP K OB	25.820.4353.0	37
8113 BFK /13 TOP K OB	25.820.4353.0	292
8113 BFK /14 TOP K	25.820.1453.0	292
8113 BFK /14 TOP K	25.820.1453.0	37
8113 BFK /14 TOP K OB	25.820.4453.0	292
8113 BFK /14 TOP K OB	25.820.4453.0	37
8113 BFK /15 TOP K	25.820.1553.0	37
8113 BFK /15 TOP K	25.820.1553.0	292
8113 BFK /15 TOP K OB	25.820.4553.0	292
8113 BFK /15 TOP K OB	25.820.4553.0	37
8113 BFK /16 TOP K	25.820.1653.0	292
8113 BFK /16 TOP K	25.820.1653.0	37
8113 BFK /16 TOP K OB	25.820.4653.0	292
8113 BFK /16 TOP K OB	25.820.4653.0	37
8113 BK / 2	01.060.0253.0	291
8113 BK / 2 OB	01.060.3253.0	291
8113 BK / 3	01.060.0353.0	291
8113 BK / 3 OB	01.060.3353.0	291
8113 BK / 4	01.060.0453.0	291
8113 BK / 4 OB	01.060.3453.0	291
8113 BK / 5	01.060.0553.0	291
8113 BK / 5 OB	01.060.3553.0	291
8113 BK / 6	01.060.0653.0	291
8113 BK / 6 OB	01.060.3653.0	291
8113 BK / 7	01.060.0753.0	291
8113 BK / 7 OB	01.060.3753.0	291
8113 BK / 8	01.060.0853.0	291
8113 BK / 8 OB	01.060.3853.0	291
8113 BK / 9	01.060.0953.0	291
8113 BK / 9 OB	01.060.3953.0	291
8113 BK / 10	01.060.1053.0	291
8113 BK / 10 OB	01.060.4053.0	291
8113 BK / 11	01.060.1153.0	291
8113 BK / 11 OB	01.060.4153.0	291
8113 BK / 12	01.060.1253.0	291
8113 BK / 12 OB	01.060.4253.0	291
8113 BK / 13	01.060.1353.0	291
8113 BK / 13 OB	01.060.4353.0	291
8113 BK / 14	01.060.1453.0	291
8113 BK / 14 OB	01.060.4453.0	291
8113 BK / 15	01.060.1553.0	291
8113 BK / 15 OB	01.060.4553.0	291
8113 BK / 16	01.060.1653.0	291
8113 BK / 16 OB	01.060.4653.0	291
8113 BSK /2 0,75 OB	25.399.9853.0	392
8113 S / 14 GOF OB	99.214.9996.0	297
8113 S / 2 G OB	25.330.3253.0	297
8113 S / 2 G OB GR OF	99.202.9996.0	297
8113 S / 2 GF OB	25.338.3253.0	298
8113 S / 2 S OB GR	25.394.3253.0	302
8113 S / 2 S1 OB GR	25.395.3253.0	302
8113 S / 2 W OB	25.332.3253.0	298
8113 S / 2 W OB GR OF	99.262.9996.0	299
8113 S / 2 WF OB	25.339.3253.0	299
8113 S / 3 G OB	25.330.3353.0	297
8113 S / 3 G OB GR OF	99.203.9996.0	297
8113 S / 3 GF OB	25.338.3353.0	298
8113 S / 3 S OB GR	25.394.3353.0	302
8113 S / 3 S1 OB	25.395.3353.0	302
8113 S / 3 W OB	25.332.3353.0	298
8113 S / 3 W OB GR OF	99.263.9996.0	299
8113 S / 3 WF OB	25.339.3353.0	299
8113 S / 4 G OB	25.330.3453.0	297
8113 S / 4 G OB GR OF	99.204.9996.0	297
8113 S / 4 GF OB	25.338.3453.0	298
8113 S / 4 S OB GR	25.394.3453.0	302
8113 S / 4 S1 OB	25.395.3453.0	302
8113 S / 4 W OB	25.332.3453.0	298
8113 S / 4 W OB GR OF	99.264.9996.0	299
8113 S / 4 WF OB	25.339.3453.0	299
8113 S / 5 G OB	25.330.3553.0	297
8113 S / 5 G OB GR OF	99.205.9996.0	297
8113 S / 5 GF OB	25.338.3553.0	298
8113 S / 5 S OB GR	25.394.3553.0	302
8113 S / 5 S1 OB	25.395.3553.0	302
8113 S / 5 W OB	25.332.3553.0	298
8113 S / 5 W OB GR OF	99.265.9996.0	299
8113 S / 5 WF OB	25.339.3553.0	299
8113 S / 6 G OB	25.330.3653.0	297
8113 S / 6 G OB GR OF	99.206.9996.0	297
8113 S / 6 GF OB	25.338.3653.0	298
8113 S / 6 S OB GR	25.394.3653.0	302
8113 S / 6 S1 OB	25.395.3653.0	302
8113 S / 6 W OB	25.332.3653.0	298
8113 S / 6 W OB GR OF	99.266.9996.0	299
8113 S / 6 WF OB	25.339.3653.0	299
8113 S / 7 G OB	25.330.3753.0	297
8113 S / 7 G OB GR OF	99.207.9996.0	297
8113 S / 7 GF OB	25.338.3753.0	298
8113 S / 7 S OB GR	25.394.3753.0	302
8113 S / 7 S1 OB	25.395.3753.0	302
8113 S / 7 W OB	25.332.3753.0	298
8113 S / 7 W OB GR OF	99.267.9996.0	299
8113 S / 7 WF OB	25.339.3753.0	299
8113 S / 8 G OB	25.330.3853.0	297
8113 S / 8 G OB GR OF	99.208.9996.0	297
8113 S / 8 GF OB	25.338.3853.0	298
8113 S / 8 S OB GR	25.394.3853.0	302
8113 S / 8 S1 OB	25.395.3853.0	302
8113 S / 8 W OB	25.332.3853.0	298
8113 S / 8 W OB GR OF	99.268.9996.0	299
8113 S / 8 WF OB	25.339.3853.0	299
8113 S / 9 G OB	25.330.3953.0	297
8113 S / 9 G OB GR OF	99.209.9996.0	297
8113 S / 9 GF OB	25.338.3953.0	298
8113 S / 9 S OB GR	25.394.3953.0	302
8113 S / 9 S1 OB	25.395.3953.0	302
8113 S / 9 W OB	25.332.3953.0	298
8113 S / 9 W OB GR OF	99.269.9996.0	299
8113 S / 9 WF OB	25.339.3953.0	299
8113 S / 10 G OB	25.330.4053.0	297
8113 S / 10 G OB GR OF	99.210.9996.0	297
8113 S / 10 GF OB	25.338.4053.0	298
8113 S / 10 S OB GR	25.394.4053.0	302
8113 S / 10 S1 OB	25.395.4053.0	302
8113 S / 10 W OB	25.332.4053.0	298
8113 S / 10 W OB GR OF	99.270.9996.0	299
8113 S / 10 WF OB	25.339.4053.0	299
8113 S / 11 G OB	25.330.4153.0	297
8113 S / 11 G OB GR OF	99.211.9996.0	297
8113 S / 11 GF OB	25.338.4153.0	298
8113 S / 11 S OB GR	25.394.4153.0	302
8113 S / 11 S1 OB	25.395.4153.0	302
8113 S / 11 W OB	25.332.4153.0	298
8113 S / 11 W OB GR OF	99.271.9996.0	299
8113 S / 11 WF OB	25.339.4153.0	299
8113 S / 12 G OB	25.330.4253.0	297
8113 S / 12 G OB GR OF	99.212.9996.0	297
8113 S / 12 GF OB	25.338.4253.0	298
8113 S / 12 S OB GR	25.394.4253.0	302
8113 S / 12 S1 OB GR	25.395.4253.0	302
8113 S / 12 W OB	25.332.4253.0	298
8113 S / 12 W OB GR OF	99.272.9996.0	299
8113 S / 12 WF OB	25.339.4253.0	299
8113 S / 13 G OB	25.330.4353.0	297
8113 S / 13 G OB GR OF	99.213.9996.0	297
8113 S / 13 GF OB	25.338.4353.0	298
8113 S / 13 S OB GR	25.394.4353.0	302
8113 S / 13 S1 OB	25.395.4353.0	302
8113 S / 13 W OB	25.332.4353.0	298
8113 S / 13 W OB GR OF	99.273.9996.0	299
8113 S / 13 WF OB	25.339.4353.0	299
8113 S / 14 G OB	25.330.4453.0	297
8113 S / 14 GF OB	25.338.4453.0	298
8113 S / 14 S OB GR	25.394.4453.0	302
8113 S / 14 S1 OB	25.395.4453.0	302
8113 S / 14 W OB	25.332.4453.0	298
8113 S / 14 W OB GR OF	99.274.9996.0	299
8113 S / 14 WF OB	25.339.4453.0	299
8113 S / 15 G OB	25.330.4553.0	297
8113 S / 15 G OB GR OF	99.215.9996.0	297
8113 S / 15 GF OB	25.338.4553.0	298
8113 S / 15 S OB GR	25.394.4553.0	302
8113 S / 15 S1 OB	25.395.4553.0	302
8113 S / 15 W OB	25.332.4553.0	298
8113 S / 15 W OB GR OF	99.275.9996.0	299
8113 S / 15 WF OB	25.339.4553.0	299
8113 S / 16 G OB	25.330.4653.0	297
8113 S / 16 G OB GR OF	99.216.9996.0	297
8113 S / 16 GF OB	25.338.4653.0	298
8113 S / 16 S OB GR	25.394.4653.0	302
8113 S / 16 S1 OB	25.395.4653.0	302
8113 S / 16 W OB	25.332.4653.0	298
8113 S / 16 W OB GR OF	99.276.9996.0	299
8113 S E / 2 G OB	25.334.3253.0	303
8113 S E / 2 W OB	25.336.3253.0	303
8113 S E / 3 G OB	25.334.3353.0	303
8113 S E / 3 W OB	25.336.3353.0	303
8113 SEG/ 5/10 G OB	27.334.0553.0	304
8113 SEG/ 5/10 W OB	27.336.0553.0	304
8113 SEG/10/20 G OB	27.334.1053.0	304
8113 SEG/10/20 W OB	27.336.1053.0	304
81195 V/ 3/12 OB	25.154.2353.0	373
8130 / 3 BZ	04.033.0180.0	260
8130 / 4 BZ	04.033.0280.0	260
8130 / 5 BZ	04.033.0380.0	260
8130 / 6 BZ	04.033.0480.0	260
8130 / 12 BZ	04.033.1080.0	260
8130 M BZ	04.033.1180.0	260
8134 / 2	25.500.0253.0	360
8134 / 2 OB	25.501.0253.0	360
8134 / 2 ZN	25.500.6253.0	360
8134 / 2 ZN OB	25.501.6253.0	360
8134 / 3	25.500.0353.0	360
8134 / 3 OB	25.501.0353.0	360
8134 / 3 ZN	25.500.6353.0	360
8134 / 3 ZN OB	25.501.6353.0	360
8134 / 4	25.500.0453.0	360
8134 / 4 OB	25.501.0453.0	360
8134 / 5	25.500.0553.0	360
8134 / 5 OB	25.501.0553.0	360
8134 / 6	25.500.0653.0	360
8134 / 6 OB	25.501.0653.0	360
8134 / 7	25.500.0753.0	360
8134 / 7 OB	25.501.0753.0	360
8134 / 8	25.500.0853.0	360
8134 / 8 OB	25.501.0853.0	360
8134 / 9	25.500.0953.0	360
8134 / 9 OB	25.501.0953.0	360
8134 / 10	25.500.1053.0	360
8134 / 10 OB	25.501.1053.0	360
8134 / 11	25.500.1153.0	360
8134 / 11 OB	25.501.1153.0	360
8134 / 12	25.500.1253.0	360
8134 / 12 OB	25.501.1253.0	360
8134 / 13	25.500.1353.0	360
8134 / 13 OB	25.501.1353.0	360
8134 / 14 OB	25.501.1453.0	360
8134 / 15	25.500.1553.0	360
8134 / 15 OB	25.501.1553.0	360
8134 / 16	25.500.1653.0	360
8134 / 16 OB	25.501.1653.0	360
8135 / 2	25.520.0253.0	362
8135 / 2 OB	25.521.0253.0	362
8135 / 2 ZN	25.520.6253.0	362
8135 / 2 ZN OB	25.521.6253.0	362
8135 / 3	25.520.0353.0	362
8135 / 3 OB	25.521.0353.0	362
8135 / 3 ZN	25.520.6353.0	362
8135 / 3 ZN OB	25.521.6353.0	362
8135 / 4	25.520.0453.0	362
8135 / 4 OB	25.521.0453.0	362
8135 / 5	25.520.0553.0	362
8135 / 5 OB	25.521.0553.0	362
8135 / 6	25.520.0653.0	362
8135 / 6 OB	25.521.0653.0	362
8135 / 7	25.520.0753.0	362
8135 / 7 OB	25.521.0753.0	362
8135 / 8	25.520.0853.0	362
8135 / 8 OB	25.521.0853.0	362
8135 / 9	25.520.0953.0	362
8135 / 9 OB	25.521.0953.0	362
8135 / 10	25.520.1053.0	362
8135 / 10 OB	25.521.1053.0	362
8135 / 11	25.520.1153.0	362
8135 / 11 OB	25.521.1153.0	362
8135 / 12	25.520.1253.0	362
8135 / 12 OB	25.521.1253.0	362
8135 / 13	25.520.1353.0	362
8135 / 13 OB	25.521.1353.0	362
8135 / 14	25.520.1453.0	362
8135 / 14 OB	25.521.1453.0	362
8135 / 15	25.520.1553.0	362
8135 / 15 OB	25.521.1553.0	362
8135 / 16	25.520.1653.0	362
8135 / 16 OB	25.521.1653.0	362
8142 / 9	25.600.2953.0	318
8142 / 2	25.600.2253.0	318
8142 / 2 OB	25.602.2253.0	318
8142 / 3	25.600.2353.0	318
8142 / 3 OB	25.602.2353.0	318
8142 / 4	25.600.2453.0	318
8142 / 4 OB	25.602.2453.0	318
8142 / 4 / 2	25.601.1253.0	318
8142 / 4 / 2 OB	25.603.1253.0	318
8142 / 5	25.600.2553.0	318
8142 / 5 OB	25.602.2553.0	318

contents

Type	Part no.	section / page
8142 / 6	25.600.2653.0	318
8142 / 6 OB	25.602.2653.0	318
8142 / 6 / 3	25.601.1353.0	318
8142 / 6 / 3 OB	25.603.1353.0	318
8142 / 7	25.600.2753.0	318
8142 / 7 OB	25.602.2753.0	318
8142 / 8	25.600.2853.0	318
8142 / 8 OB	25.602.2853.0	318
8142 / 8 / 4	25.601.1453.0	318
8142 / 8 / 4 OB	25.603.1453.0	318
8142 / 9 OB	25.602.2953.0	318
8142 / 10	25.600.3053.0	318
8142 / 10 OB	25.602.3053.0	318
8142 / 10 / 5	25.601.1553.0	318
8142 / 10 / 5 OB	25.603.1553.0	318
8142 / 11	25.600.3153.0	318
8142 / 11 OB	25.602.3153.0	318
8142 / 12	25.600.3253.0	318
8142 / 12 OB	25.602.3253.0	318
8142 / 12 / 6	25.601.1653.0	318
8142 / 12 / 6 OB	25.603.1653.0	318
8142 / 13	25.600.3353.0	318
8142 / 13 OB	25.602.3353.0	318
8142 / 14	25.600.3453.0	318
8142 / 14 OB	25.602.3453.0	318
8142 / 14 / 7	25.601.1753.0	318
8142 / 14 / 7 OB	25.603.1753.0	318
8142 / 15	25.600.3553.0	318
8142 / 15 OB	25.602.3553.0	318
8142 / 16	25.600.3653.0	318
8142 / 16 OB	25.602.3653.0	318
8142 / 16 / 8	25.601.1853.0	318
8142 / 16 / 8 OB	25.603.1853.0	318
8152 / 5 TOP H OB	27.730.0553.0	348
8152 / 5 TOP V OB	27.720.0553.0	348
8152 / 10 TOP H OB	27.730.1053.0	348
8152 / 10 TOP V OB	27.720.1053.0	348
8158 / 2 TOP H OB	25.790.0253.0	353
8158 / 2 TOP V OB	25.780.0253.0	353
8158 / 3 TOP H OB	25.790.0353.0	353
8158 / 3 TOP V OB	25.780.0353.0	353
8158 / 4 TOP H OB	25.790.0453.0	353
8158 / 4 TOP V OB	25.780.0453.0	353
8158 / 5 TOP H OB	25.790.0553.0	353
8158 / 5 TOP V OB	25.780.0553.0	353
8158 / 6 TOP H OB	25.790.0653.0	353
8158 / 6 TOP V OB	25.780.0653.0	353
8158 / 7 TOP H OB	25.790.0753.0	353
8158 / 7 TOP V OB	25.780.0753.0	353
8158 / 8 TOP H OB	25.790.0853.0	353
8158 / 8 TOP V OB	25.780.0853.0	353
8158 / 9 TOP H OB	25.790.0953.0	353
8158 / 9 TOP V OB	25.780.0953.0	353
8158 / 10 TOP H OB	25.790.1053.0	353
8158 / 10 TOP V OB	25.780.1053.0	353
8158 / 11 TOP H OB	25.790.1153.0	353
8158 / 11 TOP V OB	25.780.1153.0	353
8158 / 12 TOP H OB	25.790.1253.0	353
8158 / 12 TOP V OB	25.780.1253.0	353
8158 / 13 TOP H OB	25.790.1353.0	353
8158 / 13 TOP V OB	25.780.1353.0	353
8158 / 14 TOP H OB	25.790.1453.0	353
8158 / 14 TOP V OB	25.780.1453.0	353
8158 / 15 TOP H OB	25.790.1553.0	353
8158 / 15 TOP V OB	25.780.1553.0	353
8158 / 16 TOP H OB	25.790.1653.0	353
8158 / 16 TOP V OB	25.780.1653.0	353
8185 TOP H	25.741.3953.0	350
8185 TOP H	25.741.4153.0	350
8185 TOP H	25.741.4353.0	350
8185 TOP H	25.741.4453.0	350
8185 TOP H	25.741.4553.0	350
8185 TOP V	25.741.1353.0	349
8185 TOP V	25.741.1553.0	349
8185/ 1 TOP H	25.741.0153.0	350
8185/ 1 TOP V	25.741.0053.0	349
8185/ 2 TOP H	25.741.3253.0	350
8185/ 2 TOP V	25.741.0253.0	349
8185/ 3 TOP H	25.741.3353.0	350
8185/ 3 TOP V	25.741.0353.0	349
8185/ 4 TOP H	25.741.3453.0	350
8185/ 4 TOP V	25.741.0453.0	349
8185/ 5 TOP H	25.741.3553.0	350
8185/ 5 TOP V	25.741.0553.0	349
8185/ 6 TOP H	25.741.3653.0	350
8185/ 6 TOP V	25.741.0653.0	349
8185/ 7 TOP H	25.741.3753.0	350
8185/ 7 TOP V	25.741.0753.0	349
8185/ 8 TOP H	25.741.3853.0	350
8185/ 8 TOP V	25.741.0853.0	349
8185/ 9 TOP V	25.741.0953.0	349
8185/ 10 TOP H	25.741.4053.0	350
8185/ 10 TOP V	25.741.1053.0	349
8185/ 11 TOP V	25.741.1153.0	349
8185/ 12 TOP H	25.741.4253.0	350
8185/ 12 TOP V	25.741.1253.0	349
8185/ 14 TOP V	25.741.1453.0	349
8185/ 16 TOP H	25.741.4653.0	350
8185/ 16 TOP V	25.741.1653.0	349
8190 / 2	25.130.0253.0	358
8190 / 2 OB	25.131.0253.0	358
8190 / 3	25.130.0353.0	358
8190 / 3 OB	25.131.0353.0	358
8190 / 4	25.130.0453.0	358
8190 / 4 / 2	25.132.0253.0	358
8190 / 4 / 2 OB	25.133.0253.0	358
8190 / 4 OB	25.131.0453.0	358
8190 / 5	25.130.0553.0	358
8190 / 5 OB	25.131.0553.0	358
8190 / 6	25.130.0653.0	358
8190 / 6 / 3	25.132.0353.0	358
8190 / 6 / 3 OB	25.133.0353.0	358
8190 / 6 OB	25.131.0653.0	358
8190 / 7	25.130.0753.0	358
8190 / 7 OB	25.131.0753.0	358
8190 / 8	25.130.0853.0	358
8190 / 8 / 4	25.132.0453.0	358
8190 / 8 / 4 OB	25.133.0453.0	358
8190 / 8 OB	25.131.0853.0	358
8190 / 9	25.130.0953.0	358
8190 / 9 OB	25.131.0953.0	358
8190 / 10	25.130.1053.0	358
8190 / 10 / 5	25.132.0553.0	358
8190 / 10 / 5 OB	25.133.0553.0	358
8190 / 10 OB	25.131.1053.0	358
8190 / 11	25.130.1153.0	358
8190 / 11 OB	25.131.1153.0	358
8190 / 12	25.130.1253.0	358
8190 / 12 / 6	25.132.0653.0	358
8190 / 12 / 6 OB	25.133.0653.0	358
8190 / 12 OB	25.131.1253.0	358
8190 / 13	25.130.1353.0	358
8190 / 13 OB	25.131.1353.0	358
8190 / 14	25.130.1453.0	358
8190 / 14 / 7	25.132.0753.0	358
8190 / 14 / 7 OB	25.133.0753.0	358
8190 / 14 OB	25.131.1453.0	358
8190 / 15	25.130.1553.0	358
8190 / 15 OB	25.131.1553.0	358
8190 / 16	25.130.1653.0	358
8190 / 16 / 8	25.132.0853.0	358
8190 / 16 / 8 OB	25.133.0853.0	358
8190 / 16 OB	25.131.1653.0	358
8190 / 18 / 9	25.132.0953.0	358
8190 / 18 / 9 OB	25.133.0953.0	358
8190 / 20 / 10	25.132.1053.0	358
8190 / 20 / 10 OB	25.133.1053.0	358
8190 / 22 / 11	25.132.1153.0	358
8190 / 22 / 11 OB	25.133.1153.0	358
8190 / 24 / 12	25.132.1253.0	358
8190 / 24 / 12 OB	25.133.1253.0	358
8190 E / 2 / 4	25.130.3253.0	368
8190 E / 2 / 4 OB	25.131.3253.0	368
8190 E / 3 / 6	25.130.3353.0	368
8190 E / 3 / 6 OB	25.131.3353.0	368
8190 E / 4 / 8	25.130.3453.0	368
8190 E / 4 / 8 OB	25.131.3453.0	368
8190 E / 5 / 10	25.130.3553.0	368
8190 E / 5 / 10 OB	25.131.3553.0	368
8190 E / 6 / 12	25.130.3653.0	368
8190 E / 6 / 12 OB	25.131.3653.0	368
8190 E / 7 / 14	25.130.3753.0	368
8190 E / 7 / 14 OB	25.131.3753.0	368
8190 E / 8 / 16	25.130.3853.0	368
8190 E / 8 / 16 OB	25.131.3853.0	368
8190 E / 9 / 18	25.130.3953.0	368
8190 E / 9 / 18 OB	25.131.3953.0	368
8190 E / 10 / 20	25.130.4053.0	368
8190 E / 10 / 20 OB	25.131.4053.0	368
8190 E / 11 / 22	25.130.4153.0	368
8190 E / 11 / 22 OB	25.131.4153.0	368
8190 E / 12 / 24	25.130.4253.0	368
8190 E / 12 / 24 OB	25.131.4253.0	368
8191 / 2	25.160.0253.0	344
8191 / 2 OB	25.161.0253.0	344
8191 / 2 WVL OB	25.161.2853.0	594
8191 / 2 WVR OB	25.161.2553.0	594
8191 / 2 ZN	25.170.0253.0	344
8191 / 2 ZN OB	25.171.0253.0	344
8191 / 2 ZW	25.160.6253.0	345
8191 / 2 ZW OB	25.161.6253.0	345
8191 / 3	25.160.0353.0	344
8191 / 3 OB	25.161.0353.0	344
8191 / 3 WVL OB	25.161.2953.0	594
8191 / 3 WVR OB	25.161.2653.0	594
8191 / 3 ZN	25.170.0353.0	344
8191 / 3 ZN OB	25.171.0353.0	344
8191 / 3 ZW	25.160.6353.0	345
8191 / 3 ZW OB	25.161.6353.0	345
8191 / 3/ 2	25.168.0253.0	344
8191 / 3/ 2 OB	25.169.0253.0	344
8191 / 3/ 2 Z	25.168.2253.0	345
8191 / 3/ 2 Z OB	25.169.2253.0	345
8191 / 3/ 2 ZN	25.168.6253.0	344
8191 / 3/ 2 ZN OB	25.169.6253.0	344
8191 / 3/ 2 ZW	25.168.4253.0	345
8191 / 3/ 2 ZW OB	25.169.4253.0	345
8191 / 4	25.160.0453.0	344
8191 / 4 OB	25.161.0453.0	344
8191 / 4 ZW	25.160.6453.0	345
8191 / 4 ZW OB	25.161.6453.0	345
8191 / 5	25.160.0553.0	344
8191 / 5 OB	25.161.0553.0	344
8191 / 5 ZW	25.160.6553.0	345
8191 / 5 ZW OB	25.161.6553.0	345
8191 / 5/ 3	25.168.0353.0	344
8191 / 5/ 3 OB	25.169.0353.0	344
8191 / 5/ 3 Z	25.168.2353.0	345
8191 / 5/ 3 Z OB	25.169.2353.0	345
8191 / 5/ 3 ZN	25.168.6353.0	344
8191 / 5/ 3 ZN OB	25.169.6353.0	344
8191 / 5/ 3 ZW	25.168.4353.0	345
8191 / 5/ 3 ZW OB	25.169.4353.0	345
8191 / 6	25.160.0653.0	344
8191 / 6 OB	25.161.0653.0	344
8191 / 6 ZW	25.160.6653.0	345
8191 / 6 ZW OB	25.161.6653.0	345
8191 / 7	25.160.0753.0	344
8191 / 7 OB	25.161.0753.0	344
8191 / 7 ZW	25.160.6753.0	345
8191 / 7 ZW OB	25.161.6753.0	345
8191 / 8	25.160.0853.0	344
8191 / 8 OB	25.161.0853.0	344
8191 / 8 ZW	25.160.6853.0	345
8191 / 8 ZW OB	25.161.6853.0	345
8191 / 9	25.160.0953.0	344
8191 / 9 OB	25.161.0953.0	344
8191 / 9 ZW	25.160.6953.0	345
8191 / 9 ZW OB	25.161.6953.0	345
8191 / 10	25.160.1053.0	344
8191 / 10 OB	25.161.1053.0	344
8191 / 10 ZW	25.160.7053.0	345
8191 / 10 ZW OB	25.161.7053.0	345
8191 / 11	25.160.1153.0	344
8191 / 11 OB	25.161.1153.0	344
8191 / 11 ZW	25.160.7153.0	345
8191 / 11 ZW OB	25.161.7153.0	345
8191 / 12	25.160.1253.0	344
8191 / 12 OB	25.161.1253.0	344
8191 / 12 ZW	25.160.7253.0	345
8191 / 12 ZW OB	25.161.7253.0	345
8191 / 13	25.160.1353.0	344
8191 / 13 OB	25.161.1353.0	344
8191 / 13 ZW	25.160.7353.0	345
8191 / 13 ZW OB	25.161.7353.0	345
8191 / 14	25.160.1453.0	344
8191 / 14 OB	25.161.1453.0	344
8191 / 14 ZW	25.160.7453.0	345
8191 / 14 ZW OB	25.161.7453.0	345
8191 / 15	25.160.1553.0	344
8191 / 15 OB	25.161.1553.0	344
8191 / 15 ZW	25.160.7553.0	345
8191 / 15 ZW OB	25.161.7553.0	345
8191 / 16	25.160.1653.0	344
8191 / 16 OB	25.161.1653.0	344
8191 / 16 ZW	25.160.7653.0	345
8191 / 16 ZW OB	25.161.7653.0	345
8191 D / 2 / 6	25.180.0253.0	370
8191 D / 2 / 6 OB	25.180.5253.0	370
8191 D / 2 / 6 ZN	25.180.4253.0	370
8191 D / 2 / 6 ZN OB	25.180.9253.0	370
8191 D / 3 / 9	25.180.0353.0	370
8191 D / 3 / 9 OB	25.180.5353.0	370
8191 D / 3 / 9 ZN	25.180.4353.0	370
8191 D / 3 / 9 ZN OB	25.180.9353.0	370
8191 D / 4 / 12	25.180.0453.0	370
8191 D / 4 / 12 OB	25.180.5453.0	370
8191 D / 5 / 15	25.180.0553.0	370
8191 D / 5 / 15 OB	25.180.5553.0	370
8191 D / 6 / 18	25.180.0653.0	370
8191 D / 6 / 18 OB	25.180.5653.0	370
8191 D / 7 / 21	25.180.0753.0	370
8191 D / 7 / 21 OB	25.180.5753.0	370
8191 D / 8 / 24	25.180.0853.0	370
8191 D / 8 / 24 OB	25.180.5853.0	370
8191 D / 9 / 27 OB	25.180.5953.0	370
8191 D / 10 / 30	25.180.1053.0	370
8191 D / 10 / 30 OB	25.180.6053.0	370
8191 D / 11 / 33	25.180.1153.0	370
8191 D / 11 / 33 OB	25.180.6153.0	370
8191 D / 12 / 36	25.180.1253.0	370
8191 D / 12 / 36 OB	25.180.6253.0	370
8191 E / 2 / 4	25.178.0253.0	366
8191 E / 2 / 4 OB	25.178.5253.0	366
8191 E / 2 / 4 ZN	25.178.4253.0	366
8191 E / 2 / 4 ZN OB	25.178.9253.0	366
8191 E / 3 / 6	25.178.0353.0	366
8191 E / 3 / 6 OB	25.178.5353.0	366
8191 E / 3 / 6 ZN	25.178.4353.0	366
8191 E / 3 / 6 ZN OB	25.178.9353.0	366
8191 E / 4 / 8	25.178.0453.0	366
8191 E / 4 / 8 OB	25.178.5453.0	366
8191 E / 5 / 10	25.178.0553.0	366
8191 E / 5 / 10 OB	25.178.5553.0	366
8191 E / 6 / 12	25.178.0653.0	366
8191 E / 6 / 12 OB	25.178.5653.0	366
8191 E / 7 / 14	25.178.0753.0	366
8191 E / 7 / 14 OB	25.178.5753.0	366
8191 E / 8 / 16	25.178.0853.0	366
8191 E / 8 / 16 OB	25.178.5853.0	366
8191 E / 9 / 18	25.178.0953.0	366
8191 E / 9 / 18 OB	25.178.5953.0	366
8191 E / 10 / 20	25.178.1053.0	366
8191 E / 10 / 20 OB	25.178.6053.0	366
8191 E / 11 / 22	25.178.1153.0	366
8191 E / 11 / 22 OB	25.178.6153.0	366
8191 E / 12 / 24	25.178.1253.0	366
8191 E / 12 / 24 OB	25.178.6253.0	366
8191 R / 2 Z	25.155.2253.0	342
8191 R / 2 Z OB	25.155.0253.0	342
8191 R / 3 Z	25.155.2353.0	342
8191 R / 3 Z OB	25.155.0353.0	342
8191 R / 3/ 2 Z	25.157.1253.0	343
8191 R / 3/ 2 Z OB	25.157.0253.0	343
8191 R / 4 Z	25.155.2453.0	342
8191 R / 4 Z OB	25.155.0453.0	342
8191 R / 5 Z	25.155.2553.0	342
8191 R / 5 Z OB	25.155.0553.0	342
8191 R / 5/ 3 Z	25.157.1353.0	343
8191 R / 5/ 3 Z OB	25.157.0353.0	343
8191 R / 6 Z	25.155.2653.0	342

contents of type description

contents TYPE

Type	Part no.	section / page
8191 R / 6 Z OB	25.155.0653.0	342
8191 R / 7 Z	25.155.2753.0	342
8191 R / 7 Z OB	25.155.0753.0	342
8191 R / 7/ 4 Z	25.157.1453.0	343
8191 R / 7/ 4 Z OB	25.157.0453.0	343
8191 R / 8 Z	25.155.2853.0	342
8191 R / 8 Z OB	25.155.0853.0	342
8191 R / 9 Z	25.155.2953.0	342
8191 R / 9 Z OB	25.155.0953.0	342
8191 R / 9/ 5 Z	25.157.1553.0	343
8191 R / 9/ 5 Z OB	25.157.0553.0	343
8191 R / 10 Z	25.155.3053.0	342
8191 R / 10 Z OB	25.155.1053.0	342
8191 R / 11 Z	25.155.3153.0	342
8191 R / 11 Z OB	25.155.1153.0	342
8191 R / 11/ 6 Z	25.157.1653.0	343
8191 R / 11/ 6 Z OB	25.157.0653.0	343
8191 R / 12 Z	25.155.3253.0	342
8191 R / 12 Z OB	25.155.1253.0	342
8191 R / 13 Z	25.155.3353.0	342
8191 R / 13 Z OB	25.155.1353.0	342
8191 R / 13/ 7 Z	25.157.1753.0	343
8191 R / 13/ 7 Z OB	25.157.0753.0	343
8191 R / 14 Z	25.155.3453.0	342
8191 R / 14 Z OB	25.155.1453.0	342
8192 / 2	25.190.0253.0	338
8192 / 2 OB	25.191.0253.0	338
8192 / 2 ZN	25.190.9253.0	338
8192 / 2 ZN OB	25.191.9253.0	338
8192 / 2 ZW OB	25.191.6253.0	339
8192 / 3	25.190.0353.0	338
8192 / 3 OB	25.191.0353.0	338
8192 / 3 ZN	25.190.9353.0	338
8192 / 3 ZN OB	25.191.9353.0	338
8192 / 3 ZW OB	25.191.6353.0	339
8192 / 4	25.190.0453.0	338
8192 / 4 OB	25.191.0453.0	338
8192 / 4 ZW OB	25.191.6453.0	339
8192 / 5	25.190.0553.0	338
8192 / 5 OB	25.191.0553.0	338
8192 / 5 ZW OB	25.191.6553.0	339
8192 / 6	25.190.0653.0	338
8192 / 6 OB	25.191.0653.0	338
8192 / 6 ZW OB	25.191.6653.0	339
8192 / 7	25.190.0753.0	338
8192 / 7 OB	25.191.0753.0	338
8192 / 7 ZW OB	25.191.6753.0	339
8192 / 8	25.190.0853.0	338
8192 / 8 OB	25.191.0853.0	338
8192 / 8 ZW OB	25.191.6853.0	339
8192 / 9	25.190.0953.0	338
8192 / 9 OB	25.191.0953.0	338
8192 / 9 ZW OB	25.191.6953.0	339
8192 / 10	25.190.1053.0	338
8192 / 10 OB	25.191.1053.0	338
8192 / 10 ZW OB	25.191.7053.0	339
8192 / 11	25.190.1153.0	338
8192 / 11 OB	25.191.1153.0	338
8192 / 11 ZW OB	25.191.7153.0	339
8192 / 12	25.190.1253.0	338
8192 / 12 OB	25.191.1253.0	338
8192 / 12 ZW OB	25.191.7253.0	339
8192 / 13	25.190.1353.0	338
8192 / 13 OB	25.191.1353.0	338
8192 / 13 ZW OB	25.191.7353.0	339
8192 / 14	25.190.1453.0	338
8192 / 14 OB	25.191.1453.0	338
8192 / 14 ZW OB	25.191.7453.0	339
8192 / 15	25.190.1553.0	338
8192 / 15 OB	25.191.1553.0	338
8192 / 15 ZW OB	25.191.7553.0	339
8192 / 16	25.190.1653.0	338
8192 / 16 OB	25.191.1653.0	338
8192 / 16 ZW OB	25.191.7653.0	339
8192 E / 12 / 24 OB	25.198.6253.0	364
8192 E / 2 / 4	25.198.0253.0	364
8192 E / 2 / 4 OB	25.198.5253.0	364
8192 E / 2 / 4 ZN	25.198.4253.0	364
8192 E / 2 / 4 ZN OB	25.198.9253.0	364
8192 E / 3 / 6	25.198.0353.0	364
8192 E / 3 / 6 OB	25.198.5353.0	364
8192 E / 3 / 6 ZN	25.198.4353.0	364
8192 E / 3 / 6 ZN OB	25.198.9353.0	364
8192 E / 4 / 8	25.198.0453.0	364
8192 E / 4 / 8 OB	25.198.5453.0	364
8192 E / 5 / 10	25.198.0553.0	364
8192 E / 5 / 10 OB	25.198.5553.0	364
8192 E / 6 / 12	25.198.0653.0	364
8192 E / 6 / 12 OB	25.198.5653.0	364
8192 E / 7 / 14	25.198.0753.0	364
8192 E / 7 / 14 OB	25.198.5753.0	364
8192 E / 8 / 16	25.198.0853.0	364
8192 E / 8 / 16 OB	25.198.5853.0	364
8192 E / 9 / 18	25.198.0953.0	364
8192 E / 9 / 18 OB	25.198.5953.0	364
8192 E / 10 / 20	25.198.1053.0	364
8192 E / 10 / 20 OB	25.198.6053.0	364
8192 E / 11 / 22	25.198.1153.0	364
8192 E / 11 / 22 OB	25.198.6153.0	364
8192 E / 12 / 24	25.198.1253.0	364
8195 D/ 2/ 6	25.153.0253.0	372
8195 D/ 2/ 6 OB	25.153.2253.0	372
8195 D/ 2/ 6 VB1	25.153.4253.0	372
8195 D/ 2/ 6 VB1 OB	25.153.6253.0	372
8195 D/ 3/ 9	25.153.0353.0	372
8195 D/ 3/ 9 OB	25.153.2353.0	372
8195 D/ 3/ 9 VB1	25.153.4353.0	372
8195 D/ 3/ 9 VB1 OB	25.153.6353.0	372
8195 D/ 4/12	25.153.0453.0	372
8195 D/ 4/12 OB	25.153.2453.0	372
8195 D/ 4/12 VB1	25.153.4453.0	372
8195 D/ 4/12 VB1 OB	25.153.6453.0	372
8195 D/ 5/15	25.153.0553.0	372
8195 D/ 5/15 OB	25.153.2553.0	372
8195 D/ 5/15 VB1	25.153.4553.0	372
8195 D/ 5/15 VB1 OB	25.153.6553.0	372
8195 D/ 6/18	25.153.0653.0	372
8195 D/ 6/18 OB	25.153.2653.0	372
8195 D/ 6/18 VB1	25.153.4653.0	372
8195 D/ 6/18 VB1 OB	25.153.6653.0	372
8195 D/ 7/21	25.153.0753.0	372
8195 D/ 7/21 OB	25.153.2753.0	372
8195 D/ 7/21 VB1	25.153.4753.0	372
8195 D/ 7/21 VB1 OB	25.153.6753.0	372
8195 D/ 8/24	25.153.0853.0	372
8195 D/ 8/24 OB	25.153.2853.0	372
8195 D/ 8/24 VB1	25.153.4853.0	372
8195 D/ 8/24 VB1 OB	25.153.6853.0	372
8195 D/ 9/27	25.153.0953.0	372
8195 D/ 9/27 OB	25.153.2953.0	372
8195 D/ 9/27 VB1	25.153.4953.0	372
8195 D/ 9/27 VB1 OB	25.153.6953.0	372
8195 D/ 10/30	25.153.1053.0	372
8195 D/ 10/30 OB	25.153.3053.0	372
8195 D/ 10/30 VB1	25.153.5053.0	372
8195 D/ 10/30 VB1 OB	25.153.7053.0	372
8195 V/ 2/ 8	25.154.0253.0	373
8195 V/ 2/ 8 OB	25.154.2253.0	373
8195 V/ 2/ 8 VB1	25.154.4253.0	373
8195 V/ 2/ 8 VB1 OB	25.154.6253.0	373
8195 v/ 3/12	25.154.0353.0	373
8195 V/ 3/12 VB1	25.154.4353.0	373
8195 V/ 3/12 VB1 OB	25.154.6353.0	373
8195 V/ 4/16	25.154.0453.0	373
8195 V/ 4/16 OB	25.154.2453.0	373
8195 V/ 4/16 VB1	25.154.4453.0	373
8195 V/ 4/16 VB1 OB	25.154.6453.0	373
8195 V/ 5/20	25.154.0553.0	373
8195 V/ 5/20 OB	25.154.2553.0	373
8195 V/ 5/20 VB1	25.154.4553.0	373
8195 V/ 5/20 VB1 OB	25.154.6553.0	373
8195 V/ 6/24	25.154.0653.0	373
8195 V/ 6/24 OB	25.154.2653.0	373
8195 V/ 6/24 VB1	25.154.4653.0	373
8195 V/ 6/24 VB1 OB	25.154.6653.0	373
8195 V/ 7/28	25.154.0753.0	373
8195 V/ 7/28 OB	25.154.2753.0	373
8195 V/ 7/28 VB1	25.154.4753.0	373
8195 V/ 7/28 VP1 OB	25.154.6753.0	373
8195 V/ 8/32	25.154.0853.0	373
8195 V/ 8/32 OB	25.154.2853.0	373
8195 V/ 8/32 VB1	25.154.4853.0	373
8195 V/ 8/32 VB1 OB	25.154.6853.0	373
8195 V/ 9/36	25.154.0953.0	373
8195 V/ 9/36 OB	25.154.2953.0	373
8195 V/ 9/36 VB1	25.154.4953.0	373
8195 V/ 9/36 VB1 OB	25.154.6953.0	373
8195 V/ 10/40	25.154.1053.0	373
8195 V/ 10/40 OB	25.154.3053.0	373
8195 V/ 10/40 VB1	25.154.5053.0	373
8213 B / 2	25.340.0253.0	286
8213 B / 2 F	25.323.0253.0	286
8213 B / 2 F OB	25.323.3253.0	286
8213 B / 2 OB	25.340.3253.0	286
8213 B / 2 TOP	25.240.0253.0	296
8213 B / 2 TOP OB	25.240.3253.0	296
8213 B / 2 VL	25.346.0253.0	289
8213 B / 2 VL OB	25.346.3253.0	289
8213 B / 2 VR	25.345.0253.0	289
8213 B / 2 VR OB	25.345.3253.0	289
8213 B / 3	25.340.0353.0	286
8213 B / 3 F	25.323.0353.0	286
8213 B / 3 F OB	25.323.3353.0	286
8213 B / 3 OB	25.340.3353.0	286
8213 B / 3 TOP	25.240.0353.0	296
8213 B / 3 TOP OB	25.240.3353.0	296
8213 B / 3 VL	25.346.0353.0	289
8213 B / 3 VL OB	25.346.3353.0	289
8213 B / 3 VR	25.345.0353.0	289
8213 B / 3 VR OB	25.345.3353.0	289
8213 B / 4	25.340.0453.0	286
8213 B / 4 F	25.323.0453.0	286
8213 B / 4 F OB	25.323.3453.0	286
8213 B / 4 OB	25.340.3453.0	286
8213 B / 4 TOP	25.240.0453.0	296
8213 B / 4 TOP OB	25.240.3453.0	296
8213 B / 4 VL	25.346.0453.0	289
8213 B / 4 VL OB	25.346.3453.0	289
8213 B / 4 VR	25.345.0453.0	289
8213 B / 4 VR OB	25.345.3453.0	289
8213 B / 5	25.340.0553.0	286
8213 B / 5 F	25.323.0553.0	286
8213 B / 5 F OB	25.323.3553.0	286
8213 B / 5 F OB GOLD	25.323.3501.0	411
8213 B / 5 OB	25.340.3553.0	286
8213 B / 5 S OB	27.341.3553.0	287
8213 B / 5 TOP	25.240.0553.0	296
8213 B / 5 TOP OB	25.240.3553.0	296
8213 B / 5 VL	25.346.0553.0	289
8213 B / 5 VL OB	25.346.3553.0	289
8213 B / 5 VR	25.345.0553.0	289
8213 B / 5 VR OB	25.345.3553.0	289
8213 B / 6	25.340.0653.0	286
8213 B / 6 F	25.323.0653.0	286
8213 B / 6 F OB	25.323.3653.0	286
8213 B / 6 OB	25.340.3653.0	286
8213 B / 6 TOP	25.240.0653.0	296
8213 B / 6 TOP OB	25.240.3653.0	296
8213 B / 6 VL	25.346.0653.0	289
8213 B / 6 VL OB	25.346.3653.0	289
8213 B / 6 VR	25.345.0653.0	289
8213 B / 6 VR OB	25.345.3653.0	289
8213 B / 7	25.340.0753.0	286
8213 B / 7 F	25.323.0753.0	286
8213 B / 7 F OB	25.323.3753.0	286
8213 B / 7 OB	25.340.3753.0	286
8213 B / 7 TOP	25.240.0753.0	296
8213 B / 7 TOP OB	25.240.3753.0	296
8213 B / 7 VL	25.346.0753.0	289
8213 B / 7 VL OB	25.346.3753.0	289
8213 B / 7 VR	25.345.0753.0	289
8213 B / 7 VR OB	25.345.3753.0	289
8213 B / 8	25.340.0853.0	286
8213 B / 8 F	25.323.0853.0	286
8213 B / 8 F OB	25.323.3853.0	286
8213 B / 8 OB	25.340.3853.0	286
8213 B / 8 TOP	25.240.0853.0	296
8213 B / 8 TOP OB	25.240.3853.0	296
8213 B / 8 VL	25.346.0853.0	289
8213 B / 8 VL OB	25.346.3853.0	289
8213 B / 8 VR	25.345.0853.0	289
8213 B / 8 VR OB	25.345.3853.0	289
8213 B / 9	25.340.0953.0	286
8213 B / 9 F	25.323.0953.0	286
8213 B / 9 F OB	25.323.3953.0	286
8213 B / 9 OB	25.340.3953.0	286
8213 B / 9 TOP	25.240.0953.0	296
8213 B / 9 TOP OB	25.240.3953.0	296
8213 B / 9 VL	25.346.0953.0	289
8213 B / 9 VL OB	25.346.3953.0	289
8213 B / 9 VR	25.345.0953.0	289
8213 B / 9 VR OB	25.345.3953.0	289
8213 B / 10	25.340.1053.0	286
8213 B / 10 F	25.323.1053.0	286
8213 B / 10 F OB	25.323.4053.0	286
8213 B / 10 OB	25.340.4053.0	286
8213 B / 10 S OB	27.341.4053.0	287
8213 B / 10 TOP	25.240.1053.0	296
8213 B / 10 TOP OB	25.240.4053.0	296
8213 B / 10 VL	25.346.1053.0	289
8213 B / 10 VL OB	25.346.4053.0	289
8213 B / 10 VR	25.345.1053.0	289
8213 B / 10 VR OB	25.345.4053.0	289
8213 B / 11	25.340.1153.0	286
8213 B / 11 F	25.323.1153.0	286
8213 B / 11 F OB	25.323.4153.0	286
8213 B / 11 OB	25.340.4153.0	286
8213 B / 11 TOP	25.240.1153.0	296
8213 B / 11 TOP OB	25.240.4153.0	296
8213 B / 11 VL	25.346.1153.0	289
8213 B / 11 VL OB	25.346.4153.0	289
8213 B / 11 VR	25.345.1153.0	289
8213 B / 11 VR OB	25.345.4153.0	289
8213 B / 12	25.340.1253.0	286
8213 B / 12 F	25.323.1253.0	286
8213 B / 12 F OB	25.323.4253.0	286
8213 B / 12 OB	25.340.4253.0	286
8213 B / 12 TOP	25.240.1253.0	296
8213 B / 12 TOP OB	25.240.4253.0	296
8213 B / 12 VL	25.346.1253.0	289
8213 B / 12 VL OB	25.346.4253.0	289
8213 B / 12 VR	25.345.1253.0	289
8213 B / 12 VR OB	25.345.4253.0	289
8213 B / 13	25.340.1353.0	286
8213 B / 13 F	25.323.1353.0	286
8213 B / 13 F OB	25.323.4353.0	286
8213 B / 13 OB	25.340.4353.0	286
8213 B / 13 TOP	25.240.1353.0	296
8213 B / 13 TOP OB	25.240.4353.0	296
8213 B / 13 VL	25.346.1353.0	289
8213 B / 13 VL OB	25.346.4353.0	289
8213 B / 13 VR	25.345.1353.0	289
8213 B / 13 VR OB	25.345.4353.0	289
8213 B / 14	25.340.1453.0	286
8213 B / 14 F	25.323.1453.0	286
8213 B / 14 F OB	25.323.4453.0	286
8213 B / 14 OB	25.340.4453.0	286
8213 B / 14 TOP	25.240.1453.0	296
8213 B / 14 TOP OB	25.240.4453.0	296
8213 B / 14 VL	25.346.1453.0	289
8213 B / 14 VL OB	25.346.4453.0	289
8213 B / 14 VR	25.345.1453.0	289
8213 B / 14 VR OB	25.345.4453.0	289
8213 B / 15	25.340.1553.0	286
8213 B / 15 F	25.323.1553.0	286
8213 B / 15 F OB	25.323.4553.0	286
8213 B / 15 OB	25.340.4553.0	286
8213 B / 15 TOP	25.240.1553.0	296
8213 B / 15 TOP OB	25.240.4553.0	296
8213 B / 15 VL	25.346.1553.0	289
8213 B / 15 VL OB	25.346.4553.0	289
8213 B / 15 VR	25.345.1553.0	289
8213 B / 15 VR OB	25.345.4553.0	289
8213 B / 16	25.340.1653.0	286
8213 B / 16 F	25.323.1653.0	286
8213 B / 16 F OB	25.323.4653.0	286
8213 B / 16 OB	25.340.4653.0	286
8213 B / 16 TOP	25.240.1653.0	296
8213 B / 16 TOP OB	25.240.4653.0	296
8213 B / 16 VL	25.346.1653.0	289
8213 B / 16 VL OB	25.346.4653.0	289

contents

Type	Part no.	section / page
8213 B / 16 VR	25.345.1653.0	289
8213 B / 16 VR OB	25.345.4653.0	289
8213 BFK / 2 TOP K	25.840.0253.0	292
8213 BFK / 2 TOP K OB	25.840.3253.0	292
8213 BFK / 3 TOP K	25.840.0353.0	292
8213 BFK / 3 TOP K OB	25.840.3353.0	292
8213 BFK / 4 TOP K	25.840.0453.0	292
8213 BFK / 5 TOP K	25.840.0553.0	292
8213 BFK / 5 TOP K OB	25.840.3553.0	292
8213 BFK / 6 TOP K	25.840.0653.0	292
8213 BFK / 6 TOP K OB	25.840.3653.0	292
8213 BFK / 7 TOP K	25.840.0753.0	292
8213 BFK / 7 TOP K OB	25.840.3753.0	292
8213 BFK / 8 TOP K	25.840.0853.0	292
8213 BFK / 8 TOP K OB	25.840.3853.0	292
8213 BFK / 9 TOP K	25.840.0953.0	292
8213 BFK / 9 TOP K OB	25.840.3953.0	292
8213 BFK /10 TOP K	25.840.1053.0	292
8213 BFK /10 TOP K OB	25.840.4053.0	292
8213 BFK /11 TOP K	25.840.1153.0	292
8213 BFK /11 TOP K OB	25.840.4153.0	292
8213 BFK /12 TOP K	25.840.1253.0	292
8213 BFK /12 TOP K OB	25.840.4253.0	292
8213 BFK /13 TOP K	25.840.1353.0	292
8213 BFK /13 TOP K OB	25.840.4353.0	292
8213 BFK /14 TOP K	25.840.1453.0	292
8213 BFK /14 TOP K OB	25.840.4453.0	292
8213 BFK /15 TOP K	25.840.1553.0	292
8213 BFK /15 TOP K OB	25.840.4553.0	292
8213 BFK /16 TOP K	25.840.1653.0	292
8213 BFK /16 TOP K OB	25.840.4653.0	292
8213 BFK/12 TOP K F	25.841.1253.0	292
8213 BL / 2 G	25.342.0253.0	295
8213 BL / 2 G OB	25.342.3253.0	295
8213 BL / 2 W	25.343.0253.0	295
8213 BL / 2 W OB	25.343.3253.0	295
8213 BL / 3 G	25.342.0353.0	295
8213 BL / 3 G OB	25.342.3353.0	295
8213 BL / 3 W	25.343.0353.0	295
8213 BL / 3 W OB	25.343.3353.0	295
8213 BL / 4 G	25.342.0453.0	295
8213 BL / 4 G OB	25.342.3453.0	295
8213 BL / 4 W	25.343.0453.0	295
8213 BL / 4 W OB	25.343.3453.0	295
8213 BL / 5 G	25.342.0553.0	295
8213 BL / 5 G OB	25.342.3553.0	295
8213 BL / 5 W	25.343.0553.0	295
8213 BL / 5 W OB	25.343.3553.0	295
8213 BL / 6 G	25.342.0653.0	295
8213 BL / 6 G OB	25.342.3653.0	295
8213 BL / 6 W	25.343.0653.0	295
8213 BL / 6 W OB	25.343.3653.0	295
8213 BL / 7 G	25.342.0753.0	295
8213 BL / 7 G OB	25.342.3753.0	295
8213 BL / 7 W	25.343.0753.0	295
8213 BL / 7 W OB	25.343.3753.0	295
8213 BL / 8 G	25.342.0853.0	295
8213 BL / 8 G OB	25.342.3853.0	295
8213 BL / 8 W	25.343.0853.0	295
8213 BL / 8 W OB	25.343.3853.0	295
8213 BL / 9 G	25.342.0953.0	295
8213 BL / 9 W	25.343.0953.0	295
8213 BL / 9W OB	25.343.3953.0	295
8213 BL / 10 G	25.342.1053.0	295
8213 BL / 10 G OB	25.342.4053.0	295
8213 BL / 10 W	25.343.1053.0	295
8213 BL / 10 W OB	25.343.4053.0	295
8213 BL / 11 G	25.342.1153.0	295
8213 BL / 11 G OB	25.342.4153.0	295
8213 BL / 11 W	25.343.1153.0	295
8213 BL / 11 W OB	25.343.4153.0	295
8213 BL / 12 G	25.342.1253.0	295
8213 BL / 12 G OB	25.342.4253.0	295
8213 BL / 12 W	25.343.1253.0	295
8213 BL / 12 W OB	25.343.4253.0	295
8213 BL / 13 G	25.342.1353.0	295
8213 BL / 13 G OB	25.342.4353.0	295
8213 BL / 13 W	25.343.1353.0	295
8213 BL / 13 W OB	25.343.4353.0	295
8213 BL / 14 G	25.342.1453.0	295
8213 BL / 14 G OB	25.342.4453.0	295
8213 BL / 14 W	25.343.1453.0	295
8213 BL / 14 W OB	25.343.4453.0	295
8213 BL / 15 G	25.342.1553.0	295
8213 BL / 15 G OB	25.342.4553.0	295
8213 BL / 15 W	25.343.1553.0	295
8213 BL / 15 W OB	25.343.4553.0	295
8213 BL / 16 G	25.342.1653.0	295
8213 BL / 16 G OB	25.342.4653.0	295
8213 BL / 16 W	25.343.1653.0	295
8213 BL / 16 W OB	25.343.4653.0	295
8213 S 2 DFWW	25.303.0253.0	305
8213 S / 2 DFLS	25.303.3253.0	305
8213 S / 2 DFLS M	25.313.3253.0	305
8213 S / 2 DFWW M	25.313.0253.0	305
8213 S / 2 G OB	25.350.3253.0	297
8213 S / 2 G OB GR OF	99.232.9996.1	297
8213 S / 2 GF OB	25.359.3253.0	298
8213 S / 2 S OB GR	25.396.3253.0	302
8213 S / 2 S1 OB GR	25.397.3253.0	302
8213 S / 2 W OB	25.352.3253.0	298
8213 S / 2 W OB GR OF	99.202.9996.2	299
8213 S / 2 WF OB	25.358.3253.0	299
8213 S / 3 DFLS	25.303.3353.0	305
8213 S / 3 DFLS M	25.313.3353.0	305
8213 S / 3 DFWW	25.303.0353.0	305
8213 S / 3 DFWW M	25.313.0353.0	305
8213 S / 3 G OB	25.350.3353.0	297
8213 S / 3 G OB GR OF	99.233.9996.1	297
8213 S / 3 GF OB	25.359.3353.0	298
8213 S / 3 S OB GR	25.396.3353.0	302
8213 S / 3 S1 OB GR	25.397.3353.0	302
8213 S / 3 W OB	25.352.3353.0	298
8213 S / 3 W OB GR OF	99.203.9996.2	299
8213 S / 3 WF OB	25.358.3353.0	299
8213 S / 4 DFLS	25.303.3453.0	305
8213 S / 4 DFLS M	25.313.3453.0	305
8213 S / 4 DFWW	25.303.0453.0	305
8213 S / 4 DFWW M	25.313.0453.0	305
8213 S / 4 G OB	25.350.3453.0	297
8213 S / 4 G OB GR OF	99.234.9996.1	297
8213 S / 4 GF OB	25.359.3453.0	298
8213 S / 4 S OB GR	25.396.3453.0	302
8213 S / 4 S1 OB GR	25.397.3453.0	302
8213 S / 4 W OB	25.352.3453.0	298
8213 S / 4 W OB GR OF	99.204.9996.2	299
8213 S / 4 WF OB	25.358.3453.0	299
8213 S / 5 DFLS	25.303.3553.0	305
8213 S / 5 DFLS M	25.313.3553.0	305
8213 S / 5 DFWW	25.303.0553.0	305
8213 S / 5 DFWW M	25.313.0553.0	305
8213 S / 5 G OB	25.350.3553.0	297
8213 S / 5 G OB GR OF	99.235.9996.1	297
8213 S / 5 GF OB	25.359.3553.0	298
8213 S / 5 S OB GR	25.396.3553.0	302
8213 S / 5 S1 OB GR	25.397.3553.0	302
8213 S / 5 W OB	25.352.3553.0	298
8213 S / 5 W OB GR OF	99.205.9996.2	299
8213 S / 5 WF OB	25.358.3553.0	299
8213 S / 6 DFLS	25.303.3653.0	305
8213 S / 6 DFLS M	25.313.3653.0	305
8213 S / 6 DFWW	25.303.0653.0	305
8213 S / 6 DFWW M	25.313.0653.0	305
8213 S / 6 G OB	25.350.3653.0	297
8213 S / 6 G OB GR OF	99.236.9996.1	297
8213 S / 6 GF OB	25.359.3653.0	298
8213 S / 6 S OB GR	25.396.3653.0	302
8213 S / 6 S1 OB GR	25.397.3653.0	302
8213 S / 6 W OB	25.352.3653.0	298
8213 S / 6 W OB GR OF	99.206.9996.2	299
8213 S / 6 WF OB	25.358.3653.0	299
8213 S / 7 DFLS	25.303.3753.0	305
8213 S / 7 DFLS M	25.313.3753.0	305
8213 S / 7 DFWW	25.303.0753.0	305
8213 S / 7 DFWW M	25.313.0753.0	305
8213 S / 7 G OB	25.350.3753.0	297
8213 S / 7 G OB GR OF	99.237.9996.1	297
8213 S / 7 GF OB	25.359.3753.0	298
8213 S / 7 S OB GR	25.396.3753.0	302
8213 S / 7 S1 OB GR	25.397.3753.0	302
8213 S / 7 W OB	25.352.3753.0	298
8213 S / 7 W OB GR OF	99.207.9996.2	299
8213 S / 7 WF OB	25.358.3753.0	299
8213 S / 8 DFLS	25.303.3853.0	305
8213 S / 8 DFLS M	25.313.3853.0	305
8213 S / 8 DFWW	25.303.0853.0	305
8213 S / 8 DFWW M	25.313.0853.0	305
8213 S / 8 G OB	25.350.3853.0	297
8213 S / 8 G OB GR OF	99.238.9996.1	297
8213 S / 8 GF OB	25.359.3853.0	298
8213 S / 8 S OB GR	25.396.3853.0	302
8213 S / 8 S1 OB GR	25.397.3853.0	302
8213 S / 8 W OB	25.352.3853.0	298
8213 S / 8 W OB GR OF	99.208.9996.2	299
8213 S / 8 WF OB	25.358.3853.0	299
8213 S / 9 DFLS	25.303.3953.0	305
8213 S / 9 DFLS M	25.313.3953.0	305
8213 S / 9 DFWW	25.303.0953.0	305
8213 S / 9 DFWW M	25.313.0953.0	305
8213 S / 9 G OB	25.350.3953.0	297
8213 S / 9 GF OB	25.359.3953.0	298
8213 S / 9 S OB GR	25.396.3953.0	302
8213 S / 9 S1 OB GR	25.397.3953.0	302
8213 S / 9 W OB	25.352.3953.0	298
8213 S / 9 W OB GR OF	99.209.9996.2	299
8213 S / 9 WF OB	25.358.3953.0	299
8213 S / 10 DFLS	25.303.4053.0	305
8213 S / 10 DFLS M	25.313.4053.0	305
8213 S / 10 DFWW	25.303.1053.0	305
8213 S / 10 DFWW M	25.313.1053.0	305
8213 S / 10 G OB	25.350.4053.0	297
8213 S / 10 G OB GR OF	99.240.9996.1	297
8213 S / 10 GF OB	25.359.4053.0	298
8213 S / 10 S OB GR	25.396.4053.0	302
8213 S / 10 S1 OB GR	25.397.4053.0	302
8213 S / 10 W OB	25.352.4053.0	298
8213 S / 10 W OB GR OF	99.210.9996.2	299
8213 S / 10 WF OB	25.358.4053.0	299
8213 S / 11 DFLS	25.303.4153.0	305
8213 S / 11 DFLS M	25.313.4153.0	305
8213 S / 11 DFWW	25.303.1153.0	305
8213 S / 11 DFWW M	25.313.1153.0	305
8213 S / 11 G OB	25.350.4153.0	297
8213 S / 11 G OB GR OF	99.241.9996.1	297
8213 S / 11 GF OB	25.359.4153.0	298
8213 S / 11 S OB GR	25.396.4153.0	302
8213 S / 11 S1 OB GR	25.397.4153.0	302
8213 S / 11 W OB	25.352.4153.0	298
8213 S / 11 W OB GR OF	99.211.9996.2	299
8213 S / 11 WF OB	25.358.4153.0	299
8213 S / 12 DFLS	25.303.4253.0	305
8213 S / 12 DFLS M	25.313.4253.0	305
8213 S / 12 DFWW	25.303.1253.0	305
8213 S / 12 DFWW M	25.313.1253.0	305
8213 S / 12 G OB	25.350.4253.0	297
8213 S / 12 G OB GR OF	99.242.9996.1	297
8213 S / 12 GF OB	25.359.4253.0	298
8213 S / 12 S OB GR	25.396.4253.0	302
8213 S / 12 S1 OB GR	25.397.4253.0	302
8213 S / 12 W OB	25.352.4253.0	298
8213 S / 12 W OB GR OF	99.212.9996.2	299
8213 S / 12 WF OB	25.358.4253.0	299
8213 S / 13 DFLS	25.303.4353.0	305
8213 S / 13 DFLS M	25.313.4353.0	305
8213 S / 13 DFWW	25.303.1353.0	305
8213 S / 13 DFWW M	25.313.1353.0	305
8213 S / 13 G OB	25.350.4353.0	297
8213 S / 13 G OB GR OF	99.243.9996.1	297
8213 S / 13 GF OB	25.359.4353.0	298
8213 S / 13 S OB GR	25.396.4353.0	302
8213 S / 13 S1 OB GR	25.397.4353.0	302
8213 S / 13 W OB	25.352.4353.0	298
8213 S / 13 W OB GR OF	99.213.9996.2	299
8213 S / 13 WF OB	25.358.4353.0	299
8213 S / 14 DFLS	25.303.4453.0	305
8213 S / 14 DFLS M	25.313.4453.0	305
8213 s / 14 DFWW	25.303.1453.0	305
8213 S / 14 DFWW M	25.313.1453.0	305
8213 S / 14 G OB	25.350.4453.0	297
8213 S / 14 G OB GR OF	99.244.9996.1	297
8213 S / 14 GF OB	25.359.4453.0	298
8213 S / 14 S OB GR	25.396.4453.0	302
8213 S / 14 S1 OB GR	25.397.4453.0	302
8213 S / 14 W OB	25.352.4453.0	298
8213 S / 14 W OB GR OF	99.214.9996.2	299
8213 S / 14 WF OB	25.358.4453.0	299
8213 S / 15 DFLS	25.303.4553.0	305
8213 S / 15 DFLS M	25.313.4553.0	305
8213 S / 15 DFWW	25.303.1553.0	305
8213 S / 15 DFWW M	25.313.1553.0	305
8213 S / 15 G OB	25.350.4553.0	297
8213 S / 15 G OB GR OF	99.245.9996.1	297
8213 S / 15 GF OB	25.359.4553.0	298
8213 S / 15 S OB GR	25.396.4553.0	302
8213 S / 15 S1 OB GR	25.397.4553.0	302
8213 S / 15 W OB	25.352.4553.0	298
8213 S / 15 W OB GR OF	99.215.9996.2	299
8213 S / 15 WF OB	25.358.4553.0	299
8213 S / 16 DFLS	25.303.4653.0	305
8213 S / 16 DFLS M	25.313.4653.0	305
8213 S / 16 DFWW	25.303.1653.0	305
8213 S / 16 DFWW M	25.313.1653.0	305
8213 S / 16 G OB	25.350.4653.0	297
8213 S / 16 G OB GR OF	99.246.9996.1	297
8213 S / 16 GF OB	25.359.4653.0	298
8213 S / 16 S OB GR	25.396.4653.0	302
8213 S / 16 S1 OB GR	25.397.4653.0	302
8213 S / 16 W OB	25.352.4653.0	298
8213 S / 16 W OB GR OF	99.216.9996.2	299
8213 S / 16 WF OB	25.358.4653.0	299
8213 S / 9 G OB GR OF	99.239.9996.1	297
8213 S E / 2 G OB	25.354.3253.0	303
8213 S E / 2 W OB	25.356.3253.0	303
8213 S E / 3 G OB	25.354.3353.0	303
8213 S E / 3 W OB	25.356.3353.0	303
8213 SEG/ 5/10 G OB	27.354.0553.0	304
8213 SEG/ 5/10 W OB	27.356.0553.0	304
8213 SEG/10/20 G OB	27.354.1053.0	304
8213 SEG/10/20 W OB	27.356.1053.0	304
8213 SUFK/ 2 TOP	25.857.0253.0	293
8213 SUFK/ 2 TOP OB	25.857.3253.0	293
8213 SUFK/ 3 TOP	25.857.0353.0	293
8213 SUFK/ 3 TOP OB	25.857.3353.0	293
8213 SUFK/ 4 TOP	25.857.0453.0	293
8213 SUFK/ 4 TOP OB	25.857.3453.0	293
8213 SUFK/ 5 TOP	25.857.0553.0	293
8213 SUFK/ 5 TOP OB	25.857.3553.0	293
8213 SUFK/ 6 TOP	25.857.0653.0	293
8213 SUFK/ 6 TOP OB	25.857.3653.0	293
8213 SUFK/ 7 TOP	25.857.0753.0	293
8213 SUFK/ 7 TOP OB	25.857.3753.0	293
8213 SUFK/ 8 TOP	25.857.0853.0	293
8213 SUFK/ 8 TOP OB	25.857.3853.0	293
8213 SUFK/ 9 TOP	25.857.0953.0	293
8213 SUFK/ 9 TOP OB	25.857.3953.0	293
8213 SUFK/10 TOP	25.857.1053.0	293
8213 SUFK/10 TOP OB	25.857.4053.0	293
8213 SUFK/11 TOP	25.857.1153.0	293
8213 SUFK/11 TOP OB	25.857.4153.0	293
8213 SUFK/12 TOP	25.857.1253.0	293
8213 SUFK/12 TOP OB	25.857.4253.0	293
8213 SUFK/13 TOP	25.857.1353.0	293
8213 SUFK/13 TOP OB	25.857.4353.0	293
8213 SUFK/14 TOP	25.857.1453.0	293
8213 SUFK/14 TOP OB	25.857.4453.0	293
8213 SUFK/15 TOP	25.857.1553.0	293
8213 SUFK/15 TOP OB	25.857.4553.0	293
8213 SUFK/16 TOP	25.857.1653.0	293
8213 SUFK/16 TOP OB	25.857.4653.0	293
8213BL / 9 G OB	25.342.3953.0	295
8234 / 11	25.502.1153.0	360
8234 / 13	25.502.1353.0	360
8234 / 15	25.502.1553.0	360
8234 / 16	25.502.1653.0	360
8234 / 2	25.502.0253.0	360
8234 / 2 OB	25.503.0253.0	360
8234 / 2 ZN	25.502.6253.0	360
8234 / 2 ZN OB	25.503.6253.0	360
8234 / 3	25.502.0353.0	360
8234 / 3 OB	25.503.0353.0	360
8234 / 3 ZN	25.502.6353.0	360

contents of type description

contents TYPE

Type	Part no.	section / page
8234 / 3 ZN OB	25.503.6353.0	360
8234 / 4	25.502.0453.0	360
8234 / 4 OB	25.503.0453.0	360
8234 / 5	25.502.0553.0	360
8234 / 5 OB	25.503.0553.0	360
8234 / 6	25.502.0653.0	360
8234 / 6 OB	25.503.0653.0	360
8234 / 7	25.502.0753.0	360
8234 / 7 OB	25.503.0753.0	360
8234 / 8	25.502.0853.0	360
8234 / 8 OB	25.503.0853.0	360
8234 / 9	25.502.0953.0	360
8234 / 9 OB	25.503.0953.0	360
8234 / 10	25.502.1053.0	360
8234 / 10 OB	25.503.1053.0	360
8234 / 11 OB	25.503.1153.0	360
8234 / 12	25.502.1253.0	360
8234 / 12 OB	25.503.1253.0	360
8234 / 13 OB	25.503.1353.0	360
8234 / 14	25.502.1453.0	360
8234 / 14 OB	25.503.1453.0	360
8234 / 15 OB	25.503.1553.0	360
8234 / 16 OB	25.503.1653.0	360
8235 / 2	25.522.0253.0	362
8235 / 2 OB	25.523.0253.0	362
8235 / 2 ZN	25.522.6253.0	362
8235 / 2 ZN OB	25.523.6253.0	362
8235 / 3	25.522.0353.0	362
8235 / 3 OB	25.523.0353.0	362
8235 / 3 ZN	25.522.6353.0	362
8235 / 3 ZN OB	25.523.6353.0	362
8235 / 4	25.522.0453.0	362
8235 / 4 OB	25.523.0453.0	362
8235 / 5	25.522.0553.0	362
8235 / 5 OB	25.523.0553.0	362
8235 / 6	25.522.0653.0	362
8235 / 6 OB	25.523.0653.0	362
8235 / 7	25.522.0753.0	362
8235 / 7 OB	25.523.0753.0	362
8235 / 8	25.522.0853.0	362
8235 / 8 OB	25.523.0853.0	362
8235 / 9	25.522.0953.0	362
8235 / 9 OB	25.523.0953.0	362
8235 / 10	25.522.1053.0	362
8235 / 10 OB	25.523.1053.0	362
8235 / 11	25.522.1153.0	362
8235 / 11 OB	25.523.1153.0	362
8235 / 12	25.522.1253.0	362
8235 / 12 OB	25.523.1253.0	362
8235 / 13	25.522.1353.0	362
8235 / 13 OB	25.523.1353.0	362
8235 / 14	25.522.1453.0	362
8235 / 14 OB	25.523.1453.0	362
8235 / 15	25.522.1553.0	362
8235 / 15 OB	25.523.1553.0	362
8235 / 16	25.522.1653.0	362
8235 / 16 OB	25.523.1653.0	362
8258 / 2 TOP H OB	25.791.0253.0	353
8258 / 2 TOP V OB	25.781.0253.0	353
8258 / 3 TOP H OB	25.791.0353.0	353
8258 / 3 TOP V OB	25.781.0353.0	353
8258 / 4 TOP H OB	25.791.0453.0	353
8258 / 4 TOP V OB	25.781.0453.0	353
8258 / 5 TOP H OB	25.791.0553.0	353
8258 / 6 TOP H OB	25.791.0653.0	353
8258 / 7 TOP H OB	25.791.0753.0	353
8258 / 7 TOP V OB	25.781.0753.0	353
8258 / 8 TOP H OB	25.791.0853.0	353
8258 / 8 TOP V OB	25.781.0853.0	353
8258 / 9 TOP H OB	25.791.0953.0	353
8258 / 9 TOP V OB	25.781.0953.0	353
8258 / 10 TOP H OB	25.791.1053.0	353
8258 / 10 TOP V OB	25.781.1053.0	353
8258 / 11 TOP H OB	25.791.1153.0	353
8258 / 11 TOP V OB	25.781.1153.0	353
8258 / 12 TOP H OB	25.791.1253.0	353
8258 / 12 TOP V OB	25.781.1253.0	353
8258 / 13 TOP H OB	25.791.1353.0	353
8258 / 13 TOP V OB	25.781.1353.0	353
8258 / 14 TOP H OB	25.791.1453.0	353
8258 / 14 TOP V OB	25.781.1453.0	353
8258 / 15 TOP H OB	25.791.1553.0	353
8258 / 15 TOP V OB	25.781.1553.0	353
8258 / 16 TOP H OB	25.791.1653.0	353
8258 / 16 TOP V OB	25.781.1653.0	353
8258 / 5 TOP V OB	25.781.0553.0	353
8258 / 6 TOP V OB	25.781.0653.0	353
8276	25.720.1353.0	378
8276 TKS	25.720.1453.0	378
8285 TOP H	25.751.3753.0	350
8285 TOP H	25.751.3853.0	350
8285 TOP H	25.751.3953.0	350
8285 TOP H	25.751.4153.0	350
8285 TOP H	25.751.4253.0	350
8285 TOP H	25.751.4353.0	350
8285 TOP H	25.751.4453.0	350
8285 TOP H	25.751.4553.0	350
8285 TOP V	25.751.0753.0	349
8285 TOP V	25.751.0953.0	349
8285 TOP V	25.751.1153.0	349
8285 TOP V	25.751.1353.0	349
8285 TOP V	25.751.1453.0	349
8285 TOP V	25.751.1653.0	349
8285/ 1 TOP H	25.751.0153.0	350
8285/ 1 TOP V	25.751.0053.0	349
8285/ 2 TOP H	25.751.3253.0	350
8285/ 2 TOP V	25.751.0253.0	349
8285/ 3 TOP H	25.751.3353.0	350
8285/ 3 TOP V	25.751.0353.0	349
8285/ 4 TOP H	25.751.3453.0	350
8285/ 4 TOP V	25.751.0453.0	349
8285/ 5 TOP H	25.751.3553.0	350
8285/ 5 TOP V	25.751.0553.0	349
8285/ 6 TOP H	25.751.3653.0	350
8285/ 6 TOP V	25.751.0653.0	349
8285/ 8 TOP V	25.751.0853.0	349
8285/ 10 TOP H	25.751.4053.0	350
8285/ 10 TOP V	25.751.1053.0	349
8285/ 12 TOP V	25.751.1253.0	349
8285/ 15 TOP V	25.751.1553.0	349
8285/ 16 TOP H	25.751.4653.0	350
8291 / 2	25.162.0253.0	344
8291 / 2 OB	25.163.0253.0	344
8291 / 2 ZN	25.172.0253.0	344
8291 / 2 ZN OB	25.173.0253.0	344
8291 / 2 ZW	25.162.6253.0	345
8291 / 2 ZW OB	25.163.6253.0	345
8291 / 3	25.162.0353.0	344
8291 / 3 OB	25.163.0353.0	344
8291 / 3 ZN	25.172.0353.0	344
8291 / 3 ZN OB	25.173.0353.0	344
8291 / 3 ZW	25.162.6353.0	345
8291 / 3 ZW OB	25.163.6353.0	345
8291 / 4	25.162.0453.0	344
8291 / 4 OB	25.163.0453.0	344
8291 / 4 ZW	25.162.6453.0	345
8291 / 4 ZW OB	25.163.6453.0	345
8291 / 5	25.162.0553.0	344
8291 / 5 OB	25.163.0553.0	344
8291 / 5 ZW	25.162.6553.0	345
8291 / 5 ZW OB	25.163.6553.0	345
8291 / 6	25.162.0653.0	344
8291 / 6 OB	25.163.0653.0	344
8291 / 6 ZW	25.162.6653.0	345
8291 / 6 ZW OB	25.163.6653.0	345
8291 / 7	25.162.0753.0	344
8291 / 7 OB	25.163.0753.0	344
8291 / 7 ZW	25.162.6753.0	345
8291 / 7 ZW OB	25.163.6753.0	345
8291 / 8	25.162.0853.0	344
8291 / 8 OB	25.163.0853.0	344
8291 / 8 ZW	25.162.6853.0	345
8291 / 8 ZW OB	25.163.6853.0	345
8291 / 9	25.162.0953.0	344
8291 / 9 OB	25.163.0953.0	344
8291 / 9 ZW	25.162.6953.0	345
8291 / 9 ZW OB	25.163.6953.0	345
8291 / 10	25.162.1053.0	344
8291 / 10 OB	25.163.1053.0	344
8291 / 10 ZW	25.162.7053.0	345
8291 / 10 ZW OB	25.163.7053.0	345
8291 / 11	25.162.1153.0	344
8291 / 11 OB	25.163.1153.0	344
8291 / 11 ZW	25.162.7153.0	345
8291 / 11 ZW OB	25.163.7153.0	345
8291 / 12	25.162.1253.0	344
8291 / 12 OB	25.163.1253.0	344
8291 / 12 ZW	25.162.7253.0	345
8291 / 12 ZW OB	25.163.7253.0	345
8291 / 13	25.162.1353.0	344
8291 / 13 OB	25.163.1353.0	344
8291 / 13 ZW OB	25.163.7353.0	345
8291 / 14	25.162.1453.0	344
8291 / 14 OB	25.163.1453.0	344
8291 / 14 ZW	25.162.7453.0	345
8291 / 14 ZW OB	25.163.7453.0	345
8291 / 15	25.162.1553.0	344
8291 / 15 OB	25.163.1553.0	344
8291 / 15 ZW	25.162.7553.0	345
8291 / 15 ZW OB	25.163.7553.0	345
8291 / 16	25.162.1653.0	344
8291 / 16 OB	25.163.1653.0	344
8291 / 16 ZW	25.162.7653.0	345
8291 / 16 ZW OB	25.163.7653.0	345
8291 D / 2 / 6	25.181.0253.0	370
8291 D / 2 / 6 OB	25.181.5253.0	370
8291 D / 2 / 6 ZN	25.181.4253.0	370
8291 D / 2 / 6 ZN OB	25.181.9253.0	370
8291 D / 3 / 9	25.181.0353.0	370
8291 D / 3 / 9 OB	25.181.5353.0	370
8291 D / 3 / 9 ZN	25.181.4353.0	370
8291 D / 3 / 9 ZN OB	25.181.9353.0	370
8291 D / 4 / 12	25.181.0453.0	370
8291 D / 4 / 12 OB	25.181.5453.0	370
8291 D / 5 / 15	25.181.0553.0	370
8291 D / 5 / 15 OB	25.181.5553.0	370
8291 D / 6 / 18	25.181.0653.0	370
8291 D / 6 / 18 OB	25.181.5653.0	370
8291 D / 7 / 21	25.181.0753.0	370
8291 D / 7 / 21 OB	25.181.5753.0	370
8291 D / 8 / 24	25.181.0853.0	370
8291 D / 8 / 24 OB	25.181.5853.0	370
8291 D / 9 / 27	25.181.0953.0	370
8291 D / 9 / 27 OB	25.181.5953.0	370
8291 D / 10 / 30	25.181.1053.0	370
8291 D / 10 / 30 OB	25.181.6053.0	370
8291 D / 11 / 33	25.181.1153.0	370
8291 D / 11 / 33 OB	25.181.6153.0	370
8291 D / 12 / 36	25.181.1253.0	370
8291 D / 12 / 36 OB	25.181.6253.0	370
8291 E / 2 / 4	25.179.0253.0	366
8291 E / 2 / 4 OB	25.179.5253.0	366
8291 E / 2 / 4 ZN	25.179.4253.0	366
8291 E / 2 / 4 ZN OB	25.179.9253.0	366
8291 E / 3 / 6	25.179.0353.0	366
8291 E / 3 / 6 OB	25.179.5353.0	366
8291 E / 3 / 6 ZN	25.179.4353.0	366
8291 E / 3 / 6 ZN OB	25.179.9353.0	366
8291 E / 4 / 8	25.179.0453.0	366
8291 E / 4 / 8 OB	25.179.5453.0	366
8291 E / 5 / 10	25.179.0553.0	366
8291 E / 5 / 10 OB	25.179.5553.0	366
8291 E / 6 / 12	25.179.0653.0	366
8291 E / 6 / 12 OB	25.179.5653.0	366
8291 E / 7 / 12	25.179.0753.0	366
8291 E / 7 / 14 OB	25.179.5753.0	366
8291 E / 8 / 16	25.179.0853.0	366
8291 E / 9 / 18	25.179.0953.0	366
8291 E / 10 / 20	25.179.1053.0	366
8291 E / 10 / 20 OB	25.179.6053.0	366
8291 E / 11 / 22	25.179.1153.0	366
8291 E / 11 / 22 OB	25.179.6153.0	366
8291 E / 12 / 24	25.179.1253.0	366
8291 E / 12 / 24 OB	25.179.6253.0	366
8291 E/ 8 / 16 OB	25.179.5853.0	366
8291 E/ 9 / 18 OB	25.179.5953.0	366
8291 R / 2 Z	25.156.2253.0	342
8291 R / 2 Z OB	25.156.0253.0	342
8291 R / 3 Z	25.156.2353.0	342
8291 R / 3 Z OB	25.156.0353.0	342
8291 R / 3/ 2 Z	25.157.5253.0	343
8291 R / 3/ 2 Z OB	25.157.4253.0	343
8291 R / 4 Z	25.156.2453.0	342
8291 R / 5 Z	25.156.2553.0	342
8291 R / 5 Z OB	25.156.0553.0	342
8291 R / 5/ 3 Z	25.157.5353.0	343
8291 R / 5/ 3 Z OB	25.157.4353.0	343
8291 R / 6 Z	25.156.2653.0	342
8291 R / 6 Z OB	25.156.0653.0	342
8291 R / 7 Z	25.156.2753.0	342
8291 R / 7 Z OB	25.156.0753.0	342
8291 R / 7/ 4 Z	25.157.5453.0	343
8291 R / 7/ 4 Z OB	25.157.4453.0	343
8291 R / 8 Z	25.156.2853.0	342
8291 R / 8 Z OB	25.156.0853.0	342
8291 R / 9 Z	25.156.2953.0	342
8291 R / 9 Z OB	25.156.0953.0	342
8291 R / 9/ 5 Z	25.157.5553.0	343
8291 R / 9/ 5 Z OB	25.157.4553.0	343
8291 R / 10 Z	25.156.3053.0	342
8291 R / 10 Z OB	25.156.1053.0	342
8291 R / 11 Z	25.156.3153.0	342
8291 R / 11 Z OB	25.156.1153.0	342
8291 R / 11/ 6 Z	25.157.5653.0	343
8291 R / 11/ 6 Z OB	25.157.4653.0	343
8291 R / 12 Z	25.156.3253.0	342
8291 R / 12 Z OB	25.156.1253.0	342
8291 R / 13 Z	25.156.3353.0	342
8291 R / 13 Z OB	25.156.1353.0	342
8291 R / 13/ 7 Z	25.157.5753.0	343
8291 R / 14 Z	25.156.3453.0	342
8291 R / 14 Z OB	25.156.1453.0	342
8291 R/ 4 Z OB	25.156.0453.0	342
8291R / 13/ 7 Z OB	25.157.4753.0	343
8292 / 2	25.192.0253.0	338
8292 / 2 OB	25.193.0253.0	338
8292 / 2 ZN	25.192.9253.0	338
8292 / 2 ZN OB	25.193.9253.0	338
8292 / 2 ZW OB	25.193.6253.0	339
8292 / 3	25.192.0353.0	338
8292 / 3 OB	25.193.0353.0	338
8292 / 3 ZN	25.192.9353.0	338
8292 / 3 ZN OB	25.193.9353.0	338
8292 / 3 ZW OB	25.193.6353.0	339
8292 / 4	25.192.0453.0	338
8292 / 4 OB	25.193.0453.0	338
8292 / 4 ZW OB	25.193.6453.0	339
8292 / 5	25.192.0553.0	338
8292 / 5 OB	25.193.0553.0	338
8292 / 5 ZW OB	25.193.6553.0	339
8292 / 6	25.192.0653.0	338
8292 / 6 OB	25.193.0653.0	338
8292 / 6 ZW OB	25.193.6653.0	339
8292 / 7	25.192.0753.0	338
8292 / 7 OB	25.193.0753.0	338
8292 / 7 ZW OB	25.193.6753.0	339
8292 / 8	25.192.0853.0	338
8292 / 8 .OB	25.193.0853.0	338
8292 / 8 ZW OB	25.193.6853.0	339
8292 / 9	25.192.0953.0	338
8292 / 9 OB	25.193.0953.0	338
8292 / 9 ZW OB	25.193.6953.0	339
8292 / 10	25.192.1053.0	338
8292 / 10 OB	25.193.1053.0	338
8292 / 10 ZW OB	25.193.7053.0	339
8292 / 11	25.192.1153.0	338
8292 / 11 OB	25.193.1153.0	338
8292 / 11 ZW OB	25.193.7153.0	339
8292 / 12	25.192.1253.0	338
8292 / 12 OB	25.193.1253.0	338
8292 / 12 ZW OB	25.193.7253.0	339
8292 / 13	25.192.1353.0	338
8292 / 13 OB	25.193.1353.0	338
8292 / 13 ZW OB	25.193.7353.0	339
8292 / 14	25.192.1453.0	338
8292 / 14 OB	25.193.1453.0	338
8292 / 14 ZW OB	25.193.7453.0	339
8292 / 15	25.192.1553.0	338
8292 / 15 OB	25.193.1553.0	338
8292 / 15 ZW OB	25.193.7553.0	339
8292 / 16	25.192.1653.0	338

contents

Type	Part no.	section / page
8292 / 16 OB	25.193.1653.0	338
8292 / 16 ZW OB	25.193.7653.0	339
8292 DH / 2 OB	27.000.4253.0	340
8292 DH / 3 OB	27.000.4353.0	340
8292 E / 2 / 4	25.199.0253.0	364
8292 E / 2 / 4 OB	25.199.5253.0	364
8292 E / 2 / 4 ZN	25.199.4253.0	364
8292 E / 2 / 4 ZN OB	25.199.9253.0	364
8292 E / 3 / 6	25.199.0353.0	364
8292 E / 3 / 6 OB	25.199.5353.0	364
8292 E / 3 / 6 ZN	25.199.4353.0	364
8292 E / 3 / 6 ZN OB	25.199.9353.0	364
8292 E / 4 / 8	25.199.0453.0	364
8292 E / 4 / 8 OB	25.199.5453.0	364
8292 E / 5 / 10	25.199.0553.0	364
8292 E / 5 / 10 OB	25.199.5553.0	364
8292 E / 6 / 12	25.199.0653.0	364
8292 E / 6 / 12 OB	25.199.5653.0	364
8292 E / 7 / 14	25.199.0753.0	364
8292 E / 7 / 14 OB	25.199.5753.0	364
8292 E / 8 / 16	25.199.0853.0	364
8292 E / 8 / 16 OB	25.199.5853.0	364
8292 E / 9 / 18	25.199.0953.0	364
8292 E / 9 / 18 OB	25.199.5953.0	364
8292 E / 10 / 20	25.199.1053.0	364
8292 E / 10 / 20 OB	25.199.6053.0	364
8292 E / 11 / 22	25.199.1153.0	364
8292 E / 11 / 22 OB	25.199.6153.0	364
8292 E / 12 / 24	25.199.1253.0	364
8292 E / 12 / 24 OB	25.199.6253.0	364
8292 EH / 2 OB	27.000.2253.0	340
8292 EH / 3 OB	27.000.2353.0	340
8292 H / 2 OB	27.000.0253.0	341
8292 H / 3 OB	27.000.0353.0	341
8313 B / 2	25.360.0253.0	288
8313 B / 2 F	25.324.0253.0	288
8313 B / 2 F OB	25.324.2253.0	288
8313 B / 2 OB	25.360.3253.0	288
8313 B / 3	25.360.0353.0	288
8313 B / 3 F	25.324.0353.0	288
8313 B / 3 F OB	25.324.2353.0	288
8313 B / 3 OB	25.360.3353.0	288
8313 B / 4	25.360.0453.0	288
8313 B / 4 F	25.324.0453.0	288
8313 B / 4 F OB	25.324.2453.0	288
8313 B / 4 OB	25.360.3453.0	288
8313 B / 5	25.360.0553.0	288
8313 B / 5 F	25.324.0553.0	288
8313 B / 5 F OB	25.324.2553.0	288
8313 B / 5 OB	25.360.3553.0	288
8313 B / 6	25.360.0653.0	288
8313 B / 6 F	25.324.0653.0	288
8313 B / 6 F OB	25.324.2653.0	288
8313 B / 6 OB	25.360.3653.0	288
8313 B / 7	25.360.0753.0	288
8313 B / 7 F	25.324.0753.0	288
8313 B / 7 F OB	25.324.2753.0	288
8313 B / 7 OB	25.360.3753.0	288
8313 B / 8	25.360.0853.0	288
8313 B / 8 F	25.324.0853.0	288
8313 B / 8 F OB	25.324.2853.0	288
8313 B / 8 OB	25.360.3853.0	288
8313 B / 9	25.360.0953.0	288
8313 B / 9 F	25.324.0953.0	288
8313 B / 9 F OB	25.324.2953.0	288
8313 B / 9 OB	25.360.3953.0	288
8313 B / 10	25.360.1053.0	288
8313 B / 10 F	25.324.1053.0	288
8313 B / 10 F OB	25.324.3053.0	288
8313 B / 10 OB	25.360.4053.0	288
8313 B / 11	25.360.1153.0	288
8313 B / 11 F	25.324.1153.0	288
8313 B / 11 F OB	25.324.3153.0	288
8313 B / 11 OB	25.360.4153.0	288
8313 B / 12	25.360.1253.0	288
8313 B / 12 F	25.324.1253.0	288
8313 B / 12 F OB	25.324.3253.0	288
8313 B / 12 OB	25.360.4253.0	288
8313 S / 2 G OB	25.370.3253.0	300
8313 S / 2 GF OB	25.374.6253.0	300
8313 S / 2 W OB	25.372.3253.0	301
8313 S / 2 WF OB	25.374.2253.0	301
8313 S / 3 G OB	25.370.3353.0	300
8313 S / 3 GF OB	25.374.6353.0	300
8313 S / 3 W OB	25.372.3353.0	301
8313 S / 3 WF OB	25.374.2353.0	301
8313 S / 4 G OB	25.370.3453.0	300
8313 S / 4 GF OB	25.374.6453.0	300
8313 S / 4 W OB	25.372.3453.0	301
8313 S / 4 WF OB	25.374.2453.0	301
8313 S / 5 G OB	25.370.3553.0	300
8313 S / 5 GF OB	25.374.6553.0	300
8313 S / 5 W OB	25.372.3553.0	301
8313 S / 5 WF OB	25.374.2553.0	301
8313 S / 6 G OB	25.370.3653.0	300
8313 S / 6 GF OB	25.374.6653.0	300
8313 S / 6 W OB	25.372.3653.0	301
8313 S / 6 WF OB	25.374.2653.0	301
8313 S / 7 G OB	25.370.3753.0	300
8313 S / 7 GF OB	25.374.6753.0	300
8313 S / 7 W OB	25.372.3753.0	301
8313 S / 7 WF OB	25.374.2753.0	301
8313 S / 8 G OB	25.370.3853.0	300
8313 S / 8 GF OB	25.374.6853.0	300
8313 S / 8 W OB	25.372.3853.0	301
8313 S / 8 WF OB	25.374.2853.0	301
8313 S / 9 G OB	25.370.3953.0	300
8313 S / 9 GF OB	25.374.6953.0	300
8313 S / 9 W OB	25.372.3953.0	301
8313 S / 9 WF OB	25.374.2953.0	301
8313 S / 10 G OB	25.370.4053.0	300
8313 S / 10 GF OB	25.374.7053.0	300
8313 S / 10 W OB	25.372.4053.0	301
8313 S / 10 WF OB	25.374.3053.0	301
8313 S / 11 G OB	25.370.4153.0	300
8313 S / 11 GF OB	25.374.7153.0	300
8313 S / 11 W OB	25.372.4153.0	301
8313 S / 11 WF OB	25.374.3153.0	301
8313 S / 12 G OB	25.370.4253.0	300
8313 S / 12 GF OB	25.374.7253.0	300
8313 S / 12 W OB	25.372.4253.0	301
8313 S / 12 WF OB	25.374.3253.0	301
8358 / 2 TOP H OB	25.792.0253.0	354
8358 / 2 TOP V OB	25.782.0253.0	354
8358 / 3 TOP H OB	25.792.0353.0	354
8358 / 3 TOP V OB	25.782.0353.0	354
8358 / 4 TOP H OB	25.792.0453.0	354
8358 / 4 TOP V OB	25.782.0453.0	354
8358 / 5 TOP H OB	25.792.0553.0	354
8358 / 5 TOP V OB	25.782.0553.0	354
8358 / 6 TOP H OB	25.792.0653.0	354
8358 / 6 TOP V OB	25.782.0653.0	354
8358 / 7 TOP H OB	25.792.0753.0	354
8358 / 7 TOP V OB	25.782.0753.0	354
8358 / 8 TOP H OB	25.792.0853.0	354
8358 / 8 TOP V OB	25.782.0853.0	354
8358 / 9 TOP H OB	25.792.0953.0	354
8358 / 9 TOP V OB	25.782.0953.0	354
8358 / 10 TOP H OB	25.792.1053.0	354
8358 / 10 TOP V OB	25.782.1053.0	354
8358 / 11 TOP H OB	25.792.1153.0	354
8358 / 11 TOP V OB	25.782.1153.0	354
8358 / 12 TOP H OB	25.792.1253.0	354
8358 / 12 TOP V OB	25.782.1253.0	354
8358 / 13 TOP H OB	25.792.1353.0	354
8358 / 13 TOP V OB	25.782.1353.0	354
8358 / 14 TOP H OB	25.792.1453.0	354
8358 / 14 TOP V OB	25.782.1453.0	354
8358 / 15 TOP H OB	25.792.1553.0	354
8358 / 15 TOP V OB	25.782.1553.0	354
8358 / 16 TOP H OB	25.792.1653.0	354
8358 / 16 TOP V OB	25.782.1653.0	354
8375/ 1/ 7,5	25.700.0153.0	374
8385 TOP H	25.761.3253.0	352
8385 TOP H	25.761.3453.0	352
8385 TOP H	25.761.3553.0	352
8385 TOP H	25.761.3653.0	352
8385 TOP H	25.761.3753.0	352
8385 TOP H	25.761.3853.0	352
8385 TOP V	25.761.0453.0	351
8385 TOP V	25.761.0553.0	351
8385 TOP V	25.761.0753.0	351
8385 TOP V	25.761.0853.0	351
8385/ 1 TOP H	25.761.0153.0	352
8385/ 1 TOP V	25.761.0053.0	351
8385/ 2 TOP V	25.761.0253.0	351
8385/ 3 TOP H	25.761.3353.0	352
8385/ 3 TOP V	25.761.0353.0	351
8385/ 6 TOP V	25.761.0653.0	351
8390 / 2	25.150.0253.0	359
8390 / 2 OB	25.151.0253.0	359
8390 / 3	25.150.0353.0	359
8390 / 3 OB	25.151.0353.0	359
8390 / 4	25.150.0453.0	359
8390 / 4 OB	25.151.0453.0	359
8390 / 5	25.150.0553.0	359
8390 / 5 OB	25.151.0553.0	359
8390 / 6	25.150.0653.0	359
8390 / 6 OB	25.151.0653.0	359
8390 / 7	25.150.0753.0	359
8390 / 7 OB	25.151.0753.0	359
8390 / 8	25.150.0853.0	359
8390 / 8 OB	25.151.0853.0	359
8390 / 9	25.150.0953.0	359
8390 / 9 OB	25.151.0953.0	359
8390 / 10	25.150.1053.0	359
8390 / 10 OB	25.151.1053.0	359
8390 / 11	25.150.1153.0	359
8390 / 11 OB	25.151.1153.0	359
8390 / 12	25.150.1253.0	359
8390 / 12 OB	25.151.1253.0	359
8391 / 2	25.164.0253.0	346
8391 / 2 OB	25.165.0253.0	346
8391 / 2 Z	25.164.3253.0	347
8391 / 2 Z OB	25.165.3253.0	346
8391 / 2 ZN	25.174.0253.0	347
8391 / 2 ZN OB	25.175.0253.0	346
8391 / 2 ZW	25.164.6253.0	347
8391 / 2 ZW OB	25.165.6253.0	347
8391 / 3	25.164.0353.0	346
8391 / 3 OB	25.165.0353.0	346
8391 / 3 Z	25.164.3353.0	347
8391 / 3 Z OB	25.165.3353.0	346
8391 / 3 ZN	25.174.0353.0	347
8391 / 3 ZN OB	25.175.0353.0	346
8391 / 3 ZW	25.164.6353.0	347
8391 / 3 ZW OB	25.165.6353.0	347
8413 B / 2	25.380.0253.0	288
8413 B / 2 F	25.324.4253.0	288
8413 B / 2 F OB	25.324.6253.0	288
8413 B / 2 OB	25.380.3253.0	288
8413 B / 2 VL	25.386.0253.0	290
8413 B / 2 VL OB	25.386.2253.0	290
8413 B / 2 VR	25.385.0253.0	290
8413 B / 2 VR OB	25.385.2253.0	290
8413 B / 3	25.380.0353.0	288
8413 B / 3 F	25.324.4353.0	288
8413 B / 3 F OB	25.324.6353.0	288
8413 B / 3 OB	25.380.3353.0	288
8413 B / 3 VL	25.386.0353.0	290
8413 B / 3 VL OB	25.386.2353.0	290
8413 B / 3 VR	25.385.0353.0	290
8413 B / 3 VR OB	25.385.2353.0	290
8413 B / 4	25.380.0453.0	288
8413 B / 4 F	25.324.4453.0	288
8413 B / 4 F OB	25.324.6453.0	288
8413 B / 4 OB	25.380.3453.0	288
8413 B / 4 VL	25.386.0453.0	290
8413 B / 4 VL OB	25.386.2453.0	290
8413 B / 4 VR	25.385.0453.0	290
8413 B / 4 VR OB	25.385.2453.0	290
8413 B / 5	25.380.0553.0	288
8413 B / 5 F	25.324.4553.0	288
8413 B / 5 F OB	25.324.6553.0	288
8413 B / 5 OB	25.380.3553.0	288
8413 B / 5 VL	25.386.0553.0	290
8413 B / 5 VL OB	25.386.2553.0	290
8413 B / 5 VR	25.385.0553.0	290
8413 B / 5 VR OB	25.385.2553.0	290
8413 B / 6	25.380.0653.0	288
8413 B / 6 F	25.324.4653.0	288
8413 B / 6 F OB	25.324.6653.0	288
8413 B / 6 OB	25.380.3653.0	288
8413 B / 6 VL	25.386.0653.0	290
8413 B / 6 VL OB	25.386.2653.0	290
8413 B / 6 VR	25.385.0653.0	290
8413 B / 6 VR OB	25.385.2653.0	290
8413 B / 7	25.380.0753.0	288
8413 B / 7 F	25.324.4753.0	288
8413 B / 7 F OB	25.324.6753.0	288
8413 B / 7 OB	25.380.3753.0	288
8413 B / 7 VL	25.386.0753.0	290
8413 B / 7 VL OB	25.386.2753.0	290
8413 B / 7 VR	25.385.0753.0	290
8413 B / 7 VR OB	25.385.2753.0	290
8413 B / 8	25.380.0853.0	288
8413 B / 8 F	25.324.4853.0	288
8413 B / 8 F OB	25.324.6853.0	288
8413 B / 8 OB	25.380.3853.0	288
8413 B / 8 VL	25.386.0853.0	290
8413 B / 8 VL OB	25.386.2853.0	290
8413 B / 8 VR	25.385.0853.0	290
8413 B / 8 VR OB	25.385.2853.0	290
8413 B / 9	25.380.0953.0	288
8413 B / 9 F	25.324.4953.0	288
8413 B / 9 F OB	25.324.6953.0	288
8413 B / 9 OB	25.380.3953.0	288
8413 B / 9 VL	25.386.0953.0	290
8413 B / 9 VL OB	25.386.2953.0	290
8413 B / 9 VR	25.385.0953.0	290
8413 B / 9 VR OB	25.385.2953.0	290
8413 B / 10	25.380.1053.0	288
8413 B / 10 F	25.324.5053.0	288
8413 B / 10 F OB	25.324.7053.0	288
8413 B / 10 OB	25.380.4053.0	288
8413 B / 10 VL	25.386.1053.0	290
8413 B / 10 VL OB	25.386.3053.0	290
8413 B / 10 VR	25.385.1053.0	290
8413 B / 10 VR OB	25.385.3053.0	290
8413 B / 11	25.380.1153.0	288
8413 B / 11 F	25.324.5153.0	288
8413 B / 11 F OB	25.324.7153.0	288
8413 B / 11 OB	25.380.4153.0	288
8413 B / 11 VL	25.386.1153.0	290
8413 B / 11 VL OB	25.386.3153.0	290
8413 B / 11 VR	25.385.1153.0	290
8413 B / 11 VR OB	25.385.3153.0	290
8413 B / 12	25.380.1253.0	288
8413 B / 12 F	25.324.5253.0	288
8413 B / 12 F OB	25.324.7253.0	288
8413 B / 12 OB	25.380.4253.0	288
8413 B / 12 VL	25.386.1253.0	290
8413 B / 12 VL OB	25.386.3253.0	290
8413 B / 12 VR	25.385.1253.0	290
8413 B / 12 VR OB	25.385.3253.0	290
8413 BFK / 2 TOP K	25.880.0253.0	294
8413 BFK / 2 TOP K OB	25.880.3253.0	294
8413 BFK / 2 TOP K F	25.881.0253.0	294
8413 BFK / 2 TOP K F OB	25.881.3253.0	294
8413 BFK / 3 TOP K	25.880.0353.0	294
8413 BFK / 3 TOP K OB	25.880.3353.0	294
8413 BFK / 3 TOP K F	25.881.0353.0	294
8413 BFK / 3 TOP K F OB	25.881.3353.0	294
8413 BFK / 4 TOP K	25.880.0453.0	294
8413 BFK / 4 TOP K OB	25.880.3453.0	294
8413 BFK / 4 TOP K F	25.881.0453.0	294
8413 BFK / 4 TOP K F OB	25.881.3453.0	294
8413 BFK / 5 TOP K	25.880.0553.0	294
8413 BFK / 5 TOP K OB	25.880.3553.0	294
8413 BFK / 5 TOP K F	25.881.0553.0	294
8413 BFK / 5 TOP K F OB	25.881.3553.0	294
8413 BFK / 6 TOP K	25.880.0653.0	294
8413 BFK / 6 TOP K OB	25.880.3653.0	294
8413 BFK / 6 TOP K F	25.881.0653.0	294
8413 BFK / 6 TOP K F OB	25.881.3653.0	294
8413 BFK / 7 TOP K	25.880.0753.0	294
8413 BFK / 7 TOP K OB	25.880.3753.0	294
8413 BFK / 7 TOP K F	25.881.0753.0	294
8413 BFK / 7 TOP K F OB	25.881.3753.0	294
8413 BFK / 8 TOP K	25.880.0853.0	294
8413 BFK / 8 TOP K OB	25.880.3853.0	294

contents of type description

contents TYPE

Type	Part no.	section / page
8413 BFK / 8 TOP K F	25.881.0853.0	294
8413 BFK / 8 TOP K F OB	25.881.3853.0	294
8413 BFK / 9 TOP K	25.880.0953.0	294
8413 BFK / 9 TOP K OB	25.880.3953.0	294
8413 BFK / 9 TOP K F	25.881.0953.0	294
8413 BFK / 9 TOP K F OB	25.881.3953.0	294
8413 BFK /10 TOP K	25.880.1053.0	294
8413 BFK /10 TOP K OB	25.880.4053.0	294
8413 BFK /10 TOP K F	25.881.1053.0	294
8413 BFK /10 TOP K F OB	25.881.4053.0	294
8413 BFK /11 TOP K	25.880.1153.0	294
8413 BFK /11 TOP K OB	25.880.4153.0	294
8413 BFK /11 TOP K F	25.881.1153.0	294
8413 BFK /11 TOP K F OB	25.881.4153.0	294
8413 BFK /12 TOP K	25.880.1253.0	294
8413 BFK /12 TOP K OB	25.880.4253.0	294
8413 BFK /12 TOP K F	25.881.1253.0	294
8413 BFK /12 TOP K F OB	25.881.4253.0	294
8413 S / 2 G OB	25.390.3253.0	300
8413 S / 2 GF OB	25.398.6253.0	300
8413 S / 2 W OB	25.392.3253.0	301
8413 S / 2 WF OB	25.398.2253.0	301
8413 S / 3 G OB	25.390.3353.0	300
8413 S / 3 GF OB	25.398.6353.0	300
8413 S / 3 W OB	25.392.3353.0	301
8413 S / 3 WF OB	25.398.2353.0	301
8413 S / 4 G OB	25.390.3453.0	300
8413 S / 4 GF OB	25.398.6453.0	300
8413 S / 4 W OB	25.392.3453.0	301
8413 S / 4 WF OB	25.398.2453.0	301
8413 S / 5 G OB	25.390.3553.0	300
8413 S / 5 GF OB	25.398.6553.0	300
8413 S / 5 W OB	25.392.3553.0	301
8413 S / 5 WF OB	25.398.2553.0	301
8413 S / 6 G OB	25.390.3653.0	300
8413 S / 6 GF OB	25.398.6653.0	300
8413 S / 6 W OB	25.392.3653.0	301
8413 S / 6 WF OB	25.398.2653.0	301
8413 S / 7 G OB	25.390.3753.0	300
8413 S / 7 GF OB	25.398.6753.0	300
8413 S / 7 W OB	25.392.3753.0	301
8413 S / 7 WF OB	25.398.2753.0	301
8413 S / 8 G OB	25.390.3853.0	300
8413 S / 8 GF OB	25.398.6853.0	300
8413 S / 8 W OB	25.392.3853.0	301
8413 S / 8 WF OB	25.398.2853.0	301
8413 S / 9 G OB	25.390.3953.0	300
8413 S / 9 GF OB	25.398.6953.0	300
8413 S / 9 W OB	25.392.3953.0	301
8413 S / 9 WF OB	25.398.2953.0	301
8413 S / 10 G OB	25.390.4053.0	300
8413 S / 10 GF OB	25.398.7053.0	300
8413 S / 10 W OB	25.392.4053.0	301
8413 S / 10 WF OB	25.398.3053.0	301
8413 S / 11 G OB	25.390.4153.0	300
8413 S / 11 GF OB	25.398.7153.0	300
8413 S / 11 W OB	25.392.4153.0	301
8413 S / 11 WF OB	25.398.3153.0	301
8413 S / 12 G OB	25.390.4253.0	300
8413 S / 12 GF OB	25.398.7253.0	300
8413 S / 12 W OB	25.392.4253.0	301
8413 S / 12 WF OB	25.398.3253.0	301
8458 / 2 TOP H OB	25.793.0253.0	354
8458 / 2 TOP V OB	25.783.0253.0	354
8458 / 3 TOP H OB	25.793.0353.0	354
8458 / 3 TOP V OB	25.783.0353.0	354
8458 / 4 TOP H OB	25.793.0453.0	354
8458 / 4 TOP V OB	25.783.0453.0	354
8458 / 5 TOP H OB	25.793.0553.0	354
8458 / 5 TOP V OB	25.783.0553.0	354
8458 / 6 TOP H OB	25.793.0653.0	354
8458 / 6 TOP V OB	25.783.0653.0	354
8458 / 7 TOP H OB	25.793.0753.0	354
8458 / 7 TOP V OB	25.783.0753.0	354
8458 / 8 TOP H OB	25.793.0853.0	354
8458 / 8 TOP V OB	25.783.0853.0	354
8458 / 9 TOP H OB	25.793.0953.0	354
8458 / 9 TOP V OB	25.783.0953.0	354
8458 / 10 TOP H OB	25.793.1053.0	354
8458 / 10 TOP V OB	25.783.1053.0	354
8458 / 11 TOP H OB	25.793.1153.0	354
8458 / 11 TOP V OB	25.783.1153.0	354
8458 / 12 TOP H OB	25.793.1253.0	354
8458 / 12 TOP V OB	25.783.1253.0	354
8458 / 13 TOP H OB	25.793.1353.0	354
8458 / 13 TOP V OB	25.783.1353.0	354
8458 / 14 TOP H OB	25.793.1453.0	354
8458 / 14 TOP V OB	25.783.1453.0	354
8458 / 15 TOP H OB	25.793.1553.0	354
8458 / 15 TOP V OB	25.783.1553.0	354
8458 / 16 TOP H OB	25.793.1653.0	354
8458 / 16 TOP V OB	25.783.1653.0	354
8485 TOP H	25.771.3453.0	352
8485 TOP H	25.771.3553.0	352
8485 TOP H	25.771.3753.0	352
8485 TOP H	25.771.3853.0	352
8485 TOP V	25.771.0653.0	351
8485 TOP V	25.771.0753.0	351
8485 TOP V	25.771.0853.0	351
8485/ 1 TOP H	25.771.0153.0	352
8485/ 1 TOP V	25.771.0053.0	351
8485/ 2 TOP H	25.771.3253.0	352
8485/ 2 TOP V	25.771.0253.0	351
8485/ 3 TOP H	25.771.3353.0	352
8485/ 3 TOP V	25.771.0353.0	351
8485/ 4 TOP V	25.771.0453.0	351
8485/ 5 TOP V	25.771.0553.0	351
8485/ 6 TOP H	25.771.3653.0	352
8486 / 3 TOP H OB	27.713.0353.0	356
8486 / 3 TOP V OB	27.703.0353.0	356
8486 / 4 TOP H OB	27.713.0453.0	356
8486 / 4 TOP V OB	27.703.0453.0	356
8491 / 2	25.166.0253.0	346
8491 / 2 OB	25.167.0253.0	346
8491 / 2 Z	25.166.3253.0	347
8491 / 2 Z OB	25.167.3253.0	346
8491 / 2 ZN	25.176.0253.0	347
8491 / 2 ZN OB	25.177.0253.0	346
8491 / 2 ZW	25.166.6253.0	347
8491 / 2 ZW OB	25.167.6253.0	347
8491 / 3	25.166.0353.0	346
8491 / 3 OB	25.167.0353.0	346
8491 / 3 Z	25.166.3353.0	347
8491 / 3 Z OB	25.167.3353.0	346
8491 / 3 ZN	25.176.0353.0	347
8491 / 3 ZN OB	25.177.0353.0	346
8491 / 3 ZW	25.166.6353.0	347
8491 / 3 ZW OB	25.167.6353.0	347
8513 B / 2	25.640.0253.0	280
8513 B / 2 F	25.641.0253.0	280
8513 B / 2 F OB	25.641.3253.0	280
8513 B / 2 OB	25.640.3253.0	280
8513 B / 3	25.640.0353.0	280
8513 B / 3 F	25.641.0353.0	280
8513 B / 3 F OB	25.641.3353.0	280
8513 B / 3 OB	25.640.3353.0	280
8513 B / 4	25.640.0453.0	280
8513 B / 4 F	25.641.0453.0	280
8513 B / 4 F OB	25.641.3453.0	280
8513 B / 4 OB	25.640.3453.0	280
8513 B / 5	25.640.0553.0	280
8513 B / 5 F	25.641.0553.0	280
8513 B / 5 F OB	25.641.3553.0	280
8513 B / 5 OB	25.640.3553.0	280
8513 B / 6	25.640.0653.0	280
8513 B / 6 F	25.641.0653.0	280
8513 B / 6 F OB	25.641.3653.0	280
8513 B / 6 OB	25.640.3653.0	280
8513 B / 7	25.640.0753.0	280
8513 B / 7 F	25.641.0753.0	280
8513 B / 7 F OB	25.641.3753.0	280
8513 B / 7 OB	25.640.3753.0	280
8513 B / 8	25.640.0853.0	280
8513 B / 8 F	25.641.0853.0	280
8513 B / 8 F OB	25.641.3853.0	280
8513 B / 8 OB	25.640.3853.0	280
8513 B / 9	25.640.0953.0	280
8513 B / 9 F	25.641.0953.0	280
8513 B / 9 F OB	25.641.3953.0	280
8513 B / 9 OB	25.640.3953.0	280
8513 B / 10	25.640.1053.0	280
8513 B / 10 F	25.641.1053.0	280
8513 B / 10 F OB	25.641.4053.0	280
8513 B / 10 OB	25.640.4053.0	280
8513 B / 11	25.640.1153.0	280
8513 B / 11 F	25.641.1153.0	280
8513 B / 11 F OB	25.641.4153.0	280
8513 B / 11 OB	25.640.4153.0	280
8513 B / 12	25.640.1253.0	280
8513 B / 12 F	25.641.1253.0	280
8513 B / 12 F OB	25.641.4253.0	280
8513 B / 12 OB	25.640.4253.0	280
8513 B / 13	25.640.1353.0	280
8513 B / 13 F	25.641.1353.0	280
8513 B / 13 F OB	25.641.4353.0	280
8513 B / 13 OB	25.640.4353.0	280
8513 B / 14	25.640.1453.0	280
8513 B / 14 F	25.641.1453.0	280
8513 B / 14 F OB	25.641.4453.0	280
8513 B / 14 OB	25.640.4453.0	280
8513 B / 15	25.640.1553.0	280
8513 B / 15 F	25.641.1553.0	280
8513 B / 15 F OB	25.641.4553.0	280
8513 B / 15 OB	25.640.4553.0	280
8513 B / 16	25.640.1653.0	280
8513 B / 16 F	25.641.1653.0	280
8513 B / 16 F OB	25.641.4653.0	280
8513 B / 16 OB	25.640.4653.0	280
8513 BDK/10 TOP	25.630.1053.0	281
8513 BFK/ 2 TOP	25.630.0253.0	281
8513 BFK/ 2 TOP OB	25.630.3253.0	281
8513 BFK/ 3 TOP	25.630.0353.0	281
8513 BFK/ 3 TOP OB	25.630.3353.0	281
8513 BFK/ 4 TOP	25.630.0453.0	281
8513 BFK/ 4 TOP OB	25.630.3453.0	281
8513 BFK/ 5 TOP	25.630.0553.0	281
8513 BFK/ 5 TOP OB	25.630.3553.0	281
8513 BFK/ 6 TOP	25.630.0653.0	281
8513 BFK/ 6 TOP OB	25.630.3653.0	281
8513 BFK/ 7 TOP	25.630.0753.0	281
8513 BFK/ 7 TOP OB	25.630.3753.0	281
8513 BFK/ 8 TOP	25.630.0853.0	281
8513 BFK/ 8 TOP OB	25.630.3853.0	281
8513 BFK/ 9 TOP	25.630.0953.0	281
8513 BFK/ 9 TOP OB	25.630.3953.0	281
8513 BFK/10 TOP OB	25.630.4053.0	281
8513 BFK/11 TOP	25.630.1153.0	281
8513 BFK/11 TOP OB	25.630.4153.0	281
8513 BFK/12 TOP	25.630.1253.0	281
8513 BFK/12 TOP OB	25.630.4253.0	281
8513 BFK/13 TOP	25.630.1353.0	281
8513 BFK/13 TOP OB	25.630.4353.0	281
8513 BFK/14 TOP	25.630.1453.0	281
8513 BFK/14 TOP OB	25.630.4453.0	281
8513 BFK/15 TOP	25.630.1553.0	281
8513 BFK/15 TOP OB	25.630.4553.0	281
8513 BFK/16 TOP	25.630.1653.0	281
8513 BFK/16 TOP OB	25.630.4653.0	281
8513 S / 2 G	25.646.0253.0	284
8513 S / 2 G F	25.646.3253.0	285
8513 S / 2 W	25.647.0253.0	284
8513 S / 2 W F	25.647.3253.0	285
8513 S / 3 G	25.646.0353.0	284
8513 S / 3 GF	25.646.3353.0	285
8513 S / 3 W	25.647.0353.0	284
8513 S / 3 WF	25.647.3353.0	285
8513 S / 4 G	25.646.0453.0	284
8513 S / 4 GF	25.646.3453.0	285
8513 S / 4 W	25.647.0453.0	284
8513 S / 4 WF	25.647.3453.0	285
8513 S / 5 G	25.646.0553.0	284
8513 S / 5 GF	25.646.3553.0	285
8513 S / 5 W	25.647.0553.0	284
8513 S / 5 WF	25.647.3553.0	285
8513 S / 6 G	25.646.0653.0	284
8513 S / 6 GF	25.646.3653.0	285
8513 S / 6 W	25.647.0653.0	284
8513 S / 6 WF	25.647.3653.0	285
8513 S / 7 G	25.646.0753.0	284
8513 S / 7 GF	25.646.3753.0	285
8513 S / 7 W	25.647.0753.0	284
8513 S / 7 WF	25.647.3753.0	285
8513 S / 8 G	25.646.0853.0	284
8513 S / 8 GF	25.646.3853.0	285
8513 S / 8 W	25.647.0853.0	284
8513 S / 8 WF	25.647.3853.0	285
8513 S / 9 G	25.646.0953.0	284
8513 S / 9 GF	25.646.3953.0	285
8513 S / 9 W	25.647.0953.0	284
8513 S / 9 WF	25.647.3953.0	285
8513 S / 10 G	25.646.1053.0	284
8513 S / 10 GF	25.646.4053.0	285
8513 S / 10 W	25.647.1053.0	284
8513 S / 10 WF	25.647.4053.0	285
8513 S / 11 G	25.646.1153.0	284
8513 S / 11 GF	25.646.4153.0	285
8513 S / 11 W	25.647.1153.0	284
8513 S / 11 WF	25.647.4153.0	285
8513 S / 12 G	25.646.1253.0	284
8513 S / 12 G F	25.646.4253.0	285
8513 S / 12 W	25.647.1253.0	284
8513 S / 12 W F	25.647.4253.0	285
8513 S / 13 G	25.646.1353.0	284
8513 S / 13 GF	25.646.4353.0	285
8513 S / 13 WF	25.647.4353.0	285
8513 S / 14 G	25.646.1453.0	284
8513 S / 14 GF	25.646.4453.0	285
8513 S / 14 W	25.647.1453.0	284
8513 S / 14 WF	25.647.4453.0	285
8513 S / 15 G	25.646.1553.0	284
8513 S / 15 GF	25.646.4553.0	285
8513 S / 15 W	25.647.1553.0	284
8513 S / 15 WF	25.647.4553.0	285
8513 S / 16 G	25.646.1653.0	284
8513 S / 16 GF	25.646.4653.0	285
8513 S / 16 W	25.647.1653.0	284
8513 S / 16 WF	25.647.4653.0	285
8513 SUFK / 2 OB	25.642.3253.0	281
8513 SUFK / 3 OB	25.642.3353.0	281
8513 SUFK / 4 OB	25.642.3453.0	281
8513 SUFK / 5 OB	25.642.3553.0	281
8513 SUFK / 6 OB	25.642.3653.0	281
8513 SUFK / 7 OB	25.642.3753.0	281
8513 SUFK / 8 OB	25.642.3853.0	281
8513 SUFK / 9 OB	25.642.3953.0	281
8513 SUFK / 10 OB	25.642.4053.0	281
8513 SUFK / 11 OB	25.642.4153.0	281
8513 SUFK / 12	25.642.1253.0	281
8513 SUFK / 12 OB	25.642.4253.0	281
8520 B / 2 OB	25.470.0253.0	324
8520 B / 3	25.470.3353.0	324
8520 B / 3 OB	25.470.0353.0	324
8520 B / 4 OB	25.470.0453.0	324
8520 B / 5 OB	25.470.0553.0	324
8520 B / 6 OB	25.470.0653.0	324
8520 B / 7	25.470.3753.0	324
8520 B / 7 OB	25.470.0753.0	324
8520 B / 8	25.470.3853.0	324
8520 B / 8 OB	25.470.0853.0	324
8520 B / 9 OB	25.470.0953.0	324
8520 B / 10 OB	25.470.1053.0	324
8520 B / 11	25.470.4153.0	324
8520 B / 11 OB	25.470.1153.0	324
8520 B / 12 OB	25.470.1253.0	324
8520 B / 13	25.470.4353.0	324
8520 B / 13 OB	25.470.1353.0	324
8520 B / 14	25.470.4453.0	324
8520 B / 14 OB	25.470.1453.0	324
8520 B / 15	25.470.4553.0	324
8520 B / 15 OB	25.470.1553.0	324
8520 B / 16	25.470.4653.0	324
8520 B / 16 OB	25.470.1653.0	324
8520 BL / 2 W OB	25.471.0253.0	325
8520 BL / 3 G OB	25.472.0353.0	325
8520 BL / 3 W OB	25.471.0353.0	325
8520 BL / 4 G OB	25.472.0453.0	325
8520 BL / 6 G OB	25.472.0653.0	325
8520 BL / 6 W	25.471.3653.0	325
8520 BL / 7 G	25.472.3753.0	325
8520 BL / 7 G OB	25.472.0753.0	325
8520 BL / 7 W	25.471.3753.0	325

contents

Type	Part no.	section / page
8520 BL / 7 W OB	25.471.0753.0	325
8520 BL / 11 G	25.472.4153.0	325
8520 BL / 11 G OB	25.472.1153.0	325
8520 BL / 11 W	25.471.4153.0	325
8520 BL / 11 W OB	25.471.1153.0	325
8520 BL / 13 G	25.472.4353.0	325
8520 BL / 13 G OB	25.472.1353.0	325
8520 BL / 13 W	25.471.4353.0	325
8520 BL / 13 W OB	25.471.1353.0	325
8520 BL / 14 G	25.472.4453.0	325
8520 BL / 14 G OB	25.472.1453.0	325
8520 BL / 14 W	25.471.4453.0	325
8520 BL / 14 W OB	25.471.1453.0	325
8520 BL / 15 G	25.472.4553.0	325
8520 BL / 15 G OB	25.472.1553.0	325
8520 BL / 15 W	25.471.4553.0	325
8520 BL / 15 W OB	25.471.1553.0	325
8520 BL / 16 G	25.472.4653.0	325
8520 BL / 16 W	25.471.4653.0	325
8520 S / 2 G 0,8	Z5.535.0225.0	324
8520 S / 2 G 1,0	Z5.535.3225.0	324
8520 S / 3 G 0,8	Z5.535.0325.0	324
8520 S / 3 G 1,0	Z5.535.3325.0	324
8520 S / 4 G 0,8	Z5.535.0425.0	324
8520 S / 4 G 1,0	Z5.535.3425.0	324
8520 S / 5 G 0,8	Z5.535.0525.0	324
8520 S / 5 G 1,0	Z5.535.3525.0	324
8520 S / 6 G 0,8	Z5.535.0625.0	324
8520 S / 6 G 1,0	Z5.535.3625.0	324
8520 S / 7 G 0,8	Z5.535.0725.0	324
8520 S / 7 G 1,0	Z5.535.3725.0	324
8520 S / 8 G 0,8	Z5.535.0825.0	324
8520 S / 8 G 1.0	Z5.535.3825.0	324
8520 S / 10 G 0,8	Z5.535.1025.0	324
8520 S / 10 G 1,0	Z5.535.4025.0	324
8520 S / 11 G 0,8	Z5.535.1125.0	324
8520 S / 11 G 1,0	Z5.535.4125.0	324
8520 S / 12 G 0,8	Z5.535.1225.0	324
8520 S / 12 G 1,0	Z5.535.4225.0	324
8520 S / 13 G 0,8	Z5.535.1325.0	324
8520 S / 13 G 1,0	Z5.535.4325.0	324
8520 S / 14 G 0,8	Z5.535.1425.0	324
8520 S / 14 G 1,0	Z5.535.4425.0	324
8520 S / 15 G 0,8	Z5.535.1525.0	324
8520 S / 15 G 1,0	Z5.535.4525.0	324
8520 S / 16 G 0,8	Z5.535.1625.0	324
8520 S / 16 G 1,0	Z5.535.4625.0	324
8543 / 2	25.600.5253.0	316
8543 / 2 OB	25.602.5253.0	316
8543 / 3	25.600.5353.0	316
8543 / 3 OB	25.602.5353.0	316
8543 / 4	25.600.5453.0	316
8543 / 4 OB	25.602.5453.0	316
8543 / 5	25.600.5553.0	316
8543 / 5 OB	25.602.5553.0	316
8543 / 6	25.600.5653.0	316
8543 / 6 OB	25.602.5653.0	316
8543 / 7	25.600.5753.0	316
8543 / 7 OB	25.602.5753.0	316
8543 / 8	25.600.5853.0	316
8543 / 8 OB	25.602.5853.0	316
8543 / 9	25.600.5953.0	316
8543 / 9 OB	25.602.5953.0	316
8543 / 10	25.600.6053.0	316
8543 / 10 OB	25.602.6053.0	316
8543 / 11	25.600.6153.0	316
8543 / 11 OB	25.602.6153.0	316
8543 / 12	25.600.6253.0	316
8543 / 12 OB	25.602.6253.0	316
8543 / 13	25.600.6353.0	316
8543 / 13 OB	25.602.6353.0	316
8543 / 14	25.600.6453.0	316
8543 / 14 OB	25.602.6453.0	316
8543 / 15	25.600.6553.0	316
8543 / 15 OB	25.602.6553.0	316
8543 / 16	25.600.6653.0	316
8543 / 16 OB	25.602.6653.0	316
8591 V/ 10/40 VB1 OB	25.154.7053.0	373
8593 / 2	25.194.0253.0	336
8593 / 2 OB	25.195.0253.0	336
8593 / 2 ZN	25.194.9253.0	336
8593 / 2 ZN OB	25.195.9253.0	336
8593 / 3	25.194.0353.0	336
8593 / 3 OB	25.195.0353.0	336
8593 / 3 ZN	25.194.9353.0	336
8593 / 3 ZN OB	25.195.9353.0	336
8593 / 4	25.194.0453.0	336
8593 / 4 OB	25.195.0453.0	336
8593 / 5	25.194.0553.0	336
8593 / 5 OB	25.195.0553.0	336
8593 / 6	25.194.0653.0	336
8593 / 6 OB	25.195.0653.0	336
8593 / 7	25.194.0753.0	336
8593 / 7 OB	25.195.0753.0	336
8593 / 8	25.194.0853.0	336
8593 / 8 OB	25.195.0853.0	336
8593 / 9	25.194.0953.0	336
8593 / 9 OB	25.195.0953.0	336
8593 / 10	25.194.1053.0	336
8593 / 10 OB	25.195.1053.0	336
8593 / 11	25.194.1153.0	336
8593 / 11 OB	25.195.1153.0	336
8593 / 12	25.194.1253.0	336
8593 / 12 OB	25.195.1253.0	336
8593 / 13	25.194.1353.0	336
8593 / 13 OB	25.195.1353.0	336
8593 / 14	25.194.1453.0	336
8593 / 14 OB	25.195.1453.0	336
8593 / 15	25.194.1553.0	336
8593 / 15 OB	25.195.1553.0	336
8593 / 16	25.194.1653.0	336
8593 / 16 OB	25.195.1653.0	336
8813 B / 2	25.620.0253.0	280
8813 B / 2 F	25.621.0253.0	280
8813 B / 2 F OB	25.621.3253.0	280
8813 B / 2 OB	25.620.3253.0	280
8813 B / 2 VL	25.624.0253.0	282
8813 B / 2 VL F	25.625.0253.0	283
8813 B / 2 VL F OB	25.625.3253.0	283
8813 B / 2 VL OB	25.624.3253.0	282
8813 B / 2 VR	25.622.0253.0	282
8813 B / 2 VR F	25.623.0253.0	283
8813 B / 2 VR F OB	25.623.3253.0	283
8813 B / 2 VR OB	25.622.3253.0	282
8813 B / 3	25.620.0353.0	280
8813 B / 3 F	25.621.0353.0	280
8813 B / 3 F OB	25.621.3353.0	280
8813 B / 3 OB	25.620.3353.0	280
8813 B / 3 VL	25.624.0353.0	282
8813 B / 3 VL F	25.625.0353.0	283
8813 B / 3 VL F OB	25.625.3353.0	283
8813 B / 3 VL OB	25.624.3353.0	282
8813 B / 3 VR F	25.623.0353.0	283
8813 B / 3 VR F OB	25.623.3353.0	283
8813 B / 3 VR OB	25.622.3353.0	282
8813 B / 4	25.620.0453.0	280
8813 B / 4 F	25.621.0453.0	280
8813 B / 4 F OB	25.621.3453.0	280
8813 B / 4 OB	25.620.3453.0	280
8813 B / 4 VL	25.624.0453.0	282
8813 B / 4 VL F	25.625.0453.0	283
8813 B / 4 VL F OB	25.625.3453.0	283
8813 B / 4 VL OB	25.624.3453.0	282
8813 B / 4 VR F	25.623.0453.0	283
8813 B / 4 VR F OB	25.623.3453.0	283
8813 B / 4 VR OB	25.622.3453.0	282
8813 B / 5	25.620.0553.0	280
8813 B / 5 F	25.621.0553.0	280
8813 B / 5 F OB	25.621.3553.0	280
8813 B / 5 OB	25.620.3553.0	280
8813 B / 5 VL	25.624.0553.0	282
8813 B / 5 VL F	25.625.0553.0	283
8813 B / 5 VL F OB	25.625.3553.0	283
8813 B / 5 VL OB	25.624.3553.0	282
8813 B / 5 VR F	25.623.0553.0	283
8813 B / 5 VR F OB	25.623.3553.0	283
8813 B / 5 VR OB	25.622.3553.0	282
8813 B / 6	25.620.0653.0	280
8813 B / 6 F	25.621.0653.0	280
8813 B / 6 F OB	25.621.3653.0	280
8813 B / 6 OB	25.620.3653.0	280
8813 B / 6 VL	25.624.0653.0	282
8813 B / 6 VL F	25.625.0653.0	283
8813 B / 6 VL F OB	25.625.3653.0	283
8813 B / 6 VL OB	25.624.3653.0	282
8813 B / 6 VR	25.622.0653.0	282
8813 B / 6 VR F	25.623.0653.0	283
8813 B / 6 VR F OB	25.623.3653.0	283
8813 B / 6 VR OB	25.622.3653.0	282
8813 B / 7	25.620.0753.0	280
8813 B / 7 F	25.621.0753.0	280
8813 B / 7 F OB	25.621.3753.0	280
8813 B / 7 OB	25.620.3753.0	280
8813 B / 7 VL	25.624.0753.0	282
8813 B / 7 VL F	25.625.0753.0	283
8813 B / 7 VL F OB	25.625.3753.0	283
8813 B / 7 VL OB	25.624.3753.0	282
8813 B / 7 VR F	25.623.0753.0	283
8813 B / 7 VR F OB	25.623.3753.0	283
8813 B / 7 VR OB	25.622.3753.0	282
8813 B / 8	25.620.0853.0	280
8813 B / 8 F	25.621.0853.0	280
8813 B / 8 F OB	25.621.3853.0	280
8813 B / 8 OB	25.620.3853.0	280
8813 B / 8 VL	25.624.0853.0	282
8813 B / 8 VL F	25.625.0853.0	283
8813 B / 8 VL F OB	25.625.3853.0	283
8813 B / 8 VL OB	25.624.3853.0	282
8813 B / 8 VR	25.622.0853.0	282
8813 B / 8 VR F	25.623.0853.0	283
8813 B / 8 VR F OB	25.623.3853.0	283
8813 B / 8 VR OB	25.622.3853.0	282
8813 B / 9	25.620.0953.0	280
8813 B / 9 F	25.621.0953.0	280
8813 B / 9 F OB	25.621.3953.0	280
8813 B / 9 OB	25.620.3953.0	280
8813 B / 9 VL	25.624.0953.0	282
8813 B / 9 VL F	25.625.0953.0	283
8813 B / 9 VL F OB	25.625.3953.0	283
8813 B / 9 VL OB	25.624.3953.0	282
8813 B / 9 VR F	25.623.0953.0	283
8813 B / 9 VR F OB	25.623.3953.0	283
8813 B / 9 VR OB	25.622.3953.0	282
8813 B / 10	25.620.1053.0	280
8813 B / 10 F	25.621.1053.0	280
8813 B / 10 F OB	25.621.4053.0	280
8813 B / 10 OB	25.620.4053.0	280
8813 B / 10 VL	25.624.1053.0	282
8813 B / 10 VL F	25.625.1053.0	283
8813 B / 10 VL F OB	25.625.4053.0	283
8813 B / 10 VL OB	25.624.4053.0	282
8813 B / 10 VR	25.622.1053.0	282
8813 B / 10 VR F	25.623.1053.0	283
8813 B / 10 VR F OB	25.623.4053.0	283
8813 B / 10 VR OB	25.622.4053.0	282
8813 B / 11	25.620.1153.0	280
8813 B / 11 F	25.621.1153.0	280
8813 B / 11 F OB	25.621.4153.0	280
8813 B / 11 OB	25.620.4153.0	280
8813 B / 11 VL	25.624.1153.0	282
8813 B / 11 VL F	25.625.1153.0	283
8813 B / 11 VL F OB	25.625.4153.0	283
8813 B / 11 VL OB	25.624.4153.0	282
8813 B / 11 VR	25.622.1153.0	282
8813 B / 11 VR F	25.623.1153.0	283
8813 B / 11 VR F OB	25.623.4153.0	283
8813 B / 11 VR OB	25.622.4153.0	282
8813 B / 12	25.620.1253.0	280
8813 B / 12 F	25.621.1253.0	280
8813 B / 12 F OB	25.621.4253.0	280
8813 B / 12 OB	25.620.4253.0	280
8813 B / 12 VL	25.624.1253.0	282
8813 B / 12 VL F	25.625.1253.0	283
8813 B / 12 VL F OB	25.625.4253.0	283
8813 B / 12 VL OB	25.624.4253.0	282
8813 B / 12 VR	25.622.1253.0	282
8813 B / 12 VR F	25.623.1253.0	283
8813 B / 12 VR F OB	25.623.4253.0	283
8813 B / 12 VR OB	25.622.4253.0	282
8813 B / 13	25.620.1353.0	280
8813 B / 13 F	25.621.1353.0	280
8813 B / 13 F OB	25.621.4353.0	280
8813 B / 13 OB	25.620.4353.0	280
8813 B / 13 VL	25.624.1353.0	282
8813 B / 13 VL F	25.625.1353.0	283
8813 B / 13 VL F OB	25.625.4353.0	283
8813 B / 13 VL OB	25.624.4353.0	282
8813 B / 13 VR	25.622.1353.0	282
8813 B / 13 VR F	25.623.1353.0	283
8813 B / 13 VR F OB	25.623.4353.0	283
8813 B / 14	25.620.1453.0	280
8813 B / 14 F	25.621.1453.0	280
8813 B / 14 F OB	25.621.4453.0	280
8813 B / 14 OB	25.620.4453.0	280
8813 B / 14 VL	25.624.1453.0	282
8813 B / 14 VL F	25.625.1453.0	283
8813 B / 14 VL F OB	25.625.4453.0	283
8813 B / 14 VL OB	25.624.4453.0	282
8813 B / 14 VR	25.622.1453.0	282
8813 B / 14 VR F	25.623.1453.0	283
8813 B / 14 VR F OB	25.623.4453.0	283
8813 B / 14 VR OB	25.622.4453.0	282
8813 B / 15	25.620.1553.0	280
8813 B / 15 F	25.621.1553.0	280
8813 B / 15 F OB	25.621.4553.0	280
8813 B / 15 OB	25.620.4553.0	280
8813 B / 15 VL	25.624.1553.0	282
8813 B / 15 VL F	25.625.1553.0	283
8813 B / 15 VL F OB	25.625.4553.0	283
8813 B / 15 VL OB	25.624.4553.0	282
8813 B / 15 VR	25.622.1553.0	282
8813 B / 15 VR F	25.623.1553.0	283
8813 B / 15 VR F OB	25.623.4553.0	283
8813 B / 15 VR OB	25.622.4553.0	282
8813 B / 16	25.620.1653.0	280
8813 B / 16 F	25.621.1653.0	280
8813 B / 16 F OB	25.621.4653.0	280
8813 B / 16 OB	25.620.4653.0	280
8813 B / 16 VL	25.624.1653.0	282
8813 B / 16 VL F	25.625.1653.0	283
8813 B / 16 VL F OB	25.625.4653.0	283
8813 B / 16 VL OB	25.624.4653.0	282
8813 B / 16 VR	25.622.1653.0	282
8813 B / 16 VR F OB	25.623.4653.0	283
8813 B / 16 VR OB	25.622.4653.0	282
8813 B / 3 VR	25.622.0353.0	282
8813 B / 4 VR	25.622.0453.0	282
8813 B / 7 VR	25.622.0753.0	282
8813 B / 9 VR	25.622.0953.0	282
8813 B/ 5 VR	25.622.0553.0	282
8813 S / 2 G	25.626.0253.0	284
8813 S / 2 GF	25.626.3253.0	285
8813 S / 2 W	25.627.0253.0	284
8813 S / 2 WF	25.627.3253.0	285
8813 S / 3 G	25.626.0353.0	284
8813 S / 3 GF	25.626.3353.0	285
8813 S / 3 W	25.627.0353.0	284
8813 S / 3 WF	25.627.3353.0	285
8813 S / 4 G	25.626.0453.0	284
8813 S / 4 GF	25.626.3453.0	285
8813 S / 4 W	25.627.0453.0	284
8813 S / 4 WF	25.627.3453.0	285
8813 S / 5 G	25.626.0553.0	284
8813 S / 5 GF	25.626.3553.0	285
8813 S / 5 W	25.627.0553.0	284
8813 S / 5 WF	25.627.3553.0	285
8813 S / 6 G	25.626.0653.0	284
8813 S / 6 GF	25.626.3653.0	285
8813 S / 6 W	25.627.0653.0	284
8813 S / 6 WF	25.627.3653.0	285
8813 S / 7 G	25.626.0753.0	284
8813 S / 7 GF	25.626.3753.0	285
8813 S / 7 W	25.627.0753.0	284
8813 S / 7 WF	25.627.3753.0	285
8813 S / 8 G	25.626.0853.0	284
8813 S / 8 GF	25.626.3853.0	285
8813 S / 8 W	25.627.0853.0	284
8813 S / 8 WF	25.627.3853.0	285
8813 S / 9 G	25.626.0953.0	284
8813 S / 9 GF	25.626.3953.0	285
8813 S / 9 W	25.627.0953.0	284

contents of
type description

contents TYPE

Type	Part no.	section / page
8813 S / 9 WF	25.627.3953.0	285
8813 S / 10 G	25.626.1053.0	284
8813 S / 10 GF	25.626.4053.0	285
8813 S / 10 W	25.627.1053.0	284
8813 S / 10 WF	25.627.4053.0	285
8813 S / 11 G	25.626.1153.0	284
8813 S / 11 GF	25.626.4153.0	285
8813 S / 11 W	25.627.1153.0	284
8813 S / 11 WF	25.627.4153.0	285
8813 S / 12 G	25.626.1253.0	284
8813 S / 12 GF	25.626.4253.0	285
8813 S / 12 W	25.627.1253.0	284
8813 S / 12 WF	25.627.4253.0	285
8813 S / 13 G	25.626.1353.0	284
8813 S / 13 GF	25.626.4353.0	285
8813 S / 13 W	25.627.1353.0	284
8813 S / 13 WF	25.627.4353.0	285
8813 S / 14 G	25.626.1453.0	284
8813 S / 14 GF	25.626.4453.0	285
8813 S / 14 W	25.627.1453.0	284
8813 S / 14 WF	25.627.4453.0	285
8813 S / 15 G	25.626.1553.0	284
8813 S / 15 GF	25.626.4553.0	285
8813 S / 15 W	25.627.1553.0	284
8813 S / 15 WF	25.627.4553.0	285
8813 S / 16 G	25.626.1653.0	284
8813 S / 16 GF	25.626.4653.0	285
8813 S / 16 W	25.627.1653.0	284
8813 S / 16 WF	25.627.4653.0	285
8813B / 13 VR OB	25.622.4353.0	282
8893 / 11	25.196.1153.0	336
8893 / 13	25.196.1353.0	336
8893 / 14	25.196.1453.0	336
8893 / 15	25.196.1553.0	336
8893 / 2 OB	25.197.0253.0	336
8893 / 2 ZN	25.196.9253.0	336
8893 / 2 ZN OB	25.197.9253.0	336
8893 / 3	25.196.0353.0	336
8893 / 3 OB	25.197.0353.0	336
8893 / 3 ZN	25.196.9353.0	336
8893 / 3 ZN OB	25.197.9353.0	336
8893 / 4	25.196.0453.0	336
8893 / 4 OB	25.197.0453.0	336
8893 / 5	25.196.0553.0	336
8893 / 5 OB	25.197.0553.0	336
8893 / 6	25.196.0653.0	336
8893 / 6 OB	25.197.0653.0	336
8893 / 7	25.196.0753.0	336
8893 / 7 OB	25.197.0753.0	336
8893 / 8	25.196.0853.0	336
8893 / 8 OB	25.197.0853.0	336
8893 / 9	25.196.0953.0	336
8893 / 9 OB	25.197.0953.0	336
8893 / 10	25.196.1053.0	336
8893 / 10 OB	25.197.1053.0	336
8893 / 11 OB	25.197.1153.0	336
8893 / 12	25.196.1253.0	336
8893 / 12 OB	25.197.1253.0	336
8893 / 13 OB	25.197.1353.0	336
8893 / 14 OB	25.197.1453.0	336
8893 / 15 OB	25.197.1553.0	336
8893 / 16	25.196.1653.0	336
8893 / 16 OB	25.197.1653.0	336
8893 / 2	25.196.0253.0	336
9003 C	04.241.0651.0	584
9003 C / 4	04.242.1050.0	394
9003 C / 4	04.242.1050.0	584
9003 C B	04.841.0651.0	584
9006 EN 60715 - G 32	98.190.0000.0	802
9006 EN 60715 - G 32	98.190.0000.0	584
9006 EN 60715 - G 32	98.190.0000.0	102
9006 AL 32	98.210.0000.0	802
9006 AL 32	98.210.0000.0	171
9006 CU EN 60715 - G 32	98.220.0000.0	110
9006 CU EN 60715 - G 32	98.220.0000.0	802
9006 GELOCHT	98.190.1000.0	171
9006 GELOCHT	98.190.1000.0	802
9011 A	05.508.3121.0	191
9011 B	05.508.3221.0	101
9011 C	05.508.8821.0	176
9011 D	05.508.8921.0	176
9012	Z7.269.0723.0	197
9012 / 2.5 UB	Z7.269.0623.0	161
9012 / 6	Z7.269.0523.0	197
9018 D	Z5.516.2511.0	169
9018 H	Z5.516.2711.0	169
9018 N	Z5.516.2811.0	169
9021/15X5,5EN60715	98.090.0000.0	802
9021/15X5,5EN60715	98.090.0000.0	171
9021/15X5,5EN60715	98.090.0015.0	40
9021/15X5,5EN60715	98.090.0015.0	802
9208 / S15	Z5.522.7553.0	40
9215 - 2	Z7.210.3227.0	114
9215 - 3	Z7.210.3327.0	114
9215 - 4	Z7.210.3427.0	164
9215 - 5	Z7.210.3527.0	164
9215 - 6	Z7.210.3627.0	114
9215 M-70	Z7.210.3027.0	164
9222	Z5.522.5010.0	40
9290 L	59.900.2052.0	220
9290 L BLAU	59.900.2053.6	220
9290 S	59.900.2552.0	220
9526826	99.243.3564.7	385
9526832	99.239.3564.7	385
9526833	99.259.3564.7	385
9700 / 10 E / 1	Z2.302.1321.0	211
9700 A / 5 S35	54.003.7553.0	189
9700 A / 5 S35 BLAU	54.003.7553.6	189
9700 A / 6 ETK S35	54.004.7753.0	189
9700 A / 6 S35	54.004.7553.0	189
9700 A / 6 S35 BLAU	54.004.7553.6	190
9700 A / 6 SL 2 S35	56.004.9053.0	189
9700 A / 8 ETK S35	54.010.7753.0	189
9700 A / 8 S35	54.010.7553.0	189
9700 A / 8 S35 BLAU	54.010.7553.6	191
9700 A / 8 SL 2 S35	56.010.9053.0	189
9700 A / 10 ETK S35	54.016.7753.0	189
9700 A / 10 S35	54.016.7553.0	189
9700 A / 10 S35 BLAU	54.016.7553.6	191
9700 A / 10 SL 2 S35	56.016.9053.0	189
9700 A / 12 S35	54.025.7553.0	191
9700 A / 12 S35 BLAU	54.025.7553.6	191
9700 A / 16 PEN2 S35	56.035.9453.0	195
9700 A / 16 S35	54.035.7553.0	189
9700 A / 16 S35 BLAU	54.035.7553.6	189
9700 A / 16 SL 2 S35	56.035.9053.0	189
9700 A / 35 E S35	Z2.302.0621.0	111
9700 B/30 SI E14/S32/V0	54.904.4055.0	129
9700 B/30 SI E14/S35/V0	56.904.4055.0	128
9700 B/30 SI E18/S32/V0	54.925.4055.0	129
9700 B/30 SI E18/S35/V0	56.925.4055.0	128
9701 / 6	07.310.3153.0	190
9701 / 6 BLAU	07.310.3153.6	190
9701 / 6 ETK L	07.310.4553.0	193
9701 / 6 SL	07.312.0053.0	194
9701 / 8	07.310.3253.0	191
9701 / 8 BLAU	07.310.3253.6	191
9701 / 8 SL	07.312.0153.0	194
9701 / 10	07.310.3953.0	191
9701 / 10 BLAU	07.310.3953.6	191
9701 / 10 SL	07.312.0253.0	195
9701 / 12	07.310.3353.0	191
9701 / 12 BLAU	07.310.3353.6	191
9701 / 16 SL	07.312.0353.0	189
9701 A SH S35	01.112.1453.0	193
9701 A/6 1S KO TP 2/V0	07.310.5855.0	141
9701 B / 8 ETK	07.310.5253.0	193
9701 B / 10 ETK	07.310.5353.0	193
9702 / 6	07.310.3453.0	190
9702 / 6 BLAU	07.310.3453.6	190
9702 / 8	07.310.3553.0	191
9702 / 8 BLAU	07.310.3553.6	191
9702 / 10	07.310.4053.0	191
9702 / 10 BLAU	07.310.4053.6	191
9702 / 12	07.310.3653.0	191
9702 / 12 BLAU	07.310.3653.6	191
9703 / 5 M	Z7.215.0027.0	190
9703 / 5- 2	Z7.215.0227.0	189
9703 / 5- 3	Z7.215.0327.0	190
9703 / 5- 4	Z7.215.0427.0	190
9703 / 5- 5	Z7.215.0527.0	190
9703 / 5- 6	Z7.215.0627.0	190
9703 / 6 M-70	Z7.211.0027.0	72
9703 / 6- 2	Z7.211.0227.0	72
9703 / 6- 3	Z7.211.0327.0	86
9703 / 6- 4	Z7.211.0427.0	86
9703 / 6- 5	Z7.211.0527.0	86
9703 / 6- 6	Z7.211.0627.0	72
9703 / 8 M-50	Z7.212.0027.0	196
9703 / 8- 2	Z7.212.0227.0	191
9703 / 8- 3	Z7.212.0327.0	191
9703 / 8- 4	Z7.212.0427.0	191
9703 / 8- 5	Z7.212.0527.0	191
9703 / 8- 6	Z7.212.0627.0	191
9703 / 10 M	Z7.214.0027.0	196
9703 / 10- 2	Z7.214.0227.0	189
9703 / 10- 3	Z7.214.0327.0	191
9703 / 10- 4	Z7.214.0427.0	191
9703 / 10- 5	Z7.214.0527.0	191
9703 / 10- 6	Z7.214.0627.0	191
9703 / 12 M	Z7.213.0027.0	196
9703 / 12- 2	Z7.213.0227.0	191
9703 / 12- 3	Z7.213.0327.0	191
9703 / 12- 4	Z7.213.0427.0	191
9703 / 12- 5	Z7.213.0527.0	191
9703 / 12- 6	Z7.213.0627.0	191
9703 / 16 M	Z7.216.0027.0	196
9703 / 16- 2	Z7.216.0227.0	189
9703 / 16- 3	Z7.216.0327.0	192
9703 / 16- 4	Z7.216.0427.0	192
9703 / 16- 5	Z7.216.0527.0	192
9703 / 16- 6	Z7.216.0627.0	192
9704 A	04.241.1150.0	598
9704 A	04.241.1150.0	791
9704 A	04.241.1150.0	181
9704 A / 0 B	04.841.2050.0	791
9704 A / 0 B	04.841.2050.0	598
9704 A / 0 B	04.841.2050.0	395
9704 A / 0 B	04.841.2050.0	181
9704 A / 1 B	04.841.1150.0	598
9704 A / 1 B	04.841.1150.0	791
9704 A / 1 B	04.841.1150.0	181
9704 A / 1 B	04.841.1150.0	395
9704 A / 1-0 B	04.841.2150.0	598
9704 A / 1-0 B	04.841.2150.0	181
9704 A / 1-0 B	04.841.2150.0	791
9704 A / 1-0 B	04.841.2150.0	349
9704 A / 2 B	04.841.1250.0	181
9704 A / 2 B	04.841.1250.0	395
9704 A / 2 B	04.841.1250.0	598
9704 A / 2 B	04.841.1250.0	791
9704 A / 3 B	04.841.1350.0	791
9704 A / 3 B	04.841.1350.0	598
9704 A / 3 B	04.841.1350.0	395
9704 A / 3 B	04.841.1350.0	181
9704 A / 4 B	04.841.1450.0	598
9704 A / 4 B	04.841.1450.0	791
9704 A / 4 B	04.841.1450.0	395
9704 A / 4 B	04.841.1450.0	181
9704 A / 5 B	04.841.1550.0	395
9704 A / 5 B	04.841.1550.0	181
9704 A / 5 B	04.841.1550.0	598
9704 A / 5 B	04.841.1550.0	791
9704 A / 6 B	04.841.1650.0	598
9704 A / 6 B	04.841.1650.0	791
9704 A / 6 B	04.841.1650.0	181
9704 A / 6 B	04.841.1650.0	395
9704 A / 7 B	04.841.1750.0	181
9704 A / 7 B	04.841.1750.0	598
9704 A / 7 B	04.841.1750.0	791
9704 A / 7 B	04.841.1750.0	395
9704 A / 8 B	04.841.1850.0	791
9704 A / 8 B	04.841.1850.0	181
9704 A / 8 B	04.841.1850.0	598
9704 A / 8 B	04.841.1850.0	395
9704 A / 9 B	04.841.1950.0	181
9704 A / 9 B	04.841.1950.0	598
9704 A / 9 B	04.841.1950.0	791
9704 A / 9 B	04.841.1950.0	395
9704 A /+ B	04.841.7450.0	395
9704 A /+ B	04.841.7450.0	599
9704 A /+ B	04.841.7450.0	181
9704 A /+ B	04.841.7450.0	791
9704 A /- B	04.841.7550.0	181
9704 A /- B	04.841.7550.0	599
9704 A /- B	04.841.7550.0	791
9704 A /- B	04.841.7550.0	395
9704 A /. B	04.841.7750.0	791
9704 A /. B	04.841.7750.0	181
9704 A /. B	04.841.7750.0	599
9704 A /. B	04.841.7750.0	395
9704 A // B	04.841.7650.0	181
9704 A // B	04.841.7650.0	599
9704 A // B	04.841.7650.0	395
9704 A // B	04.841.7650.0	791
9704 A /AG B	04.841.2250.0	395
9704 A /AG B	04.841.2250.0	598
9704 A /AG B	04.841.2250.0	791
9704 A /AK B	04.841.4850.0	599
9704 A /AK B	04.841.4850.0	395
9704 A /AK B	04.841.4850.0	791
9704 A /BG B	04.841.2350.0	598
9704 A /BG B	04.841.2350.0	791
9704 A /BG B	04.841.2350.0	395
9704 A /BK B	04.841.4950.0	395
9704 A /BK B	04.841.4950.0	791
9704 A /BK B	04.841.4950.0	599
9704 A /CG B	04.841.2450.0	395
9704 A /CG B	04.841.2450.0	791
9704 A /CG B	04.841.2450.0	598
9704 A /CK B	04.841.5050.0	395
9704 A /CK B	04.841.5050.0	599
9704 A /CK B	04.841.5050.0	791
9704 A /DG B	04.841.2550.0	598
9704 A /DG B	04.841.2550.0	791
9704 A /DG B	04.841.2550.0	395
9704 A /DK B	04.841.5150.0	599
9704 A /DK B	04.841.5150.0	791
9704 A /DK B	04.841.5150.0	395
9704 A /EG B	04.841.2650.0	791
9704 A /EG B	04.841.2650.0	395
9704 A /EG B	04.841.2650.0	598
9704 A /EK B	04.841.5250.0	791
9704 A /EK B	04.841.5250.0	599
9704 A /EK B	04.841.5250.0	395
9704 A /FG B	04.841.2750.0	598
9704 A /FG B	04.841.2750.0	791
9704 A /FG B	04.841.2750.0	395
9704 A /FK B	04.841.5350.0	791
9704 A /FK B	04.841.5350.0	599
9704 A /FK B	04.841.5350.0	395
9704 A /GG B	04.841.2850.0	598
9704 A /GG B	04.841.2850.0	791
9704 A /GG B	04.841.2850.0	395
9704 A /GK B	04.841.5450.0	791
9704 A /GK B	04.841.5450.0	395
9704 A /GK B	04.841.5450.0	599
9704 A /HG B	04.841.2950.0	791
9704 A /HG B	04.841.2950.0	598
9704 A /HG B	04.841.2950.0	395
9704 A /HK B	04.841.5550.0	395
9704 A /HK B	04.841.5550.0	599
9704 A /HK B	04.841.5550.0	791
9704 A /IG B	04.841.3050.0	791
9704 A /IG B	04.841.3050.0	598
9704 A /IG B	04.841.3050.0	395
9704 A /IK B	04.841.5650.0	791
9704 A /IK B	04.841.5650.0	395
9704 A /IK B	04.841.5650.0	599
9704 A /JG B	04.841.3150.0	395
9704 A /JG B	04.841.3150.0	598
9704 A /JG B	04.841.3150.0	791
9704 A /JK B	04.841.5750.0	395
9704 A /JK B	04.841.5750.0	791
9704 A /KG B	04.841.3250.0	791
9704 A /KG B	04.841.3250.0	598
9704 A /KG B	04.841.3250.0	395
9704 A /KK B	04.841.5850.0	395
9704 A /KK B	04.841.5850.0	791
9704 A /LG B	04.841.3350.0	791
9704 A /LG B	04.841.3350.0	598

contents

Type	Part no.	section / page
9704 A /LG B	04.841.3350.0	395
9704 A /LK B	04.841.5950.0	395
9704 A /LK B	04.841.5950.0	791
9704 A /MG B	04.841.3450.0	791
9704 A /MG B	04.841.3450.0	395
9704 A /MG B	04.841.3450.0	598
9704 A /MK B	04.841.6050.0	599
9704 A /MK B	04.841.6050.0	791
9704 A /MK B	04.841.6050.0	395
9704 A /NG B	04.841.3550.0	791
9704 A /NG B	04.841.3550.0	395
9704 A /NG B	04.841.3550.0	598
9704 A /NK B	04.841.6150.0	395
9704 A /NK B	04.841.6150.0	791
9704 A /NK B	04.841.6150.0	599
9704 A /OG B	04.841.3650.0	598
9704 A /OG B	04.841.3650.0	791
9704 A /OG B	04.841.3650.0	395
9704 A /OK B	04.841.6250.0	599
9704 A /OK B	04.841.6250.0	395
9704 A /OK B	04.841.6250.0	791
9704 A /PG B	04.841.3750.0	395
9704 A /PG B	04.841.3750.0	791
9704 A /PG B	04.841.3750.0	598
9704 A /PK B	04.841.6350.0	395
9704 A /PK B	04.841.6350.0	791
9704 A /PK B	04.841.6350.0	599
9704 A /QG B	04.841.3850.0	598
9704 A /QG B	04.841.3850.0	791
9704 A /QG B	04.841.3850.0	395
9704 A /QK B	04.841.6450.0	791
9704 A /QK B	04.841.6450.0	395
9704 A /QK B	04.841.6450.0	599
9704 A /RG B	04.841.3950.0	395
9704 A /RG B	04.841.3950.0	598
9704 A /RG B	04.841.3950.0	791
9704 A /RK B	04.841.6550.0	395
9704 A /RK B	04.841.6550.0	791
9704 A /RK B	04.841.6550.0	599
9704 A /SG B	04.841.4050.0	791
9704 A /SG B	04.841.4050.0	598
9704 A /SG B	04.841.4050.0	395
9704 A /SK B	04.841.6650.0	395
9704 A /SK B	04.841.6650.0	791
9704 A /SK B	04.841.6650.0	599
9704 A /TG B	04.841.4150.0	598
9704 A /TG B	04.841.4150.0	395
9704 A /TG B	04.841.4150.0	791
9704 A /TK B	04.841.6750.0	791
9704 A /TK B	04.841.6750.0	395
9704 A /TK B	04.841.6750.0	599
9704 A /UG B	04.841.4250.0	395
9704 A /UG B	04.841.4250.0	598
9704 A /UG B	04.841.4250.0	791
9704 A /UK B	04.841.6850.0	791
9704 A /UK B	04.841.6850.0	395
9704 A /UK B	04.841.6850.0	599
9704 A /VG B	04.841.4350.0	598
9704 A /VG B	04.841.4350.0	791
9704 A /VG B	04.841.4350.0	395
9704 A /VK B	04.841.6950.0	791
9704 A /VK B	04.841.6950.0	395
9704 A /VK B	04.841.6950.0	599
9704 A /WG B	04.841.4450.0	395
9704 A /WG B	04.841.4450.0	791
9704 A /WG B	04.841.4450.0	598
9704 A /WK B	04.841.7050.0	599
9704 A /WK B	04.841.7050.0	395
9704 A /WK B	04.841.7050.0	791
9704 A /XG B	04.841.4550.0	395
9704 A /XG B	04.841.4550.0	598
9704 A /XG B	04.841.4550.0	791
9704 A /XK B	04.841.7150.0	395
9704 A /XK B	04.841.7150.0	791
9704 A /XK B	04.841.7150.0	599
9704 A /YG B	04.841.4650.0	598
9704 A /YG B	04.841.4650.0	791
9704 A /YG B	04.841.4650.0	395
9704 A /YK B	04.841.7250.0	395
9704 A /YK B	04.841.7250.0	599
9704 A /YK B	04.841.7250.0	791
9704 A /ZG B	04.841.4750.0	395
9704 A /ZG B	04.841.4750.0	791
9704 A /ZG B	04.841.4750.0	598
9704 A /ZK B	04.841.7350.0	599
9704 A /ZK B	04.841.7350.0	791
9704 A /ZK B	04.841.7350.0	395
9705 A	04.242.0850.0	588
9705 A	04.242.0850.0	321
9705 A	04.242.0850.0	90
9705 A	04.242.0850.0	790
9705 A / 4 W	04.242.2853.0	790
9705 A / 5 / 10	04.242.5053.0	349
9705 A / 5 / 10	04.242.5053.0	91
9705 A / 5 / 10	04.242.5053.0	596
9705 A / 5 / 10	04.242.5053.0	790
9705 A / 5 / 10 / 5 B	04.842.5553.0	596
9705 A / 5 / 10 / 5 B	04.842.5553.0	394
9705 A / 5 / 10 / 5 B	04.842.5553.0	55
9705 A / 5 / 10 B	04.842.5053.0	790
9705 A / 5 / 10 B	04.842.5053.0	55
9705 A / 5 / 10 B	04.842.5053.0	349
9705 A / 5 / 10 B	04.842.5053.0	596
9705 A / 5 /10/11MARCOM	Z4.242.5053.0	49
9705 A / 6 / 10	04.242.6053.0	91
9705 A / 6 / 10 / 5 B	04.842.6553.0	69
9705 A / 6 / 10 B	04.842.6053.0	69
9705 A / 6 /10/11MARCOM	Z4.242.6053.0	49
9705 A / 6,7/6-90GRAD	04.242.3053.0	790
9705 A / 6,7/6-90GRAD 5	04.242.3453.0	790
9705 A / 6,7/6-90GRAD 8	04.242.3553.0	790
9705 A / 6,7/6-90GRAD12	04.242.3653.0	790
9705 A / 6.7/9-90GRAD 3	04.242.3353.0	790
9705 A / 7,5 / 10	04.242.7553.0	351
9705 A / 7,5 / 10 B	04.842.7553.0	351
9705 A / 8 / 10	04.242.8053.0	201
9705 A / 8 / 10 / 5 B	04.842.8553.0	91
9705 A / 8 / 10 B	04.842.8053.0	189
9705 A B	04.842.0850.0	588
9705 A B	04.842.0850.0	90
9705 A B	04.842.0850.0	321
9705 A B	04.842.0850.0	790
9705 A L / 5/ 10	04.242.5153.0	596
9705 A L / 5/ 10	04.242.5153.0	790
9705 A L / 5/ 10	04.242.5153.0	394
9705 A L / 5/ 10	04.242.5153.0	91
9705 A L / 5/ 10 B	04.842.5153.0	790
9705 A L / 6/ 10	04.242.6353.0	91
9705 AL	04.242.1553.0	410
9705 AL	04.242.1553.0	90
9705 AL	04.242.1553.0	394
9705 AL	04.242.1553.0	790
9705 AL B	04.842.1553.0	394
9705 AL B	04.842.1553.0	596
9705 AL B	04.842.1553.0	790
9705 AL B	04.842.1553.0	90
9705 AL/ 5 /10/ 6MARCOM	Z4.242.5153.0	442
9705 AL/ 5 /10/ 6MARCOM	Z4.242.5153.0	49
9705A/5/ 9 B 1- 9	04.842.4953.0	596
9705A/5/ 9 B 1- 9	04.842.4953.0	394
9705A/5/ 9 B 1- 9	04.842.4953.0	91
9705A/5/10 B 1- 10	04.845.0153.0	91
9705A/5/10 B 11- 20	04.845.0253.0	91
9705A/5/10 B 21- 30	04.845.0353.0	91
9705A/5/10 B 31- 40	04.845.0453.0	91
9705A/5/10 B 41- 50	04.845.0553.0	91
9705A/5/10 B 51- 60	04.845.0653.0	91
9705A/5/10 B 61- 70	04.845.0753.0	91
9705A/5/10 B 71- 80	04.845.0853.0	91
9705A/5/10 B 81- 90	04.845.0953.0	91
9705A/5/10 B 91-100	04.845.1053.0	91
9705A/5/10 B +	04.855.0253.0	91
9705A/5/10 B + ROT	04.855.0253.5	120
9705A/5/10 B -	04.855.0353.0	91
9705A/5/10 B - BLAU	04.855.0353.6	120
9705A/5/10B ERDZ	04.855.0153.0	91
9705A/5/10B F1	04.855.0953.0	91
9705A/5/10B F2	04.855.1053.0	91
9705A/5/10B L1	04.855.0453.0	91
9705A/5/10B L1L2L3NPE..	04.855.0853.0	91
9705A/5/10B L2	04.855.0553.0	91
9705A/5/10B L3	04.855.0653.0	91
9705A/5/10B N	04.855.3253.0	91
9705A/5/10B PE	04.855.0753.0	91
9705A/5/10B SL	04.855.3153.0	91
9705A/5/10B SLZ	04.855.0053.0	91
9705A/6,7/ 12	04.242.6753.0	790
9705A/6,7/ 12 B	04.842.6753.0	790
9705A/6,7/ 12 B 1- 9	99.000.0920.8	790
9705A/6,7/ 12 B 1-10	99.003.0920.8	790
9705A/6,7/2X 6 B 1- 6	99.002.0920.8	790
9705A/6,7/2X12 B 1-16	99.004.0920.8	790
9705A/6,7/2X12 B 1-24	99.005.0920.8	790
9705A/6/ 9 B 1- 9	04.842.5953.0	91
9705A/6/10 B 1- 10	04.846.0153.0	91
9705A/6/10 B 11- 20	04.846.0253.0	91
9705A/6/10 B 21- 30	04.846.0353.0	91
9705A/6/10 B 31- 40	04.846.0453.0	91
9705A/6/10 B 41- 50	04.846.0553.0	91
9705A/6/10 B 51- 60	04.846.0653.0	91
9705A/6/10 B 61- 70	04.846.0753.0	91
9705A/6/10 B 71- 80	04.846.0853.0	91
9705A/6/10 B 81- 90	04.846.0953.0	91
9705A/6/10 B 91-100	04.846.1053.0	91
9705A/6/10 B ERDZ	04.856.0153.0	91
9705A/6/10 B L1	04.856.0453.0	19
9705A/6/10 B L2	04.856.0553.0	91
9705A/6/10 B L3	04.856.0653.0	91
9705A/6/10 B SLZ	04.856.0053.0	91
9705A/6/10B +	04.856.0253.0	91
9705A/6/10B -	04.856.0353.0	91
9705A/6/10B F1	04.856.0953.0	91
9705A/6/10B F2	04.856.1053.0	91
9705A/6/10B L1L2L3NPE..	04.856.0853.0	91
9705A/6/10B N	04.856.3253.0	91
9705A/6/10B PE	04.856.0753.0	91
9705A/6/10B SL	04.856.3153.0	91
9705A/8/ 9 B 1- 9	04.842.7953.0	201
9705A/8/10 B 1- 10	04.848.0153.0	201
9705A/8/10 B 11- 20	04.848.0253.0	201
9705A/8/10 B 21- 30	04.848.0353.0	201
9705A/8/10 B 31- 40	04.848.0453.0	201
9705A/8/10 B 41- 50	04.848.0553.0	201
9705A/8/10 B 51- 60	04.848.0653.0	201
9705A/8/10 B 61- 70	04.848.0753.0	201
9705A/8/10 B 71- 80	04.848.0853.0	201
9705A/8/10 B 81- 90	04.848.0953.0	201
9705A/8/10 B 91-100	04.848.1053.0	201
9705A/8/10B +	04.858.0253.0	201
9705A/8/10B -	04.858.0353.0	201
9705A/8/10B ERDZ	04.858.0153.0	201
9705A/8/10B F1	04.858.0953.0	201
9705A/8/10B F2	04.858.1053.0	201
9705A/8/10B L1	04.858.0453.0	201
9705A/8/10B L1L2L3NPE..	04.858.0853.0	201
9705A/8/10B L2	04.858.0553.0	201
9705A/8/10B L3	04.858.0653.0	201
9705A/8/10B N	04.858.3253.0	201
9705A/8/10B PE	04.858.0753.0	201
9705A/8/10B SL	04.858.3153.0	201
9705A/8/10B SLZ	04.858.0053.0	201
9708	Z5.522.7053.0	102
9708 / 2 S 35	Z5.522.8553.0	19
9708 / 2 S 35	Z5.522.8553.0	410
9708 / 2 S 35	Z5.522.8553.0	308
9708 / 3 S35	Z5.523.5153.0	173
9760 U/8 TKE 48 V/V0	57.110.1655.0	133
9760 U/8 TKE 220 V/V0	57.110.1555.0	133
9785U/1 KOHM-SPT/V0	57.904.4655.0	130
9785U/1 KOHM/V0	57.904.0655.0	130
9785U/10 KOHM-SPT/V0	57.904.4955.0	130
9785U/10 KOHM/V0	57.904.0955.0	130
9785U/10 OHM-SPT/V0	57.904.3955.0	130
9785U/10 OHM/V0	57.904.0055.0	130
9785U/100 OHM-SPT/V0	57.904.4355.0	130
9785U/100 OHM/V0	57.904.0355.0	130
9785U/2 KOHM-SPT/V0	57.904.4755.0	130
9785U/2 KOHM/V0	57.904.0755.0	130
9785U/20 KOHM-SPT/V0	57.904.5055.0	130
9785U/20 KOHM/V0	57.904.1055.0	130
9785U/20 OHM-SPT/V0	57.904.4155.0	130
9785U/20 OHM/V0	57.904.0155.0	130
9785U/200 OHM-SPT/V0	57.904.4455.0	130
9785U/200 OHM/V0	57.904.0455.0	130
9785U/5 KOHM-SPT/V0	57.904.4855.0	130
9785U/5 KOHM/V0	57.904.0855.0	130
9785U/50 KOHM-SPT/V0	57.904.5155.0	130
9785U/50 KOHM/V0	57.904.1155.0	130
9785U/50 OHM-SPT/V0	57.904.4255.0	130
9785U/50 OHM/V0	57.904.0255.0	130
9785U/500 OHM-SPT/V0	57.904.4555.0	130
9785U/500 OHM/V0	57.904.0555.0	130
9786U/12/V0	57.904.2055.0	131
9786U/TSK CU-CUNI/V0	57.904.7355.0	132
9786U/TSK E-CU-A-CU/V0	57.904.7455.0	132
9786U/TSK FE-CUNI/V0	57.904.7155.0	132
9786U/TSK NICR-CUNI/V0	57.904.7055.0	132
9786U/TSK NICR-NI/V0	57.904.7255.0	132
9813 M 10X 3 1000MM	98.290.0000.0	72
9813 M SN 10X3 1000MM	98.290.1000.0	24
A BIS Z GB	04.841.9150.0	791
A BIS Z GB	04.841.9150.0	395
A BIS Z GB	04.841.9150.0	181
A BIS Z KB	04.841.9250.0	395
A BIS Z KB	04.841.9250.0	181
A BIS Z KB	04.841.9250.0	791
ABDECKG M WARNZCH	04.343.5356.8	105
ABDECKG M WARNZCH	04.343.5456.8	105
ABDECKG.M.WARNZCH	04.325.1056.0	189
ABDECKG.M.WARNZCH	04.325.1156.0	189
ABDECKG.M.WARNZCH	04.325.1256.0	189
ABDECKG.M.WARNZCH	04.325.1356.0	191
ABDECKG.M.WARNZCH	04.325.1456.0	189
ABDECKG.M.WARNZCH	04.325.1656.0	189
ABDECKG.M.WARNZCH	04.343.4756.8	102
ABDECKG.M.WARNZCH	04.343.4856.8	69
ABDECKG.M.WARNZCH	04.343.4956.8	103
ABDECKG.M.WARNZCH	04.343.5056.8	103
ABDECKG.M.WARNZCH	04.343.5156.8	104
ABDECKG.M.WARNZCH	04.343.5256.8	105
ABDECKG.M.WARNZCH	04.343.9156.8	312
ABDECKG.M.WARNZCH	04.343.9156.8	134
ABDECKPLATTE 10	07.416.6953.0	784
ABDECKPLATTE 16	07.416.7053.0	784
ABDECKPLATTE 24	07.416.7153.0	784
ABDECKPLATTE 6	07.416.6853.0	784
ABDECKSTREIFEN	04.343.9056.8	312
ABDECKSTREIFEN	04.343.9056.8	134
ABDECKUNG	04.312.0554.0	584
ABDECKUNG	04.312.0654.0	584
ABDECKUNG	04.312.2056.0	125
ABDECKUNG	04.312.3054.0	585
ABDECKUNG	04.312.3254.0	587
ABDECKUNG	04.312.3354.0	585
ABDECKUNG	04.312.3454.0	586
ABDECKUNG	04.312.3554.0	587
ABDECKUNG	04.326.0056.0	152
ABDECKUNG	04.326.1053.0	128
ABDECKUNG	04.343.6853.8	308
ABDECKUNG	04.343.6853.8	36
ABDECKUNG	04.343.8353.8	33
ABDECKUNG	Z7.409.5753.0	156
ABDECKUNG	Z7.409.5853.0	158
ABISOLIERZANGE	95.350.0100.0	799
ABSCHLUSSPL.M.BEZ	07.340.4153.0	152
ABSCHLUSSPL.M.BEZ	07.340.4353.0	152
ABSCHLUSSPLATTE	07.310.8453.0	584
ABSCHLUSSPLATTE	07.310.8553.0	584
ABSCHLUSSPLATTE	07.310.9653.0	591
AD VB 2,5 GELB	04.326.2053.8	312
AD VB 2,5 GELB	04.326.2053.8	101
AD VB 4 GELB	04.326.2153.8	78
AD VB 4 / 15 GELB	04.326.2953.8	114
AD VB 5 / 10	04.342.0556.0	120
AD VB 5 / 10 GELB	04.342.0556.8	116
AD VB 5 / 10 P GELB	04.342.3556.8	312
AD VB 5 / 10 P GELB	04.342.3556.8	102
AD VB 6 / 10 E GELB	04.342.2656.8	114
AD VB 6 / 10 E P GELB	04.342.5656.8	174
AD VB 6 GELB	04.326.2253.8	103
AD VB 6/10 GELB	04.342.0656.8	112

contents of
type description

contents TYPE

Type	Part no.	section / page
AD VB 6/10 P GELB	04.342.3656.8	103
AD VB 8/10 P GELB	04.342.3856.8	103
AD VB 10 GELB	04.326.2353.8	82
AD VB 10/10 GELB	04.342.1056.8	78
AD VB 10/10 P GELB	04.342.4056.8	103
AD VB 16 GELB	04.326.2453.8	69
AD VB 35 GELB	04.326.2553.8	105
AD VB 70 GELB	04.326.2653.8	105
AD VB WKM 2,5 / 15 GELB	04.326.3053.8	144
AD VM-1,5/8 SCHWARZ	04.343.8053.0	45
ADA.I.GEH. 3WR	70.965.0353.4	671
ADA.I.GEH.BU. 3WL	70.960.0353.3	671
ADA.I.GEH.BU. 3WL	70.960.0353.4	671
ADA.I.GEH.BU. 3WL	71.960.0353.3	671
ADA.I.GEH.BU. 3WL	71.960.0353.4	671
ADA.I.GEH.BU. 3WR	70.965.0353.3	671
ADA.I.GEH.BU. 3WR	71.965.0353.3	671
ADA.I.GEH.BU. 3WR	71.965.0353.4	671
ADA.I.GEH.BU. 6WL	70.940.0653.3	667
ADA.I.GEH.BU. 6WL	70.960.0653.3	671
ADA.I.GEH.BU. 6WL	70.960.0653.4	671
ADA.I.GEH.BU. 6WL	71.960.0653.3	671
ADA.I.GEH.BU. 6WL	71.960.0653.4	671
ADA.I.GEH.BU. 6WL	72.940.0653.0	669
ADA.I.GEH.BU. 6WR	70.945.0653.3	667
ADA.I.GEH.BU. 6WR	70.945.0653.4	667
ADA.I.GEH.BU. 6WR	70.965.0653.3	671
ADA.I.GEH.BU. 6WR	70.965.0653.4	671
ADA.I.GEH.BU. 6WR	71.965.0653.4	671
ADA.I.GEH.BU. 6WR	72.945.0653.0	669
ADA.I.GEH.BU.06WL	70.940.0653.4	667
ADA.I.GEH.BU.10WL	70.940.1053.3	667
ADA.I.GEH.BU.10WL	70.940.1053.4	667
ADA.I.GEH.BU.10WL	70.960.1053.3	671
ADA.I.GEH.BU.10WL	70.960.1053.4	671
ADA.I.GEH.BU.10WL	70.965.1053.4	671
ADA.I.GEH.BU.10WL	71.940.1053.3	667
ADA.I.GEH.BU.10WL	71.940.1053.4	667
ADA.I.GEH.BU.10WL	71.960.1053.3	671
ADA.I.GEH.BU.10WL	71.960.1053.4	671
ADA.I.GEH.BU.10WL	72.940.1053.0	669
ADA.I.GEH.BU.10WL	77.940.1053.0	669
ADA.I.GEH.BU.10WR	70.945.1053.3	667
ADA.I.GEH.BU.10WR	70.945.1053.4	667
ADA.I.GEH.BU.10WR	70.965.1053.3	671
ADA.I.GEH.BU.10WR	71.945.1053.3	667
ADA.I.GEH.BU.10WR	71.945.1053.4	667
ADA.I.GEH.BU.10WR	71.965.1053.4	671
ADA.I.GEH.BU.10WR	72.945.1053.0	669
ADA.I.GEH.BU.10WR	77.945.1053.0	669
ADA.I.GEH.BU.16WL	70.940.1653.3	667
ADA.I.GEH.BU.16WL	70.940.1653.4	667
ADA.I.GEH.BU.16WL	71.940.1653.3	667
ADA.I.GEH.BU.16WL	71.940.1653.4	667
ADA.I.GEH.BU.16WL	72.940.1653.0	669
ADA.I.GEH.BU.16WL	77.940.1653.0	669
ADA.I.GEH.BU.16WR	70.945.1653.3	667
ADA.I.GEH.BU.16WR	70.945.1653.4	667
ADA.I.GEH.BU.16WR	71.945.1653.3	667
ADA.I.GEH.BU.16WR	71.945.1653.4	667
ADA.I.GEH.BU.16WR	72.945.1653.0	669
ADA.I.GEH.BU.16WR	77.945.1653.0	669
ADA.I.GEH.BU.24WL	70.940.2453.3	667
ADA.I.GEH.BU.24WL	70.940.2453.4	667
ADA.I.GEH.BU.24WL	71.940.2453.3	667
ADA.I.GEH.BU.24WL	71.940.2453.4	667
ADA.I.GEH.BU.24WL	72.940.2453.0	669
ADA.I.GEH.BU.24WL	77.940.2453.0	669
ADA.I.GEH.BU.24WR	70.945.2453.3	667
ADA.I.GEH.BU.24WR	70.945.2453.4	667
ADA.I.GEH.BU.24WR	71.945.2453.3	667
ADA.I.GEH.BU.24WR	71.945.2453.4	667
ADA.I.GEH.BU.24WR	72.945.2453.0	669
ADA.I.GEH.BU.24WR	77.945.2453.0	669
ADA.I.GEH.ST. 3WL	70.970.0353.3	671
ADA.I.GEH.ST. 3WL	71.970.0353.4	671
ADA.I.GEH.ST. 3WR	70.975.0353.3	671
ADA.I.GEH.ST. 3WR	70.975.0353.4	671
ADA.I.GEH.ST. 3WR	71.975.0353.4	671
ADA.I.GEH.ST. 6WL	70.950.0653.3	667
ADA.I.GEH.ST. 6WL	70.970.0653.3	671
ADA.I.GEH.ST. 6WL	70.970.0653.4	671
ADA.I.GEH.ST. 6WL	71.970.0653.3	671
ADA.I.GEH.ST. 6WL	71.970.0653.4	671
ADA.I.GEH.ST. 6WL	72.950.0653.0	669
ADA.I.GEH.ST. 6WR	70.955.0653.3	667
ADA.I.GEH.ST. 6WR	70.955.0653.4	667
ADA.I.GEH.ST. 6WR	70.975.0653.3	671
ADA.I.GEH.ST. 6WR	70.975.0653.4	671
ADA.I.GEH.ST. 6WR	71.975.0653.3	671
ADA.I.GEH.ST. 6WR	71.975.0653.4	671
ADA.I.GEH.ST. 6WR	72.955.0653.0	669
ADA.I.GEH.ST.06WL	70.950.0653.4	667
ADA.I.GEH.ST.10WL	70.950.1053.3	667
ADA.I.GEH.ST.10WL	70.950.1053.4	667
ADA.I.GEH.ST.10WL	70.970.1053.3	671
ADA.I.GEH.ST.10WL	70.970.1053.4	671
ADA.I.GEH.ST.10WL	71.950.1053.3	667
ADA.I.GEH.ST.10WL	71.950.1053.4	667
ADA.I.GEH.ST.10WL	71.970.1053.3	671
ADA.I.GEH.ST.10WL	71.970.1053.4	671
ADA.I.GEH.ST.10WL	72.950.1053.0	669
ADA.I.GEH.ST.10WL	77.950.1053.0	669
ADA.I.GEH.ST.10WR	70.955.1053.3	667
ADA.I.GEH.ST.10WR	70.955.1053.4	667
ADA.I.GEH.ST.10WR	70.975.1053.3	671
ADA.I.GEH.ST.10WR	70.975.1053.4	671

Type	Part no.	section / page
ADA.I.GEH.ST.10WR	71.955.1053.3	667
ADA.I.GEH.ST.10WR	71.955.1053.4	667
ADA.I.GEH.ST.10WR	71.975.1053.3	671
ADA.I.GEH.ST.10WR	71.975.1053.4	671
ADA.I.GEH.ST.10WR	72.955.1053.0	669
ADA.I.GEH.ST.10WR	77.955.1053.0	669
ADA.I.GEH.ST.16WL	70.950.1653.3	667
ADA.I.GEH.ST.16WL	70.950.1653.4	667
ADA.I.GEH.ST.16WL	71.950.1653.3	667
ADA.I.GEH.ST.16WL	71.950.1653.4	667
ADA.I.GEH.ST.16WL	72.950.1653.0	669
ADA.I.GEH.ST.16WL	77.950.1653.0	669
ADA.I.GEH.ST.16WR	70.955.1653.3	667
ADA.I.GEH.ST.16WR	70.955.1653.4	667
ADA.I.GEH.ST.16WR	71.955.1653.3	667
ADA.I.GEH.ST.16WR	71.955.1653.4	667
ADA.I.GEH.ST.16WR	72.955.1653.0	669
ADA.I.GEH.ST.16WR	72.955.1653.4	669
ADA.I.GEH.ST.16WR	77.955.1653.0	669
ADA.I.GEH.ST.24WL	70.950.2453.3	667
ADA.I.GEH.ST.24WL	70.950.2453.4	667
ADA.I.GEH.ST.24WL	71.950.2453.3	667
ADA.I.GEH.ST.24WL	71.950.2453.4	667
ADA.I.GEH.ST.24WL	72.950.2453.0	669
ADA.I.GEH.ST.24WL	77.950.2453.0	669
ADA.I.GEH.ST.24WR	70.955.2453.3	667
ADA.I.GEH.ST.24WR	70.955.2453.4	667
ADA.I.GEH.ST.24WR	71.955.2453.3	667
ADA.I.GEH.ST.24WR	71.955.2453.4	667
ADA.I.GEH.ST.24WR	72.955.2453.0	669
ADA.I.GEH.ST.24WR	77.955.2453.0	669
ADA.I:GEH.ST. 3WL	70.970.0353.4	671
ADC 2,5 GELB	04.344.0353.8	231
ADF 2,5/4 GELB	04.343.6053.8	308
ADF 2,5/4 GELB	04.343.6053.8	20
ADF 4/4 GELB	04.343.6153.8	19
ADF 6/4 GELB	04.343.6253.8	21
ADF10/4 GELB	04.343.6453.8	21
ADF16/4 GELB	04.343.6653.8	21
AEI 1,5Z-N	05.599.2027.0	797
AKB 10 V / 20MA	57.806.0053.0	504
AKB 10 V /4-20MA	57.806.1553.0	504
AKB 20MA / 10 V	57.806.0253.0	504
AKB 4-20MA / 10 V	57.806.0353.0	504
AKT 10 V /4-20MA	57.806.0953.0	505
AKT 10 V / 20MA	57.806.0653.0	505
AKT 20MA / 10 V	57.806.0753.0	505
AKT 20MA / 20MA	57.806.1153.0	505
AKT 20MA /4-20MA	57.806.1253.0	505
AKT 0-10 V /-+10 V	57.806.2653.0	505
AKT 0-20MA /-+10 V	57.806.2753.0	505
AKT 4-20MA / 10 V	57.806.0853.0	505
AKT 4-20MA / 20MA	57.806.1353.0	505
AKT 4-20MA /-+10 V	57.806.5553.0	505
AKT +- 10 V /+-10 V	57.806.1053.0	505
AKT -+ 10 V /0-10 V	57.806.2253.0	505
AKT -+ 10 V /4-20MA	57.806.2153.0	505
AM 5 X 12 D 933SZMS	06.065.0021.0	156
ANKERSCHIENE 2M	98.400.0000.0	210
AP 2,5 - 4 /V0	07.311.0155.0	78
AP 2,5 - 4 BL/V0	07.311.0155.6	78
AP 2,5 U/8113 S/V /V0	07.312.1555.0	136
AP 2,5 U/8113 S/V /V0	07.312.1555.0	310
AP 4 TK /V0	07.311.6155.0	122
AP 4 TK BL /V0	07.311.6155.6	123
AP 6 /V0	07.311.0255.0	103
AP 6 BL/V0	07.311.0255.6	103
AP 1 - 2,5	07.312.5053.0	232
AP 1 - 2,5 BLAU	07.312.5053.6	232
AP 1 - 2,5 GRUEN	07.312.5053.7	233
AP 10/SI /V0	07.311.4155.0	125
AP 2,5 U/8113 S/V BL/V0	07.312.1555.6	137
AP 2,5 U/D/8113 S/V/V0	07.311.9055.0	134
AP 2,5 U/D/8113 S/V/V0	07.311.9055.0	312
AP 2,5-4 KO/V0	07.310.9355.0	120
AP 2,5U/8113../V0	07.312.4655.0	136
AP 2,5U/8113../V0	07.312.4655.0	310
AP 2,5U/8113S/H/V0	07.311.9855.0	311
AP 3 S / IW/V0	07.311.4555.0	140
AP 3 S/V0	07.311.4455.0	140
AP 4 3S 1K / V0	07.311.3855.0	138
AP 4 E /V0	07.311.4055.0	114
AP 4 S / IW/V0	07.311.4355.0	141
AP 4 S/V0	07.311.4255.0	141
AP 4/D /V0	07.311.6355.0	112
AP 4/D BL /V0	07.311.6355.6	112
AP 5 S/V0	07.311.4655.0	139
AP 8113 SE	07.310.9853.0	303
AP 8185 TOP N	07.300.4753.0	349
AP2,5U/D/8113 S/V BL/V0	07.311.9055.6	313
AP4 /D1 /2 /V0	07.311.6455.0	112
APC 1-2,5 D 2./E. BLAU	07.312.5453.6	236
APC 1-2,5 D 2./E. GRUEN	07.312.5453.7	237
APC 1-2,5 D./TK.	07.312.5253.0	234
APC 1-2,5 D./TK. BLAU	07.312.5253.6	234
APC 1-2,5 D./TK.GRUEN	07.312.5253.7	235
APC 1-2,5 D2./E.	07.312.5453.0	231
APF 1,5 E	07.312.3553.0	33
APF 2,5 - 4	07.312.2153.0	20
APF 2,5 - 4 BLAU	07.312.2153.6	20
APF 2,5 - 4 GRUEN	07.312.2153.7	22
APF 2,5/D 1/2	07.312.2353.0	26
APF 2,5/D 1/2 BLAU	07.312.2353.6	26
APF 2,5/D 1/2 GRUEN	07.312.2353.7	28
APF 2,5/D 2/2	07.312.2553.0	26
APF 2,5/D 2/2 BLAU	07.312.2553.6	26
APF 2,5/D 2/2 GRUEN	07.312.2553.7	28

Type	Part no.	section / page
APF 2,5/D2 /8113	07.312.4153.0	308
APF 2,5/D2 /8113	07.312.4153.0	36
APF 2,5/d2/8113 BLAU	07.312.4153.6	36
APF 2,5/d2/8113 BLAU	07.312.4153.6	308
APF 4 E	07.312.5753.0	30
APF 4 E GRUEN	07.312.5753.7	31
APF 4 NT	07.312.5653.0	24
APF 4 TK	07.312.2853.0	38
APF 4 TK.	07.312.4353.0	39
APF4/D1/2	07.312.4853.0	27
APF4/D1/2 BLAU	07.312.4853.6	27
APF4/D1/2 GRUEN	07.312.4853.7	29
API 10 - 16 BLAU/V0	07.311.9455.6	78
API 10 - 16 SL/V0	07.311.9555.0	82
API 10 - 16/V0	07.311.9455.0	78
API 10-16 ETK/1/V0	07.312.1955.0	80
API 35 BLAU/V0	07.311.8855.6	79
API 35/V0	07.311.8855.0	79
API 4/2/V0	07.311.6555.0	69
API 4/3/V0	07.311.6855.0	74
APIF 2,5	07.311.8353.0	58
APM 2,5 - 4 / 15	07.311.0853.0	145
APM 2,5 - 4 / 15 BLAU	07.311.0853.6	145
APM 2,5 F. / 15	07.311.0653.0	144
APM 4 SL / 15	07.311.0753.0	145
APN 4ETK /V0	07.312.1155.0	106
APN 10 /V0	07.311.6655.0	103
APN 10 BL/V0	07.311.6655.6	103
APN 10ETK /V0	07.312.0955.0	106
APN 16 /V0	07.311.6755.0	104
APN 16 BL/V0	07.311.6755.6	104
APN 16ETK /V0	07.312.0855.0	107
APN2,5E	07.312.1755.0	116
AUSDRUECKWERKZEUG	05.502.0200.0	207
B EXP.BOARD WEG 6 POL	Z8.000.0123.1	592
BEF.HALTER	05.522.7356.0	331
BEF.HALTER	05.522.7756.0	331
BEF.HALTER	05.522.7856.0	331
BEF.HALTER	05.593.8853.0	331
BEF.HALTER	05.599.2853.0	331
BEF.HALTER	05.599.2953.0	331
BEF.HALTER	Z5.523.2453.0	297
BEF.HALTER	Z5.523.7753.0	295
BEF.HALTER	Z5.523.7853.0	295
BEFEST.HALT.KOMPL	Z5.523.7653.0	319
BEZ.-SCHILD	04.240.0953.0	392
BEZ.BLATT PERF.	04.019.0289.0	47
BEZ.BLATT PERF.	04.019.0889.0	183
BEZ.KLAPPSCHILD	04.210.0652.0	183
BEZ.KLAPPSCHILD	04.210.0752.0	183
BEZ.KLAPPSCHILD	Z4.210.0652.0	183
BEZ.KLAPPSCHILD	Z4.210.1652.0	183
BEZ.PLATTE	04.249.1053.0	499
BEZ.PLATTE	04.249.1553.0	499
BEZ.PLATTE	04.249.2053.0	499
BEZ.PLATTE	04.249.4053.0	499
BEZ.PLATTE	07.340.2153.0	152
BEZ.PLATTE	07.340.2353.0	152
BEZ.SCHILDTRAEGER	04.242.3853.0	781
BEZ.SCHILDTRAEGER	04.242.4253.0	349
BEZ.SCHILDTRAEGER	04.242.4453.0	781
BEZ.SCHILDTRAEGER	04.242.4653.0	357
BEZ.SCHILDTRAEGER	04.242.5853.0	349
BEZ.SCHILDTRAEGER	Z4.242.3753.0	781
BEZ.SCHILDTRAEGER	Z4.242.4053.0	781
BEZEICHNUNGS-COMPUTER	95.502.0000.0	90
BGL-25VAC-2,5ADC	81.000.1000.0	526
BGL-40VAC-3ADC	87.230.2053.0	526
BK M 8 / 32	32.640.0042.0	152
BK M 10 / 32	32.650.0042.0	153
BK M 6 / 32	32.630.0042.0	152
BU 70,3 /24 REV	Z5.570.1356.0	675
BU 70.1 / 6 REV WL	Z5.572.0156.0	675
BU 70.1 / 6 REV WR	Z5.572.1156.0	675
BU 70.1 / 6 REV U WL	Z5.572.4156.0	675
BU 70.1 / 6 REV U WR	Z5.572.5156.0	675
BU 70.1 / 6 RV WL	Z5.572.2156.0	675
BU 70.1 / 6 RV WR	Z5.572.3156.0	675
BU 70.1 / 6 RV U WL	Z5.572.6156.0	675
BU 70.1 / 6 RV U WR	Z5.572.7156.0	675
BU 70.1 /10 REV WL	Z5.572.0256.0	675
BU 70.1 /10 REV WR	Z5.572.1256.0	675
BU 70.1 /10 REV U WL	Z5.572.4256.0	675
BU 70.1 /10 REV U WR	Z5.572.5256.0	675
BU 70.1 /10 RV WL	Z5.572.2256.0	675
BU 70.1 /10 RV WR	Z5.572.3256.0	675
BU 70.1 /10 RV U WL	Z5.572.6256.0	675
BU 70.1 /10 RV U WR	Z5.572.7256.0	675
BU 70.1 /16 REV WL	Z5.572.0056.0	675
BU 70.1 /16 REV WR	Z5.572.1056.0	675
BU 70.1 /16 REV U WL	Z5.572.4056.0	675
BU 70.1 /16 REV U WR	Z5.572.5056.0	675
BU 70.1 /16 RV WL	Z5.572.2056.0	675
BU 70.1 /16 RV WR	Z5.572.3056.0	675
BU 70.1 /16 RV U WL	Z5.572.6056.0	675
BU 70.1 /16 RV U WR	Z5.572.7056.0	675
BU 70.1 /24 REV WL	Z5.572.0356.0	675
BU 70.1 /24 REV WR	Z5.572.1356.0	675
BU 70.1 /24 REV U WL	Z5.572.4356.0	675
BU 70.1 /24 REV U WR	Z5.572.5356.0	675
BU 70.1 /24 RV WL	Z5.572.2356.0	675
BU 70.1 /24 RV WR	Z5.572.3356.0	675
BU 70.1 /24 RV U WL	Z5.572.6356.0	675
BU 70.1 /24 RV U WR	Z5.572.7356.0	675
BU 70.3 / 6 REV	Z5.570.1156.0	675
BU 70.3 / 6 REVZ	Z5.570.0156.0	675
BU 70.3 / 6 RV	Z5.570.3156.0	675

contents

Type	Part no.	section / page
BU 70.3 / 6 RVZ	Z5.570.2156.0	675
BU 70.3 /10 REV	Z5.570.1256.0	675
BU 70.3 /10 REVZ	Z5.570.0256.0	675
BU 70.3 /10 RV	Z5.570.3256.0	675
BU 70.3 /10 RVZ	Z5.570.2256.0	675
BU 70.3 /16 REV	Z5.570.1056.0	675
BU 70.3 /16 REVZ	Z5.570.0056.0	675
BU 70.3 /16 RV	Z5.570.3056.0	675
BU 70.3 /16 RVZ	Z5.570.2056.0	675
BU 70.3 /24 REVZ	Z5.570.0356.0	675
BU 70.3 /24 RV	Z5.570.3356.0	675
BU 70.3 /24 RVZ	Z5.570.2356.0	675
BU 70.7 / 6 REV	Z5.570.5156.0	677
BU 70.7 / 6 REVZ	Z5.570.4156.0	677
BU 70.7 / 6 RV	Z5.570.8656.0	677
BU 70.7 / 6 RVZ	Z5.570.6656.0	677
BU 70.7 /10 REV	Z5.570.5256.0	677
BU 70.7 /10 REVZ	Z5.570.4256.0	677
BU 70.7 /10 RV	Z5.570.8756.0	677
BU 70.7 /10 RVZ	Z5.570.6756.0	677
BU 70.7 /16 REV	Z5.570.5056.0	677
BU 70.7 /16 REVZ	Z5.570.4056.0	677
BU 70.7 /16 RV	Z5.570.8556.0	677
BU 70.7 /16 RVZ	Z5.570.6556.0	677
BU 70.7 /24 REV	Z5.570.5356.0	677
BU 70.7 /24 REVZ	Z5.570.4356.0	677
BU 70.7 /24 RV	Z5.570.8856.0	677
BU 70.7 /24 RVZ	Z5.570.6856.0	677
BU 72.1 / 6 REV WL	Z5.572.0656.0	679
BU 72.1 / 6 REV WR	Z5.572.1656.0	679
BU 72.1 / 6 REV U WL	Z5.572.4656.0	679
BU 72.1 / 6 REV U WR	Z5.572.5656.0	679
BU 72.1 / 6 RV WL	Z5.572.2656.0	679
BU 72.1 / 6 RV WR	Z5.572.3656.0	679
BU 72.1 / 6 RV U WL	Z5.572.6656.0	679
BU 72.1 / 6 RV U WR	Z5.572.7656.0	679
BU 72.1 /10 REV WL	Z5.572.0756.0	679
BU 72.1 /10 REV WR	Z5.572.1756.0	679
BU 72.1 /10 REV U WL	Z5.572.4756.0	679
BU 72.1 /10 REV U WR	Z5.572.5756.0	679
BU 72.1 /10 RV WL	Z5.572.2756.0	679
BU 72.1 /10 RV WR	Z5.572.3756.0	679
BU 72.1 /10 RV U WL	Z5.572.6756.0	679
BU 72.1 /10 RV U WR	Z5.572.7756.0	679
BU 72.1 /16 REV WL	Z5.572.0556.0	679
BU 72.1 /16 REV WR	Z5.572.1556.0	679
BU 72.1 /16 REV U WL	Z5.572.4556.0	679
BU 72.1 /16 REV U WR	Z5.572.5556.0	679
BU 72.1 /16 RV WL	Z5.572.2556.0	679
BU 72.1 /16 RV WR	Z5.572.3556.0	679
BU 72.1 /16 RV U WL	Z5.572.6556.0	679
BU 72.1 /16 RV U WR	Z5.572.7556.0	679
BU 72.1 /24 REV WL	Z5.572.0856.0	679
BU 72.1 /24 REV WR	Z5.572.1856.0	679
BU 72.1 /24 REV U WL	Z5.572.4856.0	679
BU 72.1 /24 REV U WR	Z5.572.5856.0	679
BU 72.1 /24 RV WL	Z5.572.2856.0	679
BU 72.1 /24 RV WR	Z5.572.3856.0	679
BU 72.1 /24 RV U WL	Z5.572.6856.0	679
BU 72.1 /24 RV U WR	Z5.572.7856.0	679
BU 72.3 / 6 REV	Z5.570.1656.0	679
BU 72.3 / 6 REVZ	Z5.570.0656.0	679
BU 72.3 / 6 RV	Z5.570.3656.0	679
BU 72.3 / 6 RVZ	Z5.570.2656.0	679
BU 72.3 /10 REV	Z5.570.1756.0	679
BU 72.3 /10 REVZ	Z5.570.0756.0	679
BU 72.3 /10 RV	Z5.570.3756.0	679
BU 72.3 /10 RVZ	Z5.570.2756.0	679
BU 72.3 /16 REV	Z5.570.1556.0	679
BU 72.3 /16 REVZ	Z5.570.0556.0	679
BU 72.3 /16 RV	Z5.570.3556.0	679
BU 72.3 /16 RVZ	Z5.570.2556.0	679
BU 72.3 /24 REV	Z5.570.1856.0	679
BU 72.3 /24 REVZ	Z5.570.0856.0	679
BU 72.3 /24 RV	Z5.570.3856.0	679
BU 72.3 /24 RVZ	Z5.570.2856.0	679
BU 72.7 / 6 REV	Z5.570.5656.0	681
BU 72.7 / 6 REVZ	Z5.570.4656.0	681
BU 72.7 / 6 RV	Z5.570.9656.0	681
BU 72.7 / 6 RVZ	Z5.570.7656.0	681
BU 72.7 /10 REV	Z5.570.5756.0	681
BU 72.7 /10 REVZ	Z5.570.4756.0	681
BU 72.7 /10 RV	Z5.570.9756.0	681
BU 72.7 /10 RVZ	Z5.570.7756.0	681
BU 72.7 /16 REV	Z5.570.5556.0	681
BU 72.7 /16 REVZ	Z5.570.4556.0	681
BU 72.7 /16 RV	Z5.570.9556.0	681
BU 72.7 /16 RVZ	Z5.570.7556.0	681
BU 72.7 /24 REV	Z5.570.5856.0	681
BU 72.7 /24 REVZ	Z5.570.4856.0	681
BU 72.7 /24 RV	Z5.570.9856.0	681
BU 72.7 /24 RVZ	Z5.570.7856.0	681
BU 73.1 /40 REV WL	Z5.572.8056.0	683
BU 73.1 /40 REV WR	Z5.572.8356.0	683
BU 73.1 /40 REV U WL	Z5.572.9156.0	683
BU 73.1 /40 REV U WR	Z5.572.9356.0	683
BU 73.1 /40 RV WL	Z5.572.8656.0	683
BU 73.1 /40 RV WR	Z5.572.8956.0	683
BU 73.1 /40 RV U WL	Z5.572.9556.0	683
BU 73.1 /40 RV U WR	Z5.572.9756.0	683
BU 73.1 /64 REV WL	Z5.572.8156.0	683
BU 73.1 /64 REV WR	Z5.572.8456.0	683
BU 73.1 /64 REV U WL	Z5.572.9256.0	683
BU 73.1 /64 REV U WR	Z5.572.9456.0	683
BU 73.1 /64 RV WL	Z5.572.8756.0	683
BU 73.1 /64 RV WR	Z5.572.9056.0	683
BU 73.1 /64 RV U WL	Z5.572.9656.0	683
BU 73.1 /64 RV U WR	Z5.572.9856.0	683
BU 73.7 /40 REV	Z5.570.7056.0	683
BU 73.7 /40 REVZ	Z5.570.6056.0	683
BU 73.7 /40 RV	Z5.570.9056.0	683
BU 73.7 /40 RVZ	Z5.570.8056.0	683
BU 73.7 /64 REV	Z5.570.7156.0	683
BU 73.7 /64 REVZ	Z5.570.6156.0	683
BU 73.7 /64 RV	Z5.570.9156.0	683
BU 73.7 /64 RVZ	Z5.570.8156.0	683
BU.EIG.ANL.	72.300.0653.9	767
BU.EIG.ANL.	72.300.1053.9	767
BU.EIG.ANL.	72.300.1653.9	767
BU.EIG.ANL.	72.300.2453.9	767
BU.EIG.ANL.	72.300.4853.9	767
BU.EINSATZ 3/3/6	72.203.1253.0	705
BU.EINSATZ 4/6	72.205.1053.0	699
BU.EINSATZ 6/6	72.205.1253.0	703
BU.EINSATZ 660V	70.400.0340.0	643
BU.EINSATZ 660V	70.400.0640.0	643
BU.EINSATZ 660V	70.400.1040.0	643
BU.EINSATZ 660V	70.400.1640.0	643
BU.EINSATZ 660V	70.400.2040.0	643
BU.EINSATZ 660V	70.400.2640.0	643
BU.EINSATZ 660V	70.400.3240.0	643
BU.EINSATZ VERGOL	70.301.0640.0	631
BU.EINSATZ VERGOL	70.301.1040.0	631
BU.EINSATZ VERGOL	70.301.1640.0	631
BU.EINSTAZ VERGOL	70.301.2440.0	631
BUCHSE D-SUB 9	87.200.2200.3	560
BUCHSE D-SUB 15	87.200.2201.3	560
BUCHSE D-SUB 25	87.200.2202.3	560
BUCHSE D-SUB 37	87.200.2203.3	560
BUCHSE D-SUB 50	87.200.2204.3	560
BUCHSENEINSATZ	70.200.0653.0	689
BUCHSENEINSATZ	70.300.0640.0	631
BUCHSENEINSATZ	70.300.1040.0	631
BUCHSENEINSATZ	70.300.1640.0	631
BUCHSENEINSATZ	70.300.2440.0	631
BUCHSENEINSATZ	70.300.3253.0	631
BUCHSENEINSATZ	70.300.4840.0	631
BUCHSENEINSATZ	70.500.0653.0	631
BUCHSENEINSATZ	70.500.1053.0	631
BUCHSENEINSATZ	70.500.1653.0	631
BUCHSENEINSATZ	70.500.2453.0	631
BUCHSENEINSATZ	70.500.3253.0	631
BUCHSENEINSATZ	70.500.4853.0	631
BUCHSENEINSATZ	70.700.0658.0	631
BUCHSENEINSATZ	70.700.1058.0	631
BUCHSENEINSATZ	70.700.1658.0	631
BUCHSENEINSATZ	70.700.2458.0	631
BUCHSENEINSATZ	70.700.3253.0	631
BUCHSENEINSATZ	70.700.4858.0	631
BUCHSENEINSATZ	72.200.0653.0	693
BUCHSENEINSATZ	72.205.0653.0	707
BUCHSENEINSATZ	72.300.0653.0	655
BUCHSENEINSATZ	72.300.1053.0	655
BUCHSENEINSATZ	72.300.1653.0	655
BUCHSENEINSATZ	72.300.2453.0	655
BUCHSENEINSATZ	72.300.3253.0	655
BUCHSENEINSATZ	72.300.4853.0	655
BUCHSENEINSATZ	72.700.0658.0	655
BUCHSENEINSATZ	72.700.1058.0	655
BUCHSENEINSATZ	72.700.1658.0	655
BUCHSENEINSATZ	72.700.2458.0	655
BUCHSENEINSATZ	72.700.3258.0	655
BUCHSENEINSATZ	72.700.4858.0	655
BUCHSENEINSATZ	73.300.0353.0	713
BUCHSENEINSATZ	73.300.0453.0	713
BUCHSENEINSATZ	73.700.0753.0	713
BUCHSENEINSATZ	73.700.0853.0	713
BUCHSENEINSATZ	73.700.1553.0	719
BUCHSENEINSATZ	73.700.2553.0	719
BUCHSENEINSATZ	73.700.4058.0	719
BUCHSENEINSATZ	73.700.6458.0	719
BUCHSENKONTAKT	02.125.1121.0	761
BUCHSENKONTAKT	02.125.3129.8	739
BUCHSENKONTAKT	02.125.3229.8	740
BUCHSENKONTAKT	02.125.3329.8	740
BUCHSENKONTAKT	02.125.3429.8	740
BUCHSENKONTAKT	02.125.3529.8	740
BUCHSENKONTAKT	02.125.3629.8	740
BUCHSENKONTAKT	02.125.3729.8	740
BUCHSENKONTAKT	02.125.3829.8	740
BUCHSENKONTAKT	02.125.3929.8	740
BUCHSENKONTAKT	02.125.4029.8	740
BUCHSENKONTAKT	02.125.4129.8	740
BUCHSENKONTAKT	02.125.4229.8	740
BUCHSENKONTAKT	02.125.4329.8	740
BUCHSENKONTAKT	02.125.4429.8	740
BUCHSENKONTAKT	02.125.4529.8	740
BUCHSENKONTAKT	02.125.4629.7	740
BUCHSENKONTAKT	02.125.4729.7	740
BUCHSENTEIL	75.012.0053.0	758
BUCHSENTEIL	99.700.6905.5	760
BZ 12	04.232.0051.0	218
BZ 12 B	04.832.0051.0	218
BZ 8190 / 1 - 12	04.007.4089.0	306
BZ 8190 / 13 - 24	04.007.4189.0	306
BZ 8190 / 25 - 36	04.007.4289.0	306
BZ 8190 / 37 - 48	04.007.4389.0	306
BZ 8190 / 49 - 60	04.007.4489.0	306
BZ 8190 / 61 - 72	04.007.4589.0	306
BZ 8190 / 73 - 84	04.007.4689.0	306
BZ 8190 / 85 - 96	04.007.4789.0	306
BZ 8190 / 97 - 108	04.007.4889.0	306
BZ KL 16 / 4 Z	Z4.102.0480.0	256
BZ KL 16 / 4 Z B	Z4.802.0480.0	256
BZ KL 16 / 6 Z	Z4.102.0680.0	256
BZ KL 16 / 8 Z	Z4.102.0880.0	256
BZ KL 16 / 12 Z	Z4.102.1280.0	256
BZ KL 16 / 16 Z	Z4.102.1680.0	256
BZ KL 16 / 20 Z	Z4.102.2080.0	256
BZ KL 16 / 20 Z B	Z4.802.2080.0	256
BZ KL 17 / 24	07.451.2480.0	267
BZ KL 28 / 1 - 99	04.007.1080.0	214
BZ KL 29 / 1 - 55	04.007.3080.0	214
CEMOS-SSAC3-400V-2A	80.020.6000.0	537
CEMOS-SSPHC-400V-2,5A	80.020.6003.0	537
CODIERAST BU.LST.	05.561.9153.0	286
CODIERAST BU.LST.	05.561.9153.0	37
CODIERAST STIFTL.	05.561.0053.0	36
CODIERAST STIFTL.	05.561.0053.0	284
CODIERSATZ	Z5.593.4053.0	788
CODIERSTIFT-AST	05.561.9453.0	319
CODIERSTIFT-AST	05.561.9453.5	319
CODIERSTUECK-AST	05.584.0053.0	311
CODIERSTUECK-AST	05.584.0053.0	137
CODIERSTUECK-AST	05.594.5153.0	219
CODIERSTUECK-AST	05.599.8053.0	321
CODIERSTUECK-AST	05.599.8053.0	205
CRIMPBACKEN A	05.502.2000.0	798
CRIMPBACKEN A	05.502.2000.0	741
CRIMPBACKEN B	05.502.2100.0	631
CRIMPBACKEN B	05.502.2100.0	798
CRIMPBACKEN C	05.502.2200.0	798
CRIMPBACKEN C	05.502.2200.0	741
CRIMPBACKEN D	05.502.2300.0	798
CRIMPBACKEN D	05.502.2300.0	739
CRIMPBACKEN E	05.502.2400.0	683
CRIMPBACKEN E	05.502.2400.0	798
CZ 0,5 -2,5 MM2 F.RV2/S	95.101.0612.0	207
DATENEINF.OT. 16P	70.060.1628.0	755
DECKEL	07.409.7056.0	780
DECKEL	07.409.7156.0	780
DECKEL	07.409.7256.0	780
DECKEL	07.409.7356.0	780
DECKEL	07.417.6729.0	713
DECKEL	07.417.6753.0	713
DECKEL	Z7.416.1656.0	780
DECKEL	Z7.416.1756.0	780
DECKEL	Z7.416.1856.0	780
DECKEL	Z7.419.6228.0	780
DECKEL M.DICHTUNG	07.417.6829.0	713
DECKEL M.VERRIEG.	Z7.419.6128.0	780
DIN 46228-A 0,5 - 6	06.600.4027.0	796
DIN 46228-A 0,75- 6	06.600.4127.0	796
DIN 46228-A 1 - 6	06.600.4227.0	796
DIN 46228-A 1,5 - 7	06.600.4327.0	796
DIN 46228-A 2,5 - 7	06.600.4427.0	796
DIN 46228-A 4 - 9	06.600.4527.0	796
DIN 46228-A 6 -10	06.600.4627.0	796
DIN 46228-A10 -12	06.600.4727.0	796
DIN 46228-A16 -12	06.600.4827.0	796
DIN 46228-A25 -15	06.600.4927.0	796
DIN 46228-E 0,5 -8	06.600.2027.0	796
DIN 46228-E 0,75- 8	06.600.2127.0	796
DIN 46228-E 1 - 8	06.600.2227.0	796
DIN 46228-E 1,5 - 8	06.600.2327.0	796
DIN 46228-E 1,5 -18	06.600.2427.0	796
DIN 46228-E 2,5 - 8	06.600.2527.0	796
DIN 46228-E 2,5 -18	06.600.2627.0	796
DIN 46228-E 4 -10	06.600.2727.0	796
DIN 46228-E 4 -18	06.600.2827.0	796
DIN 46228-E 6 -12	06.600.2927.0	796
DIN 46228-E 6 -18	06.600.3027.0	796
DIN 46228-E10 -12	06.600.3127.0	796
DIN 46228-E10 -18	06.600.3227.0	796
DIN 46228-E16 -12	06.600.3327.0	796
DIN 46228-E16 -18	06.600.3427.0	796
DIN 46228-E25 -18	06.600.3527.0	796
DIN 5264 A 0,4 X 2,5	06.502.4300.0	281
DIN 5264 A 0,6 x 3,5	06.502.4000.0	799
DIN 5264 A 0,6 x 3,5	06.502.4000.0	293
DIN 5264 A 0,6 x 3,5	06.502.4000.0	20
DIN 5264 A 0,8 x 4,0	06.502.4100.0	21
DIN 5264 A 1,0 x 5,5	06.502.4200.0	21
DIN 5264 B 0,6X3,5 M	06.502.5000.0	30
dipos EM	80.061.0010.3	582
DIPOS JB 4,3	Z8.000.0229.5	499
DIPOS KODIERAST	Z5.563.0453.0	499
DIPOS KSQ	80.060.0020.1	508
DIPOS KSQ	80.060.0021.1	508
DIPOS KSQ 9.5 .. 10.5V	82.081.0000.0	508
DIPOS PT100	80.060.0010.1	499
DIPOS PT100	80.060.0011.1	499
DIPOS PT100-3 0-400C	82.011.3004.0	499
DIPOS TC	80.060.0030.1	500
DIPOS TC	80.060.0031.1	500
DIPOS TC-K 0-1200C	82.021.1812.0	500
DIPOS UMC 12,5	80.060.0000.1	582
DIPOS UMC 12,5	80.060.0001.1	582
DIST-... /V0	Z1.299.3055.0	38
DIST-1N 4007 -1 /V0	Z1.299.3155.0	38
DIST-1N 4007 -2 /V0	Z1.299.3355.0	38
DIST-D /V0	Z1.299.3255.0	38
DNU-H-400V-250V4A	86.030.6353.0	542
DNU-U-400V-250V4A	87.030.6353.0	542
DRA-400V-250V3A	81.010.1000.0	543
DST85/ 2	25.002.0253.0	328
DST85/ 2 OB	25.003.0253.0	328
DST85/ 3	25.002.0353.0	328
DST85/ 3 OB	25.003.0353.0	328
DST85/ 4	25.002.0453.0	328
DST85/ 4 OB	25.003.0453.0	328

contents of type description

contents TYPE

Type	Part no.	section / page
DST85/ 5	25.002.0553.0	328
DST85/ 5 OB	25.003.0553.0	328
DST85/ 6	25.002.0653.0	328
DST85/ 6 OB	25.003.0653.0	328
DST85/ 7	25.002.0753.0	328
DST85/ 7 OB	25.003.0753.0	328
DST85/ 8	25.002.0853.0	328
DST85/ 8 OB	25.003.0853.0	328
DST85/ 9	25.002.0953.0	328
DST85/ 9 OB	25.003.0953.0	328
DST85/10	25.002.1053.0	328
DST85/10 OB	25.003.1053.0	328
DST85/11	25.002.1153.0	328
DST85/11 OB	25.003.1153.0	328
DST85/12	25.002.1253.0	328
DST85/12 OB	25.003.1253.0	328
DSTLF85/ 2	25.004.0253.0	328
DSTLF85/ 2 OB	25.005.0253.0	328
DSTLF85/ 3	25.004.0353.0	328
DSTLF85/ 3 OB	25.005.0353.0	328
DSTLF85/ 4	25.004.0453.0	328
DSTLF85/ 4 OB	25.005.0453.0	328
DSTLF85/ 5	25.004.0553.0	328
DSTLF85/ 5 OB	25.005.0553.0	328
DSTLF85/ 6	25.004.0653.0	328
DSTLF85/ 6 OB	25.005.0653.0	328
DSTLF85/ 7	25.004.0753.0	328
DSTLF85/ 7 OB	25.005.0753.0	328
DSTLF85/ 8	25.004.0853.0	328
DSTLF85/ 8 OB	25.005.0853.0	328
DSTLF85/ 9	25.004.0953.0	328
DSTLF85/ 9 OB	25.005.0953.0	328
DSTLF85/10	25.004.1053.0	328
DSTLF85/10 OB	25.005.1053.0	328
DSTLF85/11	25.004.1153.0	328
DSTLF85/11 OB	25.005.1153.0	328
DSTLF85/12	25.004.1253.0	328
DSTLF85/12 OB	25.005.1253.0	328
DSU-400V-250V4A	87.030.6453.0	542
EAS-UE / D-135	87.222.5953.0	564
EAS-UE / D-L-135	87.222.6053.0	564
EAS-UE/D-115	87.221.5953.0	562
EAS-UE/D-L-115	87.221.6053.0	562
EKAP BLAU	Z8.000.0202.2	442
EKAP ROT	Z8.000.0202.1	442
ETAGENKLEMME	56.704.6953.1	30
ETIKETTEN A4	05.591.3089.0	416
EUROPAKLEMMLST.1P	99.261.3521.9	258
F. 400/690V-SER.	05.502.3500.0	631
F.EIGSICH.ANL.ZINKDRCKG	99.721.3329.7	772
F.EIGSICH.ANL.ZINKDRCKG	99.723.3329.7	772
F.EIGSICH.ANL.ZINKDRCKG	99.727.3329.7	772
F.STCKHUELS.6,3 BIS2,5Q	05.582.8653.0	175
FEDERKONTAKT	02.124.4029.0	207
FEDERKONTAKT	02.124.4100.0	207
FEDERKONTAKT	02.125.1629.0	291
FEDERKONTAKT	02.125.1729.0	291
FEDERKONTAKT BAND	02.125.1600.0	291
FEDERKONTAKT BAND	02.125.1700.0	291
FKK18 / 1	02.220.0121.0	217
FKK18 / 1 Z	Z2.220.0121.0	217
FKK18 / 2	02.220.0321.0	217
FKK18 / 2 Z	Z2.220.0321.0	217
FKK18 / 3	02.220.0421.0	217
FKK18 / 3 Z	Z2.220.0421.0	217
FLACHSTECKER	05.555.8521.0	584
FLACHSTECKER	05.555.8621.0	584
FLACHSTECKER	05.555.8721.0	584
FLACHSTECKER	05.555.8821.0	584
FLACHSTECKER	05.555.8921.0	584
FLACHSTECKER	05.555.9121.0	584
FLARE MOVE BM SERIE 38	80.063.4129.3	444
FLARE MOVE BZ SERIE 38	80.063.4029.3	444
FLARE-110V-1W-250V6A-F	80.010.4131.0	442
FLARE-115V/48VDC-0,5A	80.020.4102.0	478
FLARE-12DC-1W-250V6A-F	80.010.4106.0	442
FLARE-230V-1W-250V6A-F	80.010.4141.0	442
FLARE-230VAC/48VDC-0,5A	80.020.4103.0	479
FLARE-24DC-1W-250V6A-F	80.010.4100.0	442
FLARE-24DC-2W-250V6A-F	80.010.4103.0	443
FLARE-24V-1S-250V6A-HA	80.010.4101.0	446
FLARE-24V-1W-250V6A-CUT	80.010.4120.0	446
FLARE-24V-1W-48V20M	80.010.4005.0	442
FLARE-24V-1W-48V20M-F	80.010.4105.0	442
FLARE-24VDC/230VAC-0,5A	80.020.4150.0	479
FLARE-24VDC/48VDC-0,5A	80.020.4100.0	478
FLARE-24VDC/48VDC-2A	80.020.4101.0	478
FLARE-PID/0060-S-250V6A	81.020.4102.0	462
FLARE-PID/0100-S-250V6A	81.020.4101.0	462
FLARE-TIMER-S-250V6A	81.020.4100.0	462
FLK-SR 10	87.210.2201.3	561
FLK-SR 14	87.210.2202.3	561
FLK-SR 16	87.210.2203.3	561
FLK-SR 20	87.210.2204.3	561
FLK-SR 26	87.210.2205.3	561
FLK-SR 34	87.210.2207.3	561
FLK-SR 40	87.210.2208.3	561
FLK-SR 50	87.210.2210.3	561
FLK-SR 60	87.210.2211.3	561
FLK-SR 64	87.210.2212.3	561
FRONTSTECKER 115	87.221.5853.0	562
FRONTSTECKER 135/150	87.222.5853.0	564
FSR-25VAC-12V1A	87.230.0553.0	528
FSR-25VAC-15V1A	87.230.0653.0	528
FSR-25VAC-5V1A	87.230.0453.0	528
FSR-28VAC-24V1A	87.230.0753.0	528
FUER 0,5 MM2	02.123.7021.0	631
FUER 0,5 MM2	05.543.7021.0	631
FUER 0,5 MM2 KURZ	05.543.9021.0	655
FUER 0,75-1 MM2	02.123.7121.0	631
FUER 0,75-1 MM2	05.543.7121.0	631
FUER 0,75-1 MM2	05.543.9121.0	655
FUER 1,5 MM2	02.123.7221.0	631
FUER 1,5 MM2	05.543.7221.0	631
FUER 1,5 MM2 KURZ	05.543.9221.0	655
FUER 1,5 MM2 VERGOLD	02.123.7201.0	631
FUER 1,5 MM2 VERGOLD	05.543.7201.0	631
FUER 2,5 MM2	02.123.7321.0	631
FUER 2,5 MM2	05.543.7321.0	631
FUER 2,5 MM2 KURZ	05.543.9321.0	655
FUER 4 MM2	02.123.7421.0	631
FUER 4 MM2	05.543.7421.0	631
FUER 4 MM2	05.543.9421.0	655
FUER 70ER KLEMMENADAPT.	Z7.256.0227.0	781
FUER 70ER KLEMMENADAPT.	Z7.256.0327.0	781
FUER 70ER KLEMMENADAPT.	Z7.256.0427.0	781
FUER 70ER KLEMMENADAPT.	Z7.256.0527.0	781
FUER 70ER KLEMMENADAPT.	Z7.256.0627.0	781
FUER 70ER KLEMMENADAPT.	Z7.256.0727.0	781
FUER 70ER KLEMMENADAPT.	Z7.256.0827.0	781
FUER 70ER KLEMMENADAPT.	Z7.256.0927.0	781
FUER 70ER KLEMMENADAPT.	Z7.256.1027.0	781
FUER 70ER KLEMMENADAPT.	Z7.256.1127.0	781
FUER 70ER KLEMMENADAPT.	Z7.256.1227.0	781
FUER NYAF 1,5 MM2	05.592.7553.0	138
FUER NYAF 2,5 MM2	05.592.7653.0	138
FUER WK 4E/U	Z1.299.9053.0	176
FUER WKI 10/U	04.325.8553.8	69
FUER WKI 16/U	04.325.8653.8	79
GEH.OT. TEIL L	75.900.0135.0	664
GEH.OT. TEIL L	75.950.1635.0	664
GEH.OT. TEIL L	75.950.2435.0	664
GEH.OT. TEIL L	75.960.1635.0	664
GEH.OT. TEIL L	75.960.2435.0	664
GEH.UT. 10 POL.	70.320.1038.0	684
GEH.UT. 16 POL.	70.320.1638.0	684
GEH.UT. 24 POL.	70.320.2438.0	684
GEH.UT. 6 POL.	70.320.0638.0	684
GEH.UT. TEIL F	75.900.0035.0	664
GEH.UT. TEIL F	75.931.1635.0	664
GEH.UT. TEIL F	75.931.2435.0	664
GEH.UT. TEIL F	75.933.1635.0	664
GEH.UT. TEIL F	75.933.2435.0	664
GEH.UT. TEIL F	75.934.2435.0	664
GEH.UT. TEIL F	75.941.1635.0	664
GEH.UT. TEIL F	75.941.2435.0	664
GEHAEUEOBERTEIL	70.354.0635.3	633
GEHAEUSE-OBERTEIL	70.351.1035.1	637
GEHAEUSE-OBERTEIL	70.351.1635.1	637
GEHAEUSE-OBERTEIL	70.351.2435.1	637
GEHAEUSE-OBERTEIL	70.355.1035.1	637
GEHAEUSE-OBERTEIL	70.355.1035.2	637
GEHAEUSE-OBERTEIL	70.355.1635.1	637
GEHAEUSE-OBERTEIL	70.355.1635.2	637
GEHAEUSE-OBERTEIL	70.355.2435.1	637
GEHAEUSE-OBERTEIL	70.355.2435.2	637
GEHAEUSE-OBERTEIL	70.356.1035.1	637
GEHAEUSE-OBERTEIL	70.356.1635.1	637
GEHAEUSE-OBERTEIL	70.356.2435.1	637
GEHAEUSE-OBERTEIL	70.357.1035.1	637
GEHAEUSE-OBERTEIL	70.357.1635.1	637
GEHAEUSE-OBERTEIL	70.357.2435.1	637
GEHAEUSEOBERTEIL	70.350.0628.7	769
GEHAEUSEOBERTEIL	70.350.0635.0	633
GEHAEUSEOBERTEIL	70.350.0635.1	633
GEHAEUSEOBERTEIL	70.350.0635.2	633
GEHAEUSEOBERTEIL	70.350.0635.3	633
GEHAEUSEOBERTEIL	70.350.1028.7	769
GEHAEUSEOBERTEIL	70.350.1035.0	637
GEHAEUSEOBERTEIL	70.350.1035.1	637
GEHAEUSEOBERTEIL	70.350.1035.3	637
GEHAEUSEOBERTEIL	70.350.1628.7	769
GEHAEUSEOBERTEIL	70.350.1635.0	637
GEHAEUSEOBERTEIL	70.350.1635.1	637
GEHAEUSEOBERTEIL	70.350.1635.3	637
GEHAEUSEOBERTEIL	70.350.2435.0	637
GEHAEUSEOBERTEIL	70.350.2435.1	637
GEHAEUSEOBERTEIL	70.350.2435.2	637
GEHAEUSEOBERTEIL	70.350.2435.3	637
GEHAEUSEOBERTEIL	70.350.3235.0	637
GEHAEUSEOBERTEIL	70.350.3235.1	637
GEHAEUSEOBERTEIL	70.350.3235.2	637
GEHAEUSEOBERTEIL	70.350.3235.3	637
GEHAEUSEOBERTEIL	70.350.4828.7	769
GEHAEUSEOBERTEIL	70.350.4835.0	633
GEHAEUSEOBERTEIL	70.350.4835.1	633
GEHAEUSEOBERTEIL	70.350.4835.2	633
GEHAEUSEOBERTEIL	70.350.4835.3	633
GEHAEUSEOBERTEIL	70.351.0635.0	633
GEHAEUSEOBERTEIL	70.351.0635.2	633
GEHAEUSEOBERTEIL	70.351.0635.3	633
GEHAEUSEOBERTEIL	70.351.1035.0	637
GEHAEUSEOBERTEIL	70.351.1035.2	637
GEHAEUSEOBERTEIL	70.351.1035.3	637
GEHAEUSEOBERTEIL	70.351.1635.0	637
GEHAEUSEOBERTEIL	70.351.1635.2	637
GEHAEUSEOBERTEIL	70.351.1635.3	637
GEHAEUSEOBERTEIL	70.351.2435.0	637
GEHAEUSEOBERTEIL	70.351.2435.2	637
GEHAEUSEOBERTEIL	70.351.2435.3	637
GEHAEUSEOBERTEIL	70.352.0628.7	769
GEHAEUSEOBERTEIL	70.352.0635.0	633
GEHAEUSEOBERTEIL	70.352.0635.1	633
GEHAEUSEOBERTEIL	70.352.0635.2	633
GEHAEUSEOBERTEIL	70.352.0635.3	633
GEHAEUSEOBERTEIL	70.352.1035.0	637
GEHAEUSEOBERTEIL	70.352.1035.1	637
GEHAEUSEOBERTEIL	70.352.1035.2	637
GEHAEUSEOBERTEIL	70.352.1035.3	637
GEHAEUSEOBERTEIL	70.352.1628.7	769
GEHAEUSEOBERTEIL	70.352.1635.0	637
GEHAEUSEOBERTEIL	70.352.1635.1	637
GEHAEUSEOBERTEIL	70.352.1635.2	637
GEHAEUSEOBERTEIL	70.352.1635.3	637
GEHAEUSEOBERTEIL	70.352.2428.7	773
GEHAEUSEOBERTEIL	70.352.2435.0	637
GEHAEUSEOBERTEIL	70.352.2435.1	637
GEHAEUSEOBERTEIL	70.352.2435.2	637
GEHAEUSEOBERTEIL	70.352.2435.3	637
GEHAEUSEOBERTEIL	70.352.3235.0	637
GEHAEUSEOBERTEIL	70.352.3235.1	637
GEHAEUSEOBERTEIL	70.352.3235.2	637
GEHAEUSEOBERTEIL	70.352.3235.3	637
GEHAEUSEOBERTEIL	70.352.4828.7	769
GEHAEUSEOBERTEIL	70.352.4835.0	633
GEHAEUSEOBERTEIL	70.352.4835.1	633
GEHAEUSEOBERTEIL	70.352.4835.2	633
GEHAEUSEOBERTEIL	70.352.4835.3	633
GEHAEUSEOBERTEIL	70.353.0635.0	633
GEHAEUSEOBERTEIL	70.353.0635.2	633
GEHAEUSEOBERTEIL	70.353.0635.3	633
GEHAEUSEOBERTEIL	70.353.1035.0	637
GEHAEUSEOBERTEIL	70.353.1035.1	637
GEHAEUSEOBERTEIL	70.353.1035.2	637
GEHAEUSEOBERTEIL	70.353.1035.3	637
GEHAEUSEOBERTEIL	70.353.1635.0	637
GEHAEUSEOBERTEIL	70.353.1635.1	637
GEHAEUSEOBERTEIL	70.353.1635.2	637
GEHAEUSEOBERTEIL	70.353.1635.3	637
GEHAEUSEOBERTEIL	70.353.2435.0	637
GEHAEUSEOBERTEIL	70.353.2435.1	637
GEHAEUSEOBERTEIL	70.353.2435.2	637
GEHAEUSEOBERTEIL	70.353.2435.3	637
GEHAEUSEOBERTEIL	70.353.3235.1	637
GEHAEUSEOBERTEIL	70.353.3235.2	637
GEHAEUSEOBERTEIL	70.353.4828.7	769
GEHAEUSEOBERTEIL	70.353.4835.1	633
GEHAEUSEOBERTEIL	70.353.4835.2	633
GEHAEUSEOBERTEIL	70.354.0628.7	769
GEHAEUSEOBERTEIL	70.354.0635.0	633
GEHAEUSEOBERTEIL	70.354.0635.1	633
GEHAEUSEOBERTEIL	70.354.0635.2	633
GEHAEUSEOBERTEIL	70.354.1028.7	769
GEHAEUSEOBERTEIL	70.354.1035.0	637
GEHAEUSEOBERTEIL	70.354.1035.1	637
GEHAEUSEOBERTEIL	70.354.1035.2	637
GEHAEUSEOBERTEIL	70.354.1035.3	637
GEHAEUSEOBERTEIL	70.354.1628.7	769
GEHAEUSEOBERTEIL	70.354.1635.0	637
GEHAEUSEOBERTEIL	70.354.1635.1	637
GEHAEUSEOBERTEIL	70.354.1635.2	637
GEHAEUSEOBERTEIL	70.354.1635.3	637
GEHAEUSEOBERTEIL	70.354.2435.0	637
GEHAEUSEOBERTEIL	70.354.2435.1	637
GEHAEUSEOBERTEIL	70.354.2435.2	637
GEHAEUSEOBERTEIL	70.354.2435.3	637
GEHAEUSEOBERTEIL	70.354.3235.1	637
GEHAEUSEOBERTEIL	70.354.3235.2	637
GEHAEUSEOBERTEIL	70.354.4828.7	769
GEHAEUSEOBERTEIL	70.354.4835.1	633
GEHAEUSEOBERTEIL	70.354.4835.2	633
GEHAEUSEOBERTEIL	70.355.1028.7	769
GEHAEUSEOBERTEIL	70.355.1035.0	637
GEHAEUSEOBERTEIL	70.355.1035.3	637
GEHAEUSEOBERTEIL	70.355.1628.7	769
GEHAEUSEOBERTEIL	70.355.1635.0	637
GEHAEUSEOBERTEIL	70.355.1635.3	637
GEHAEUSEOBERTEIL	70.355.2435.0	637
GEHAEUSEOBERTEIL	70.355.2435.3	637
GEHAEUSEOBERTEIL	70.356.1035.0	637
GEHAEUSEOBERTEIL	70.356.1035.2	637
GEHAEUSEOBERTEIL	70.356.1035.3	637
GEHAEUSEOBERTEIL	70.356.1635.0	637
GEHAEUSEOBERTEIL	70.356.1635.2	637
GEHAEUSEOBERTEIL	70.356.1635.3	637
GEHAEUSEOBERTEIL	70.356.2435.0	637
GEHAEUSEOBERTEIL	70.356.2435.2	637
GEHAEUSEOBERTEIL	70.356.2435.3	637
GEHAEUSEOBERTEIL	70.357.1035.0	637
GEHAEUSEOBERTEIL	70.357.1035.2	637
GEHAEUSEOBERTEIL	70.357.1035.3	637
GEHAEUSEOBERTEIL	70.357.1635.0	637
GEHAEUSEOBERTEIL	70.357.1635.2	637
GEHAEUSEOBERTEIL	70.357.1635.3	637
GEHAEUSEOBERTEIL	70.357.2435.0	637
GEHAEUSEOBERTEIL	70.357.2435.2	637
GEHAEUSEOBERTEIL	70.357.2435.3	637
GEHAEUSEOBERTEIL	70.358.1035.0	637
GEHAEUSEOBERTEIL	70.358.1035.1	637
GEHAEUSEOBERTEIL	70.358.1035.2	637
GEHAEUSEOBERTEIL	70.358.1035.3	637
GEHAEUSEOBERTEIL	70.358.1635.0	637
GEHAEUSEOBERTEIL	70.358.1635.1	637
GEHAEUSEOBERTEIL	70.358.1635.2	637
GEHAEUSEOBERTEIL	70.358.1635.3	637
GEHAEUSEOBERTEIL	70.358.2435.0	637
GEHAEUSEOBERTEIL	70.358.2435.1	637
GEHAEUSEOBERTEIL	70.358.2435.2	637
GEHAEUSEOBERTEIL	70.358.2435.3	637
GEHAEUSEOBERTEIL	70.359.1035.0	637
GEHAEUSEOBERTEIL	70.359.1035.1	637

contents

Type	Part no.	section / page
GEHAEUSEOBERTEIL	70.359.1035.2	637
GEHAEUSEOBERTEIL	70.359.1035.3	637
GEHAEUSEOBERTEIL	70.359.1635.0	637
GEHAEUSEOBERTEIL	70.359.1635.1	637
GEHAEUSEOBERTEIL	70.359.1635.2	637
GEHAEUSEOBERTEIL	70.359.1635.3	637
GEHAEUSEOBERTEIL	70.359.2435.0	637
GEHAEUSEOBERTEIL	70.359.2435.1	637
GEHAEUSEOBERTEIL	70.359.2435.2	637
GEHAEUSEOBERTEIL	70.359.2435.3	637
GEHAEUSEOBERTEIL	70.360.0628.9	769
GEHAEUSEOBERTEIL	70.360.1028.9	769
GEHAEUSEOBERTEIL	70.360.1628.9	769
GEHAEUSEOBERTEIL	70.360.2428.9	769
GEHAEUSEOBERTEIL	70.360.4828.9	769
GEHAEUSEOBERTEIL	70.362.0628.9	769
GEHAEUSEOBERTEIL	70.362.1028.9	769
GEHAEUSEOBERTEIL	70.362.1628.9	769
GEHAEUSEOBERTEIL	70.362.2428.9	772
GEHAEUSEOBERTEIL	70.362.4828.9	769
GEHAEUSEOBERTEIL	70.363.0628.9	769
GEHAEUSEOBERTEIL	70.363.1028.9	769
GEHAEUSEOBERTEIL	70.363.1628.9	769
GEHAEUSEOBERTEIL	70.363.2428.9	769
GEHAEUSEOBERTEIL	70.364.0628.9	769
GEHAEUSEOBERTEIL	70.364.1028.9	769
GEHAEUSEOBERTEIL	70.364.1628.9	769
GEHAEUSEOBERTEIL	70.364.4828.9	769
GEHAEUSEOBERTEIL	70.365.1028.9	769
GEHAEUSEOBERTEIL	70.365.1628.9	769
GEHAEUSEOBERTEIL	70.365.2428.9	769
GEHAEUSEOBERTEIL	70.367.1028.9	769
GEHAEUSEOBERTEIL	70.367.1628.9	769
GEHAEUSEOBERTEIL	70.367.2428.9	769
GEHAEUSEOBERTEIL	70.368.1028.9	769
GEHAEUSEOBERTEIL	70.368.1628.9	769
GEHAEUSEOBERTEIL	70.368.2428.9	769
GEHAEUSEOBERTEIL	70.369.1028.9	769
GEHAEUSEOBERTEIL	70.369.1628.9	769
GEHAEUSEOBERTEIL	70.372.0628.7	773
GEHAEUSEOBERTEIL	70.372.0635.0	733
GEHAEUSEOBERTEIL	70.372.0635.3	733
GEHAEUSEOBERTEIL	70.372.1028.7	773
GEHAEUSEOBERTEIL	70.372.1035.0	733
GEHAEUSEOBERTEIL	70.372.1035.3	733
GEHAEUSEOBERTEIL	70.372.1628.7	773
GEHAEUSEOBERTEIL	70.372.1635.0	733
GEHAEUSEOBERTEIL	70.372.1635.3	733
GEHAEUSEOBERTEIL	70.372.2428.7	773
GEHAEUSEOBERTEIL	70.372.4828.7	773
GEHAEUSEOBERTEIL	70.372.4835.3	733
GEHAEUSEOBERTEIL	70.374.2435.3	733
GEHAEUSEOBERTEIL	70.375.4828.9	772
GEHAEUSEOBERTEIL	70.375.4835.3	733
GEHAEUSEOBERTEIL	70.377.4828.9	772
GEHAEUSEOBERTEIL	71.350.1035.0	633
GEHAEUSEOBERTEIL	71.350.1035.1	633
GEHAEUSEOBERTEIL	71.350.1035.2	633
GEHAEUSEOBERTEIL	71.350.1035.3	633
GEHAEUSEOBERTEIL	71.350.1635.0	633
GEHAEUSEOBERTEIL	71.350.1635.1	633
GEHAEUSEOBERTEIL	71.350.1635.2	633
GEHAEUSEOBERTEIL	71.350.1635.3	633
GEHAEUSEOBERTEIL	71.350.2435.0	633
GEHAEUSEOBERTEIL	71.350.2435.1	633
GEHAEUSEOBERTEIL	71.350.2435.2	633
GEHAEUSEOBERTEIL	71.350.2435.3	633
GEHAEUSEOBERTEIL	71.351.1035.0	633
GEHAEUSEOBERTEIL	71.351.1035.1	633
GEHAEUSEOBERTEIL	71.351.1035.2	633
GEHAEUSEOBERTEIL	71.351.1035.3	633
GEHAEUSEOBERTEIL	71.351.1635.0	633
GEHAEUSEOBERTEIL	71.351.1635.1	633
GEHAEUSEOBERTEIL	71.351.1635.2	633
GEHAEUSEOBERTEIL	71.351.1635.3	633
GEHAEUSEOBERTEIL	71.351.2435.0	633
GEHAEUSEOBERTEIL	71.351.2435.1	633
GEHAEUSEOBERTEIL	71.351.2435.2	633
GEHAEUSEOBERTEIL	71.351.2435.3	633
GEHAEUSEOBERTEIL	71.352.1035.0	633
GEHAEUSEOBERTEIL	71.352.1035.1	633
GEHAEUSEOBERTEIL	71.352.1035.2	633
GEHAEUSEOBERTEIL	71.352.1035.3	633
GEHAEUSEOBERTEIL	71.352.1635.0	633
GEHAEUSEOBERTEIL	71.352.1635.1	633
GEHAEUSEOBERTEIL	71.352.1635.2	633
GEHAEUSEOBERTEIL	71.352.1635.3	633
GEHAEUSEOBERTEIL	71.352.2435.0	633
GEHAEUSEOBERTEIL	71.352.2435.1	633
GEHAEUSEOBERTEIL	71.352.2435.2	633
GEHAEUSEOBERTEIL	71.352.2435.3	633
GEHAEUSEOBERTEIL	71.353.1035.0	633
GEHAEUSEOBERTEIL	71.353.1035.1	633
GEHAEUSEOBERTEIL	71.353.1035.2	633
GEHAEUSEOBERTEIL	71.353.1035.3	633
GEHAEUSEOBERTEIL	71.353.1635.0	633
GEHAEUSEOBERTEIL	71.353.1635.1	633
GEHAEUSEOBERTEIL	71.353.1635.2	633
GEHAEUSEOBERTEIL	71.353.1635.3	633
GEHAEUSEOBERTEIL	71.353.2435.0	633
GEHAEUSEOBERTEIL	71.353.2435.1	633
GEHAEUSEOBERTEIL	71.353.2435.2	633
GEHAEUSEOBERTEIL	71.353.2435.3	633
GEHAEUSEOBERTEIL	71.354.1035.0	633
GEHAEUSEOBERTEIL	71.354.1035.1	633
GEHAEUSEOBERTEIL	71.354.1035.2	633
GEHAEUSEOBERTEIL	71.354.1035.3	633
GEHAEUSEOBERTEIL	71.354.1635.0	633
GEHAEUSEOBERTEIL	71.354.1635.1	633
GEHAEUSEOBERTEIL	71.354.1635.2	633
GEHAEUSEOBERTEIL	71.354.1635.3	633
GEHAEUSEOBERTEIL	71.354.2435.0	633
GEHAEUSEOBERTEIL	71.354.2435.1	633
GEHAEUSEOBERTEIL	71.354.2435.2	633
GEHAEUSEOBERTEIL	71.354.2435.3	633
GEHAEUSEOBERTEIL	71.372.1035.0	735
GEHAEUSEOBERTEIL	71.372.1635.0	735
GEHAEUSEOBERTEIL	72.250.1635.2	703
GEHAEUSEOBERTEIL	72.250.2435.2	705
GEHAEUSEOBERTEIL	72.350.0635.0	657
GEHAEUSEOBERTEIL	72.350.0635.1	657
GEHAEUSEOBERTEIL	72.350.0635.2	657
GEHAEUSEOBERTEIL	72.350.0635.3	657
GEHAEUSEOBERTEIL	72.350.1035.0	649
GEHAEUSEOBERTEIL	72.350.1035.1	649
GEHAEUSEOBERTEIL	72.350.1035.2	649
GEHAEUSEOBERTEIL	72.350.1035.3	649
GEHAEUSEOBERTEIL	72.350.1635.0	649
GEHAEUSEOBERTEIL	72.350.1635.1	649
GEHAEUSEOBERTEIL	72.350.1635.2	649
GEHAEUSEOBERTEIL	72.350.1635.3	649
GEHAEUSEOBERTEIL	72.350.2435.0	649
GEHAEUSEOBERTEIL	72.350.2435.1	649
GEHAEUSEOBERTEIL	72.350.2435.2	649
GEHAEUSEOBERTEIL	72.350.2435.3	649
GEHAEUSEOBERTEIL	72.351.0635.0	657
GEHAEUSEOBERTEIL	72.351.0635.1	657
GEHAEUSEOBERTEIL	72.351.0635.2	657
GEHAEUSEOBERTEIL	72.351.0635.3	657
GEHAEUSEOBERTEIL	72.351.1035.0	649
GEHAEUSEOBERTEIL	72.351.1035.1	649
GEHAEUSEOBERTEIL	72.351.1035.2	649
GEHAEUSEOBERTEIL	72.351.1035.3	649
GEHAEUSEOBERTEIL	72.351.1635.0	649
GEHAEUSEOBERTEIL	72.351.1635.1	649
GEHAEUSEOBERTEIL	72.351.1635.2	649
GEHAEUSEOBERTEIL	72.351.1635.3	649
GEHAEUSEOBERTEIL	72.351.2435.0	649
GEHAEUSEOBERTEIL	72.351.2435.1	649
GEHAEUSEOBERTEIL	72.351.2435.2	649
GEHAEUSEOBERTEIL	72.351.2435.3	649
GEHAEUSEOBERTEIL	72.352.0635.0	657
GEHAEUSEOBERTEIL	72.352.0635.1	657
GEHAEUSEOBERTEIL	72.352.0635.2	657
GEHAEUSEOBERTEIL	72.352.0635.3	657
GEHAEUSEOBERTEIL	72.352.1035.0	649
GEHAEUSEOBERTEIL	72.352.1035.1	649
GEHAEUSEOBERTEIL	72.352.1035.2	649
GEHAEUSEOBERTEIL	72.352.1035.3	649
GEHAEUSEOBERTEIL	72.352.1635.0	649
GEHAEUSEOBERTEIL	72.352.1635.1	649
GEHAEUSEOBERTEIL	72.352.1635.2	649
GEHAEUSEOBERTEIL	72.352.1635.3	649
GEHAEUSEOBERTEIL	72.352.2435.0	649
GEHAEUSEOBERTEIL	72.352.2435.1	649
GEHAEUSEOBERTEIL	72.352.2435.2	649
GEHAEUSEOBERTEIL	72.352.2435.3	649
GEHAEUSEOBERTEIL	72.353.2435.0	649
GEHAEUSEOBERTEIL	72.354.2435.0	649
GEHAEUSEOBERTEIL	72.355.1035.0	649
GEHAEUSEOBERTEIL	72.355.1035.1	649
GEHAEUSEOBERTEIL	72.355.1035.2	649
GEHAEUSEOBERTEIL	72.355.1035.3	649
GEHAEUSEOBERTEIL	72.355.1635.0	649
GEHAEUSEOBERTEIL	72.355.1635.1	649
GEHAEUSEOBERTEIL	72.355.1635.2	649
GEHAEUSEOBERTEIL	72.355.1635.3	649
GEHAEUSEOBERTEIL	72.355.2435.0	649
GEHAEUSEOBERTEIL	72.355.2435.1	649
GEHAEUSEOBERTEIL	72.355.2435.2	649
GEHAEUSEOBERTEIL	72.355.2435.3	649
GEHAEUSEOBERTEIL	72.356.1035.0	649
GEHAEUSEOBERTEIL	72.356.1035.1	649
GEHAEUSEOBERTEIL	72.356.1035.2	649
GEHAEUSEOBERTEIL	72.356.1035.3	649
GEHAEUSEOBERTEIL	72.356.1635.0	649
GEHAEUSEOBERTEIL	72.356.1635.1	649
GEHAEUSEOBERTEIL	72.356.1635.2	649
GEHAEUSEOBERTEIL	72.356.1635.3	649
GEHAEUSEOBERTEIL	72.356.2435.0	649
GEHAEUSEOBERTEIL	72.356.2435.1	649
GEHAEUSEOBERTEIL	72.356.2435.2	649
GEHAEUSEOBERTEIL	72.356.2435.3	649
GEHAEUSEOBERTEIL	72.357.1035.0	649
GEHAEUSEOBERTEIL	72.357.1035.1	649
GEHAEUSEOBERTEIL	72.357.1035.2	649
GEHAEUSEOBERTEIL	72.357.1035.3	649
GEHAEUSEOBERTEIL	72.357.1635.0	649
GEHAEUSEOBERTEIL	72.357.1635.1	649
GEHAEUSEOBERTEIL	72.357.1635.2	649
GEHAEUSEOBERTEIL	72.357.1635.3	649
GEHAEUSEOBERTEIL	72.357.2435.0	649
GEHAEUSEOBERTEIL	72.357.2435.1	649
GEHAEUSEOBERTEIL	72.357.2435.2	649
GEHAEUSEOBERTEIL	72.357.2435.3	649
GEHAEUSEOBERTEIL	72.359.2435.0	649
GEHAEUSEOBERTEIL	72.372.1035.0	733
GEHAEUSEOBERTEIL	72.372.1035.3	733
GEHAEUSEOBERTEIL	72.372.1635.0	733
GEHAEUSEOBERTEIL	72.372.1635.3	733
GEHAEUSEOBERTEIL	72.372.2435.0	733
GEHAEUSEOBERTEIL	72.372.2435.3	733
GEHAEUSEOBERTEIL	72.374.2435.3	733
GEHAEUSEOBERTEIL	73.350.4035.0	727
GEHAEUSEOBERTEIL	73.350.4035.1	727
GEHAEUSEOBERTEIL	73.350.4035.2	727
GEHAEUSEOBERTEIL	73.350.4035.3	727
GEHAEUSEOBERTEIL	73.350.6435.0	727
GEHAEUSEOBERTEIL	73.350.6435.1	727
GEHAEUSEOBERTEIL	73.350.6435.2	727
GEHAEUSEOBERTEIL	73.350.6435.3	727
GEHAEUSEOBERTEIL	73.352.4035.0	709
GEHAEUSEOBERTEIL	73.352.4035.1	709
GEHAEUSEOBERTEIL	73.352.4035.2	709
GEHAEUSEOBERTEIL	73.352.4035.3	709
GEHAEUSEOBERTEIL	73.352.6435.0	727
GEHAEUSEOBERTEIL	73.352.6435.1	727
GEHAEUSEOBERTEIL	73.352.6435.2	727
GEHAEUSEOBERTEIL	73.352.6435.3	727
GEHAEUSEOBERTEIL	73.353.1035.0	749
GEHAEUSEOBERTEIL	73.353.1035.1	749
GEHAEUSEOBERTEIL	73.353.1035.2	749
GEHAEUSEOBERTEIL	73.353.4035.0	709
GEHAEUSEOBERTEIL	73.353.4035.1	709
GEHAEUSEOBERTEIL	73.353.4035.2	709
GEHAEUSEOBERTEIL	73.353.4035.3	709
GEHAEUSEOBERTEIL	73.353.6435.0	727
GEHAEUSEOBERTEIL	73.353.6435.1	727
GEHAEUSEOBERTEIL	73.353.6435.2	727
GEHAEUSEOBERTEIL	73.353.6435.3	727
GEHAEUSEOBERTEIL	73.354.1035.0	749
GEHAEUSEOBERTEIL	73.354.1035.1	749
GEHAEUSEOBERTEIL	73.354.1035.2	749
GEHAEUSEOBERTEIL	73.354.4035.0	727
GEHAEUSEOBERTEIL	73.354.6435.0	727
GEHAEUSEOBERTEIL	73.355.4035.0	727
GEHAEUSEOBERTEIL	73.355.4035.1	727
GEHAEUSEOBERTEIL	73.355.4035.2	727
GEHAEUSEOBERTEIL	73.355.4035.3	727
GEHAEUSEOBERTEIL	73.355.6435.0	727
GEHAEUSEOBERTEIL	73.355.6435.1	727
GEHAEUSEOBERTEIL	73.355.6435.2	727
GEHAEUSEOBERTEIL	73.355.6435.3	727
GEHAEUSEOBERTEIL	73.357.4035.0	709
GEHAEUSEOBERTEIL	73.357.4035.1	709
GEHAEUSEOBERTEIL	73.357.4035.2	709
GEHAEUSEOBERTEIL	73.357.4035.3	709
GEHAEUSEOBERTEIL	73.357.6435.0	727
GEHAEUSEOBERTEIL	73.357.6435.1	727
GEHAEUSEOBERTEIL	73.357.6435.2	727
GEHAEUSEOBERTEIL	73.357.6435.3	727
GEHAEUSEOBERTEIL	73.358.4035.0	709
GEHAEUSEOBERTEIL	73.358.4035.1	709
GEHAEUSEOBERTEIL	73.358.4035.2	709
GEHAEUSEOBERTEIL	73.358.4035.3	709
GEHAEUSEOBERTEIL	73.358.6435.0	727
GEHAEUSEOBERTEIL	73.358.6435.1	727
GEHAEUSEOBERTEIL	73.358.6435.2	727
GEHAEUSEOBERTEIL	73.358.6435.3	727
GEHAEUSEOBERTEIL	73.359.4035.0	727
GEHAEUSEOBERTEIL	73.359.6435.0	727
GEHAEUSEOBERTEIL	76.350.0736.0	713
GEHAEUSEOBERTEIL	76.350.0736.1	713
GEHAEUSEOBERTEIL	76.350.0760.1	713
GEHAEUSEOBERTEIL	76.350.1535.0	721
GEHAEUSEOBERTEIL	76.350.1535.2	721
GEHAEUSEOBERTEIL	76.350.2535.0	721
GEHAEUSEOBERTEIL	76.350.2535.2	721
GEHAEUSEOBERTEIL	76.350.4035.0	721
GEHAEUSEOBERTEIL	76.350.4035.1	721
GEHAEUSEOBERTEIL	76.350.4035.2	721
GEHAEUSEOBERTEIL	76.350.4035.3	721
GEHAEUSEOBERTEIL	76.350.6435.0	721
GEHAEUSEOBERTEIL	76.350.6435.1	721
GEHAEUSEOBERTEIL	76.350.6435.2	721
GEHAEUSEOBERTEIL	76.350.6435.3	721
GEHAEUSEOBERTEIL	76.352.0736.0	713
GEHAEUSEOBERTEIL	76.352.0736.1	713
GEHAEUSEOBERTEIL	76.352.0760.1	713
GEHAEUSEOBERTEIL	76.352.1535.0	721
GEHAEUSEOBERTEIL	76.352.1535.1	721
GEHAEUSEOBERTEIL	76.352.1535.2	721
GEHAEUSEOBERTEIL	76.352.2535.0	721
GEHAEUSEOBERTEIL	76.352.2535.1	721
GEHAEUSEOBERTEIL	76.352.2535.2	721
GEHAEUSEOBERTEIL	76.352.4035.0	697
GEHAEUSEOBERTEIL	76.352.4035.1	697
GEHAEUSEOBERTEIL	76.352.4035.2	697
GEHAEUSEOBERTEIL	76.352.4035.3	697
GEHAEUSEOBERTEIL	76.352.6435.0	721
GEHAEUSEOBERTEIL	76.352.6435.1	721
GEHAEUSEOBERTEIL	76.352.6435.2	721
GEHAEUSEOBERTEIL	76.352.6435.3	721
GEHAEUSEOBERTEIL	76.353.1535.0	721
GEHAEUSEOBERTEIL	76.353.1535.2	721
GEHAEUSEOBERTEIL	76.353.2535.0	721
GEHAEUSEOBERTEIL	76.353.2535.2	721
GEHAEUSEOBERTEIL	76.353.4035.0	697
GEHAEUSEOBERTEIL	76.353.4035.1	697
GEHAEUSEOBERTEIL	76.353.4035.2	697
GEHAEUSEOBERTEIL	76.353.4035.3	697
GEHAEUSEOBERTEIL	76.353.6435.0	721
GEHAEUSEOBERTEIL	76.353.6435.1	721
GEHAEUSEOBERTEIL	76.353.6435.2	721
GEHAEUSEOBERTEIL	76.353.6435.3	721
GEHAEUSEOBERTEIL	76.354.1535.0	721
GEHAEUSEOBERTEIL	76.354.1535.1	721
GEHAEUSEOBERTEIL	76.354.1535.2	721
GEHAEUSEOBERTEIL	76.354.2535.0	721
GEHAEUSEOBERTEIL	76.354.2535.1	721
GEHAEUSEOBERTEIL	76.354.2535.2	721

contents of type description

contents TYPE

Type	Part no.	section / page
GEHAEUSEOBERTEIL	76.354.4035.0	707
GEHAEUSEOBERTEIL	76.354.4035.1	707
GEHAEUSEOBERTEIL	76.354.4035.2	707
GEHAEUSEOBERTEIL	76.354.4035.3	707
GEHAEUSEOBERTEIL	76.354.6435.0	721
GEHAEUSEOBERTEIL	76.354.6435.1	721
GEHAEUSEOBERTEIL	76.354.6435.2	721
GEHAEUSEOBERTEIL	76.354.6435.3	721
GEHAEUSEOBERTEIL	76.372.0736.0	713
GEHAEUSEOBERTEIL	76.372.0736.1	713
GEHAEUSEOBERTEIL	76.372.0760.1	713
GEHAEUSEOBERTEIL	77.350.1035.0	645
GEHAEUSEOBERTEIL	77.350.1035.1	645
GEHAEUSEOBERTEIL	77.350.1035.2	645
GEHAEUSEOBERTEIL	77.350.1035.3	645
GEHAEUSEOBERTEIL	77.350.1635.0	645
GEHAEUSEOBERTEIL	77.350.1635.1	645
GEHAEUSEOBERTEIL	77.350.1635.2	645
GEHAEUSEOBERTEIL	77.350.1635.3	645
GEHAEUSEOBERTEIL	77.350.2435.0	645
GEHAEUSEOBERTEIL	77.350.2435.1	645
GEHAEUSEOBERTEIL	77.350.2435.2	645
GEHAEUSEOBERTEIL	77.350.2435.3	645
GEHAEUSEOBERTEIL	77.351.1035.0	645
GEHAEUSEOBERTEIL	77.351.1035.1	645
GEHAEUSEOBERTEIL	77.351.1035.2	645
GEHAEUSEOBERTEIL	77.351.1035.3	645
GEHAEUSEOBERTEIL	77.351.1635.0	645
GEHAEUSEOBERTEIL	77.351.1635.1	645
GEHAEUSEOBERTEIL	77.351.1635.2	645
GEHAEUSEOBERTEIL	77.351.1635.3	645
GEHAEUSEOBERTEIL	77.351.2435.0	645
GEHAEUSEOBERTEIL	77.351.2435.1	645
GEHAEUSEOBERTEIL	77.351.2435.2	645
GEHAEUSEOBERTEIL	77.351.2435.3	645
GEHAEUSEOBERTEIL	77.352.1035.0	645
GEHAEUSEOBERTEIL	77.352.1035.1	645
GEHAEUSEOBERTEIL	77.352.1035.2	645
GEHAEUSEOBERTEIL	77.352.1035.3	645
GEHAEUSEOBERTEIL	77.352.1635.0	645
GEHAEUSEOBERTEIL	77.352.1635.1	645
GEHAEUSEOBERTEIL	77.352.1635.2	645
GEHAEUSEOBERTEIL	77.352.1635.3	645
GEHAEUSEOBERTEIL	77.352.2435.0	645
GEHAEUSEOBERTEIL	77.352.2435.1	645
GEHAEUSEOBERTEIL	77.352.2435.2	645
GEHAEUSEOBERTEIL	77.352.2435.3	645
GEHAEUSEOBERTEIL	77.354.2435.0	645
GEHAEUSEOBERTEIL	77.372.1035.0	735
GEHAEUSEOBERTEIL	77.372.1635.0	735
GEHAEUSEOBERTEIL	77.374.2435.3	735
GEHAEUSEOBERTEIL	99.701.3329.7	772
GEHAEUSEOBERTEIL	99.703.3329.7	772
GEHAEUSEOBERTEIL	99.705.3329.7	772
GEHAEUSEOBERTEIL	99.707.3329.7	772
GEHAEUSEOBERTEIL	99.710.3329.7	773
GEHAEUSEOBERTEIL	99.711.3329.7	773
GEHAEUSEOBERTEIL	99.713.3329.7	773
GEHAEUSEOBERTEIL	99.716.3329.7	773
GEHAEUSEOBERTEILE	70.353.0635.1	633
GEHAEUSEUNTERTEIL	70.320.0628.0	634
GEHAEUSEUNTERTEIL	70.320.0628.9	770
GEHAEUSEUNTERTEIL	70.320.1028.0	638
GEHAEUSEUNTERTEIL	70.320.1028.9	770
GEHAEUSEUNTERTEIL	70.320.1628.0	638
GEHAEUSEUNTERTEIL	70.320.1628.9	770
GEHAEUSEUNTERTEIL	70.320.2428.0	638
GEHAEUSEUNTERTEIL	70.320.2428.9	770
GEHAEUSEUNTERTEIL	70.320.3228.0	638
GEHAEUSEUNTERTEIL	70.320.4828.0	634
GEHAEUSEUNTERTEIL	70.320.4828.9	770
GEHAEUSEUNTERTEIL	70.325.0628.0	635
GEHAEUSEUNTERTEIL	70.325.0628.9	771
GEHAEUSEUNTERTEIL	70.325.1028.0	639
GEHAEUSEUNTERTEIL	70.325.1028.9	771
GEHAEUSEUNTERTEIL	70.325.1628.0	639
GEHAEUSEUNTERTEIL	70.325.1628.9	771
GEHAEUSEUNTERTEIL	70.325.2428.0	639
GEHAEUSEUNTERTEIL	70.325.2428.9	771
GEHAEUSEUNTERTEIL	70.325.4828.0	635
GEHAEUSEUNTERTEIL	70.325.4828.9	771
GEHAEUSEUNTERTEIL	70.330.0628.9	770
GEHAEUSEUNTERTEIL	70.330.0635.0	634
GEHAEUSEUNTERTEIL	70.330.0635.1	634
GEHAEUSEUNTERTEIL	70.330.1028.9	770
GEHAEUSEUNTERTEIL	70.330.1035.0	638
GEHAEUSEUNTERTEIL	70.330.1035.1	638
GEHAEUSEUNTERTEIL	70.330.1635.0	638
GEHAEUSEUNTERTEIL	70.330.1635.1	638
GEHAEUSEUNTERTEIL	70.330.2428.9	770
GEHAEUSEUNTERTEIL	70.330.2435.0	638
GEHAEUSEUNTERTEIL	70.330.2435.1	638
GEHAEUSEUNTERTEIL	70.331.0628.9	770
GEHAEUSEUNTERTEIL	70.331.0635.0	634
GEHAEUSEUNTERTEIL	70.331.0635.1	634
GEHAEUSEUNTERTEIL	70.331.1028.9	770
GEHAEUSEUNTERTEIL	70.331.1035.0	638
GEHAEUSEUNTERTEIL	70.331.1035.1	638
GEHAEUSEUNTERTEIL	70.331.1635.0	638
GEHAEUSEUNTERTEIL	70.331.1635.1	638
GEHAEUSEUNTERTEIL	70.331.2428.9	770
GEHAEUSEUNTERTEIL	70.331.2435.0	638
GEHAEUSEUNTERTEIL	70.331.2435.1	638
GEHAEUSEUNTERTEIL	70.331.4828.9	770
GEHAEUSEUNTERTEIL	70.331.4835.0	634
GEHAEUSEUNTERTEIL	70.331.4835.1	634
GEHAEUSEUNTERTEIL	70.331.4835.3	634
GEHAEUSEUNTERTEIL	70.333.0628.9	771
GEHAEUSEUNTERTEIL	70.333.0635.0	635
GEHAEUSEUNTERTEIL	70.333.0635.1	635
GEHAEUSEUNTERTEIL	70.333.1028.9	771
GEHAEUSEUNTERTEIL	70.333.1035.0	639
GEHAEUSEUNTERTEIL	70.333.1035.1	639
GEHAEUSEUNTERTEIL	70.333.1635.0	639
GEHAEUSEUNTERTEIL	70.333.1635.1	639
GEHAEUSEUNTERTEIL	70.333.2428.9	771
GEHAEUSEUNTERTEIL	70.333.2435.0	639
GEHAEUSEUNTERTEIL	70.333.2435.1	639
GEHAEUSEUNTERTEIL	70.340.0628.9	771
GEHAEUSEUNTERTEIL	70.340.0635.0	635
GEHAEUSEUNTERTEIL	70.340.0635.1	635
GEHAEUSEUNTERTEIL	70.340.1028.9	771
GEHAEUSEUNTERTEIL	70.340.1035.0	639
GEHAEUSEUNTERTEIL	70.340.1035.1	639
GEHAEUSEUNTERTEIL	70.340.1635.0	639
GEHAEUSEUNTERTEIL	70.340.1635.1	639
GEHAEUSEUNTERTEIL	70.340.2428.9	771
GEHAEUSEUNTERTEIL	70.340.2435.0	639
GEHAEUSEUNTERTEIL	70.340.2435.1	639
GEHAEUSEUNTERTEIL	70.341.0628.9	771
GEHAEUSEUNTERTEIL	70.341.0635.0	635
GEHAEUSEUNTERTEIL	70.341.0635.1	635
GEHAEUSEUNTERTEIL	70.341.1028.9	771
GEHAEUSEUNTERTEIL	70.341.1035.0	639
GEHAEUSEUNTERTEIL	70.341.1035.1	639
GEHAEUSEUNTERTEIL	70.341.1635.0	639
GEHAEUSEUNTERTEIL	70.341.1635.1	639
GEHAEUSEUNTERTEIL	70.341.2428.9	771
GEHAEUSEUNTERTEIL	70.341.2435.0	639
GEHAEUSEUNTERTEIL	70.341.2435.1	639
GEHAEUSEUNTERTEIL	70.341.4828.9	771
GEHAEUSEUNTERTEIL	70.341.4835.1	635
GEHAEUSEUNTERTEIL	70.341.4835.3	635
GEHAEUSEUNTERTEIL	70.342.0628.9	771
GEHAEUSEUNTERTEIL	70.342.0635.0	635
GEHAEUSEUNTERTEIL	70.342.0635.1	635
GEHAEUSEUNTERTEIL	70.342.1028.9	771
GEHAEUSEUNTERTEIL	70.342.1035.0	639
GEHAEUSEUNTERTEIL	70.342.1035.1	639
GEHAEUSEUNTERTEIL	70.342.1635.0	639
GEHAEUSEUNTERTEIL	70.342.1635.1	639
GEHAEUSEUNTERTEIL	70.342.2428.9	771
GEHAEUSEUNTERTEIL	70.342.2435.0	639
GEHAEUSEUNTERTEIL	70.342.2435.1	639
GEHAEUSEUNTERTEIL	70.343.0628.9	771
GEHAEUSEUNTERTEIL	70.343.0635.0	635
GEHAEUSEUNTERTEIL	70.343.0635.1	635
GEHAEUSEUNTERTEIL	70.343.1035.0	639
GEHAEUSEUNTERTEIL	70.343.1035.1	639
GEHAEUSEUNTERTEIL	70.343.1635.0	639
GEHAEUSEUNTERTEIL	70.343.1635.1	639
GEHAEUSEUNTERTEIL	70.343.2428.9	771
GEHAEUSEUNTERTEIL	70.343.2435.0	639
GEHAEUSEUNTERTEIL	70.343.2435.1	639
GEHAEUSEUNTERTEIL	70.344.4828.9	771
GEHAEUSEUNTERTEIL	70.344.4835.1	635
GEHAEUSEUNTERTEIL	71.320.1028.0	634
GEHAEUSEUNTERTEIL	71.320.1628.0	634
GEHAEUSEUNTERTEIL	71.320.2428.0	634
GEHAEUSEUNTERTEIL	71.325.1028.0	635
GEHAEUSEUNTERTEIL	71.325.1628.0	635
GEHAEUSEUNTERTEIL	71.325.2428.0	635
GEHAEUSEUNTERTEIL	71.330.1035.0	634
GEHAEUSEUNTERTEIL	71.330.1035.1	634
GEHAEUSEUNTERTEIL	71.330.1635.0	634
GEHAEUSEUNTERTEIL	71.330.1635.1	634
GEHAEUSEUNTERTEIL	71.330.2435.0	634
GEHAEUSEUNTERTEIL	71.330.2435.1	634
GEHAEUSEUNTERTEIL	71.331.1035.0	634
GEHAEUSEUNTERTEIL	71.331.1035.1	634
GEHAEUSEUNTERTEIL	71.331.1635.0	634
GEHAEUSEUNTERTEIL	71.331.1635.1	634
GEHAEUSEUNTERTEIL	71.331.2435.0	634
GEHAEUSEUNTERTEIL	71.331.2435.1	634
GEHAEUSEUNTERTEIL	71.333.1035.0	635
GEHAEUSEUNTERTEIL	71.333.1035.1	635
GEHAEUSEUNTERTEIL	71.333.1635.0	635
GEHAEUSEUNTERTEIL	71.333.1635.1	635
GEHAEUSEUNTERTEIL	71.333.2435.0	635
GEHAEUSEUNTERTEIL	71.333.2435.1	635
GEHAEUSEUNTERTEIL	71.340.1035.0	635
GEHAEUSEUNTERTEIL	71.340.1035.1	635
GEHAEUSEUNTERTEIL	71.340.1635.0	635
GEHAEUSEUNTERTEIL	71.340.1635.1	635
GEHAEUSEUNTERTEIL	71.340.2435.0	635
GEHAEUSEUNTERTEIL	71.340.2435.1	635
GEHAEUSEUNTERTEIL	71.341.1035.0	635
GEHAEUSEUNTERTEIL	71.341.1035.1	635
GEHAEUSEUNTERTEIL	71.341.1635.0	635
GEHAEUSEUNTERTEIL	71.341.1635.1	635
GEHAEUSEUNTERTEIL	71.341.2435.0	635
GEHAEUSEUNTERTEIL	71.341.2435.1	635
GEHAEUSEUNTERTEIL	71.342.1035.0	635
GEHAEUSEUNTERTEIL	71.342.1035.1	635
GEHAEUSEUNTERTEIL	71.342.1635.0	635
GEHAEUSEUNTERTEIL	71.342.1635.1	635
GEHAEUSEUNTERTEIL	71.342.2435.0	635
GEHAEUSEUNTERTEIL	71.342.2435.1	635
GEHAEUSEUNTERTEIL	71.343.1035.0	635
GEHAEUSEUNTERTEIL	71.343.1035.1	635
GEHAEUSEUNTERTEIL	71.343.1635.0	635
GEHAEUSEUNTERTEIL	71.343.1635.1	635
GEHAEUSEUNTERTEIL	71.343.2435.0	635
GEHAEUSEUNTERTEIL	71.343.2435.1	635
GEHAEUSEUNTERTEIL	72.320.0628.0	658
GEHAEUSEUNTERTEIL	72.320.1028.0	650
GEHAEUSEUNTERTEIL	72.320.1628.0	650
GEHAEUSEUNTERTEIL	72.320.2428.0	650
GEHAEUSEUNTERTEIL	72.325.0628.0	659
GEHAEUSEUNTERTEIL	72.325.1028.0	651
GEHAEUSEUNTERTEIL	72.325.1628.0	651
GEHAEUSEUNTERTEIL	72.325.2428.0	651
GEHAEUSEUNTERTEIL	72.330.0635.0	658
GEHAEUSEUNTERTEIL	72.330.0635.1	658
GEHAEUSEUNTERTEIL	72.330.1035.0	650
GEHAEUSEUNTERTEIL	72.330.1035.1	650
GEHAEUSEUNTERTEIL	72.330.1635.0	650
GEHAEUSEUNTERTEIL	72.330.1635.1	650
GEHAEUSEUNTERTEIL	72.330.2435.0	650
GEHAEUSEUNTERTEIL	72.330.2435.1	650
GEHAEUSEUNTERTEIL	72.331.0635.0	658
GEHAEUSEUNTERTEIL	72.331.0635.1	658
GEHAEUSEUNTERTEIL	72.331.1035.0	650
GEHAEUSEUNTERTEIL	72.331.1035.1	650
GEHAEUSEUNTERTEIL	72.331.1635.0	650
GEHAEUSEUNTERTEIL	72.331.1635.1	650
GEHAEUSEUNTERTEIL	72.331.2435.0	650
GEHAEUSEUNTERTEIL	72.331.2435.1	650
GEHAEUSEUNTERTEIL	72.333.0635.0	659
GEHAEUSEUNTERTEIL	72.333.0635.1	659
GEHAEUSEUNTERTEIL	72.333.1035.0	651
GEHAEUSEUNTERTEIL	72.333.1035.1	651
GEHAEUSEUNTERTEIL	72.333.1635.0	651
GEHAEUSEUNTERTEIL	72.333.1635.1	651
GEHAEUSEUNTERTEIL	72.333.2435.0	651
GEHAEUSEUNTERTEIL	72.333.2435.1	651
GEHAEUSEUNTERTEIL	72.340.0635.0	659
GEHAEUSEUNTERTEIL	72.340.0635.1	659
GEHAEUSEUNTERTEIL	72.340.1035.0	651
GEHAEUSEUNTERTEIL	72.340.1035.1	651
GEHAEUSEUNTERTEIL	72.340.1635.0	651
GEHAEUSEUNTERTEIL	72.340.1635.1	651
GEHAEUSEUNTERTEIL	72.340.2435.0	651
GEHAEUSEUNTERTEIL	72.340.2435.1	651
GEHAEUSEUNTERTEIL	72.341.0635.0	659
GEHAEUSEUNTERTEIL	72.341.0635.1	659
GEHAEUSEUNTERTEIL	72.341.1035.0	651
GEHAEUSEUNTERTEIL	72.341.1035.1	651
GEHAEUSEUNTERTEIL	72.341.1635.0	651
GEHAEUSEUNTERTEIL	72.341.1635.1	651
GEHAEUSEUNTERTEIL	72.341.2435.0	651
GEHAEUSEUNTERTEIL	72.341.2435.1	651
GEHAEUSEUNTERTEIL	72.342.0635.0	659
GEHAEUSEUNTERTEIL	72.342.0635.1	659
GEHAEUSEUNTERTEIL	72.342.1035.0	651
GEHAEUSEUNTERTEIL	72.342.1035.1	651
GEHAEUSEUNTERTEIL	72.342.1635.0	651
GEHAEUSEUNTERTEIL	72.342.1635.1	651
GEHAEUSEUNTERTEIL	72.342.2435.0	651
GEHAEUSEUNTERTEIL	72.342.2435.1	651
GEHAEUSEUNTERTEIL	72.343.0635.0	659
GEHAEUSEUNTERTEIL	72.343.0635.1	659
GEHAEUSEUNTERTEIL	72.343.1035.0	651
GEHAEUSEUNTERTEIL	72.343.1035.1	651
GEHAEUSEUNTERTEIL	72.343.1635.0	651
GEHAEUSEUNTERTEIL	72.343.1635.1	651
GEHAEUSEUNTERTEIL	72.343.2435.0	651
GEHAEUSEUNTERTEIL	72.343.2435.1	651
GEHAEUSEUNTERTEIL	73.326.4028.0	729
GEHAEUSEUNTERTEIL	73.326.6428.0	729
GEHAEUSEUNTERTEIL	73.327.4028.0	731
GEHAEUSEUNTERTEIL	73.327.6428.0	731
GEHAEUSEUNTERTEIL	73.330.4035.0	729
GEHAEUSEUNTERTEIL	73.330.4035.1	729
GEHAEUSEUNTERTEIL	73.330.6435.0	729
GEHAEUSEUNTERTEIL	73.330.6435.1	729
GEHAEUSEUNTERTEIL	73.331.4035.0	729
GEHAEUSEUNTERTEIL	73.331.4035.1	729
GEHAEUSEUNTERTEIL	73.331.6435.0	729
GEHAEUSEUNTERTEIL	73.331.6435.1	729
GEHAEUSEUNTERTEIL	73.333.4035.0	729
GEHAEUSEUNTERTEIL	73.333.4035.1	729
GEHAEUSEUNTERTEIL	73.333.6435.0	729
GEHAEUSEUNTERTEIL	73.333.6435.1	729
GEHAEUSEUNTERTEIL	73.334.4035.0	638
GEHAEUSEUNTERTEIL	73.334.4035.1	638
GEHAEUSEUNTERTEIL	73.334.6435.0	638
GEHAEUSEUNTERTEIL	73.334.6435.1	638
GEHAEUSEUNTERTEIL	73.335.4035.0	638
GEHAEUSEUNTERTEIL	73.335.4035.1	638
GEHAEUSEUNTERTEIL	73.335.6435.0	638
GEHAEUSEUNTERTEIL	73.335.6435.1	638
GEHAEUSEUNTERTEIL	73.337.4035.0	639
GEHAEUSEUNTERTEIL	73.337.4035.1	639
GEHAEUSEUNTERTEIL	73.337.6435.0	639
GEHAEUSEUNTERTEIL	73.337.6435.1	639
GEHAEUSEUNTERTEIL	73.340.4035.0	731
GEHAEUSEUNTERTEIL	73.340.4035.1	731
GEHAEUSEUNTERTEIL	73.340.6435.0	731
GEHAEUSEUNTERTEIL	73.340.6435.1	731
GEHAEUSEUNTERTEIL	73.341.4035.0	731
GEHAEUSEUNTERTEIL	73.341.4035.1	731
GEHAEUSEUNTERTEIL	73.341.6435.0	731
GEHAEUSEUNTERTEIL	73.341.6435.1	731
GEHAEUSEUNTERTEIL	73.342.4035.0	731
GEHAEUSEUNTERTEIL	73.342.4035.1	731
GEHAEUSEUNTERTEIL	73.342.6435.0	731
GEHAEUSEUNTERTEIL	73.342.6435.1	731
GEHAEUSEUNTERTEIL	73.343.4035.0	731
GEHAEUSEUNTERTEIL	73.343.4035.1	731
GEHAEUSEUNTERTEIL	73.343.6435.0	731

contents

Type	Part no.	section / page
GEHAEUSEUNTERTEIL	73.343.6435.1	731
GEHAEUSEUNTERTEIL	73.344.4035.0	639
GEHAEUSEUNTERTEIL	73.344.4035.1	639
GEHAEUSEUNTERTEIL	73.344.6435.0	639
GEHAEUSEUNTERTEIL	73.344.6435.1	639
GEHAEUSEUNTERTEIL	73.345.4035.0	639
GEHAEUSEUNTERTEIL	73.345.4035.1	639
GEHAEUSEUNTERTEIL	73.345.6435.0	639
GEHAEUSEUNTERTEIL	73.345.6435.1	639
GEHAEUSEUNTERTEIL	73.346.4035.0	639
GEHAEUSEUNTERTEIL	73.346.4035.1	639
GEHAEUSEUNTERTEIL	73.346.6435.0	639
GEHAEUSEUNTERTEIL	73.346.6435.1	639
GEHAEUSEUNTERTEIL	73.347.4035.0	639
GEHAEUSEUNTERTEIL	73.347.4035.1	639
GEHAEUSEUNTERTEIL	73.347.6435.0	639
GEHAEUSEUNTERTEIL	73.347.6435.1	639
GEHAEUSEUNTERTEIL	76.320.0729.0	713
GEHAEUSEUNTERTEIL	76.320.0753.0	713
GEHAEUSEUNTERTEIL	76.320.1528.0	723
GEHAEUSEUNTERTEIL	76.320.2528.0	723
GEHAEUSEUNTERTEIL	76.321.0729.0	713
GEHAEUSEUNTERTEIL	76.321.0753.0	713
GEHAEUSEUNTERTEIL	76.322.0736.0	713
GEHAEUSEUNTERTEIL	76.322.0736.1	713
GEHAEUSEUNTERTEIL	76.322.0760.1	713
GEHAEUSEUNTERTEIL	76.325.1528.0	725
GEHAEUSEUNTERTEIL	76.325.2528.0	725
GEHAEUSEUNTERTEIL	76.326.4028.0	723
GEHAEUSEUNTERTEIL	76.326.6428.0	723
GEHAEUSEUNTERTEIL	76.327.4028.0	725
GEHAEUSEUNTERTEIL	76.327.6428.0	725
GEHAEUSEUNTERTEIL	76.330.1535.0	723
GEHAEUSEUNTERTEIL	76.330.1535.1	723
GEHAEUSEUNTERTEIL	76.330.2535.0	723
GEHAEUSEUNTERTEIL	76.330.2535.1	723
GEHAEUSEUNTERTEIL	76.330.4035.0	723
GEHAEUSEUNTERTEIL	76.330.4035.1	723
GEHAEUSEUNTERTEIL	76.330.6435.0	723
GEHAEUSEUNTERTEIL	76.330.6435.1	723
GEHAEUSEUNTERTEIL	76.331.1535.0	723
GEHAEUSEUNTERTEIL	76.331.1535.1	723
GEHAEUSEUNTERTEIL	76.331.2535.0	723
GEHAEUSEUNTERTEIL	76.331.2535.1	723
GEHAEUSEUNTERTEIL	76.331.4035.0	723
GEHAEUSEUNTERTEIL	76.331.4035.1	723
GEHAEUSEUNTERTEIL	76.331.6435.0	723
GEHAEUSEUNTERTEIL	76.331.6435.1	723
GEHAEUSEUNTERTEIL	76.333.4035.0	723
GEHAEUSEUNTERTEIL	76.333.4035.1	723
GEHAEUSEUNTERTEIL	76.333.6435.0	723
GEHAEUSEUNTERTEIL	76.333.6435.1	723
GEHAEUSEUNTERTEIL	76.334.1535.0	723
GEHAEUSEUNTERTEIL	76.334.1535.1	723
GEHAEUSEUNTERTEIL	76.334.2535.0	723
GEHAEUSEUNTERTEIL	76.334.2535.1	723
GEHAEUSEUNTERTEIL	76.334.4035.0	634
GEHAEUSEUNTERTEIL	76.334.4035.1	634
GEHAEUSEUNTERTEIL	76.334.6435.0	634
GEHAEUSEUNTERTEIL	76.334.6435.1	634
GEHAEUSEUNTERTEIL	76.335.1535.0	723
GEHAEUSEUNTERTEIL	76.335.1535.1	723
GEHAEUSEUNTERTEIL	76.335.2535.0	723
GEHAEUSEUNTERTEIL	76.335.2535.1	723
GEHAEUSEUNTERTEIL	76.335.4035.0	634
GEHAEUSEUNTERTEIL	76.335.4035.1	634
GEHAEUSEUNTERTEIL	76.335.6435.0	634
GEHAEUSEUNTERTEIL	76.335.6435.1	634
GEHAEUSEUNTERTEIL	76.337.4035.0	635
GEHAEUSEUNTERTEIL	76.337.4035.1	635
GEHAEUSEUNTERTEIL	76.337.6435.0	635
GEHAEUSEUNTERTEIL	76.337.6435.1	635
GEHAEUSEUNTERTEIL	76.340.4035.0	725
GEHAEUSEUNTERTEIL	76.340.6435.0	725
GEHAEUSEUNTERTEIL	76.341.4035.0	725
GEHAEUSEUNTERTEIL	76.341.6435.0	725
GEHAEUSEUNTERTEIL	76.342.4035.0	725
GEHAEUSEUNTERTEIL	76.342.6435.0	725
GEHAEUSEUNTERTEIL	76.343.4035.0	725
GEHAEUSEUNTERTEIL	76.343.6435.0	725
GEHAEUSEUNTERTEIL	76.344.4035.0	635
GEHAEUSEUNTERTEIL	76.344.4035.1	635
GEHAEUSEUNTERTEIL	76.344.6435.0	635
GEHAEUSEUNTERTEIL	76.344.6435.1	635
GEHAEUSEUNTERTEIL	76.345.4035.0	635
GEHAEUSEUNTERTEIL	76.345.4035.1	635
GEHAEUSEUNTERTEIL	76.345.6435.0	635
GEHAEUSEUNTERTEIL	76.345.6435.1	635
GEHAEUSEUNTERTEIL	76.346.4035.0	635
GEHAEUSEUNTERTEIL	76.346.4035.1	635
GEHAEUSEUNTERTEIL	76.346.6435.0	635
GEHAEUSEUNTERTEIL	76.346.6435.1	635
GEHAEUSEUNTERTEIL	76.347.4035.0	635
GEHAEUSEUNTERTEIL	76.347.4035.1	635
GEHAEUSEUNTERTEIL	76.347.6435.0	635
GEHAEUSEUNTERTEIL	76.347.6435.1	635
GEHAEUSEUNTERTEIL	77.320.1028.0	646
GEHAEUSEUNTERTEIL	77.320.1628.0	646
GEHAEUSEUNTERTEIL	77.320.2428.0	646
GEHAEUSEUNTERTEIL	77.325.1028.0	647
GEHAEUSEUNTERTEIL	77.325.1628.0	647
GEHAEUSEUNTERTEIL	77.325.2428.0	647
GEHAEUSEUNTERTEIL	77.330.1035.0	646
GEHAEUSEUNTERTEIL	77.330.1035.1	646
GEHAEUSEUNTERTEIL	77.330.1635.0	646
GEHAEUSEUNTERTEIL	77.330.1635.1	646
GEHAEUSEUNTERTEIL	77.330.2435.0	646

Type	Part no.	section / page
GEHAEUSEUNTERTEIL	77.330.2435.1	646
GEHAEUSEUNTERTEIL	77.331.1035.0	646
GEHAEUSEUNTERTEIL	77.331.1035.1	646
GEHAEUSEUNTERTEIL	77.331.1635.0	646
GEHAEUSEUNTERTEIL	77.331.1635.1	646
GEHAEUSEUNTERTEIL	77.331.2435.0	646
GEHAEUSEUNTERTEIL	77.331.2435.1	646
GEHAEUSEUNTERTEIL	77.333.1035.0	647
GEHAEUSEUNTERTEIL	77.333.1035.1	647
GEHAEUSEUNTERTEIL	77.333.1635.0	647
GEHAEUSEUNTERTEIL	77.333.1635.1	647
GEHAEUSEUNTERTEIL	77.333.2435.0	647
GEHAEUSEUNTERTEIL	77.333.2435.1	647
GEHAEUSEUNTERTEIL	77.340.1035.0	647
GEHAEUSEUNTERTEIL	77.340.1035.1	647
GEHAEUSEUNTERTEIL	77.340.1635.0	647
GEHAEUSEUNTERTEIL	77.340.1635.1	647
GEHAEUSEUNTERTEIL	77.340.2435.0	647
GEHAEUSEUNTERTEIL	77.340.2435.1	647
GEHAEUSEUNTERTEIL	77.341.1035.0	647
GEHAEUSEUNTERTEIL	77.341.1035.1	647
GEHAEUSEUNTERTEIL	77.341.1635.0	647
GEHAEUSEUNTERTEIL	77.341.1635.1	647
GEHAEUSEUNTERTEIL	77.341.2435.0	647
GEHAEUSEUNTERTEIL	77.341.2435.1	647
GEHAEUSEUNTERTEIL	77.342.1035.0	647
GEHAEUSEUNTERTEIL	77.342.1035.1	647
GEHAEUSEUNTERTEIL	77.342.1635.0	647
GEHAEUSEUNTERTEIL	77.342.1635.1	647
GEHAEUSEUNTERTEIL	77.342.2435.0	647
GEHAEUSEUNTERTEIL	77.342.2435.1	647
GEHAEUSEUNTERTEIL	77.343.1035.0	647
GEHAEUSEUNTERTEIL	77.343.1035.1	647
GEHAEUSEUNTERTEIL	77.343.1635.0	647
GEHAEUSEUNTERTEIL	77.343.1635.1	647
GEHAEUSEUNTERTEIL	77.343.2435.0	647
GEHAEUSEUNTERTEIL	77.343.2435.1	647
GEHAEUSEUNTERTEIL	99.700.3329.7	773
GEHAEUSEUNTERTEIL	99.702.3329.7	773
GEHAEUSEUNTERTEIL	99.704.3329.7	773
GEHAEUSEUNTERTEIL	99.706.3329.7	773
GLEITMUTTER	05.516.9510.0	215
GRUNDZANGE	95.101.0800.0	291
GRUNDZANGE	95.101.0800.0	631
GRUNDZANGE	95.101.0800.0	798
GUMMISTOPFEN GR.	05.562.3283.0	755
GUMMISTOPFEN KL.	05.562.3183.0	755
HALTEFEDER	05.549.0500.0	128
HALTERAHMEN 10	Z5.574.1053.0	782
HALTERAHMEN 16	Z5.574.1653.0	782
HALTERAHMEN 24	Z5.574.2453.0	782
HALTERAHMEN 2x6	Z5.574.1253.0	782
HALTERAHMEN 6	Z5.574.0653.0	782
HOCHPOL.	05.502.0000.0	683
IN 46228-A35 -18	06.600.5027.0	796
ISOL.VERB.KAMM	Z7.258.1225.0	416
ISOL.VERB.KAMM	Z7.258.1225.0	781
ISOL.VERB.KAMM	Z7.258.1325.0	781
ISOL.VERB.KAMM	Z7.258.1425.0	781
ISOL.VERB.KAMM	Z7.258.1525.0	781
ISOL.VERB.KAMM	Z7.258.1625.0	781
ISOL.VERB.KAMM	Z7.258.1725.0	781
ISOL.VERB.KAMM	Z7.258.1825.0	781
ISOL.VERB.KAMM	Z7.258.1925.0	781
ISOL.VERB.KAMM	Z7.258.2025.0	781
ISOL.VERB.ST.	Z7.258.0225.0	204
ISOL.VERB.ST.	Z7.258.0325.0	204
ISOL.VERB.ST.	Z7.258.1025.0	204
ISOLIERGEHAEUSE	01.001.5053.0	584
ISOLIERGEHAEUSE	01.001.5153.0	584
ISOLIERGEHAEUSE	01.001.5353.0	586
ISOLIERGEHAEUSE	01.001.5453.0	586
ISOLIERGEHAEUSE	01.001.5653.0	588
ISOLIERGEHAEUSE	01.001.5753.0	588
ISOLIERGEHAEUSE	01.001.5853.0	588
ISOLIERGEHAEUSE	01.001.6553.0	590
ISOLIERGEHAEUSE	01.001.6653.0	590
ISOLIERGEHAEUSE	01.001.6753.0	590
IVB 0,5 WK4.. - 2	Z7.255.0227.0	86
IVB 0,5 WK4.. - 3	Z7.255.0327.0	86
IVB 0,5 WK4.. - 4	Z7.255.0427.0	86
IVB 0,5 WK4.. - 5	Z7.255.0527.0	86
IVB 0,5 WK4.. - 6	Z7.255.0627.0	86
IVB 0,5 WK4.. - 7	Z7.255.0727.0	86
IVB 0,5 WK4.. - 8	Z7.255.0827.0	86
IVB 0,5 WK4.. - 9	Z7.255.0927.0	86
IVB 0,5 WK4.. - 10	Z7.255.1027.0	86
IVB 0,5 WK4.. - 11	Z7.255.1127.0	86
IVB 0,5 WK4.. - 12	Z7.255.1227.0	86
IVB 1 WK4.. - 2	Z7.255.4227.0	86
IVB 1 WK4.. - 3	Z7.255.4327.0	86
IVB 1 WK4.. - 4	Z7.255.4427.0	86
IVB 1 WK4.. - 5	Z7.255.4527.0	86
IVB 1 WK4.. - 6	Z7.255.4627.0	86
IVB 1 WK4.. - 7	Z7.255.4727.0	86
IVB 1 WK4.. - 8	Z7.255.4827.0	86
IVB 1 WK4.. - 9	Z7.255.4927.0	86
IVB 1 WK4.. - 10	Z7.255.5027.0	86
IVB 1 WK4.. - 11	Z7.255.5127.0	86
IVB 1 WK4.. - 12	Z7.255.5227.0	86
IVB WK 4/D..- 2	Z7.281.7227.0	112
IVB WK 4/D..- 3	Z7.281.7327.0	112
IVB WK 4/D..- 4	Z7.281.7427.0	162
IVB WK 4/D..- 5	Z7.281.7527.0	162
IVB WK 4/D..- 6	Z7.281.7627.0	162
IVB WK 4/D..- 7	Z7.281.7727.0	162
IVB WK 4/D..- 8	Z7.281.7827.0	162

Type	Part no.	section / page
IVB WK 4/D..- 9	Z7.281.7927.0	162
IVB WK 4/D..-10	Z7.281.8027.0	162
IVB WK 4/D..-11	Z7.281.8127.0	162
IVB WK 4/D..-12	Z7.281.8227.0	112
IVB WK 4/DEU- 2	Z7.271.0227.0	113
IVB WK 4/DEU- 3	Z7.271.0327.0	113
IVB WK 4/DEU- 4	Z7.271.0427.0	162
IVB WK 4/DEU- 5	Z7.271.0527.0	162
IVB WK 4/DEU- 6	Z7.271.0627.0	162
IVB WK 4/DEU- 7	Z7.271.0727.0	162
IVB WK 4/DEU- 8	Z7.271.0827.0	162
IVB WK 4/DEU- 9	Z7.271.0927.0	162
IVB WK 4/DEU-10	Z7.271.1027.0	162
IVB WK 4/DEU-11	Z7.271.1127.0	162
IVB WK 4/DEU-12	Z7.271.1227.0	113
IVB WK 2,5-3D- 2	Z7.270.0227.0	118
IVB WK 2,5-3D- 3	Z7.270.0327.0	118
IVB WK 2,5-3D- 4	Z7.270.0427.0	162
IVB WK 2,5-3D- 5	Z7.270.0527.0	162
IVB WK 2,5-3D- 6	Z7.270.0627.0	162
IVB WK 2,5-3D- 7	Z7.270.0727.0	162
IVB WK 2,5-3D- 8	Z7.270.0827.0	162
IVB WK 2,5-3D- 9	Z7.270.0927.0	162
IVB WK 2,5-3D- 10	Z7.270.1027.0	162
IVB WK 2,5-3D- 11	Z7.270.1127.0	162
IVB WK 2,5-3D- 12	Z7.270.1227.0	118
IVB WK 2,5-3D- M-70	Z7.270.0027.0	162
IVB WK 2,5-K 6 BLAU	Z7.267.0627.6	160
IVB WK 2,5-K 6 BLAU	Z7.267.1127.6	160
IVB WK 2,5-K 6 ROT	Z7.267.0627.5	160
IVB WK 2,5-K 7 BLAU	Z7.267.0727.6	160
IVB WK 2,5-K 7 ROT	Z7.267.0727.5	160
IVB WK 2,5-K 9 BLAU	Z7.267.0927.6	160
IVB WK 2,5-K 9 ROT	Z7.267.0927.5	160
IVB WK 2,5-K 11 ROT	Z7.267.1127.5	160
IVB WK 2,5-K- 2 BLAU	Z7.267.0227.6	118
IVB WK 2,5-K- 2 ROT	Z7.267.0227.5	118
IVB WK 2,5-K- 3 BLAU	Z7.267.0327.6	160
IVB WK 2,5-K- 3 ROT	Z7.267.0327.5	160
IVB WK 2,5-K- 4 BLAU	Z7.267.0427.6	160
IVB WK 2,5-K- 4 ROT	Z7.267.0427.5	160
IVB WK 2,5-K- 5 BLAU	Z7.267.0527.6	160
IVB WK 2,5-K- 5 ROT	Z7.267.0527.5	160
IVB WK 2,5-K- 8 BLAU	Z7.267.0827.6	160
IVB WK 2,5-K- 8 ROT	Z7.267.0827.5	160
IVB WK 2,5-K- 10 BLAU	Z7.267.1027.6	160
IVB WK 2,5-K- 10 ROT	Z7.267.1027.5	160
IVB WK 2,5-K- 12 BLAU	Z7.267.1227.6	118
IVB WK 2,5-K- 12 ROT	Z7.267.1227.5	118
IVB WK 2,5-K-M-70 BLAU	Z7.267.0027.6	160
IVB WK 2,5-K-M-70 ROT	Z7.267.0027.5	160
IVB WK4 E - 2	Z7.255.2227.0	114
IVB WK4 E - 3	Z7.255.2327.0	160
IVB WK4 E - 4	Z7.255.2427.0	160
IVB WK4 E - 5	Z7.255.2527.0	160
IVB WK4 E - 6	Z7.255.2627.0	114
IVB WK4 E - 7	Z7.255.2727.0	160
IVB WK4 E - 8	Z7.255.2827.0	160
IVB WK4 E - 9	Z7.255.2927.0	160
IVB WK4 E - 10	Z7.255.3027.0	160
IVB WK4 E - 11	Z7.255.3127.0	160
IVB WK4 E - 12	Z7.255.3227.0	160
IVB WK4 E/U- 2	Z7.271.2227.0	145
IVB WK4 E/U- 3	Z7.271.2327.0	145
IVB WK4 E/U- 4	Z7.271.2427.0	162
IVB WK4 E/U- 5	Z7.271.2527.0	162
IVB WK4 E/U- 6	Z7.271.2627.0	162
IVB WK4 E/U- 7	Z7.271.2727.0	162
IVB WK4 E/U- 8	Z7.271.2827.0	162
IVB WK4 E/U- 9	Z7.271.2927.0	162
IVB WK4 E/U-10	Z7.271.3027.0	162
IVB WK4 E/U-11	Z7.271.3127.0	162
IVB WK4 E/U-12	Z7.271.3227.0	145
IVB WKI4 - 2	Z7.271.4227.0	139
IVB WKI4 - 3	Z7.271.4327.0	139
IVB WKI4 -12	Z7.271.5227.0	69
IVB WKIF 16-2	Z7.284.6227.0	25
IVBS WK4 E - 2	Z7.256.4227.0	114
IVBS WK4 E - 3	Z7.256.4327.0	160
IVBS WK4 E - 4	Z7.256.4427.0	160
IVBS WK4 E - 5	Z7.256.4527.0	160
IVBS WK4 E - 6	Z7.256.4627.0	114
IVBS WK4 E - 7	Z7.256.4727.0	160
IVBS WK4 E - 8	Z7.256.4827.0	160
IVBS WK4 E - 9	Z7.256.4927.0	160
IVBS WK4 E - 10	Z7.256.5027.0	160
IVBS WK4 E - 11	Z7.256.5127.0	160
IVBS WK4 E - 12	Z7.256.5227.0	160
IVBWK 2,5 - 2	Z7.280.2227.0	102
IVBWK 2,5 - 2	Z7.280.2227.0	310
IVBWK 2,5 - 3	Z7.280.2327.0	310
IVBWK 2,5 - 3	Z7.280.2327.0	102
IVBWK 2,5 - 4	Z7.280.2427.0	162
IVBWK 2,5 - 5	Z7.280.2527.0	162
IVBWK 2,5 - 6	Z7.280.2627.0	162
IVBWK 2,5 - 7	Z7.280.2727.0	162
IVBWK 2,5 - 8	Z7.280.2827.0	162
IVBWK 2,5 - 9	Z7.280.2927.0	162
IVBWK 2,5 -10	Z7.280.3027.0	162
IVBWK 2,5 -11	Z7.280.3127.0	162
IVBWK 2,5 -12	Z7.280.3227.0	310
IVBWK 2,5 -12	Z7.280.3227.0	102
IVBWK 4 - 2	Z7.281.1227.0	78
IVBWK 4 - 3	Z7.281.1327.0	78
IVBWK 4 - 4	Z7.281.1427.0	78
IVBWK 4 - 5	Z7.281.1527.0	78
IVBWK 4 - 6	Z7.281.1627.0	78

contents of type description

contents TYPE

Type	Part no.	section / page
IVBWK 4 - 7	Z7.281.1727.0	87
IVBWK 4 - 8	Z7.281.1827.0	87
IVBWK 4 - 9	Z7.281.1927.0	87
IVBWK 4 -10	Z7.281.2027.0	87
IVBWK 4 -11	Z7.281.2127.0	87
IVBWK 4 -12	Z7.281.2227.0	87
IVBWK 6 - 2	Z7.282.2227.0	103
IVBWK 6 - 3	Z7.282.2327.0	101
IVBWK 6 - 4	Z7.282.2427.0	163
IVBWK 6 - 5	Z7.282.2527.0	163
IVBWK 6 - 6	Z7.282.2627.0	163
IVBWK 6 - 7	Z7.282.2727.0	163
IVBWK 6 - 8	Z7.282.2827.0	163
IVBWK 6 - 9	Z7.282.2927.0	163
IVBWK 6 -10	Z7.282.3027.0	163
IVBWK 6 -11	Z7.282.3127.0	163
IVBWK 6 -12	Z7.282.3227.0	103
IVBWK 10 - 4	Z7.283.2427.0	78
IVBWKF 2,5 - 2	Z7.280.6227.0	19
IVBWKF 2,5 - 2	Z7.280.6227.0	308
IVBWKF 2,5 - 3	Z7.280.6327.0	308
IVBWKF 2,5 - 3	Z7.280.6327.0	19
IVBWKF 2,5 - 4	Z7.280.6427.0	308
IVBWKF 2,5 - 4	Z7.280.6427.0	20
IVBWKF 2,5 - 5	Z7.280.6527.0	20
IVBWKF 2,5 - 5	Z7.280.6527.0	308
IVBWKF 2,5 - 6	Z7.280.6627.0	20
IVBWKF 2,5 - 6	Z7.280.6627.0	308
IVBWKF 2,5 - 7	Z7.280.6727.0	308
IVBWKF 2,5 - 7	Z7.280.6727.0	19
IVBWKF 2,5 - 8	Z7.280.6827.0	308
IVBWKF 2,5 - 8	Z7.280.6827.0	20
IVBWKF 2,5 - 9	Z7.280.6927.0	20
IVBWKF 2,5 - 9	Z7.280.6927.0	308
IVBWKF 2,5 - 10	Z7.280.7027.0	20
IVBWKF 2,5 - 10	Z7.280.7027.0	308
IVBWKF 4 - 2	Z7.261.1227.0	20
IVBWKF 4 - 10	Z7.261.2027.0	20
IVBWKF 10- 2	Z7.283.8227.0	21
IVBWKF 16- 2	Z7.284.4227.0	21
IVBWKF 4 - 3	Z7.261.1327.0	20
IVBWKF 4 - 4	Z7.261.1427.0	20
IVBWKF 4 - 5	Z7.261.1527.0	20
IVBWKF 4 - 6	Z7.261.1627.0	20
IVBWKF 4 - 7	Z7.261.1727.0	20
IVBWKF 4 - 8	Z7.261.1827.0	20
IVBWKF 4 - 9	Z7.261.1927.0	20
IVBWKF 6- 2	Z7.282.4227.0	21
IVBWKI35 - 2	Z7.285.4227.0	79
IVBWKI35 - 3	Z7.285.4327.0	79
IVBWKI35 - 4	Z7.285.4427.0	79
IVBWKI35 - 5	Z7.285.4527.0	79
IVBWKI35 - 6	Z7.285.4627.0	79
IVBWKN10 - 2	Z7.283.2227.0	78
IVBWKN10 - 3	Z7.283.2327.0	78
IVBWKN10 - 5	Z7.283.2527.0	78
IVBWKN10 - 6	Z7.283.2627.0	78
IVBWKN10 - 7	Z7.283.2727.0	163
IVBWKN10 - 8	Z7.283.2827.0	163
IVBWKN10 - 9	Z7.283.2927.0	163
IVBWKN10 -10	Z7.283.3027.0	163
IVBWKN10 -11	Z7.283.3127.0	163
IVBWKN10 -12	Z7.283.3227.0	103
IVBWKN16 - 2	Z7.284.2227.0	104
IVBWKN16 - 3	Z7.284.2327.0	104
IVBWKN16 - 4	Z7.284.2427.0	163
IVBWKN16 - 5	Z7.284.2527.0	163
IVBWKN16 - 6	Z7.284.2627.0	163
IVBWKN16 - 7	Z7.284.2727.0	163
IVBWKN16 - 8	Z7.284.2827.0	163
IVBWKN16 - 9	Z7.284.2927.0	163
IVBWKN16 - M-30	Z7.284.2027.0	163
IVBWKN16 -10	Z7.284.3027.0	163
IVBWKN16 -11	Z7.284.3127.0	163
IVBWKN16 -12	Z7.284.3227.0	104
IVBWKN35 - 2	Z7.285.2227.0	105
IVBWKN35 - 3	Z7.285.2327.0	105
IVBWKN35 - 4	Z7.285.2427.0	163
IVBWKN35 - 5	Z7.285.2527.0	163
IVBWKN35 - 6	Z7.285.2627.0	163
IVBWKN35 - 7	Z7.285.2727.0	163
IVBWKN35 - 8	Z7.285.2827.0	163
IVBWKN35 - 9	Z7.285.2927.0	163
IVBWKN35 - M-20	Z7.285.2027.0	163
IVBWKN35 -10	Z7.285.3027.0	163
IVBWKN35 -11	Z7.285.3127.0	163
IVBWKN35 -12	Z7.285.3227.0	105
IVK WK 4/DEU- 2	Z7.256.2227.0	112
IVK WK 4/DEU- 6	Z7.256.2627.0	112
K 15,5 - 20,5	Z2.803.2228.0	210
K 19 - 27	Z2.803.2328.0	210
K 26 - 34	Z2.803.2428.0	210
KABELVERSCHRB.	Z5.507.1321.0	776
KABELVERSCHRB.	Z5.507.1521.0	776
KABELVERSCHRB.	Z5.507.1721.0	776
KB 1 RM 5.08	Z8.000.0103.4	460
KBD 1 / 2 KR	28.121.0240.0	266
KBD 1 / 3 KR	28.121.0340.0	266
KBD 1 / 4 KR	28.121.0440.0	266
KBD 1 / 5 KR	28.121.0540.0	266
KBD 1 / 6 KR	28.121.0640.0	266
KBD 1 / 8 KR	28.121.0840.0	266
KBD 1 /10 KR	28.121.1040.0	266
KBD 1 /12 KR	28.121.1240.0	266
KL 16 / 12 PA	29.400.1253.0	256
KL 16 / 12 PA DS	29.401.1253.0	256
KL 16 / 16 PA	29.400.1653.0	256
KL 16 / 16 PA DS	29.401.1653.0	256
KL 16 / 20 PA	29.400.2053.0	256
KL 16 / 20 PA DS	29.401.2053.0	256
KL 16 / 4 PA	29.400.0453.0	256
KL 16 / 4 PA DS	29.401.0453.0	256
KL 16 / 6 PA	29.400.0653.0	256
KL 16 / 6 PA DS	29.401.0653.0	256
KL 16 / 8 PA	29.400.0853.0	256
KL 16 / 8 PA DS	29.401.0853.0	256
KL 20 / 2 DS PA	29.500.1253.0	264
KL 20 / 2 PA	29.500.0253.0	264
KL 20 / 4 DS PA	29.500.1353.0	264
KL 20 / 4 PA	29.500.0353.0	264
KL 24 / 2	29.500.9253.0	265
KL 24 / 3	29.500.9353.0	265
KL 24 / 3 SL	29.502.9353.0	265
KL 24 / 4	29.500.9453.0	265
KL 24 / 5	29.500.9553.0	265
KL 24 / 5 SL	29.502.9553.0	265
KL 28 / 6 DS PA	33.011.0653.0	214
KL 29 / 6 DS PA	33.041.0653.0	214
KL 30 / 3 DS PA	29.500.4053.0	265
KL 30 / 3 PA	29.500.3053.0	265
KL 58 / 3 / 1	29.130.1353.0	268
KL 58 / 3 S / 1	29.131.1353.0	269
KL 58 / 3 S R / 1	29.131.2353.0	269
KL 58 / 5 / 1	29.130.1553.0	268
KL 58 / 5 S / 1	29.131.1553.0	269
KL 58 / 5 S R / 1	29.131.2553.0	269
KL 58 / 6 / 1	29.130.1653.0	268
KL 58 / 6 S / 1	29.131.1653.0	269
KL 58 / 6 S R / 1	29.131.2653.0	269
KL.ADA. BU. 3WL	70.120.0353.3	643
KL.ADA. BU. 3WL	70.120.0353.4	643
KL.ADA. BU. 3WR	70.125.0353.3	643
KL.ADA. BU. 3WR	70.125.0353.4	643
KL.ADA. BU. 6WL	70.000.0653.0	689
KL.ADA. BU. 6WL	70.100.0653.3	631
KL.ADA. BU. 6WL	70.100.0653.4	631
KL.ADA. BU. 6WL	70.120.0653.3	643
KL.ADA. BU. 6WL	70.120.0653.4	643
KL.ADA. BU. 6WL	72.000.0653.0	693
KL.ADA. BU. 6WL	72.100.0653.0	655
KL.ADA. BU. 6WL	72.100.0653.4	655
KL.ADA. BU. 6WR	70.005.0653.0	689
KL.ADA. BU. 6WR	70.105.0653.3	631
KL.ADA. BU. 6WR	70.105.0653.4	631
KL.ADA. BU. 6WR	70.125.0653.3	643
KL.ADA. BU. 6WR	70.125.0653.4	643
KL.ADA. BU. 6WR	72.005.0653.0	693
KL.ADA. BU. 6WR	72.105.0653.0	655
KL.ADA. BU. 6WR	72.105.0653.4	655
KL.ADA. BU.10WL	70.100.1053.3	631
KL.ADA. BU.10WL	70.100.1053.4	631
KL.ADA. BU.10WL	70.120.1053.3	643
KL.ADA. BU.10WL	70.120.1053.4	643
KL.ADA. BU.10WL	72.100.1053.0	655
KL.ADA. BU.10WL	72.100.1053.4	655
KL.ADA. BU.10WR	70.105.1053.3	631
KL.ADA. BU.10WR	70.105.1053.4	631
KL.ADA. BU.10WR	70.125.1053.3	643
KL.ADA. BU.10WR	70.125.1053.4	643
KL.ADA. BU.10WR	72.105.1053.0	655
KL.ADA. BU.10WR	72.105.1053.4	655
KL.ADA. BU.16WL	70.100.1653.3	631
KL.ADA. BU.16WL	70.100.1653.4	631
KL.ADA. BU.16WL	72.100.1653.0	655
KL.ADA. BU.16WL	72.100.1653.4	655
KL.ADA. BU.16WR	70.105.1653.3	631
KL.ADA. BU.16WR	70.105.1653.4	631
KL.ADA. BU.16WR	72.105.1653.0	655
KL.ADA. BU.16WR	72.105.1653.4	655
KL.ADA. BU.24WL	70.100.2453.3	631
KL.ADA. BU.24WL	70.100.2453.4	631
KL.ADA. BU.24WL	72.100.2453.0	655
KL.ADA. BU.24WL	72.100.2453.4	655
KL.ADA. BU.24WR	70.105.2453.3	631
KL.ADA. BU.24WR	70.105.2453.4	631
KL.ADA. BU.24WR	72.105.2453.0	655
KL.ADA. BU.24WR	72.105.2453.4	655
KL.ADA. BU.40WL	73.100.4053.0	719
KL.ADA. BU.40WR	73.105.4053.0	719
KL.ADA. BU.64WL	73.100.6453.0	719
KL.ADA. BU.64WR	73.105.6453.0	719
KL.ADA. BUF 6WL	70.101.0653.0	631
KL.ADA. BUF 6WR	70.106.0653.0	631
KL.ADA. BUF10WL	70.101.1053.0	631
KL.ADA. BUF10WR	70.106.1053.0	631
KL.ADA. BUF16WL	70.101.1653.0	631
KL.ADA. BUF16WR	70.106.1653.0	631
KL.ADA. BUF24WL	70.101.2453.0	631
KL.ADA. BUF24WR	70.106.2453.0	631
KL.ADA. ST. 3WL	70.130.0353.3	643
KL.ADA. ST. 3WL	70.130.0353.4	643
KL.ADA. ST. 3WR	70.135.0353.3	643
KL.ADA. ST. 3WR	70.135.0353.4	643
KL.ADA. ST. 6WL	70.010.0653.0	689
KL.ADA. ST. 6WL	70.110.0653.3	631
KL.ADA. ST. 6WL	70.110.0653.4	631
KL.ADA. ST. 6WL	70.130.0653.3	643
KL.ADA. ST. 6WL	70.130.0653.4	643
KL.ADA. ST. 6WL	72.010.0653.0	693
KL.ADA. ST. 6WL	72.110.0653.0	655
KL.ADA. ST. 6WL	72.110.0653.4	655
KL.ADA. ST. 6WR	70.015.0653.0	689
KL.ADA. ST. 6WR	70.115.0653.3	631
KL.ADA. ST. 6WR	70.115.0653.4	631
KL.ADA. ST. 6WR	70.135.0653.3	643
KL.ADA. ST. 6WR	70.135.0653.4	643
KL.ADA. ST. 6WR	72.015.0653.0	693
KL.ADA. ST. 6WR	72.115.0653.0	655
KL.ADA. ST. 6WR	72.115.0653.4	655
KL.ADA. ST.10WL	70.110.1053.3	631
KL.ADA. ST.10WL	70.110.1053.4	631
KL.ADA. ST.10WL	70.130.1053.3	643
KL.ADA. ST.10WL	70.130.1053.4	643
KL.ADA. ST.10WL	72.110.1053.0	655
KL.ADA. ST.10WL	72.110.1053.4	655
KL.ADA. ST.10WR	70.115.1053.3	631
KL.ADA. ST.10WR	70.115.1053.4	631
KL.ADA. ST.10WR	70.135.1053.3	643
KL.ADA. ST.10WR	70.135.1053.4	643
KL.ADA. ST.10WR	72.115.1053.0	655
KL.ADA. ST.10WR	72.115.1053.4	655
KL.ADA. ST.16WL	70.110.1653.3	631
KL.ADA. ST.16WL	70.110.1653.4	631
KL.ADA. ST.16WL	72.110.1653.0	655
KL.ADA. ST.16WL	72.110.1653.4	655
KL.ADA. ST.16WR	70.115.1653.3	631
KL.ADA. ST.16WR	70.115.1653.4	631
KL.ADA. ST.16WR	72.115.1653.0	655
KL.ADA. ST.16WR	72.115.1653.4	655
KL.ADA. ST.24WL	70.110.2453.3	631
KL.ADA. ST.24WL	70.110.2453.4	631
KL.ADA. ST.24WL	72.110.2453.0	655
KL.ADA. ST.24WL	72.110.2453.4	655
KL.ADA. ST.24WR	70.115.2453.3	631
KL.ADA. ST.24WR	70.115.2453.4	631
KL.ADA. ST.24WR	72.115.2453.0	655
KL.ADA. ST.24WR	72.115.2453.4	655
KL.ADA. ST.40WL	73.110.4053.0	719
KL.ADA. ST.40WR	73.115.4053.0	719
KL.ADA. ST.64WL	73.110.6453.0	719
KL.ADA. ST.64WR	73.115.6453.0	719
KL.ADA. STF 6WL	70.111.0653.0	631
KL.ADA. STF 6WR	70.116.0653.0	631
KL.ADA. STF10WL	70.111.1053.0	631
KL.ADA. STF10WL	70.111.1653.0	631
KL.ADA. STF10WR	70.116.1053.0	631
KL.ADA. STF16WR	70.116.1653.0	631
KL.ADA. STF24WL	70.111.2453.0	631
KL.ADA. STF24WR	70.116.2453.0	631
KL.ADA. BU.4/6WR	72.107.1053.0	699
KL.ADA. ST.4/6WR	72.117.1053.0	699
KL.ADAP.BUF 3P WL	70.121.0353.0	643
KL.ADAP.BUF 3P WR	70.126.0353.0	643
KL.ADAP.BUF 3P WR	70.136.0653.0	643
KL.ADAP.BUF 3P WR	70.136.1053.0	643
KL.ADAP.BUF 6P WL	70.121.0653.0	643
KL.ADAP.BUF 6P WL	72.101.0653.0	655
KL.ADAP.BUF 6P WR	70.126.0653.0	643
KL.ADAP.BUF 6P WR	72.106.0653.0	655
KL.ADAP.BUF10P WL	70.121.1053.0	643
KL.ADAP.BUF10P WL	72.101.1053.0	655
KL.ADAP.BUF10P WR	70.126.1053.0	643
KL.ADAP.BUF10P WR	72.106.1053.0	655
KL.ADAP.BUF16P WL	72.101.1653.0	655
KL.ADAP.BUF16P WR	72.106.1653.0	655
KL.ADAP.BUF24P WL	72.101.2453.0	655
KL.ADAP.BUF24P WR	72.106.2453.0	655
KL.ADAP.STF 3P WL	70.131.0353.0	643
KL.ADAP.STF 3P WR	70.136.0353.0	643
KL.ADAP.STF 6P WL	70.131.0653.0	643
KL.ADAP.STF 6P WL	72.111.0653.0	655
KL.ADAP.STF 6P WR	72.116.0653.0	655
KL.ADAP.STF10P WL	70.131.1053.0	643
KL.ADAP.STF10P WL	72.111.1053.0	655
KL.ADAP.STF10P WR	72.116.1053.0	655
KL.ADAP.STF16P WL	72.111.1653.0	655
KL.ADAP.STF16P WR	72.116.1653.0	655
KL.ADAP.STF24P WL	72.111.2453.0	655
KL.ADAP.STF24P WR	72.116.2453.0	655
KL.LST.BEZ. TS15	Z7.311.2753.0	167
KL17 N/ 1 /S6,3	29.608.0153.0	267
KL17 N/ 1 K/S6,3	29.608.3153.0	267
KL17 N/ 2 /S6,3	29.608.0253.0	267
KL17 N/ 2 K/S6,3	29.608.3253.0	267
KL17 N/ 3 /S6,3	29.608.0353.0	267
KL17 N/ 3 K/S6,3	29.608.3353.0	267
KL17 N/ 4 /S6,3	29.608.0453.0	267
KL17 N/ 4 K/S6,3	29.608.3453.0	267
KL17 N/ 5 S6,3	29.608.0553.0	267
KL17 N/ 5 K/S6,3	29.608.3553.0	267
KL17 N/ 6 /S6,3	29.608.0653.0	267
KL17 N/ 6 K/S6,3	29.608.3653.0	267
KL17 N/ 7 /S6,3	29.608.0753.0	267
KL17 N/ 7 K/S6,3	29.608.3753.0	267
KL17 N/ 8 /S6,3	29.608.0853.0	267
KL17 N/ 8 K/S6,3	29.608.3853.0	267
KL17 N/ 9 /S6,3	29.608.0953.0	267
KL17 N/ 9 K/S6,3	29.608.3953.0	267
KL17 N/10 /S6,3	29.608.1053.0	267
KL17 N/10 K/S6,3	29.608.4053.0	267
KL17 N/11 /S6,3	29.608.1153.0	267
KL17 N/11 K/S6,3	29.608.4153.0	267
KL17 N/12 /S6,3	29.608.1253.0	267
KL17 N/12 K/S6,3	29.608.4253.0	267
KL17 N/13 /S6,3	29.608.1353.0	267
KL17 N/13 K/S6,3	29.608.4353.0	267
KL17 N/14 /S6,3	29.608.1453.0	267
KL17 N/14 K/S6,3	29.608.4453.0	267
KL17 N/15 K/S6,3	29.608.4553.0	267
KL17 N/16 /S6,3	29.608.1653.0	267
KL17 N/16 K/S6,3	29.608.4653.0	267

contents

Type	Part no.	section / page
KL17 N/17 /S6,3	29.608.1753.0	267
KL17 N/18 /S6,3	29.608.1853.0	267
KL17 N/19 /S6,3	29.608.1953.0	267
KL17 N/20 /S6,3	29.608.2053.0	267
KL17 N/20 K/S6,3	29.608.5053.0	267
KL17 N/21 /S6,3	29.608.2153.0	267
KL17 N/22 /S6,3	29.608.2253.0	267
KL17 N/23 /S6,3	29.608.2353.0	267
KL17 N/24 /S6,3	29.608.2453.0	267
KL17N/15 /S6,3	29.608.1553.0	267
KLINGE	05.502.0500.0	207
KONT.AUFNAHME 1	05.502.3100.0	739
KONT.AUFNAHME 1	05.502.3100.0	798
KONT.AUFNAHME 2	05.502.3200.0	683
KONT.AUFNAHME 2	05.502.3200.0	798
KONT.AUFNAHME 3	05.502.3300.0	631
KONT.AUFNAHME 3	05.502.3300.0	798
KONTAKTFEDER	05.549.1200.0	177
KS0 11 / 1 Z KR	19.230.0040.0	216
KSQ 10 V	57.803.8053.0	509
KURZSCHLUSSTECKER	Z5.553.9400.0	176
LEITERHALTER	07.470.2256.0	258
LEITERHALTER	07.470.3256.0	258
LEL 1,5/1 WEISS	05.562.2453.0	309
LEL 1,5/1 WEISS	05.562.2453.0	33
LEL 1,5/2 GRAU	05.562.2553.0	33
LEL 1,5/2 GRAU	05.562.2553.0	309
LEL 1,5/3 SCHWARZ	05.562.2653.0	309
LEL 1,5/3 SCHWARZ	05.562.2653.0	33
LEL 2,5/1 WEISS	05.561.6553.0	19
LEL 2,5/1 WEISS	05.561.6553.0	308
LEL 2,5/2 GRAU	05.561.6653.0	308
LEL 2,5/2 GRAU	05.561.6653.0	20
LEL 2,5/3 SCHWARZ	05.561.6753.0	308
LEL 2,5/3 SCHWARZ	05.561.6753.0	19
LEL 4/1 WEISS	05.561.8553.0	20
LEL 4/2 GRAU	05.561.8653.0	20
LEL 4/3 SCHWARZ	05.561.8753.0	20
LOCHSTREIFEN	07.413.3653.0	331
LP.STIFTLEISTE	Z5.530.0225.0	318
LP.STIFTLEISTE	Z5.530.0325.0	318
LP.STIFTLEISTE	Z5.530.0425.0	318
LP.STIFTLEISTE	Z5.530.0525.0	318
LP.STIFTLEISTE	Z5.530.0625.0	318
LP.STIFTLEISTE	Z5.530.0725.0	318
LP.STIFTLEISTE	Z5.530.0825.0	318
LP.STIFTLEISTE	Z5.530.0925.0	318
LP.STIFTLEISTE	Z5.530.1025.0	318
LP.STIFTLEISTE	Z5.530.1125.0	318
LP.STIFTLEISTE	Z5.530.1225.0	318
LP.STIFTLEISTE	Z5.530.1325.0	318
LP.STIFTLEISTE	Z5.530.1425.0	318
LP.STIFTLEISTE	Z5.530.1525.0	318
LP.STIFTLEISTE	Z5.530.1625.0	318
LP.STIFTLEISTE	Z5.530.3225.0	318
LP.STIFTLEISTE	Z5.530.3325.0	318
LP.STIFTLEISTE	Z5.530.3425.0	318
LP.STIFTLEISTE	Z5.530.3525.0	318
LP.STIFTLEISTE	Z5.530.3625.0	318
LP.STIFTLEISTE	Z5.530.3725.0	318
LP.STIFTLEISTE	Z5.530.3825.0	318
LP.STIFTLEISTE	Z5.530.3925.0	318
LP.STIFTLEISTE	Z5.530.4025.0	318
LP.STIFTLEISTE	Z5.530.4125.0	318
LP.STIFTLEISTE	Z5.530.4225.0	318
LP.STIFTLEISTE	Z5.530.4325.0	318
LP.STIFTLEISTE	Z5.530.4425.0	318
LP.STIFTLEISTE	Z5.530.4525.0	318
LP.STIFTLEISTE	Z5.530.4625.0	318
LP.STIFTLEISTE	Z5.530.6225.0	318
LP.STIFTLEISTE	Z5.530.6325.0	318
LP.STIFTLEISTE	Z5.530.6425.0	318
LP.STIFTLEISTE	Z5.530.6525.0	318
LP.STIFTLEISTE	Z5.530.6625.0	318
LP.STIFTLEISTE	Z5.530.6725.0	318
LP.STIFTLEISTE	Z5.530.6825.0	318
LP.STIFTLEISTE	Z5.530.8225.0	318
LP.STIFTLEISTE	Z5.530.8325.0	318
LP.STIFTLEISTE	Z5.530.8425.0	318
LP.STIFTLEISTE	Z5.530.8525.0	318
LP.STIFTLEISTE	Z5.530.8625.0	318
LP.STIFTLEISTE	Z5.530.8725.0	318
LP.STIFTLEISTE	Z5.530.8825.0	318
LP.STIFTLEISTE	Z5.531.0225.0	316
LP.STIFTLEISTE	Z5.531.0325.0	316
LP.STIFTLEISTE	Z5.531.0425.0	316
LP.STIFTLEISTE	Z5.531.0525.0	316
LP.STIFTLEISTE	Z5.531.0625.0	316
LP.STIFTLEISTE	Z5.531.0725.0	316
LP.STIFTLEISTE	Z5.531.0825.0	316
LP.STIFTLEISTE	Z5.531.0925.0	316
LP.STIFTLEISTE	Z5.531.1025.0	316
LP.STIFTLEISTE	Z5.531.1125.0	316
LP.STIFTLEISTE	Z5.531.1225.0	316
LP.STIFTLEISTE	Z5.531.1325.0	316
LP.STIFTLEISTE	Z5.531.1425.0	316
LP.STIFTLEISTE	Z5.531.1525.0	316
LP.STIFTLEISTE	Z5.531.1625.0	316
LP.STIFTLEISTE	Z5.531.3225.0	316
LP.STIFTLEISTE	Z5.531.3325.0	316
LP.STIFTLEISTE	Z5.531.3425.0	316
LP.STIFTLEISTE	Z5.531.3525.0	316
LP.STIFTLEISTE	Z5.531.3625.0	316
LP.STIFTLEISTE	Z5.531.3725.0	316
LP.STIFTLEISTE	Z5.531.3825.0	316
LP.STIFTLEISTE	Z5.531.3925.0	316
LP.STIFTLEISTE	Z5.531.4025.0	316

Type	Part no.	section / page
LP.STIFTLEISTE	Z5.531.4125.0	316
LP.STIFTLEISTE	Z5.531.4225.0	316
LP.STIFTLEISTE	Z5.531.4325.0	316
LP.STIFTLEISTE	Z5.531.4425.0	316
LP.STIFTLEISTE	Z5.531.4525.0	316
LP.STIFTLEISTE	Z5.531.4625.0	316
LP.STIFTLEISTE	Z5.532.0225.0	317
LP.STIFTLEISTE	Z5.532.0325.0	317
LP.STIFTLEISTE	Z5.532.0425.0	317
LP.STIFTLEISTE	Z5.532.0525.0	317
LP.STIFTLEISTE	Z5.532.0625.0	317
LP.STIFTLEISTE	Z5.532.0725.0	317
LP.STIFTLEISTE	Z5.532.0825.0	317
LP.STIFTLEISTE	Z5.532.0925.0	317
LP.STIFTLEISTE	Z5.532.1025.0	317
LP.STIFTLEISTE	Z5.532.1125.0	317
LP.STIFTLEISTE	Z5.532.1225.0	317
LP.STIFTLEISTE	Z5.532.1325.0	317
LP.STIFTLEISTE	Z5.532.1425.0	317
LP.STIFTLEISTE	Z5.532.1525.0	317
LP.STIFTLEISTE	Z5.532.1625.0	317
LP.STIFTLEISTE	Z5.532.3225.0	317
LP.STIFTLEISTE	Z5.532.3325.0	317
LP.STIFTLEISTE	Z5.532.3425.0	317
LP.STIFTLEISTE	Z5.532.3525.0	317
LP.STIFTLEISTE	Z5.532.3625.0	317
LP.STIFTLEISTE	Z5.532.3725.0	317
LP.STIFTLEISTE	Z5.532.3825.0	317
LP.STIFTLEISTE	Z5.532.3925.0	317
LP.STIFTLEISTE	Z5.532.4025.0	317
LP.STIFTLEISTE	Z5.532.4125.0	317
LP.STIFTLEISTE	Z5.532.4225.0	317
LP.STIFTLEISTE	Z5.532.4325.0	317
LP.STIFTLEISTE	Z5.532.4425.0	317
LP.STIFTLEISTE	Z5.532.4525.0	317
LP.STIFTLEISTE	Z5.532.4625.0	317
LP.STIFTLEISTE	Z5.540.0225.0	319
LP.STIFTLEISTE	Z5.540.0325.0	319
LP.STIFTLEISTE	Z5.540.0425.0	319
LP.STIFTLEISTE	Z5.540.0525.0	319
LP.STIFTLEISTE	Z5.540.0625.0	319
LP.STIFTLEISTE	Z5.540.0825.0	319
LP.STIFTLEISTE	Z5.540.0925.0	319
LP.STIFTLEISTE	Z5.540.1025.0	319
LP.STIFTLEISTE	Z5.540.1125.0	319
LP.STIFTLEISTE	Z5.540.1225.0	319
LP.STIFTLEISTE	Z5.540.1325.0	319
LP.STIFTLEISTE	Z5.540.1425.0	319
LP.STIFTLEISTE	Z5.540.1525.0	319
LP.STIFTLEISTE	Z5.540.1625.0	319
LP.STIFTLEISTE	Z5.540.3225.0	319
LP.STIFTLEISTE	Z5.540.3325.0	319
LP.STIFTLEISTE	Z5.540.3425.0	319
LP.STIFTLEISTE	Z5.540.3525.0	319
LP.STIFTLEISTE	Z5.540.3625.0	319
LP.STIFTLEISTE	Z5.540.3725.0	319
LP.STIFTLEISTE	Z5.540.3825.0	319
LP.STIFTLEISTE	Z5.540.3925.0	319
LP.STIFTLEISTE	Z5.540.4025.0	319
LP.STIFTLEISTE	Z5.540.4125.0	319
LP.STIFTLEISTE	Z5.540.4225.0	319
LP.STIFTLEISTE	Z5.540.4325.0	319
LP.STIFTLEISTE	Z5.540.4425.0	319
LP.STIFTLEISTE	Z5.540.4525.0	319
LP.STIFTLEISTE	Z5.540.4625.0	319
LP.STIFTLEISTE	Z5.540.6225.0	319
LP.STIFTLEISTE	Z5.540.6325.0	319
LP.STIFTLEISTE	Z5.540.6425.0	319
LP.STIFTLEISTE	Z5.540.6525.0	319
LP.STIFTLEISTE	Z5.540.6625.0	319
LP.STIFTLEISTE	Z5.540.6725.0	319
LP.STIFTLEISTE	Z5.540.6825.0	319
LP.STIFTLEISTE	Z5.540.8225.0	319
LP.STIFTLEISTE	Z5.540.8325.0	319
LP.STIFTLEISTE	Z5.540.8425.0	319
LP.STIFTLEISTE	Z5.540.8525.0	319
LP.STIFTLEISTE	Z5.540.8625.0	319
LP.STIFTLEISTE	Z5.540.8725.0	319
LP.STIFTLEISTE	Z5.540.8825.0	319
LP.STIFTLEISTE	Z5.599.9025.0	320
LP.STIFTLEISTE	Z5.540.0725.0	319
LPB-14L-250V1A	87.040.3053.0	540
LPST 1 / 2	25.000.0256.0	330
LPST 1 / 2 OB	25.010.0256.0	330
LPST 1 / 3	25.000.0356.0	330
LPST 1 / 3 OB	25.010.0356.0	330
LPST 1 / 4	25.000.0456.0	330
LPST 1 / 4 OB	25.010.0456.0	330
LPST 1 / 5	25.000.0556.0	330
LPST 1 / 5 OB	25.010.0556.0	330
LPST 1 / 6	25.000.0656.0	330
LPST 1 / 6 OB	25.010.0656.0	330
LPST 1 / 7	25.000.0756.0	330
LPST 1 / 7 OB	25.010.0756.0	330
LPST 1 / 8	25.000.0856.0	330
LPST 1 / 8 OB	25.010.0856.0	330
LPST 1 / 9	25.000.0956.0	330
LPST 1 / 9 OB	25.010.0956.0	330
LPST 1 / 10	25.000.1056.0	330
LPST 1 / 10 OB	25.010.1056.0	330
LPST 1 / 11	25.000.1156.0	330
LPST 1 / 11 OB	25.010.1156.0	330
LPST 1 / 12	25.000.1256.0	330
LPST 1 / 12 OB	25.010.1256.0	330
LPST 1 / 13	25.000.1356.0	330
LPST 1 / 13 OB	25.010.1356.0	330
LPST 1 / 14	25.000.1456.0	330

Type	Part no.	section / page
LPST 1 / 14 OB	25.010.1456.0	330
LPST 1 / 15	25.000.1556.0	330
LPST 1 / 15 OB	25.010.1556.0	330
LPST 1 / 16	25.000.1656.0	330
LPST 1 / 16 OB	25.010.1656.0	330
LPSTL 1 / 2	25.001.0256.0	330
LPSTL 1 / 3	25.001.0356.0	330
LPSTL 1 / 4	25.001.0456.0	330
LPSTL 1 / 5	25.001.0556.0	330
LPSTL 1 / 6	25.001.0656.0	330
LPSTL 1 / 7	25.001.0756.0	330
LPSTL 1 / 8	25.001.0856.0	330
LPSTL 1 / 9	25.001.0956.0	330
LPSTL 1 / 10	25.001.1056.0	330
LPSTL 1 / 11	25.001.1156.0	330
LPSTL 1 / 12	25.001.1256.0	330
LPSTL 1 / 13	25.001.1356.0	330
LPSTL 1 / 14	25.001.1456.0	330
LPSTL 1 / 15	25.001.1556.0	330
LPSTL 1 / 16	25.001.1656.0	330
M - PB 8 SP	87.220.0853.3	482
M - PB 1 SR	87.220.1353.3	482
M - PB 4 SG	87.220.1453.3	483
M - PB 4 SP	87.220.0753.3	482
M - PB 8 SG	87.220.1553.3	483
M 16 x 1,5	Z5.507.2121.0	776
M 16 x 1,5	Z5.507.9521.0	777
M 16 x 1,5 - M 20 x 1,5	05.507.8621.0	778
M 20 x 1,5	05.507.4021.0	779
M 20 x 1,5	05.507.4053.0	779
M 20 x 1,5	Z5.507.2221.0	776
M 20 x 1,5	Z5.507.4821.0	777
M 20 x 1,5	Z5.507.5821.0	777
M 20 x 1,5	Z5.507.9621.0	777
M 20 x 1,5 IP68	Z5.507.1353.0	776
M 20 x 1,5 - M 16 x 1,5	05.507.9021.0	778
M 20 x 1,5 - M 25 x 1,5	05.507.8721.0	778
M 20 x 1,5 - PG 13,5	05.507.8121.0	779
M 20 x 1,5 - PG 16	05.507.8221.0	779
M 25 x 1,5	05.507.4121.0	779
M 25 x 1,5	05.507.4153.0	779
M 25 x 1,5	Z5.507.2321.0	776
M 25 x 1,5	Z5.507.6021.0	777
M 25 x 1,5	Z5.507.9721.0	777
M 25 x 1,5 - M 20 x 1,5	05.507.9121.0	778
M 25 x 1,5 - M 32 x 1,5	05.507.8821.0	778
M 25 x 1,5 - PG 21	05.507.8321.0	779
M 25x1,5 IP68	Z5.507.1553.0	776
M 32 x 1,5	05.507.4221.0	779
M 32 x 1,5	05.507.4253.0	779
M 32 x 1,5	Z5.507.2421.0	776
M 32 x 1,5	Z5.507.5221.0	777
M 32 x 1,5	Z5.507.6221.0	777
M 32 x 1,5	Z5.507.9821.0	777
M 32 x 1,5 IP68	Z5.507.1753.0	776
M 32 x 1,5 - M 25 x 1,5	05.507.9221.0	778
M 32 x 1,5 - M 40 x 1,5	05.507.8921.0	778
M 32 x 1,5 - PG 29	05.507.8421.0	779
M 40 x 1,5	05.507.4321.0	779
M 40 x 1,5	05.507.4353.0	779
M 40 x 1,5	Z5.507.6421.0	777
M 40 x 1,5 IP68	Z5.507.1921.0	776
M 40 x 1,5 - M 32 x 1,5	05.507.9321.0	778
M 40x1,5 IP68	Z5.507.1953.0	776
M-IAC 24	Z5.580.7800.0	482
M-IDC 24	Z5.580.8100.0	482
M25 x 1,5	Z5.507.5021.0	777
MAGAZ.M.25 BUCHS.	Z2.123.7400.0	800
MAGAZIN M. 25 BU.	Z2.123.7000.0	800
MAGAZIN M. 25 BU.	Z2.123.7100.0	800
MAGAZIN M. 25 BU.	Z2.123.7200.0	800
MAGAZIN M. 25 BU.	Z2.123.7300.0	800
MAGAZIN M. 25 ST.	Z5.543.7000.0	800
MAGAZIN M. 25 ST.	Z5.543.7100.0	800
MAGAZIN M. 25 ST.	Z5.543.7200.0	800
MAGAZIN M. 25 ST.	Z5.543.7300.0	800
MAGAZIN M. 25 ST.	Z5.543.7400.0	800
MMLEISTE6E / 5	21.310.0553.0	258
MOD. 3POL.	05.502.0910.0	741
MOD. 4POL.	05.502.0610.0	741
MOD. 5POL.	05.502.0810.0	741
MOD.10POL.	05.502.0710.0	741
MOD.20POL.	05.502.0410.0	741
MODULLOESEWZ.	05.502.1010.0	741
N SH/35/F	Z1.980.0153.0	213
OAC 3-32V/24-280V	Z8.000.0156.9	482
OBERTEIL	75.013.0051.0	758
OBERTEIL	75.013.0051.2	758
ODC 3-32V/3-200V	Z8.000.0169.9	482
ODC 3-32V/3-60V	Z8.000.0169.8	482
PG 13,5 - M 20 x 1,5	05.507.7621.0	778
PG 16 - M 20 x 1,5	05.507.7721.0	778
PG 21 - M 25 x 1,5	05.507.7821.0	778
PRESSWERKZEUG	95.101.0900.0	798
PRESSWERKZEUG	95.101.1000.0	798
PRESSWERKZEUG	95.101.1100.0	799
PRESSWERKZEUG	95.101.1200.0	799
PRUEFSTECKER	Z1.299.7153.0	189
PRUEFSTECKER	Z1.299.8153.0	176
PRUEFSTECKER	Z5.533.7121.0	357
PRUEFSTECKER	Z5.533.7221.0	357
PRUEFSTECKER	Z5.543.0153.0	358
PRUEFSTECKER	Z5.543.0253.0	358
PRUEFSTECKER VER.	Z1.299.6153.0	176
PST1-WK4	Z1.299.9253.0	177
PST1-WK4 MN	Z1.299.9453.0	177
PST10-WK4	Z1.299.9553.0	177

contents of
type description

contents TYPE

Type	Part no.	section / page
QUERSCHALTLASCHE	Z7.269.2823.0	197
QUERSCHALTLASCHE	Z7.269.2923.0	161
QUERSCHALTLASCHE	Z7.269.3023.0	189
QUERSCHALTLASCHE	Z7.269.3123.0	191
QUERSCHALTLASCHE	Z7.269.3223.0	191
QUERSCHALTLASCHE	Z7.269.3423.0	192
QUERSCHALTLASCHE	Z7.269.3523.0	190
QUERSCHALTLASCHE	Z7.269.3623.0	161
QUERSCHALTLASCHE	Z7.269.4023.0	161
QUERSCHALTLASCHE	Z7.269.4123.0	161
QUERSCHALTLASCHE	Z7.269.4223.0	161
R12- 12V-W-LED	87.220.7553.0	454
RAB - FS16 W A-S5	87.221.6653.0	566
RAB - FS16 W B-S5	87.221.6753.0	566
RAB - SS 4	87.220.1853.0	454
RAB - SS 4/2	87.220.4753.3	455
RAB - SS 8/2	87.220.4853.3	455
RAB - SS 4 M	87.221.5553.0	454
RAB-FSS 16	87.220.2253.3	454
RAB-FSS 8	87.220.1953.3	454
RASTHEBEL	05.594.3653.0	331
REDUZIERPL. 24/10	07.416.6453.0	784
REDUZIERPL. 24/16	07.416.6553.0	784
REDUZIERPL. 24/6	07.416.6353.0	784
REVOS MOD.RAHM.BU	78.000.0653.0	742
REVOS MOD.RAHM.BU	78.000.1053.0	739
REVOS MOD.RAHM.BU	78.000.1653.0	742
REVOS MOD.RAHM.BU	78.000.2453.0	742
REVOS MOD.RAHM.ST	78.010.0653.0	742
REVOS MOD.RAHM.ST	78.010.1053.0	739
REVOS MOD.RAHM.ST	78.010.1653.0	742
REVOS MOD.RAHM.ST	78.010.2453.0	742
REVOS MODULBU. 3P	78.004.0353.0	739
REVOS MODULBU. 4P	78.003.0453.0	740
REVOS MODULBU. 5P	78.003.0553.0	740
REVOS MODULBU.10P	78.002.1053.0	740
REVOS MODULBU.20P	78.001.2053.0	740
REVOS MODULST. 3P	78.014.0353.0	739
REVOS MODULST. 4P	78.013.0453.0	740
REVOS MODULST. 5P	78.013.0553.0	740
REVOS MODULST.10P	78.012.1053.0	740
REVOS MODULST.20P	78.011.2053.0	740
RFK 1 / 150 FK PA/V0	59.197.0255.0	157
RFK 1 / 150 FMK PA/V0	59.197.1255.0	157
RFK 1 / 150 FMK S35/V0	56.397.1255.0	157
RFK 1 / 150 K PA/V0	59.197.0155.0	157
RFK 1 / 185 F PA/V0	59.198.0055.0	158
RFK 1 / 185 F S35/V0	56.398.0055.0	158
RFK 1 / 185 FM PA/V0	59.198.1055.0	158
RFK 1 / 185 FM S35/V0	56.398.1055.0	158
RFK 1 / 240 F PA/V0	59.199.0055.0	159
RFK 1 / 240 F S35/V0	56.399.0055.0	159
RFK 1 / 240 FK PA/V0	59.199.0255.0	159
RFK 1 / 240 FK S35/V0	56.399.0255.0	159
RFK 1 / 240 FM PA/V0	59.199.1055.0	159
RFK 1 / 240 FM S35/V0	56.399.1055.0	159
RFK 1 / 240 FMK PA/V0	59.199.1255.0	159
RFK 1 / 240 FMK S35/V0	56.399.1255.0	159
RFK 1 / 240 K PA/V0	59.199.0155.0	159
RFK 1 / 240 K S35/V0	56.399.0155.0	159
RFK 1 / 95 F PA/V0	59.195.0055.0	156
RFK 1 / 95 F S35/V0	56.395.0055.0	156
RFK 1 / 95 FK PA/V0	59.195.0255.0	156
RFK 1 / 95 FK S35/V0	56.395.0255.0	156
RFK 1 / 95 FM PA/V0	59.195.1055.0	156
RFK 1 / 95 FM S35/V0	56.395.1055.0	156
RFK 1 / 95 FMK PA/V0	59.195.1255.0	156
RFK 1 / 95 FMK S35/V0	56.395.1255.0	156
RFK 1 / 95 K PA/V0	59.195.0155.0	156
RFK 1 / 95 K S35/V0	56.395.0155.0	156
RICOS PV-A	83.039.0000.0	416
RICOS 16 I	83.035.3000.1	416
RICOS 16 O	83.035.3200.1	419
RICOS 4AI / +-10V	83.035.4000.1	424
RICOS 4AI / 10V	83.035.4001.1	424
RICOS 4AI / 20MA	83.035.4010.1	426
RICOS 4AI / PT100	83.035.4040.1	423
RICOS 4AI / TC	83.035.4050.1	423
RICOS 4AI4AO / +-10V	83.035.4100.1	425
RICOS 4AI4AO / 10V	83.035.4101.1	425
RICOS 4AI4AO / 20MA	83.035.4110.1	427
RICOS 4AI4AO / 4-20MA	83.035.4111.1	427
RICOS 4I AC 115V	83.035.5000.1	417
RICOS 4I AC 230V	83.035.5005.1	417
RICOS 4O RELAY	83.035.5200.1	418
RICOS 8 I/O	83.035.3100.1	416
RICOS 8I 8I/O	83.035.3300.1	419
RICOS BC-CAN-DN	83.032.0000.1	411
RICOS BC-CANOPEN	83.033.0000.1	411
RICOS BC-DP	83.030.0000.1	410
RICOS BC-S	83.031.0000.1	410
RICOS CAN-DN 16 I	83.032.1000.1	429
RICOS CAN-DN 16 O	83.032.1200.1	429
RICOS CAN-DN 8 I/0	83.032.1100.1	429
RICOS CAN-DN 8I 8I/0	83.032.1300.1	429
RICOS CANOPEN 16 I	83.033.1000.1	429
RICOS CANOPEN 16 O	83.033.1200.1	429
RICOS CANOPEN 8 I/0	83.033.1100.1	429
RICOS CANOPEN 8I 8I/0	83.033.1300.1	429
RICOS COUNTER	83.035.5400.1	422
RICOS DISK BASE	05.591.3255.0	410
RICOS DP 16 I	83.030.1000.1	428
RICOS DP 16 O	83.030.1200.1	428
RICOS DP 8 I/0	83.030.1100.1	428
RICOS DP 8I 8I/0	83.030.1300.1	428
RICOS EC-CAN-DN	83.032.0001.1	415
RICOS EC-CANOPEN	83.033.0001.1	415
RICOS EC-DP	83.030.0001.1	414
RICOS EC-S	83.031.0001.1	414
RICOS MANUAL D	05.591.3389.0	410
RICOS POSITION	83.035.5410.1	422
RICOS S 16 I	83.031.1000.1	428
RICOS S 16 O	83.031.1200.1	428
RICOS S 8 I/0	83.031.1100.1	428
RICOS S 8I 8I/0	83.031.1300.1	428
RICOS SOCKET FEMALE-S	83.031.0010.0	410
RICOS SOCKET FINAL-DP	83.030.0011.0	410
RICOS SOCKET KNOT-DP	83.030.0010.0	410
RICOS SOCKET MALE-S	83.031.0011.0	410
RSV 2 BLAU	93.004.0056.6	207
RSV 2 GRAU	93.004.0056.0	207
RV A/2 L BLAU	26.500.4453.0	208
RV2 A/2 TP1 BLAU	26.500.4553.0	209
RV2 A/3 L	26.500.4153.0	208
RV2 A/3 TP1	26.500.4253.0	209
RV2 A/4 BLAU	26.500.4353.0	208
RV2 A/6	26.500.4053.0	208
RV2 S/2 L BLAU	26.500.2453.0	206
RV2 S/2 TP1 BLAU	26.500.2553.0	207
RV2 S/3 L	26.500.2153.0	206
RV2 S/3 TP1	26.500.2253.0	207
RV2 S/4 BLAU	26.500.2353.0	206
RV2 S/6	26.500.2053.0	206
SBS-4SI-230V6,3A	87.010.7453.0	540
SBS-4SI-24V6,3A	87.010.7653.0	540
SCHIENENHALTER	Z5.519.0310.0	213
SCHIENENHALTER	Z5.519.0410.0	213
SCHIENENTRAEGER	Z1.980.0040.0	211
SCHNELLMONT.GRIFF	05.582.8153.0	175
SCHNELLMONT.GRIFF	05.593.4153.0	190
SCHNELLMONT.GRIFF	05.593.5853.0	190
SCHNELLMONT.GRIFF	05.593.5953.0	191
SCHNELLMONT.GRIFF	05.594.5853.0	175
SCHNELLMONT.GRIFF	05.594.5953.0	175
SCHNELLMONT.GRIFF	05.594.6053.0	175
SCHRAUBBUCHSE	05.508.8621.0	197
SCHRAUBBUCHSE	05.508.8721.0	197
SCHRAUBBUCHSE	05.508.9721.0	197
SCHRAUBENSATZ	Z6.012.0812.0	305
SCHUTZDECKEL	Z7.409.7056.0	780
SCHUTZDECKEL	Z7.409.7156.0	780
SCHUTZDECKEL	Z7.409.7256.0	780
SCHUTZDECKEL	Z7.409.7356.0	780
SCHUTZDECKEL	Z7.409.8856.0	780
SCHUTZDECKEL	Z7.409.8956.0	780
SELBSTKLEBESCHILD	05.584.9489.0	183
SIST- GL /V0	Z1.299.4255.0	38
SIST-... /V0	Z1.299.4055.0	38
SIST-LED /V0	Z1.299.4155.0	38
SPERRBOLZ.M.FEDRG	05.513.4212.0	786
SPERRBOLZ.M.FEDRG	05.592.0621.0	786
SPERRSTUECK	05.593.7756.0	331
SPERRSTUECK	Z5.592.1252.0	788
SR - A 4	Z1.000.9153.0	485
SR - I 5	Z1.000.4753.0	485
SR 4-20 MA/UE 9,5-40VDC	57.802.3053.0	452
SSM-7E230V	87.010.2053.0	541
SSM-7E230V-250V5A	87.030.1053.0	541
SSW-V.24//RS422	57.007.0153.0	553
SSW-V.24//RS485	57.007.0253.0	554
SSW-V.24//TTY	57.007.0053.0	553
ST 2 / 2.3 ROT	Z5.553.2921.0	353
ST 2 / 2.3 ROT	Z5.553.2921.0	19
ST 2 / 4 SCHWARZ	Z5.553.3021.0	176
ST 70,3 /24 REV	Z5.571.1356.0	675
ST 70.1 / 6 REV WL	Z5.573.0156.0	675
ST 70.1 / 6 REV WR	Z5.573.1156.0	675
ST 70.1 / 6 REV U WL	Z5.573.4156.0	675
ST 70.1 / 6 REV U WR	Z5.573.5156.0	675
ST 70.1 / 6 RV WL	Z5.573.2156.0	675
ST 70.1 / 6 RV WR	Z5.573.3156.0	675
ST 70.1 / 6 RV U WL	Z5.573.6156.0	675
ST 70.1 / 6 RV U WR	Z5.573.7156.0	675
ST 70.1 /10 REV WL	Z5.573.0256.0	675
ST 70.1 /10 REV WR	Z5.573.1256.0	675
ST 70.1 /10 REV U WL	Z5.573.4256.0	675
ST 70.1 /10 REV U WR	Z5.573.5256.0	675
ST 70.1 /10 RV WL	Z5.573.2256.0	675
ST 70.1 /10 RV WR	Z5.573.3256.0	675
ST 70.1 /10 RV U WL	Z5.573.6256.0	675
ST 70.1 /10 RV U WR	Z5.573.7256.0	675
ST 70.1 /16 REV WL	Z5.573.0056.0	675
ST 70.1 /16 REV WR	Z5.573.1056.0	675
ST 70.1 /16 REV U WL	Z5.573.4056.0	675
ST 70.1 /16 REV U WR	Z5.573.5056.0	675
ST 70.1 /16 RV WL	Z5.573.2056.0	675
ST 70.1 /16 RV WR	Z5.573.3056.0	675
ST 70.1 /16 RV U WL	Z5.573.6056.0	675
ST 70.1 /16 RV U WR	Z5.573.7056.0	675
ST 70.1 /24 REV WL	Z5.573.0356.0	675
ST 70.1 /24 REV WR	Z5.573.1356.0	675
ST 70.1 /24 REV U WL	Z5.573.4356.0	675
ST 70.1 /24 REV U WR	Z5.573.5356.0	675
ST 70.1 /24 RV WL	Z5.573.2356.0	675
ST 70.1 /24 RV WR	Z5.573.3356.0	675
ST 70.1 /24 RV U WL	Z5.573.6356.0	675
ST 70.1 /24 RV U WR	Z5.573.7356.0	675
ST 70.3 / 6 REV	Z5.571.1156.0	675
ST 70.3 / 6 REVZ	Z5.571.0156.0	675
ST 70.3 / 6 RV	Z5.571.3156.0	675
ST 70.3 / 6 RVZ	Z5.571.2156.0	675
ST 70.3 /10 REV	Z5.571.1256.0	675
ST 70.3 /10 REVZ	Z5.571.0256.0	675
ST 70.3 /10 RV	Z5.571.3256.0	675
ST 70.3 /10 RVZ	Z5.571.2256.0	675
ST 70.3 /16 REV	Z5.571.1056.0	675
ST 70.3 /16 REVZ	Z5.571.0056.0	675
ST 70.3 /16 RV	Z5.571.3056.0	675
ST 70.3 /16 RVZ	Z5.571.2056.0	675
ST 70.3 /24 REVZ	Z5.571.0356.0	675
ST 70.3 /24 RV	Z5.571.3356.0	675
ST 70.3 /24 RVZ	Z5.571.2356.0	675
ST 70.7 / 6 REV	Z5.571.5156.0	677
ST 70.7 / 6 REVZ	Z5.571.4156.0	677
ST 70.7 / 6 RV	Z5.571.8656.0	677
ST 70.7 / 6 RVZ	Z5.571.6656.0	677
ST 70.7 /10 REV	Z5.571.5256.0	677
ST 70.7 /10 REVZ	Z5.571.4256.0	677
ST 70.7 /10 RV	Z5.571.8756.0	677
ST 70.7 /10 RVZ	Z5.571.6756.0	677
ST 70.7 /16 REV	Z5.571.5056.0	677
ST 70.7 /16 REVZ	Z5.571.4056.0	677
ST 70.7 /16 RV	Z5.571.8556.0	677
ST 70.7 /16 RVZ	Z5.571.6556.0	677
ST 70.7 /24 REV	Z5.571.5356.0	677
ST 70.7 /24 REVZ	Z5.571.4356.0	677
ST 70.7 /24 RV	Z5.571.8856.0	677
ST 70.7 /24 RVZ	Z5.571.6856.0	677
ST 72,3 /10 REV	Z5.571.1756.0	679
ST 72.1 / 6 REV WL	Z5.573.0656.0	679
ST 72.1 / 6 REV WR	Z5.573.1656.0	679
ST 72.1 / 6 REV U WL	Z5.573.4656.0	679
ST 72.1 / 6 REV U WR	Z5.573.5656.0	679
ST 72.1 / 6 RV WL	Z5.573.2656.0	679
ST 72.1 / 6 RV WR	Z5.573.3656.0	679
ST 72.1 / 6 RV U WL	Z5.573.6656.0	679
ST 72.1 / 6 RV U WR	Z5.573.7656.0	679
ST 72.1 /10 REV WL	Z5.573.0756.0	679
ST 72.1 /10 REV WR	Z5.573.1756.0	679
ST 72.1 /10 REV U WL	Z5.573.4756.0	679
ST 72.1 /10 REV U WR	Z5.573.5756.0	679
ST 72.1 /10 RV WL	Z5.573.2756.0	679
ST 72.1 /10 RV WR	Z5.573.3756.0	679
ST 72.1 /10 RV U WL	Z5.573.6756.0	679
ST 72.1 /10 RV U WR	Z5.573.7756.0	679
ST 72.1 /16 REV WL	Z5.573.0556.0	679
ST 72.1 /16 REV WR	Z5.573.1556.0	679
ST 72.1 /16 REV U WL	Z5.573.4556.0	679
ST 72.1 /16 REV U WR	Z5.573.5556.0	679
ST 72.1 /16 RV WL	Z5.573.2556.0	679
ST 72.1 /16 RV WR	Z5.573.3556.0	679
ST 72.1 /16 RV U WL	Z5.573.6556.0	679
ST 72.1 /16 RV U WR	Z5.573.7556.0	679
ST 72.1 /24 REV WL	Z5.573.0856.0	679
ST 72.1 /24 REV WR	Z5.573.1856.0	679
ST 72.1 /24 REV U WL	Z5.573.4856.0	679
ST 72.1 /24 REV U WR	Z5.573.5856.0	679
ST 72.1 /24 RV WL	Z5.573.2856.0	679
ST 72.1 /24 RV WR	Z5.573.3856.0	679
ST 72.1 /24 RV U WL	Z5.573.6856.0	679
ST 72.1 /24 RV U WR	Z5.573.7856.0	679
ST 72.3 / 6 REV	Z5.571.1656.0	679
ST 72.3 / 6 REVZ	Z5.571.0656.0	679
ST 72.3 / 6 RV	Z5.571.3656.0	679
ST 72.3 / 6 RVZ	Z5.571.2656.0	679
ST 72.3 /10 REVZ	Z5.571.0756.0	679
ST 72.3 /10 RV	Z5.571.3756.0	679
ST 72.3 /10 RVZ	Z5.571.2756.0	679
ST 72.3 /16 REV	Z5.571.1556.0	679
ST 72.3 /16 REVZ	Z5.571.0556.0	679
ST 72.3 /16 RV	Z5.571.3556.0	679
ST 72.3 /16 RVZ	Z5.571.2556.0	679
ST 72.3 /24 REV	Z5.571.1856.0	679
ST 72.3 /24 REVZ	Z5.571.0856.0	679
ST 72.3 /24 RV	Z5.571.3856.0	679
ST 72.3 /24 RVZ	Z5.571.2856.0	679
ST 72.7 / 6 REV	Z5.571.5656.0	681
ST 72.7 / 6 REVZ	Z5.571.4656.0	681
ST 72.7 / 6 RV	Z5.571.9656.0	681
ST 72.7 / 6 RVZ	Z5.571.7656.0	681
ST 72.7 /10 REV	Z5.571.5756.0	681
ST 72.7 /10 REVZ	Z5.571.4756.0	681
ST 72.7 /10 RV	Z5.571.9756.0	681
ST 72.7 /10 RVZ	Z5.571.7756.0	681
ST 72.7 /16 REV	Z5.571.5556.0	681
ST 72.7 /16 REVZ	Z5.571.4556.0	681
ST 72.7 /16 RV	Z5.571.9556.0	681
ST 72.7 /16 RVZ	Z5.571.7556.0	681
ST 72.7 /24 REV	Z5.571.5856.0	681
ST 72.7 /24 REVZ	Z5.571.4856.0	681
ST 72.7 /24 RV	Z5.571.9856.0	681
ST 72.7 /24 RVZ	Z5.571.7856.0	681
ST 73.1 /40 REV WL	Z5.573.8056.0	683
ST 73.1 /40 REV WR	Z5.573.8356.0	683
ST 73.1 /40 REV U WL	Z5.573.9156.0	683
ST 73.1 /40 REV U WR	Z5.573.9356.0	683
ST 73.1 /40 RV WL	Z5.573.8656.0	683
ST 73.1 /40 RV WR	Z5.573.8956.0	683
ST 73.1 /40 RV U WL	Z5.573.9556.0	683
ST 73.1 /40 RV U WR	Z5.573.9756.0	683
ST 73.1 /64 REV WL	Z5.573.8156.0	683
ST 73.1 /64 REV WR	Z5.573.8456.0	683
ST 73.1 /64 REV U WL	Z5.573.9256.0	683
ST 73.1 /64 REV U WR	Z5.573.9456.0	683
ST 73.1 /64 RV WL	Z5.573.8756.0	683
ST 73.1 /64 RV WR	Z5.573.9056.0	683
ST 73.1 /64 RV U WL	Z5.573.9656.0	683
ST 73.1 /64 RV U WR	Z5.573.9856.0	683
ST 73.7 /40 REV	Z5.571.7056.0	683
ST 73.7 /40 REVZ	Z5.571.6056.0	683
ST 73.7 /40 RV	Z5.571.9056.0	683

contents

Type	Part no.	section / page
ST 73.7 /40 RVZ	Z5.571.8056.0	683
ST 73.7 /64 REV	Z5.571.7156.0	683
ST 73.7 /64 REVZ	Z5.571.6156.0	683
ST 73.7 /64 RV	Z5.571.9156.0	683
ST 73.7 /64 RVZ	Z5.571.8156.0	683
ST.EIG.ANL.	72.310.0653.9	767
ST.EIG.ANL.	72.310.1053.9	767
ST.EIG.ANL.	72.310.1653.9	767
ST.EIG.ANL.	72.310.2453.9	767
ST.EIG.ANL.	72.310.4853.9	767
ST.EINSATZ 3/3/6	72.213.1253.0	705
ST.EINSATZ 4/6	72.215.1053.0	699
ST.EINSATZ 6/6	72.215.1253.0	703
ST.EINSATZ 660V	70.410.0340.0	643
ST.EINSATZ 660V	70.410.0640.0	643
ST.EINSATZ 660V	70.410.1040.0	643
ST.EINSATZ 660V	70.410.1640.0	643
ST.EINSATZ 660V	70.410.2040.0	643
ST.EINSATZ 660V	70.410.2640.0	643
ST.EINSATZ 660V	70.410.3240.0	643
ST.EINSATZ VERGOL	70.311.0640.0	631
ST.EINSATZ VERGOL	70.311.1040.0	631
ST.EINSATZ VERGOL	70.311.1640.0	631
ST.EINSATZ VERGOL	70.311.2440.0	631
ST25/5 B/V0	93.031.2055.0	218
ST25/5 S/V0	93.032.2055.0	218
ST25/5 SV/V0	93.032.2455.0	218
ST28/10 B/V0	93.001.1055.0	219
ST28/10 BS/V0	93.003.1055.0	219
ST28/10 S/V0	93.002.1055.0	219
ST29/10 BC	93.101.2053.0	320
ST29/10 S/V0	93.102.0055.0	205
STECKER D-SUB 9	87.200.2205.3	560
STECKER D-SUB 15	87.200.2206.3	560
STECKER D-SUB 25	87.200.2207.3	560
STECKER D-SUB 37	87.200.2208.3	560
STECKER D-SUB 50	87.200.2209.3	560
STECKERBUCHSE	05.508.6521.0	191
STECKERBUCHSE	05.509.6021.0	176
STECKEREINSATZ	70.210.0653.0	689
STECKEREINSATZ	70.310.0640.0	631
STECKEREINSATZ	70.310.1040.0	631
STECKEREINSATZ	70.310.1640.0	631
STECKEREINSATZ	70.310.2440.0	631
STECKEREINSATZ	70.310.3253.0	631
STECKEREINSATZ	70.310.4840.0	631
STECKEREINSATZ	70.510.0653.0	631
STECKEREINSATZ	70.510.1053.0	631
STECKEREINSATZ	70.510.1653.0	631
STECKEREINSATZ	70.510.2453.0	631
STECKEREINSATZ	70.510.3253.0	631
STECKEREINSATZ	70.510.4853.0	631
STECKEREINSATZ	70.710.0658.0	631
STECKEREINSATZ	70.710.1058.0	631
STECKEREINSATZ	70.710.1658.0	631
STECKEREINSATZ	70.710.2458.0	631
STECKEREINSATZ	70.710.3253.0	631
STECKEREINSATZ	70.710.4858.0	631
STECKEREINSATZ	72.210.0653.0	693
STECKEREINSATZ	72.215.0653.0	707
STECKEREINSATZ	72.310.0653.0	655
STECKEREINSATZ	72.310.1053.0	655
STECKEREINSATZ	72.310.1653.0	655
STECKEREINSATZ	72.310.2453.0	655
STECKEREINSATZ	72.310.3253.0	655
STECKEREINSATZ	72.310.4853.0	655
STECKEREINSATZ	72.710.0658.0	655
STECKEREINSATZ	72.710.1058.0	655
STECKEREINSATZ	72.710.1658.0	655
STECKEREINSATZ	72.710.2458.0	655
STECKEREINSATZ	72.710.3258.0	655
STECKEREINSATZ	72.710.4858.0	655
STECKEREINSATZ	73.310.0353.0	713
STECKEREINSATZ	73.310.0453.0	713
STECKEREINSATZ	73.710.0753.0	713
STECKEREINSATZ	73.710.0853.0	713
STECKEREINSATZ	73.710.1553.0	719
STECKEREINSATZ	73.710.2553.0	719
STECKEREINSATZ	73.710.4058.0	719
STECKEREINSATZ	73.710.6458.0	719
STECKERKONTAKT	05.544.3129.8	739
STECKERKONTAKT	05.544.3229.8	740
STECKERKONTAKT	05.544.3329.8	740
STECKERKONTAKT	05.544.3429.8	740
STECKERKONTAKT	05.544.3529.8	740
STECKERKONTAKT	05.544.3629.8	740
STECKERKONTAKT	05.544.3729.8	740
STECKERKONTAKT	05.544.3829.8	740
STECKERKONTAKT	05.544.3929.8	740
STECKERKONTAKT	05.544.4029.8	740
STECKERKONTAKT	05.544.4129.8	740
STECKERKONTAKT	05.544.4229.8	740
STECKERKONTAKT	05.544.4329.8	740
STECKERKONTAKT	05.544.4429.8	740
STECKERKONTAKT	05.544.4529.8	740
STECKERKONTAKT	05.544.4629.7	740
STECKERKONTAKT	05.544.4729.7	740
STECKERKONTAKT	05.544.5621.0	761
STECKERLEISTE	Z5.533.8221.0	357
STECKERTEIL	75.012.5053.0	758
STECKERTEIL	99.701.6905.5	760
STVB. KOMPLETT	99.700.0000.6	672
STVB. KOMPLETT	99.701.0000.6	672
STVB. KOMPLETT	99.702.0000.6	672
STVB. KOMPLETT	99.703.0000.6	672
STVB. KOMPLETT	99.706.0000.6	672
STVB. KOMPLETT	99.707.0000.6	672

Type	Part no.	section / page
STVB. KOMPLETT	99.708.0000.6	672
STVB. KOMPLETT	99.709.0000.6	672
STVB. KOMPLETT	99.718.0000.6	672
STVB. KOMPLETT	99.719.0000.6	672
STVB. KOMPLETT	99.720.0000.6	672
STVB. KOMPLETT	99.721.0000.6	672
STVB. KOMPLETT	99.725.0000.6	672
STVB. KOMPLETT	99.726.0000.6	672
STVB. KOMPLETT	99.727.0000.6	672
TE / RFK 1 / 95 PA/V0	07.340.0353.0	156
TE/RFK 1/150-240 PA/V0	07.340.1053.0	157
TMS-101-250V5A	87.110.6253.0	539
TR.-STUECK F.TS35	Z5.595.2153.0	584
TR.STUECK M. U-F	05.583.0053.0	584
TR.STUECK M. U-F	05.583.0053.0	675
TR.STUECK M. U-F	05.583.0153.0	586
TR.STUECK M. U-F	05.584.8853.0	590
TR.STUECK M. U-F	05.584.8953.0	590
TRAGBOCK	Z1.990.2030.0	215
TRAGSCHIENE 2M	98.310.0000.0	215
TRENNSTUECK	05.592.1953.0	215
TRENNWAND M.BEZ.	07.340.1153.0	152
TRENNWAND M.BEZ.	07.340.1353.0	152
TS 2,5 GELB	07.311.2053.8	312
TS 2,5 GELB	07.311.2053.8	101
TS 4 GELB	07.311.2153.8	78
TS 4 / 15 GELB	07.311.2953.8	112
TS 6 GELB	07.311.2253.8	103
TS 10 GELB	07.311.2353.8	78
TS 16 GELB	07.311.2453.8	69
TS M3 S35	69.335.0253.0	219
TS M4 / M6-32	69.332.0000.0	219
TS M4 S35	69.335.0453.0	219
TS M5 S35	69.335.0553.0	219
TS M6 S35	69.335.0653.0	219
TSI 35 GELB	07.311.8653.8	79
TSM 2,5 / 15 GELB	07.311.2853.8	144
TSN AD 16 GELB	07.311.8553.8	104
TSN16 GELB	07.311.8453.8	104
TUSCHESTIFT 0.25	95.502.0125.0	49
TUSCHESTIFT 0.35	95.502.0135.0	49
TW 2,5 - 4 /15 BLAU	07.311.1853.6	145
TW 2,5 - 4 /V0	07.311.1155.0	78
TW 2,5 - 4 BL/V0	07.311.1155.6	78
TW 4 TK... /V0	07.311.8155.0	122
TW 6 BL/V0	07.311.1255.6	103
TW 1 - 2,5	07.312.5153.0	232
TW 1 - 2,5	07.312.5153.6	232
TW 2,5-3 D/U /V0	07.312.1255.0	118
TW 2,5-4 K/U /V0	07.312.0555.0	118
TW 2,5-4 KO/V0	07.310.9455.0	120
TW 4 E /V0	07.311.5055.0	114
TW 6 /V0	07.311.1255.0	103
TWC 1 - 2,5 D1.	07.312.5353.0	234
TWC 1 - 2,5 D1. BLAU	07.312.5353.6	234
TWC 1 - 2,5 D2./ E	07.312.5553.0	231
TWC 1 - 2,5 D2./ E BLAU	07.312.5553.6	236
TWF 1,5 E	07.312.3653.0	33
TWF 2,5 - 4	07.312.2253.0	19
TWF 2,5 - 4 BLAU	07.312.2253.6	20
TWF 2,5/D 1/2	07.312.2453.0	26
TWF 2,5/D 1/2 BLAU	07.312.2453.6	26
TWF 2,5/D 2/2	07.312.2653.0	26
TWF 2,5/D 2/2 BLAU	07.312.2653.6	26
TWF 4 E	07.312.5853.0	30
TWF 4/D1/2	07.312.4953.0	27
TWF 4/D1/2 BLAU	07.312.4953.6	27
TWI 4/V0	07.311.6955.0	72
TWM 2,5 - 4 /15	07.311.1853.0	145
TWN 10 /V0	07.311.7655.0	103
TWN 10 BL/V0	07.311.7655.6	103
TWN 16 /V0	07.311.7755.0	104
TWN 16 BL/V0	07.311.7755.6	104
TWN 35 /V0	07.311.7855.0	105
TWN 35 BL /V0	07.311.7855.6	105
TWN 70 /V0	07.311.7955.0	105
TWN 70 BL /V0	07.311.7955.6	105
TWN2,5E	07.312.1855.0	116
UEBERGABE UNIVERSAL-S5	87.221.6353.0	563
UEBERGABE UNIVERSAL-S5	87.222.6353.0	565
UET +- 10 V	57.802.1053.0	506
UET-P +- 10 V	57.802.1153.0	507
UET-P +- 20 MA	57.802.1353.0	507
UET-P +- 199MV	57.802.1453.0	507
UET-P/LCD +-10 V	57.802.2153.0	507
UET-P/LCD +-20MA	57.802.2353.0	507
UET/LCD +- 10 V	57.802.2053.0	506
UET/LCD +- 20 MA	57.802.2253.0	506
UNTERLEGPLATTE	07.470.1380.0	258
UNTERLEGPLATTE	07.471.1380.0	259
UNTERLEGPLATTE	07.472.1380.0	259
UNTERLEGPLATTE	07.473.1380.0	259
UNTERTEIL	75.013.5051.0	758
VB 16 E / M	07.256.8027.0	259
VB 16 E / 2 POLIG	07.256.8227.0	259
VB 0,5 WK 4..- 2	07.255.0227.0	168
VB 0,5 WK 4..- 3	07.255.0327.0	168
VB 0,5 WK 4..- 4	07.255.0427.0	168
VB 0,5 WK 4..- 5	07.255.0527.0	168
VB 0,5 WK 4..- 6	07.255.0627.0	168
VB 0,5 WK 4..- 7	07.255.0727.0	168
VB 0,5 WK 4..- 8	07.255.0827.0	168
VB 0,5 WK 4..- 9	07.255.0927.0	168
VB 0,5 WK 4..- M-70	07.255.0027.0	168
VB 0,5 WK 4..-10	07.255.1027.0	168
VB 0,5 WK 4..-11	07.255.1127.0	168
VB 0,5 WK 4..-12	07.255.1227.0	168

Type	Part no.	section / page
VB 1 WK 4..- 2	07.255.4227.0	168
VB 1 WK 4..- 3	07.255.4327.0	168
VB 1 WK 4..- 4	07.255.4427.0	168
VB 1 WK 4..- 5	07.255.4527.0	168
VB 1 WK 4..- 6	07.255.4627.0	168
VB 1 WK 4..- 7	07.255.4727.0	168
VB 1 WK 4..- 8	07.255.4827.0	168
VB 1 WK 4..- 9	07.255.4927.0	168
VB 1 WK 4..- M-70	07.255.4027.0	168
VB 1 WK 4..-10	07.255.5027.0	168
VB 1 WK 4..-11	07.255.5127.0	168
VB 1 WK 4..-12	07.255.5227.0	168
VB 11 / 1 / 12	07.250.1027.0	258
VB 11/ 1 / 2	07.250.0227.0	258
VB 11/ 1 / 6	07.250.0627.0	258
VB 11/ 2	07.250.2527.0	218
VB 9786 2	07.253.0227.0	130
VB 9786 3	07.253.0327.0	130
VB 9786 6	07.253.0627.0	130
VB 9786 4	07.253.0427.0	168
VB 9786 M	07.253.0027.0	259
VB RFK 1 / 95 / 2 / 32	07.205.1227.0	153
VB RFK 1 / 95 / 3 / 32	07.205.1327.0	153
VB RFK 1 / 95 / 4 / 32	07.205.1427.0	153
VB RFK 1 185 2	07.201.4227.0	157
VB RFK 1 185 3	07.201.4327.0	157
VB RFK 1 185 4	07.201.4427.0	157
VB RFK 1 240 2	07.201.8227.0	159
VB RFK 1 240 3	07.201.8327.0	159
VB RFK 1 240 4	07.201.8427.0	159
VB WK 4 - 2	Z7.281.0227.0	87
VB WK 4 - 3	Z7.281.0327.0	87
VB WK 4 - 4	Z7.281.0427.0	87
VB WK 4 - 5	Z7.281.0527.0	87
VB WK 4 - 6	Z7.281.0627.0	87
VB WK 4 M-70	Z7.281.0027.0	87
VB WK 4/D..-2	Z7.281.6227.0	164
VB WK 4/D..-3	Z7.281.6327.0	164
VB WK 4/D..-4	Z7.281.6427.0	164
VB WK 4/D..-5	Z7.281.6527.0	164
VB WK 4/D..-6	Z7.281.6627.0	164
VB WK 4/D..M-70	Z7.281.6027.0	164
VB WK 10 / SI - 2	Z7.287.0227.0	125
VB WK 10 / SI - 3	Z7.287.0327.0	125
VB WK 10 / SI - 4	Z7.287.0427.0	165
VB WK 10 / SI - 5	Z7.287.0527.0	165
VB WK 10 / SI - 6	Z7.287.0627.0	125
VB WK 10 / SI M-30	Z7.287.0027.0	165
VB WK 2,5 - 2	Z7.280.0227.0	120
VB WK 2,5 - 3	Z7.280.0327.0	120
VB WK 2,5 - 4	Z7.280.0427.0	164
VB WK 2,5 - 5	Z7.280.0527.0	164
VB WK 2,5 - 6	Z7.280.0627.0	120
VB WK 2,5 M-80	Z7.280.0027.0	164
VB WK 4E - 11	07.255.3127.0	168
VB WK 6 - 2	Z7.282.0227.0	165
VB WK 6 - 3	Z7.282.0327.0	165
VB WK 6 - 4	Z7.282.0427.0	165
VB WK 6 - 5	Z7.282.0527.0	165
VB WK 6 - 6	Z7.282.0627.0	165
VB WK 6 M-40	Z7.282.0027.0	165
VB WK/..S/IW/U- 2	Z7.281.3227.0	140
VB WK/..S/IW/U- 3	Z7.281.3327.0	140
VB WK/..S/IW/U- 4	Z7.281.3427.0	164
VB WK/..S/IW/U- 5	Z7.281.3527.0	164
VB WK/..S/IW/U- 6	Z7.281.3627.0	140
VB WK/..S/IW/U-20	Z7.281.3027.0	164
VB WK2,5 KO - 2	07.257.0227.0	120
VB WK2,5 KO - 3	07.257.0327.0	120
VB WK2,5 KO - 20	07.257.2027.0	120
VB WK4 E - 7	07.255.2727.0	168
VB WK4 E - 8	07.255.2827.0	168
VB WK4 E - 9	07.255.2927.0	168
VB WK4 E - 10	07.255.3027.0	168
VB WK4 E - 12	07.255.3227.0	168
VB WK4 E - 2	07.255.2227.0	168
VB WK4 E - 3	07.255.2327.0	168
VB WK4 E - 4	07.255.2427.0	168
VB WK4 E - 5	07.255.2527.0	168
VB WK4 E - 6	07.255.2627.0	168
VB WK4 E M	07.255.2027.0	168
VB WKI 10 - 2	Z7.288.0227.0	87
VB WKI 10 - 3	Z7.288.0327.0	87
VB WKI 10 - 4	Z7.288.0427.0	87
VB WKI 10 - 5	Z7.288.0527.0	87
VB WKI 10 - 6	Z7.288.0627.0	87
VB WKI 10 M-40	Z7.288.0027.0	87
VB WKI 16 - 2	Z7.289.0227.0	87
VB WKI 16 - 3	Z7.289.0327.0	69
VB WKI 16 - 4	Z7.289.0427.0	87
VB WKI 16 - 5	Z7.289.0527.0	87
VB WKI 16 - 6	Z7.289.0627.0	87
VB WKI 16 M-20	Z7.289.0027.0	87
VB WKM 2,5 / 15 - 2	Z7.215.4227.0	164
VB WKM 2,5 / 15 - 3	Z7.215.4327.0	164
VB WKM 2,5 / 15 - 4	Z7.215.4427.0	164
VB WKM 2,5 / 15 - 5	Z7.215.4527.0	164
VB WKM 2,5 / 15 - 6	Z7.215.4627.0	164
VB WKM 2,5 / 15 M-60	Z7.215.4027.0	164
VB WKN70 - 2	Z7.286.3227.0	165
VB WKN70 - 3	Z7.286.3327.0	165
VB WKN70 - 4	Z7.286.3427.0	165
VB WKN70 - 5	Z7.286.3527.0	165
VB WKN70 - 6	Z7.286.3627.0	165
VBK6.2 BLAU	Z8.000.0202.4	442
VBK6.2 ROT	Z8.000.0202.3	442
VBRM3.3	Z8.000.0200.8	442

contents of
type description

contents TYPE

Type	Part no.	section / page
VBS WK4 E - 2	07.256.4227.0	168
VBS WK4 E - 3	07.256.4327.0	168
VBS WK4 E - 4	07.256.4427.0	168
VBS WK4 E - 5	07.256.4527.0	168
VBS WK4 E - 6	07.256.4627.0	168
VBS WK4 E - 7	07.256.4727.0	168
VBS WK4 E - 8	07.256.4827.0	168
VBS WK4 E - 9	07.256.4927.0	168
VBS WK4 E - 10	07.256.5027.0	168
VBS WK4 E - 11	07.256.5127.0	168
VBS WK4 E - 12	07.256.5227.0	168
VBWKN 10 - 2	Z7.283.6227.0	165
VBWKN 10 - 3	Z7.283.6327.0	165
VBWKN 10 - 4	Z7.283.6427.0	165
VBWKN 10 - 5	Z7.283.6527.0	165
VBWKN 10 - 6	Z7.283.6627.0	165
VBWKN 10 - M-40	Z7.283.6027.0	165
VBWKN150 - 2	Z7.287.1227.0	165
VBWKN150 - 3	Z7.287.1327.0	165
VERB.-SCHIENE	05.561.4125.0	310
VERB.-SCHIENE	05.561.4125.0	134
VERBINDUNGSKAMM	07.250.3027.0	128
VERBINDUNGSKAMM #	07.250.1627.0	256
VERBINDUNGSKAMM #	07.250.3127.0	128
VM WKF K0..18	69.700.1853.0	45
VM WKF K0..9	69.700.0953.0	45
W.NR.07060796 6E SONDER	99.272.3521.9	258
WAK16/1	30.494.1010.0	216
WAK16/1 BL	30.494.1010.6	216
WAK16/1 GN	30.494.1010.7	216
WAK16/2 BL/V0	30.494.3021.6	24
WAK25/3	30.494.1110.0	216
WAK25/3 BL	30.494.1110.6	193
WAK25/3 GN	30.494.1110.7	216
WAK35/2 BL/V0	30.494.4021.6	107
WAK35/2 BLANK	30.494.4121.0	24
WAK35/3	30.494.2510.0	216
WAK35/3 BL	30.494.2510.6	193
WAK35/3 GN	30.494.2510.7	216
WAK4/1	30.494.0010.0	216
WAK4/1 BL	30.494.0010.6	216
WAK4/1 GN	30.494.0010.7	216
WAK4/3	30.494.0110.0	216
WAK4/3 BL	30.494.0110.6	216
WAK4/3 GN	30.494.0110.7	216
WE 1/U	Z5.523.5753.0	101
WE 1/U	Z5.523.5753.0	584
WE 2/U	Z5.523.5653.0	105
WE SH 1/35	Z5.515.3310.0	212
WE SH 2/35	Z5.515.3410.0	212
WEB1001 LEERG B3	87.030.0053.0	585
WEB1001 LEERG.B1	86.010.0053.0	584
WEB1001 LEERG.B1	87.010.0053.0	584
WEB1001 LEERG.B2	86.020.0053.0	584
WEB1001 LEERG.B2	87.020.0053.0	584
WEB1001 LEERG.B3	86.030.0053.0	585
WEB1001 LEERG.B4	86.040.0053.0	585
WEB1001 LEERG.B4	87.040.0053.0	585
WEB1001 LEERG.B6	87.060.0053.0	586
WEB1001 LEERG.B7	87.070.0053.0	586
WEB1001 LEERG.B8	87.080.0053.0	587
WEB1001 LEERG.B9	87.090.0053.0	587
WEF 1 BS/35	69.920.1053.0	47
WEF 1/35	Z5.523.9353.0	20
WEF 1/35	Z5.523.9353.0	308
WEG LEERG. F. 4A	57.801.0053.0	592
WEG LEERG. F. 4A	57.801.5053.0	592
WEG LEERG. F. 6A	57.801.5153.0	593
WEG LEERG. F. 8A	57.801.5253.0	593
WIEBOX CN 19 DK	07.416.5353.0	594
WIEBOX CN 19 DU	07.416.5453.0	594
WIEBOX CN 19 EP	07.416.4553.0	594
WIEBOX CN 19 FK	07.416.4853.0	594
WIEBOX CN 19 FKG	07.416.4856.0	594
WIEBOX CN 19 GK	Z1.296.3553.0	594
WIEBOX CN 19 GKL	Z1.296.3453.0	594
WIEBOX CN 22 DK	07.416.5653.0	594
WIEBOX CN 22 DU	07.416.5753.0	594
WIEBOX CN 22 EP	07.416.4653.0	594
WIEBOX CN 22 FK	07.416.4953.0	594
WIEBOX CN 22 FKG	07.416.4956.0	594
WIEBOX CN 22 GK	Z1.296.3953.0	594
WIEBOX CN 22 GKL	Z1.296.3853.0	594
WIEBOX CN 26 DK	07.416.5853.0	595
WIEBOX CN 26 DU	07.416.5953.0	595
WIEBOX CN 26 EP	07.416.4753.0	595
WIEBOX CN 26 FK	07.416.5053.0	595
WIEBOX CN 26 FKG	07.416.5056.0	595
WIEBOX CN 26 GK	Z1.296.4353.0	595
WIEBOX CN 26 GKL	Z1.296.4253.0	595
WIEBOX CN BL1	05.561.9553.0	594
WIEBOX CN BL2	05.561.9653.0	594
WIEBOX CN BZ	04.244.1853.0	502
WIEBOX CN DK	07.416.5153.0	594
WIEBOX CN DU	07.416.5253.0	594
WINKEL LINKS	05.523.1710.0	204
WINKEL RECHTS	05.523.1610.0	204
WIPOS 24VDC/10A 1PH H	81.000.6041.0	520
WIPOS 24VDC/10A 1PH V	81.000.6040.0	519
WIPOS 24VDC/2,0A 1PH V	81.000.6010.0	518
WIPOS 24VDC/20A 1PH H	81.000.6051.0	521
WIPOS 24VDC/20A 1PH V	81.000.6050.0	519
WIPOS 24VDC/20A 3PH H	81.000.6053.0	522
WIPOS 24VDC/40A 3PH H	81.000.6063.0	522
WIPOS 24VDC/5,0A 1PH H	81.000.6031.0	520
WIPOS 24VDC/5,0A 1PH V	81.000.6030.0	518
WK / 3-6S / IW / U/V0	57.504.6755.0	140
WK / 3-6S / U/V0	57.504.6655.0	140
WK / 4-8S / IW / U/V0	57.504.6355.0	141
WK / 4-8S / U/V0	57.504.6255.0	141
WK / 5-10S / U/V0	57.504.3655.0	139
WK 2,5 / U /V0	57.503.0055.0	101
WK 2,5 / U BL / V0	57.503.0055.6	102
WK 4 / 3-6S KO/U/V0	57.504.7355.0	141
WK 4 / D 1/2 U/V0 BLAU	57.504.5055.6	112
WK 4 / THSI5 U/V0	57.904.5355.0	124
WK 4 / U /V0	57.504.0055.0	69
WK 4 / U BL / V0	57.504.0055.6	69
WK 4 / U F1/V0	57.504.1055.0	142
WK 4 / U F2/V0	57.504.1155.0	142
WK 4 3-6 S 1K / U / V0	57.504.3755.0	138
WK 4 3-6 S 1K/IW/U/V0	57.504.2755.0	139
WK 4 5S2,8 1K / U/V0	57.504.3855.0	138
WK 4 5S2,8 1K/IW/U/V0	57.504.2855.0	139
WK 4 E / U G-ULR/V0	57.404.8055.9	115
WK 4 E / U G-URL/V0	57.404.8355.5	115
WK 4 E / U G2/1/V0	57.404.8855.9	115
WK 4 E / U G2/V0	57.404.7955.5	115
WK 4 E / U G0/V0	57.404.8255.5	115
WK 4 E / U GU/V0	57.404.8155.9	115
WK 4 E / U LD 42V/V0	57.404.8455.5	115
WK 4 SL / U /V0	57.504.9055.0	69
WK 4 TKG-TRST / U/V0	57.504.4555.0	123
WK 4 TKG-TRST P3/ U/V0	57.504.4855.0	123
WK 4 TKS D / U V0	57.504.4455.0	123
WK 6 / U /V0	57.506.0055.0	101
WK 6 / U BL / V0	57.506.0055.6	101
WK 6 SL / U /V0	57.506.9055.0	101
WK 10/SI U 5 X 20 /V0	57.910.5055.0	101
WK 10/SI U 5 X 25 /V0	57.910.5155.0	125
WK 10/SI U 5 X 30 /V0	57.910.5255.0	125
WK 10/SI U 5X20M.GLB/V0	57.910.5855.0	125
WK 10/SI U 5X20M.NGL/V0	57.910.5455.0	125
WK 10/SI U 6,3 X 32 /V0	57.910.5355.0	125
WK 10/SI U D/V0	57.910.4955.0	125
WK 10/SIU6,3X32M.GLB/V0	57.910.6155.0	125
WK 10/SIU6,3X32M.NGL/V0	57.910.5755.0	125
WK 2,5 U /8113 S-VS	05.576.5853.0	311
WK 2,5 U /8113 S-VS	05.576.5853.0	137
WK 2,5-3 D SL /V0	56.503.8355.0	119
WK 2,5-3 D SL-NGN /V0	56.503.8455.0	119
WK 2,5-3 D SL-PGN /V0	56.503.8555.0	119
WK 2,5-3 D/U /V0	57.503.8855.0	118
WK 2,5-3 D/U-NGN /V0	57.503.8955.0	118
WK 2,5-3 D/U-PGN /V0	57.503.9055.0	118
WK 2,5-4 KI SL /V0	56.503.7355.0	119
WK 2,5-4 KI SL-NGN /V0	56.503.7455.0	119
WK 2,5-4 KI SL-PGN /V0	56.503.7555.0	119
WK 2,5-4 KI SL-PRT /V0	56.503.7655.0	119
WK 2,5-4 KI/U /V0	57.503.7855.0	118
WK 2,5-4 KI/U-NGN /V0	57.503.7955.0	118
WK 2,5-4 KOI /U /V0	57.503.7055.0	120
WK 2,5-4 KOI /U-NGN /V0	57.503.7155.0	120
WK 2,5-4 KOI /U-PGN /V0	57.503.7255.0	121
WK 2,5U/8113S/H/V0	57.503.2055.0	137
WK 2,5U/8113S/H/V0	57.503.2055.0	311
WK 4 E/U LD +P O 24/V0	57.404.7255.5	115
WK 4 E/U LD -P O 24/V0	57.404.7455.9	115
WK 4 E/U LDG +P O 24/V0	57.404.8755.5	115
WK 4 E/U LED+PO 24LD/V0	57.404.6255.9	115
WK 4 SI-D/U 5 X20/V0	57.504.1755.0	126
WK 4 SI-D/U 5 X25/V0	57.504.1655.0	126
WK 4 TKG/U /V0	57.504.4055.0	101
WK 4 TKM P3/U /V0	57.504.2355.0	123
WK 4 TKM/U /V0	57.504.2055.0	101
WK 4 TKM/U BL /V0	57.504.2055.6	123
WK 4/D E U/V0	57.504.5255.0	113
WK 4/D1/2U/V0	57.504.5055.0	112
WK 4/D2/2SLU /V0	57.504.9155.0	113
WK 4/D2/2U BL/V0	57.504.5155.6	112
WK 4/D2/2U/V0	57.504.5155.0	112
WK 4/THSI 5 GL 250U /V0	57.904.5755.0	124
WK 4/THSI 5 GL 500U /V0	57.904.5855.0	124
WK 4/THSI 5 LED 12U /V0	57.904.5455.0	124
WK 4/THSI 5 LED 24U /V0	57.904.5555.0	124
WK 4/THSI 5 LED 60U /V0	57.904.5655.0	124
WK 4/THSI6,3 GL 250U/V0	57.904.6755.0	124
WK 4/THSI6,3 GL 500U/V0	57.904.6855.0	124
WK 4/THSI6,3 LED 12U/V0	57.904.6455.0	124
WK 4/THSI6,3 LED 24U/V0	57.904.6555.0	124
WK 4/THSI6,3 LED 60U/V0	57.904.6655.0	124
WK 4/THSI6,3 U /V0	57.904.6355.0	124
WK 4E SL/U /V0	57.504.9255.0	115
WK 4E/U /V0	57.404.7055.0	114
WK 4E/UVB SW/V0	57.404.6955.1	114
WK2,5-4 KI/U-PGN /V0	57.503.8055.0	118
WK2,5U / 8113S/V... /V0	57.503.2655.0	136
WK2,5U/8113S/V/LED25/V0	57.503.2755.0	310
WK2,5U/8113S/V/LED25/V0	57.503.2755.0	136
WK2,5U/8113S/V/LED50/V0	57.503.2855.0	137
WK2,5U/8113S/V/LED50/V0	57.503.2855.0	311
WK2,5U/8113S/V/VK/V0	57.503.3055.6	137
WK2,5U/8113S/V/VK/V0	57.503.3055.6	311
WK2,5U/D/8113S/V.../V0	57.503.2155.0	134
WK2,5U/D/8113S/V.../V0	57.503.2155.0	312
WK2,5U/D/8113S/V/LD25V0	57.503.2255.0	312
WK2,5U/D/8113S/V/LD25V0	57.503.2255.0	134
WK2,5U/D/8113S/V/LD50V0	57.503.2355.0	135
WK2,5U/D/8113S/V/LD50V0	57.503.2355.0	313
WK2,5U/D/8113S/V/VK/V0	57.503.2555.6	313
WK2,5U/D/8113S/V/VK/V0	57.503.2555.6	135
WKB 2,5 / B / U/V0	57.603.3555.0	205
WKB 2,5 / U/V0	57.603.0055.0	204
WKC 1 /35	56.301.0053.0	231
WKC 1 /35 BLAU	56.301.0053.6	231
WKC 1 /D2/2/SL/35	56.301.9153.0	237
WKC 1 D1/2/35	56.301.5053.0	231
WKC 1 D1/2/35 BLAU	56.301.5053.6	234
WKC 1 D1/2/SL/35	56.301.9353.0	235
WKC 1 D2/2/35	56.301.5153.0	231
WKC 1 D2/2/35 BLAU	56.301.5153.6	236
WKC 1 E/35	56.301.7053.0	231
WKC 1 SL/35	56.301.9053.0	231
WKC 1 TKG/35	56.301.4053.0	231
WKC 1 TKM/35	56.301.2053.0	231
WKC 1 TKM/35 BLAU	56.301.2053.6	240
WKC 2,5 /35	56.303.0053.0	231
WKC 2,5 /35 BLAU	56.303.0053.6	231
WKC 2,5 D1/2/35	56.303.5053.0	231
WKC 2,5 D1/2/35 BLAU	56.303.5053.6	234
WKC 2,5 D1/2/SL/35	56.303.9353.0	235
WKC 2,5 D2/2/35	56.303.5153.0	231
WKC 2,5 D2/2/35 BLAU	56.303.5153.6	236
WKC 2,5 D2/2/SL/35	56.303.9153.0	231
WKC 2,5 E/35	56.303.7053.0	231
WKC 2,5 E/35 G-URL	56.303.8353.5	239
WKC 2,5 E/35 G2	56.303.7953.5	239
WKC 2,5 E/35 GO	56.303.8253.5	239
WKC 2,5 E/35 ORANGE	56.303.7553.9	239
WKC 2,5 E/35 ROT	56.303.7553.5	239
WKC 2,5 E/35/1D/2G ROT	56.303.7153.5	239
WKC 2,5 SL/35	56.303.9053.0	231
WKC 2,5 TKG/35	56.303.4053.0	231
WKC 2,5 TKM/35	56.303.2053.0	231
WKC 2,5 TKM/35 BLAU	56.303.2053.6	240
WKC2,5E/35/1D/2G ORANGE	56.303.7153.9	239
WKF 1,5 E / 35	56.702.7053.0	33
WKF 1,5E/8113/35	07.312.4753.0	37
WKF 1,5E/8113/35	07.312.4753.0	309
WKF 1,5E/8113/35	56.702.2053.0	37
WKF 1,5E/8113/35	56.702.2053.0	309
WKF 1.5 KOA 2L/SL	37.702.7653.0	45
WKF 1.5 KOA 2L/SL-PGE	37.702.8653.0	45
WKF 1.5 KOE	37.702.7753.0	45
WKF 1.5 KOE-PGN	37.702.8753.0	45
WKF 1.5 KOI 3L	37.702.7453.0	44
WKF 1.5 KOI 3L-PGE	37.702.8453.0	44
WKF 1.5 KOI 3L/SL	37.702.7553.0	44
WKF 1.5 KOI 3L/SL-PGE	37.702.8553.0	44
WKF 10/35	56.710.0053.0	21
WKF 10/35 BLAU	56.710.0053.6	21
WKF 10SL/35	56.710.9053.0	23
WKF 16/35	56.716.0053.0	21
WKF 16/35 BLAU	56.716.0053.6	21
WKF 16SL/35	56.716.9053.0	23
WKF 2,5 / 35	56.703.0053.0	19
WKF 2,5 / 35 BLAU	56.703.0053.6	19
WKF 2,5 / D / D / 35	56.703.5253.0	27
WKF 2,5 / D 1/2 /SL/35	56.703.9353.0	28
WKF 2,5 / D 2/2 / SL/35	56.703.9153.0	19
WKF 2,5 / D2/SL35/8113	56.703.9253.0	36
WKF 2,5 / D2/SL35/8113	56.703.9253.0	308
WKF 2,5 SL / 35	56.703.9053.0	19
WKF 2,5/D1/2/35	56.703.5053.0	19
WKF 2,5/D1/2/35 BLAU	56.703.5053.6	19
WKF 2,5/D2 35/8113	56.703.2053.0	308
WKF 2,5/D2 35/8113	56.703.2053.0	36
WKF 2,5/D2/ 35/8113 BL	56.703.2053.6	308
WKF 2,5/D2/ 35/8113 BL	56.703.2053.6	36
WKF 2,5/D2/2/35	56.703.5153.0	19
WKF 2,5/D2/2/35 BLAU	56.703.5153.6	19
WKF 4 E/35	56.704.7053.0	30
WKF 4 / 35	56.704.0053.0	19
WKF 4 / 35 BLAU	56.704.0053.6	19
WKF 4 E/SL/35	56.704.9253.0	31
WKF 4 NT / 35	56.704.8153.0	24
WKF 4 SL / 35/V0	56.704.9053.0	19
WKF 4 TKG / 35	56.704.4053.0	38
WKF 4 TKM / 35	56.704.2053.0	39
WKF 4/D1/2/35	56.704.5053.0	27
WKF 4/D1/2/35 BLAU	56.704.5053.6	27
WKF 4/D1/2/SL/35	56.704.9353.0	29
WKF 6/35	56.706.0053.0	21
WKF 6/35 BLAU	56.706.0053.6	21
WKF 6SL/35	56.706.9053.0	23
WKI 10 / U BLAU/V0	57.510.1155.6	78
WKI 10 / U/V0	57.510.1155.0	78
WKI 10 ETK/U/V0	57.510.8255.0	80
WKI 10 PEN/35/V0	56.510.9455.0	84
WKI 10 SL / 35/V0	56.510.9255.0	82
WKI 16 / U BLAU/V0	57.516.1155.6	69
WKI 16 / U/V0	57.516.1155.0	69
WKI 16 ETK/U/V0	57.516.8255.0	69
WKI 16 PEN/35/V0	56.516.9455.0	84
WKI 16 SL / 35/V0	56.516.9255.0	69
WKI 35 / U BLAU/V0	57.535.1155.6	79
WKI 35 / U/V0	57.535.1155.0	79
WKI 35 PEN/35/V0	56.535.9455.0	85
WKI 35 SL / 35/V0	56.535.9255.0	83
WKI 4 D-D /V0	56.404.9755.0	69
WKI 4 D-D-SL /V0	56.404.9855.0	69
WKI 4 DU /V0	56.404.9655.0	72
WKI 4 N-D-SL /V0	56.404.9455.0	69
WKI 4 NT -D-SL GL/V0	56.404.9255.0	73
WKI 4 NT -D-SL /V0	56.404.9555.0	69
WKI 4 NTN-D-SL /V0	56.404.9155.0	74
WKI 4 TKG-D-SL /V0	56.404.8855.0	74
WKI SH/U /V0	01.108.3255.0	69
WKIF 16 NT/35	56.716.8153.0	25
WKIF 16 SL/35	56.716.9153.0	25
WKIF 16/35 BLAU	56.716.1153.6	25

contents

Type	Part no.	section / page
WKIF 16/35 GRAU	56.716.1153.0	25
WKIF 2,5 D	56.703.9653.0	58
WKIF 2,5 D-D	56.703.9753.0	55
WKIF 2,5 D-D-SL	56.703.9853.0	55
WKIF 2,5 N-D-SL	56.703.9453.0	55
WKIF 2,5 NT-D-SL	56.703.9553.0	55
WKIF/SH/35	01.108.7653.0	55
WKM 2,5 / 15 BLAU/V0	55.503.1053.6	145
WKM 2,5 / 15/V0	55.503.1053.0	145
WKM 2,5 F1 / 15/V0	55.503.1253.0	144
WKM 2,5 F2 / 15/V0	55.503.1353.0	144
WKM 4 / 15/V0	55.504.1053.0	145
WKM 4 SL / 15/V0	55.504.9153.0	145
WKM 4 / 15 BLAU/V0	55.504.1053.6	145
WKN 4ETK/U/V0	57.504.8155.0	69
WKN 10/U /V0	57.510.0155.0	101
WKN 10ETK/U/V0	57.510.8155.0	106
WKN 16ETK/U/V0	57.516.8155.0	107
WKN 70 SL/U	57.570.9055.0	110
WKN10 / U BL / V0	57.510.0155.6	101
WKN10 SL/U /V0	57.510.9055.0	101
WKN150 / U /V0	57.597.0155.0	105
WKN150/ U BL / V0	57.597.0155.6	105
WKN16 / U /V0	57.516.0155.0	104
WKN16 / U BL / V0	57.516.0155.6	104
WKN16 SL/U /V0	57.516.9055.0	109
WKN2,5E / U V0	57.403.7055.0	116
WKN2,5E / U VB SW/V0	57.403.6955.1	116
WKN35 / U /V0	57.535.0155.0	101
WKN35 / U BL / V0	57.535.0155.6	101
WKN35 SL/U / V0	57.535.9055.0	101
WKN70 / U /V0	57.570.0155.0	105
WKN70 / U BL / V0	57.570.0155.6	105
WPS-115/230-24V1A	81.000.3010.0	524
WPS-T115/230-60VA	87.230.1553.0	525
WR1-230-1W-250V4A	80.010.0011.0	456
WR1-DUO-2W-250V5A	80.010.1100.0	458
WR4-115-1W-250V4A	80.010.1102.0	456
WR4-115-2W-250V4A	80.010.1104.0	458
WR4-230-1W-250V4A	80.010.1106.0	457
WR4-230-2W-250V4A	80.010.1108.0	459
WR8-115-1W-250V4A	80.010.1110.0	456
WR8-115-2W-250V4A	80.010.1112.0	458
WR8-230-1W-250V4A	80.010.1114.0	457
WR8-230-2W-250V4A	80.010.1116.0	459
WRS-REL-1S-250V5A	80.010.0005.0	460
WRS-REL-1S-48V20M	80.010.0007.0	460
WRS-REL-1W-250V16	80.010.0010.0	461
WRS-REL-1W-250V5A	80.010.0008.0	460
WRS-REL-1W-48V20M	80.010.0009.0	460
WRS-REL-2W-250V5A	80.010.1003.0	461
WRS-REL-2W-48V20M	80.010.1002.0	461
WRS-SSAC1-250V4A	80.020.2001.0	481
WRS-SSAC1-250V6A	80.020.0004.0	481
WRS-SSDC-60V3A	80.020.2003.0	480
WRS-SSDC-60V5A	80.020.2004.0	480
WRS-T115/230-300M	81.000.3000.0	524
WRS-TIMER-250V5A	81.020.3000.0	463
X L= 1000 MIT SCHIRM	08.000.0106.0	569
X L= 1000 OHNE SCHIRM	08.000.0107.4	569
X L= 1500 MIT SCHIRM	08.000.0106.1	569
X L= 1500 OHNE SCHIRM	08.000.0107.5	569
X L= 2000 MIT SCHIRM	08.000.0106.2	569
X L= 2000 OHNE SCHIRM	08.000.0107.6	569
X L= 2500 MIT SCHIRM	08.000.0106.3	569
X L= 2500 OHNE SCHIRM	08.000.0107.7	569
X L= 3000 MIT SCHIRM	08.000.0106.4	569
X L= 3000 OHNE SCHIRM	08.000.0107.8	569
X L= 3500 MIT SCHIRM	08.000.0106.5	569
X L= 4000 MIT SCHIRM	08.000.0106.6	569
X L= 4000 OHNE SCHIRM	08.000.0108.0	569
X L= 4500 MIT SCHIRM	08.000.0106.7	569
X L= 4500 OHNE SCHIRM	08.000.0108.1	569
X L= 5000 MIT SCHIRM	08.000.0106.8	569
X L= 5000 OHNE SCHIRM	08.000.0108.2	569
X L= 6000 MIT SCHIRM	08.000.0106.9	569
X L= 6000 OHNE SCHIRM	08.000.0108.3	569
X L= 7000 MIT SCHIRM	08.000.0107.0	569
X L= 7000 OHNE SCHIRM	08.000.0108.4	569
X L= 8000 MIT SCHIRM	08.000.0107.1	569
X L= 8000 OHNE SCHIRM	08.000.0108.5	569
X L= 9000 MIT SCHIRM	08.000.0107.2	569
X L= 9000 OHNE SCHIRM	08.000.0108.6	569
X L=10000 MIT SCHIRM	08.000.0107.3	569
X L=10000 OHNE SCHIRM	08.000.0108.7	569
Y BANDBREITE BIS 8M	08.000.0108.9	569
ZP 2,5 U/8113 S/V/V0	07.312.1655.0	136
ZP 2,5 U/8113 S/V/V0	07.312.1655.0	310
ZP 2,5 U/8113 S/V BL/V0	07.312.1655.6	311
ZP 2,5 U/8113 S/V BL/V0	07.312.1655.6	137
ZP 2,5 U/D/8113 S/V/V0	07.311.9155.0	312
ZP 2,5 U/D/8113 S/V/V0	07.311.9155.0	134
ZP2,5U/D/8113 S/V BL/V0	07.311.9155.6	313
ZWISCHENPLATTE	07.300.2753.0	374

contents of part number

contents PART NUMBER

Part no.	Type	section / page
01.001.5053.0	ISOLIERGEHAEUSE	584
01.001.5153.0	ISOLIERGEHAEUSE	584
01.001.5353.0	ISOLIERGEHAEUSE	586
01.001.5453.0	ISOLIERGEHAEUSE	586
01.001.5593.0		588
01.001.5653.0	ISOLIERGEHAEUSE	588
01.001.5753.0	ISOLIERGEHAEUSE	588
01.001.5853.0	ISOLIERGEHAEUSE	588
01.001.5993.0		588
01.001.6293.0		591
01.001.6493.0		590
01.001.6553.0	ISOLIERGEHAEUSE	590
01.001.6653.0	ISOLIERGEHAEUSE	590
01.001.6753.0	ISOLIERGEHAEUSE	590
01.060.0253.0	8113 BK / 2	291
01.060.0353.0	8113 BK / 3	291
01.060.0453.0	8113 BK / 4	291
01.060.0553.0	8113 BK / 5	291
01.060.0653.0	8113 BK / 6	291
01.060.0753.0	8113 BK / 7	291
01.060.0853.0	8113 BK / 8	291
01.060.0953.0	8113 BK / 9	291
01.060.1053.0	8113 BK / 10	291
01.060.1153.0	8113 BK / 11	291
01.060.1253.0	8113 BK / 12	291
01.060.1353.0	8113 BK / 13	291
01.060.1453.0	8113 BK / 14	291
01.060.1553.0	8113 BK / 15	291
01.060.1653.0	8113 BK / 16	291
01.060.3253.0	8113 BK / 2 OB	291
01.060.3353.0	8113 BK / 3 OB	291
01.060.3453.0	8113 BK / 4 OB	291
01.060.3553.0	8113 BK / 5 OB	291
01.060.3653.0	8113 BK / 6 OB	291
01.060.3753.0	8113 BK / 7 OB	291
01.060.3853.0	8113 BK / 8 OB	291
01.060.3953.0	8113 BK / 9 OB	291
01.060.4053.0	8113 BK / 10 OB	291
01.060.4153.0	8113 BK / 11 OB	291
01.060.4253.0	8113 BK / 12 OB	291
01.060.4353.0	8113 BK / 13 OB	291
01.060.4453.0	8113 BK / 14 OB	291
01.060.4553.0	8113 BK / 15 OB	291
01.060.4653.0	8113 BK / 16 OB	291
01.108.3255.0	WKI SH/U /V0	69
01.108.7653.0	WKIF/SH/35	55
01.112.1453.0	9701 A SH S35	193
01.299.9753.0		177
02.123.7001.0		631
02.123.7021.0	FUER 0,5 MM2	631
02.123.7101.0		631
02.123.7121.0	FUER 0,75-1 MM2	631
02.123.7201.0	FUER 1,5 MM2 VERGOLD	631
02.123.7221.0	FUER 1,5 MM2	631
02.123.7301.0		631
02.123.7321.0	FUER 2,5 MM2	631
02.123.7401.0		631
02.123.7421.0	FUER 4 MM2	631
02.124.0900.0	0,2 -0,56 QMM	683
02.124.0929.0	0,2 -0,56 QMM	683
02.124.1000.0	0,5 -01,5 QMM	683
02.124.1029.0	0,5 -1,5 QMM	683
02.124.1400.0	0,5 -1,5 QMM VERGOLDET	683
02.124.1429.0	0,5 -1,5 QMM VERGOLDET	683
02.124.4000.0		207
02.124.4029.0	FEDERKONTAKT	207
02.124.4100.0	FEDERKONTAKT	207
02.124.4129.0		207
02.125.1121.0	BUCHSENKONTAKT	761
02.125.1600.0	FEDERKONTAKT BAND	291
02.125.1629.0	FEDERKONTAKT	291
02.125.1700.0	FEDERKONTAKT BAND	291
02.125.1729.0	FEDERKONTAKT	291
02.125.3129.8	BUCHSENKONTAKT	739
02.125.3229.8	BUCHSENKONTAKT	740
02.125.3329.8	BUCHSENKONTAKT	740
02.125.3429.8	BUCHSENKONTAKT	740
02.125.3529.8	BUCHSENKONTAKT	740
02.125.3629.8	BUCHSENKONTAKT	740
02.125.3729.8	BUCHSENKONTAKT	740
02.125.3829.8	BUCHSENKONTAKT	740
02.125.3929.8	BUCHSENKONTAKT	740
02.125.4029.8	BUCHSENKONTAKT	740
02.125.4129.8	BUCHSENKONTAKT	740
02.125.4229.8	BUCHSENKONTAKT	740
02.125.4329.8	BUCHSENKONTAKT	740
02.125.4429.8	BUCHSENKONTAKT	740
02.125.4529.8	BUCHSENKONTAKT	740
02.125.4629.7	BUCHSENKONTAKT	740
02.125.4729.7	BUCHSENKONTAKT	740
02.220.0121.0	FKK18 / 1	217
02.220.0321.0	FKK18 / 2	217
02.220.0421.0	FKK18 / 3	217
04.007.1080.0	BZ KL 28 / 1 - 99	214
04.007.3080.0	BZ KL 29 / 1 - 55	214
04.007.4089.0	BZ 8190 / 1 - 12	306
04.007.4189.0	BZ 8190 / 13 - 24	306
04.007.4289.0	BZ 8190 / 25 - 36	306
04.007.4389.0	BZ 8190 / 37 - 48	306
04.007.4489.0	BZ 8190 / 49 - 60	306
04.007.4589.0	BZ 8190 / 61 - 72	306
04.007.4689.0	BZ 8190 / 73 - 84	306
04.007.4789.0	BZ 8190 / 85 - 96	306
04.007.4889.0	BZ 8190 / 97 - 108	306
04.019.0289.0	BEZ.BLATT PERF.	47
04.019.0889.0	BEZ.BLATT PERF.	183
04.030.0080.0	8006 / 2 BZ	260
04.030.0180.0	8006 / 3 BZ	260
04.030.0280.0	8006 / 4 BZ	260
04.030.0380.0	8006 / 5 BZ	260
04.030.0480.0	8006 / 6 BZ	260
04.030.1080.0	8006 / 12 BZ	260
04.030.1180.0	8006 M BZ	260
04.033.0080.0		260
04.033.0180.0	8130 / 3 BZ	260
04.033.0280.0	8130 / 4 BZ	260
04.033.0380.0	8130 / 5 BZ	260
04.033.0480.0	8130 / 6 BZ	260
04.033.1080.0	8130 / 12 BZ	260
04.033.1180.0	8130 M BZ	260
04.070.0280.0	10E / 2 BZ	260
04.070.0380.0	10E / 3 BZ	260
04.070.0480.0	10E / 4 BZ	260
04.070.0580.0	10E / 5 BZ	260
04.070.0680.0	10E / 6 BZ	260
04.070.1280.0	10E / 12 BZ	260
04.070.1380.0	10E / M BZ	260
04.071.0280.0		260
04.071.0380.0		260
04.071.0480.0		260
04.071.0580.0		260
04.071.0680.0		260
04.071.1280.0	10E / 12 DBZ	260
04.071.1380.0		260
04.080.0080.0	8016 / 2 BZ	260
04.080.0180.0	8016 / 3 BZ	260
04.080.0280.0	8016 / 4 BZ	260
04.080.0380.0	8016 / 5 BZ	260
04.080.0480.0	8016 / 6 BZ	260
04.080.1080.0	8016 / 12 BZ	260
04.080.1180.0	8016 M BZ	260
04.090.0280.0	16E / 2 BZ	260
04.090.0380.0	16E / 3 BZ	260
04.090.0480.0	16E / 4 BZ	260
04.090.0580.0	16E / 5 BZ	260
04.090.0680.0	16E / 6 BZ	260
04.090.1280.0	16E / 12 BZ	260
04.090.1380.0	16E / M BZ	260
04.210.0652.0	BEZ.KLAPPSCHILD	183
04.210.0752.0	BEZ.KLAPPSCHILD	183
04.232.0051.0	BZ 12	218
04.240.0953.0	BEZ.-SCHILD	392
04.241.0651.0	9003 C	584
04.241.1150.0	9704 A	181
04.241.1150.0	9704 A	598
04.241.1150.0	9704 A	791
04.242.0651.0		592
04.242.0800.0		349
04.242.0850.0	9705 A	90
04.242.0850.0	9705 A	321
04.242.0850.0	9705 A	588
04.242.0850.0	9705 A	790
04.242.1050.0	9003 C / 4	394
04.242.1050.0	9003 C / 4	584
04.242.1553.0	9705 AL	90
04.242.1553.0	9705 AL	394
04.242.1553.0	9705 AL	410
04.242.1553.0	9705 AL	790
04.242.2853.0	9705 A / 4 W	790
04.242.3053.0	9705 A / 6,7/6-90GRAD	790
04.242.3253.0		204
04.242.3353.0	9705 A / 6.7/9-90GRAD 3	790
04.242.3453.0	9705 A / 6,7/6-90GRAD 5	790
04.242.3553.0	9705 A / 6,7/6-90GRAD 8	790
04.242.3653.0	9705 A / 6,7/6-90GRAD12	790
04.242.3853.0	BEZ.SCHILDTRAEGER	781
04.242.4253.0	BEZ.SCHILDTRAEGER	349
04.242.4453.0	BEZ.SCHILDTRAEGER	781
04.242.4653.0	BEZ.SCHILDTRAEGER	357
04.242.5053.0	9705 A / 5 / 10	91
04.242.5053.0	9705 A / 5 / 10	349
04.242.5053.0	9705 A / 5 / 10	596
04.242.5053.0	9705 A / 5 / 10	790
04.242.5153.0	9705 A L / 5/ 10	91
04.242.5153.0	9705 A L / 5/ 10	394
04.242.5153.0	9705 A L / 5/ 10	596
04.242.5153.0	9705 A L / 5/ 10	790
04.242.5853.0	BEZ.SCHILDTRAEGER	349
04.242.6053.0	9705 A / 6 / 10	91
04.242.6353.0	9705 A L / 6/ 10	91
04.242.6753.0	9705A/6,7/ 12	790
04.242.7553.0	9705 A / 7,5 / 10	351
04.242.8053.0	9705 A / 8 / 10	201
04.244.1853.0	WIEBOX CN BZ	502
04.249.1053.0	BEZ.PLATTE	499
04.249.1553.0	BEZ.PLATTE	499
04.249.2053.0	BEZ.PLATTE	499
04.249.4053.0	BEZ.PLATTE	499
04.312.0554.0	ABDECKUNG	584
04.312.0654.0	ABDECKUNG	584
04.312.2056.0	ABDECKUNG	125
04.312.3054.0	ABDECKUNG	585
04.312.3154.0		586
04.312.3254.0	ABDECKUNG	587
04.312.3354.0	ABDECKUNG	585
04.312.3454.0	ABDECKUNG	586
04.312.3554.0	ABDECKUNG	587
04.325.1056.0	ABDECKG.M.WARNZCH	189
04.325.1156.0	ABDECKG.M.WARNZCH	189
04.325.1256.0	ABDECKG.M.WARNZCH	189
04.325.1356.0	ABDECKG.M.WARNZCH	191
04.325.1456.0	ABDECKG.M.WARNZCH	189
04.325.1656.0	ABDECKG.M.WARNZCH	189
04.325.8553.8	FUER WKI 10/U	69
04.325.8653.8	FUER WKI 16/U	79
04.325.8753.0		86
04.325.8753.8		79
04.326.0056.0	ABDECKUNG	152
04.326.1053.0	ABDECKUNG	128
04.326.2053.0		310
04.326.2053.8	AD VB 2,5 GELB	101
04.326.2053.8	AD VB 2,5 GELB	312
04.326.2153.8	AD VB 4 GELB	78
04.326.2253.8	AD VB 6 GELB	103
04.326.2353.8	AD VB 10 GELB	82
04.326.2453.8	AD VB 16 GELB	69
04.326.2553.8	AD VB 35 GELB	105
04.326.2653.8	AD VB 70 GELB	105
04.326.2953.8	AD VB 4 / 15 GELB	114
04.326.3053.8	AD VB WKM 2,5 / 15 GELB	144
04.342.0556.0	AD VB 5 / 10	120
04.342.0556.8	AD VB 5 / 10 GELB	116
04.342.0653.8		140
04.342.0656.8	AD VB 6/10 GELB	112
04.342.1056.8	AD VB 10/10 GELB	78
04.342.2656.8	AD VB 6 / 10 E GELB	114
04.342.3556.8	AD VB 5 / 10 P GELB	102
04.342.3556.8	AD VB 5 / 10 P GELB	312
04.342.3656.8	AD VB 6/10 P GELB	103
04.342.3856.8	AD VB 8/10 P GELB	103
04.342.4056.8	AD VB 10/10 P GELB	103
04.342.5656.8	AD VB 6 / 10 E P GELB	174
04.343.4756.8	ABDECKG.M.WARNZCH	102
04.343.4856.8	ABDECKG.M.WARNZCH	69
04.343.4956.8	ABDECKG.M.WARNZCH	103
04.343.5056.8	ABDECKG.M.WARNZCH	103
04.343.5156.8	ABDECKG.M.WARNZCH	104
04.343.5256.8	ABDECKG.M.WARNZCH	105
04.343.5356.8	ABDECKG M WARNZCH	105
04.343.5456.8	ABDECKG M WARNZCH	105
04.343.5856.6		86
04.343.5856.8		82
04.343.6053.8	ADF 2,5/4 GELB	20
04.343.6053.8	ADF 2,5/4 GELB	308
04.343.6153.8	ADF 4/4 GELB	19
04.343.6253.8	ADF 6/4 GELB	21
04.343.6453.8	ADF10/4 GELB	21
04.343.6653.8	ADF16/4 GELB	21
04.343.6853.8	ABDECKUNG	36
04.343.6853.8	ABDECKUNG	308
04.343.8053.0	AD VM-1,5/8 SCHWARZ	45
04.343.8353.8	ABDECKUNG	33
04.343.9056.0		310
04.343.9056.8	ABDECKSTREIFEN	134
04.343.9056.8	ABDECKSTREIFEN	312
04.343.9156.0		310
04.343.9156.8	ABDECKG.M.WARNZCH	134
04.343.9156.8	ABDECKG.M.WARNZCH	312
04.344.0153.8	.ADC 1 GELB	232
04.344.0353.8	ADC 2,5 GELB	231
04.832.0051.0	BZ 12 B	218
04.841.0651.0	9003 C B	584
04.841.1150.0	9704 A / 1 B	181
04.841.1150.0	9704 A / 1 B	395
04.841.1150.0	9704 A / 1 B	598
04.841.1150.0	9704 A / 1 B	791
04.841.1250.0	9704 A / 2 B	181
04.841.1250.0	9704 A / 2 B	395
04.841.1250.0	9704 A / 2 B	598
04.841.1250.0	9704 A / 2 B	791
04.841.1350.0	9704 A / 3 B	181
04.841.1350.0	9704 A / 3 B	395
04.841.1350.0	9704 A / 3 B	598
04.841.1350.0	9704 A / 3 B	791
04.841.1450.0	9704 A / 4 B	181

contents

Part no.	Type	section / page
04.841.1450.0	9704 A / 4 B	395
04.841.1450.0	9704 A / 4 B	598
04.841.1450.0	9704 A / 4 B	791
04.841.1550.0	9704 A / 5 B	181
04.841.1550.0	9704 A / 5 B	395
04.841.1550.0	9704 A / 5 B	598
04.841.1550.0	9704 A / 5 B	791
04.841.1650.0	9704 A / 6 B	181
04.841.1650.0	9704 A / 6 B	395
04.841.1650.0	9704 A / 6 B	598
04.841.1650.0	9704 A / 6 B	791
04.841.1750.0	9704 A / 7 B	181
04.841.1750.0	9704 A / 7 B	395
04.841.1750.0	9704 A / 7 B	598
04.841.1750.0	9704 A / 7 B	791
04.841.1850.0	9704 A / 8 B	181
04.841.1850.0	9704 A / 8 B	395
04.841.1850.0	9704 A / 8 B	598
04.841.1850.0	9704 A / 8 B	791
04.841.1950.0	9704 A / 9 B	181
04.841.1950.0	9704 A / 9 B	395
04.841.1950.0	9704 A / 9 B	598
04.841.1950.0	9704 A / 9 B	791
04.841.2050.0	9704 A / 0 B	181
04.841.2050.0	9704 A / 0 B	395
04.841.2050.0	9704 A / 0 B	598
04.841.2050.0	9704 A / 0 B	791
04.841.2150.0	9704 A / 1-0 B	181
04.841.2150.0	9704 A / 1-0 B	349
04.841.2150.0	9704 A / 1-0 B	598
04.841.2150.0	9704 A / 1-0 B	791
04.841.2250.0	9704 A /AG B	395
04.841.2250.0	9704 A /AG B	598
04.841.2250.0	9704 A /AG B	791
04.841.2350.0	9704 A /BG B	395
04.841.2350.0	9704 A /BG B	598
04.841.2350.0	9704 A /BG B	791
04.841.2450.0	9704 A /CG B	395
04.841.2450.0	9704 A /CG B	598
04.841.2450.0	9704 A /CG B	791
04.841.2550.0	9704 A /DG B	395
04.841.2550.0	9704 A /DG B	598
04.841.2550.0	9704 A /DG B	791
04.841.2650.0	9704 A /EG B	395
04.841.2650.0	9704 A /EG B	598
04.841.2650.0	9704 A /EG B	791
04.841.2750.0	9704 A /FG B	395
04.841.2750.0	9704 A /FG B	598
04.841.2750.0	9704 A /FG B	791
04.841.2850.0	9704 A /GG B	395
04.841.2850.0	9704 A /GG B	598
04.841.2850.0	9704 A /GG B	791
04.841.2950.0	9704 A /HG B	395
04.841.2950.0	9704 A /HG B	598
04.841.2950.0	9704 A /HG B	791
04.841.3050.0	9704 A /IG B	395
04.841.3050.0	9704 A /IG B	598
04.841.3050.0	9704 A /IG B	791
04.841.3150.0	9704 A /JG B	395
04.841.3150.0	9704 A /JG B	598
04.841.3150.0	9704 A /JG B	791
04.841.3250.0	9704 A /KG B	395
04.841.3250.0	9704 A /KG B	598
04.841.3250.0	9704 A /KG B	791
04.841.3350.0	9704 A /LG B	395
04.841.3350.0	9704 A /LG B	598
04.841.3350.0	9704 A /LG B	791
04.841.3450.0	9704 A /MG B	395
04.841.3450.0	9704 A /MG B	598
04.841.3450.0	9704 A /MG B	791
04.841.3550.0	9704 A /NG B	395
04.841.3550.0	9704 A /NG B	598
04.841.3550.0	9704 A /NG B	791
04.841.3650.0	9704 A /OG B	395
04.841.3650.0	9704 A /OG B	598
04.841.3650.0	9704 A /OG B	791
04.841.3750.0	9704 A /PG B	395
04.841.3750.0	9704 A /PG B	598
04.841.3750.0	9704 A /PG B	791
04.841.3850.0	9704 A /QG B	395
04.841.3850.0	9704 A /QG B	598
04.841.3850.0	9704 A /QG B	791
04.841.3950.0	9704 A /RG B	395
04.841.3950.0	9704 A /RG B	598
04.841.3950.0	9704 A /RG B	791
04.841.4050.0	9704 A /SG B	395
04.841.4050.0	9704 A /SG B	598
04.841.4050.0	9704 A /SG B	791
04.841.4150.0	9704 A /TG B	395
04.841.4150.0	9704 A /TG B	598
04.841.4150.0	9704 A /TG B	791
04.841.4250.0	9704 A /UG B	395
04.841.4250.0	9704 A /UG B	598
04.841.4250.0	9704 A /UG B	791
04.841.4350.0	9704 A /VG B	395
04.841.4350.0	9704 A /VG B	598
04.841.4350.0	9704 A /VG B	791
04.841.4450.0	9704 A /WG B	395
04.841.4450.0	9704 A /WG B	598
04.841.4450.0	9704 A /WG B	791
04.841.4550.0	9704 A /XG B	395
04.841.4550.0	9704 A /XG B	598
04.841.4550.0	9704 A /XG B	791
04.841.4650.0	9704 A /YG B	395
04.841.4650.0	9704 A /YG B	598
04.841.4650.0	9704 A /YG B	791
04.841.4750.0	9704 A /ZG B	395
04.841.4750.0	9704 A /ZG B	598
04.841.4750.0	9704 A /ZG B	791
04.841.4850.0	9704 A /AK B	395
04.841.4850.0	9704 A /AK B	599
04.841.4850.0	9704 A /AK B	791
04.841.4950.0	9704 A /BK B	395
04.841.4950.0	9704 A /BK B	599
04.841.4950.0	9704 A /BK B	791
04.841.5050.0	9704 A /CK B	395
04.841.5050.0	9704 A /CK B	599
04.841.5050.0	9704 A /CK B	791
04.841.5150.0	9704 A /DK B	395
04.841.5150.0	9704 A /DK B	599
04.841.5150.0	9704 A /DK B	791
04.841.5250.0	9704 A /EK B	395
04.841.5250.0	9704 A /EK B	599
04.841.5250.0	9704 A /EK B	791
04.841.5350.0	9704 A /FK B	395
04.841.5350.0	9704 A /FK B	599
04.841.5350.0	9704 A /FK B	791
04.841.5450.0	9704 A /GK B	395
04.841.5450.0	9704 A /GK B	599
04.841.5450.0	9704 A /GK B	791
04.841.5550.0	9704 A /HK B	395
04.841.5550.0	9704 A /HK B	599
04.841.5550.0	9704 A /HK B	791
04.841.5650.0	9704 A /IK B	395
04.841.5650.0	9704 A /IK B	599
04.841.5650.0	9704 A /IK B	791
04.841.5750.0	9704 A /JK B	395
04.841.5750.0	9704 A /JK B	791
04.841.5850.0	9704 A /KK B	395
04.841.5850.0	9704 A /KK B	791
04.841.5950.0	9704 A /LK B	395
04.841.5950.0	9704 A /LK B	791
04.841.6050.0	9704 A /MK B	395
04.841.6050.0	9704 A /MK B	599
04.841.6050.0	9704 A /MK B	791
04.841.6150.0	9704 A /NK B	395
04.841.6150.0	9704 A /NK B	599
04.841.6150.0	9704 A /NK B	791
04.841.6250.0	9704 A /OK B	395
04.841.6250.0	9704 A /OK B	599
04.841.6250.0	9704 A /OK B	791
04.841.6350.0	9704 A /PK B	395
04.841.6350.0	9704 A /PK B	599
04.841.6350.0	9704 A /PK B	791
04.841.6450.0	9704 A /QK B	395
04.841.6450.0	9704 A /QK B	599
04.841.6450.0	9704 A /QK B	791
04.841.6550.0	9704 A /RK B	395
04.841.6550.0	9704 A /RK B	599
04.841.6550.0	9704 A /RK B	791
04.841.6650.0	9704 A /SK B	395
04.841.6650.0	9704 A /SK B	599
04.841.6650.0	9704 A /SK B	791
04.841.6750.0	9704 A /TK B	395
04.841.6750.0	9704 A /TK B	599
04.841.6750.0	9704 A /TK B	791
04.841.6850.0	9704 A /UK B	395
04.841.6850.0	9704 A /UK B	599
04.841.6850.0	9704 A /UK B	791
04.841.6950.0	9704 A /VK B	395
04.841.6950.0	9704 A /VK B	599
04.841.6950.0	9704 A /VK B	791
04.841.7050.0	9704 A /WK B	395
04.841.7050.0	9704 A /WK B	599
04.841.7050.0	9704 A /WK B	791
04.841.7150.0	9704 A /XK B	395
04.841.7150.0	9704 A /XK B	599
04.841.7150.0	9704 A /XK B	791
04.841.7250.0	9704 A /YK B	395
04.841.7250.0	9704 A /YK B	599
04.841.7250.0	9704 A /YK B	791
04.841.7350.0	9704 A /ZK B	395
04.841.7350.0	9704 A /ZK B	599
04.841.7350.0	9704 A /ZK B	791
04.841.7450.0	9704 A /+ B	181
04.841.7450.0	9704 A /+ B	395
04.841.7450.0	9704 A /+ B	599
04.841.7450.0	9704 A /+ B	791
04.841.7550.0	9704 A /- B	181
04.841.7550.0	9704 A /- B	395
04.841.7550.0	9704 A /- B	599
04.841.7550.0	9704 A /- B	791
04.841.7650.0	9704 A // B	181
04.841.7650.0	9704 A // B	395
04.841.7650.0	9704 A // B	599
04.841.7650.0	9704 A // B	791
04.841.7750.0	9704 A /. B	181
04.841.7750.0	9704 A /. B	395
04.841.7750.0	9704 A /. B	599
04.841.7750.0	9704 A /. B	791
04.841.9050.0	111..BIS 000..	181
04.841.9050.0	111..BIS 000..	395
04.841.9050.0	111..BIS 000..	791
04.841.9150.0	A BIS Z GB	181
04.841.9150.0	A BIS Z GB	395
04.841.9150.0	A BIS Z GB	791
04.841.9250.0	A BIS Z KB	181
04.841.9250.0	A BIS Z KB	395
04.841.9250.0	A BIS Z KB	791
04.842.0153.0		101
04.842.0651.0		592
04.842.0850.0	9705 A B	90
04.842.0850.0	9705 A B	321
04.842.0850.0	9705 A B	588
04.842.0850.0	9705 A B	790
04.842.1553.0	9705 AL B	90
04.842.1553.0	9705 AL B	394
04.842.1553.0	9705 AL B	596
04.842.1553.0	9705 AL B	790
04.842.4953.0	9705A/5/ 9 B 1- 9	91
04.842.4953.0	9705A/5/ 9 B 1- 9	394
04.842.4953.0	9705A/5/ 9 B 1- 9	596
04.842.5053.0	9705 A / 5 / 10 B	55
04.842.5053.0	9705 A / 5 / 10 B	349
04.842.5053.0	9705 A / 5 / 10 B	596
04.842.5053.0	9705 A / 5 / 10 B	790
04.842.5153.0	9705 A L / 5/ 10 B	790
04.842.5553.0	9705 A / 5 / 10 / 5 B	55
04.842.5553.0	9705 A / 5 / 10 / 5 B	394
04.842.5553.0	9705 A / 5 / 10 / 5 B	596
04.842.5953.0	9705A/6/ 9 B 1- 9	91
04.842.6053.0	9705 A / 6 / 10 B	69
04.842.6553.0	9705 A / 6 / 10 / 5 B	69
04.842.6753.0	9705A/6,7/ 12 B	790
04.842.7553.0	9705 A / 7,5 / 10 B	351
04.842.7953.0	9705A/8/ 9 B 1- 9	201
04.842.8053.0	9705 A / 8 / 10 B	189
04.842.8553.0	9705 A / 8 / 10 / 5 B	91
04.845.0153.0	9705A/5/10 B 1- 10	91
04.845.0253.0	9705A/5/10 B 11- 20	91
04.845.0353.0	9705A/5/10 B 21- 30	91
04.845.0453.0	9705A/5/10 B 31- 40	91
04.845.0553.0	9705A/5/10 B 41- 50	91
04.845.0653.0	9705A/5/10 B 51- 60	91
04.845.0753.0	9705A/5/10 B 61- 70	91
04.845.0853.0	9705A/5/10 B 71- 80	91
04.845.0953.0	9705A/5/10 B 81- 90	91
04.845.1053.0	9705A/5/10 B 91-100	91
04.846.0153.0	9705A/6/10 B 1- 10	91
04.846.0253.0	9705A/6/10 B 11- 20	91
04.846.0353.0	9705A/6/10 B 21- 30	91
04.846.0453.0	9705A/6/10 B 31- 40	91
04.846.0553.0	9705A/6/10 B 41- 50	91
04.846.0653.0	9705A/6/10 B 51- 60	91
04.846.0753.0	9705A/6/10 B 61- 70	91
04.846.0853.0	9705A/6/10 B 71- 80	91
04.846.0953.0	9705A/6/10 B 81- 90	91
04.846.1053.0	9705A/6/10 B 91-100	91
04.848.0153.0	9705A/8/10 B 1- 10	201
04.848.0253.0	9705A/8/10 B 11- 20	201
04.848.0353.0	9705A/8/10 B 21- 30	201
04.848.0453.0	9705A/8/10 B 31- 40	201
04.848.0553.0	9705A/8/10 B 41- 50	201
04.848.0653.0	9705A/8/10 B 51- 60	201
04.848.0753.0	9705A/8/10 B 61- 70	201
04.848.0853.0	9705A/8/10 B 71- 80	201
04.848.0953.0	9705A/8/10 B 81- 90	201
04.848.1053.0	9705A/8/10 B 91-100	201
04.855.0053.0	9705A/5/10B SLZ	91
04.855.0153.0	9705A/5/10B ERDZ	91
04.855.0253.0	9705A/5/10 B +	91
04.855.0253.5	9705A/5/10 B + ROT	120
04.855.0353.0	9705A/5/10 B -	91
04.855.0353.6	9705A/5/10 B - BLAU	120
04.855.0453.0	9705A/5/10B L1	91
04.855.0553.0	9705A/5/10B L2	91
04.855.0653.0	9705A/5/10B L3	91
04.855.0753.0	9705A/5/10B PE	91
04.855.0853.0	9705A/5/10B L1L2L3NPE..	91
04.855.0953.0	9705A/5/10B F1	91
04.855.1053.0	9705A/5/10B F2	91
04.855.3153.0	9705A/5/10B SL	91
04.855.3253.0	9705A/5/10B N	91
04.856.0053.0	9705A/6/10 B SLZ	91
04.856.0153.0	9705A/6/10 B ERDZ	91

contents of part number

contents PART NUMBER

Part no.	Type	section / page
04.856.0253.0	9705A/6/10B +	91
04.856.0353.0	9705A/6/10B -	91
04.856.0453.0	9705A/6/10 B L1	19
04.856.0553.0	9705A/6/10 B L2	91
04.856.0653.0	9705A/6/10 B L3	91
04.856.0753.0	9705A/6/10B PE	91
04.856.0853.0	9705A/6/10B L1L2L3NPE..	91
04.856.0953.0	9705A/6/10B F1	91
04.856.1053.0	9705A/6/10B F2	91
04.856.3153.0	9705A/6/10B SL	91
04.856.3253.0	9705A/6/10B N	91
04.858.0053.0	9705A/8/10B SLZ	201
04.858.0153.0	9705A/8/10B ERDZ	201
04.858.0253.0	9705A/8/10B +	201
04.858.0353.0	9705A/8/10B -	201
04.858.0453.0	9705A/8/10B L1	201
04.858.0553.0	9705A/8/10B L2	201
04.858.0653.0	9705A/8/10B L3	201
04.858.0753.0	9705A/8/10B PE	201
04.858.0853.0	9705A/8/10B L1L2L3NPE..	201
04.858.0953.0	9705A/8/10B F1	201
04.858.1053.0	9705A/8/10B F2	201
04.858.3153.0	9705A/8/10B SL	201
04.858.3253.0	9705A/8/10B N	201
05.084.0212.0		390
05.091.0200.0		47
05.502.0000.0	HOCHPOL.	683
05.502.0200.0	AUSDRUECKWERKZEUG	207
05.502.0410.0	MOD.20POL.	741
05.502.0500.0	KLINGE	207
05.502.0610.0	MOD. 4POL.	741
05.502.0710.0	MOD.10POL.	741
05.502.0810.0	MOD. 5POL.	741
05.502.0910.0	MOD. 3POL.	741
05.502.1010.0	MODULLOESEWZ.	741
05.502.2000.0	CRIMPBACKEN A	741
05.502.2000.0	CRIMPBACKEN A	798
05.502.2100.0	CRIMPBACKEN B	631
05.502.2100.0	CRIMPBACKEN B	798
05.502.2200.0	CRIMPBACKEN C	741
05.502.2200.0	CRIMPBACKEN C	798
05.502.2300.0	CRIMPBACKEN D	739
05.502.2300.0	CRIMPBACKEN D	798
05.502.2400.0	CRIMPBACKEN E	683
05.502.2400.0	CRIMPBACKEN E	798
05.502.2500.0		291
05.502.3100.0	KONT.AUFNAHME 1	739
05.502.3100.0	KONT.AUFNAHME 1	798
05.502.3200.0	KONT.AUFNAHME 2	683
05.502.3200.0	KONT.AUFNAHME 2	798
05.502.3300.0	KONT.AUFNAHME 3	631
05.502.3300.0	KONT.AUFNAHME 3	798
05.502.3500.0	F. 400/690V-SER.	631
05.507.4021.0	M 20 x 1,5	779
05.507.4053.0	M 20 x 1,5	779
05.507.4121.0	M 25 x 1,5	779
05.507.4153.0	M 25 x 1,5	779
05.507.4221.0	M 32 x 1,5	779
05.507.4253.0	M 32 x 1,5	779
05.507.4321.0	M 40 x 1,5	779
05.507.4353.0	M 40 x 1,5	779
05.507.7621.0	PG 13,5 - M 20 x 1,5	778
05.507.7721.0	PG 16 - M 20 x 1,5	778
05.507.7821.0	PG 21 - M 25 x 1,5	778
05.507.8121.0	M 20 x 1,5 - PG 13,5	779
05.507.8221.0	M 20 x 1,5 - PG 16	779
05.507.8321.0	M 25 x 1,5 - PG 21	779
05.507.8421.0	M 32 x 1,5 - PG 29	779
05.507.8621.0	M 16 x 1,5 - M 20 x 1,5	778
05.507.8721.0	M 20 x 1,5 - M 25 x 1,5	778
05.507.8821.0	M 25 x 1,5 - M 32 x 1,5	778
05.507.8921.0	M 32 x 1,5 - M 40 x 1,5	778
05.507.9021.0	M 20 x 1,5 - M 16 x 1,5	778
05.507.9121.0	M 25 x 1,5 - M 20 x 1,5	778
05.507.9221.0	M 32 x 1,5 - M 25 x 1,5	778
05.507.9321.0	M 40 x 1,5 - M 32 x 1,5	778
05.508.3121.0	9011 A	191
05.508.3221.0	9011 B	101
05.508.6521.0	STECKERBUCHSE	191
05.508.8621.0	SCHRAUBBUCHSE	197
05.508.8721.0	SCHRAUBBUCHSE	197
05.508.8821.0	9011 C	176
05.508.882100		197
05.508.8921.0	9011 D	176
05.508.9721.0	SCHRAUBBUCHSE	197
05.509.6021.0	STECKERBUCHSE	176
05.511.2953.0		148
05.511.2953.7		148
05.511.2953.8		148
05.511.2953.9		148
05.513.4212.0	SPERRBOLZ.M.FEDRG	786
05.516.9510.0	GLEITMUTTER	215
05.522.0725.0	1039 W	263
05.522.7356.0	BEF.HALTER	331
05.522.7756.0	BEF.HALTER	331

Part no.	Type	section / page
05.522.7856.0	BEF.HALTER	331
05.523.1610.0	WINKEL RECHTS	204
05.523.1710.0	WINKEL LINKS	204
05.543.7001.0		631
05.543.7021.0	FUER 0,5 MM2	631
05.543.7101.0		631
05.543.7121.0	FUER 0,75-1 MM2	631
05.543.7201.0	FUER 1,5 MM2 VERGOLD	631
05.543.7221.0	FUER 1,5 MM2	631
05.543.7301.0		631
05.543.7321.0	FUER 2,5 MM2	631
05.543.7401.0		631
05.543.7421.0	FUER 4 MM2	631
05.543.9021.0	FUER 0,5 MM2 KURZ	655
05.543.9121.0	FUER 0,75-1 MM2	655
05.543.9221.0	FUER 1,5 MM2 KURZ	655
05.543.9321.0	FUER 2,5 MM2 KURZ	655
05.543.9421.0	FUER 4 MM2	655
05.544.0900.0	0,2 -0,56 QMM	683
05.544.0929.0	0,2 -0,56 QMM	683
05.544.1000.0	0,5 -1,5 QMM	683
05.544.1029.0	0,5 -1,5 QMM	683
05.544.1400.0	0,5 -1,5 QNN VERGOLDET	683
05.544.1429.0	0,5 -1,5 QMM VERGOLDET	683
05.544.3129.8	STECKERKONTAKT	739
05.544.3229.8	STECKERKONTAKT	740
05.544.3329.8	STECKERKONTAKT	740
05.544.3429.8	STECKERKONTAKT	740
05.544.3529.8	STECKERKONTAKT	740
05.544.3629.8	STECKERKONTAKT	740
05.544.3729.8	STECKERKONTAKT	740
05.544.3829.8	STECKERKONTAKT	740
05.544.3929.8	STECKERKONTAKT	740
05.544.4029.8	STECKERKONTAKT	740
05.544.4129.8	STECKERKONTAKT	740
05.544.4229.8	STECKERKONTAKT	740
05.544.4329.8	STECKERKONTAKT	740
05.544.4429.8	STECKERKONTAKT	740
05.544.4529.8	STECKERKONTAKT	740
05.544.4629.7	STECKERKONTAKT	740
05.544.4729.7	STECKERKONTAKT	740
05.544.5621.0	STECKERKONTAKT	761
05.549.0500.0	HALTEFEDER	128
05.549.1200.0	KONTAKTFEDER	177
05.555.8521.0	FLACHSTECKER	584
05.555.8621.0	FLACHSTECKER	584
05.555.8721.0	FLACHSTECKER	584
05.555.8821.0	FLACHSTECKER	584
05.555.8921.0	FLACHSTECKER	584
05.555.9121.0	FLACHSTECKER	584
05.561.0053.0	CODIERAST STIFTL.	36
05.561.0053.0	CODIERAST STIFTL.	284
05.561.1389.0		412
05.561.4125.0	VERB.-SCHIENE	134
05.561.4125.0	VERB.-SCHIENE	310
05.561.6553.0	LEL 2,5/1 WEISS	19
05.561.6553.0	LEL 2,5/1 WEISS	308
05.561.6653.0	LEL 2,5/2 GRAU	20
05.561.6653.0	LEL 2,5/2 GRAU	308
05.561.6753.0	LEL 2,5/3 SCHWARZ	19
05.561.6753.0	LEL 2,5/3 SCHWARZ	308
05.561.8553.0	LEL 4/1 WEISS	20
05.561.8653.0	LEL 4/2 GRAU	20
05.561.8753.0	LEL 4/3 SCHWARZ	20
05.561.9153.0	CODIERAST BU.LST.	37
05.561.9153.0	CODIERAST BU.LST.	286
05.561.9453.0	CODIERSTIFT-AST	319
05.561.9453.5	CODIERSTIFT-AST	319
05.561.9553.0	WIEBOX CN BL1	594
05.561.9653.0	WIEBOX CN BL2	594
05.562.1389.0		410
05.562.2453.0	LEL 1,5/1 WEISS	33
05.562.2453.0	LEL 1,5/1 WEISS	309
05.562.2553.0	LEL 1,5/2 GRAU	33
05.562.2553.0	LEL 1,5/2 GRAU	309
05.562.2653.0	LEL 1,5/3 SCHWARZ	33
05.562.2653.0	LEL 1,5/3 SCHWARZ	309
05.562.3183.0	GUMMISTOPFEN KL.	755
05.562.3283.0	GUMMISTOPFEN GR.	755
05.562.5957.1		389
05.562.6557.1		389
05.562.8257.1		389
05.563.5453.0		148
05.563.8053.0		124
05.576.5853.0	WK 2,5 U /8113 S-VS	137
05.576.5853.0	WK 2,5 U /8113 S-VS	311
05.576.8312.0		787
05.576.8412.0		787
05.576.8512.0		787
05.582.8153.0	SCHNELLMONT.GRIFF	175
05.582.8653.0	F.STCKHUELS.6,3 BIS2,5Q	175
05.582.8753.0		175
05.583.0053.0	TR.STUECK M. U-F	584
05.583.0053.0	TR.STUECK M. U-F	675
05.583.0153.0	TR.STUECK M. U-F	586

Part no.	Type	section / page
05.584.0053.0	CODIERSTUECK-AST	137
05.584.0053.0	CODIERSTUECK-AST	311
05.584.8853.0	TR.STUECK M. U-F	590
05.584.8953.0	TR.STUECK M. U-F	590
05.584.9489.0	SELBSTKLEBESCHILD	183
05.590.0052.0	315 E	182
05.590.3121.0	1036 R	263
05.591.1255.0		410
05.591.3089.0	ETIKETTEN A4	416
05.591.3255.0	RICOS DISK BASE	410
05.591.3389.0	RICOS MANUAL D	410
05.592.0621.0	SPERRBOLZ.M.FEDRG	786
05.592.1152.0		256
05.592.1953.0	TRENNSTUECK	215
05.592.7553.0	FUER NYAF 1,5 MM2	138
05.592.7653.0	FUER NYAF 2,5 MM2	138
05.593.4153.0	SCHNELLMONT.GRIFF	190
05.593.5853.0	SCHNELLMONT.GRIFF	190
05.593.5953.0	SCHNELLMONT.GRIFF	191
05.593.7756.0	SPERRSTUECK	331
05.593.8853.0	BEF.HALTER	331
05.594.3653.0	RASTHEBEL	331
05.594.5153.0	CODIERSTUECK-AST	219
05.594.5853.0	SCHNELLMONT.GRIFF	175
05.594.5953.0	SCHNELLMONT.GRIFF	175
05.594.6053.0	SCHNELLMONT.GRIFF	175
05.595.5900.0	2A	128
05.595.6000.0	4A	128
05.595.6100.0	6A	128
05.595.6200.0	10A	128
05.595.6300.0	16A	128
05.595.6400.0	20A	128
05.595.6500.0	25A	128
05.595.6600.0	35A	128
05.595.6700.0	50A	128
05.595.9200.0	2A	128
05.595.9300.0	4A	128
05.595.9400.0	6A	128
05.595.9500.0	10A	128
05.596.6127.0	2,08 GELB	797
05.599.2027.0	AEI 1,5Z-N	797
05.599.2853.0	BEF.HALTER	331
05.599.2953.0	BEF.HALTER	331
05.599.8053.0	CODIERSTUECK-AST	205
05.599.8053.0	CODIERSTUECK-AST	321
06.065.0021.0	AM 5 X 12 D 933SZMS	156
06.502.4000.0	DIN 5264 A 0,6 x 3,5	20
06.502.4000.0	DIN 5264 A 0,6 x 3,5	293
06.502.4000.0	DIN 5264 A 0,6 x 3,5	799
06.502.4100.0	DIN 5264 A 0,8 x 4,0	21
06.502.4200.0	DIN 5264 A 1,0 x 5,5	21
06.502.4300.0	DIN 5264 A 0,4 X 2,5	281
06.502.5000.0	DIN 5264 B 0,6X3,5 M	30
06.600.2027.0	DIN 46228-E 0,5 -8	796
06.600.2127.0	DIN 46228-E 0,75- 8	796
06.600.2227.0	DIN 46228-E 1 - 8	796
06.600.2327.0	DIN 46228-E 1,5 - 8	796
06.600.2427.0	DIN 46228-E 1,5 -18	796
06.600.2527.0	DIN 46228-E 2,5 - 8	796
06.600.2627.0	DIN 46228-E 2,5 -18	796
06.600.2727.0	DIN 46228-E 4 -10	796
06.600.2827.0	DIN 46228-E 4 -18	796
06.600.2927.0	DIN 46228-E 6 -12	796
06.600.3027.0	DIN 46228-E 6 -18	796
06.600.3127.0	DIN 46228-E10 -12	796
06.600.3227.0	DIN 46228-E10 -18	796
06.600.3327.0	DIN 46228-E16 -12	796
06.600.3427.0	DIN 46228-E16 -18	796
06.600.3527.0	DIN 46228-E25 -18	796
06.600.4027.0	DIN 46228-A 0,5 - 6	796
06.600.4127.0	DIN 46228-A 0,75- 6	796
06.600.4227.0	DIN 46228-A 1 - 6	796
06.600.4327.0	DIN 46228-A 1,5 - 7	796
06.600.4427.0	DIN 46228-A 2,5 - 7	796
06.600.4527.0	DIN 46228-A 4 - 9	796
06.600.4627.0	DIN 46228-A 6 -10	796
06.600.4727.0	DIN 46228-A10 -12	796
06.600.4827.0	DIN 46228-A16 -12	796
06.600.4927.0	DIN 46228-A25 -15	796
06.600.5027.0	IN 46228-A35 -18	796
07.201.4227.0	VB RFK 1 185 2	157
07.201.4327.0	VB RFK 1 185 3	157
07.201.4427.0	VB RFK 1 185 4	157
07.201.8227.0	VB RFK 1 240 2	159
07.201.8327.0	VB RFK 1 240 3	159
07.201.8427.0	VB RFK 1 240 4	159
07.205.1227.0	VB RFK 1 / 95 / 2 / 32	153
07.205.1327.0	VB RFK 1 / 95 / 3 / 32	153
07.205.1427.0	VB RFK 1 / 95 / 4 / 32	153
07.205.5227.0		154
07.205.5327.0		154
07.205.7227.0		154
07.205.7327.0		154
07.205.8227.0		155
07.205.8327.0		155

contents

Part no.	Type	section / page
07.205.9227.0		155
07.205.9327.0		155
07.250.0027.0		256
07.250.0227.0	VB 11/ 1 / 2	258
07.250.0327.0		258
07.250.0627.0	VB 11/ 1 / 6	258
07.250.1027.0	VB 11 / 1 / 12	258
07.250.1627.0	VERBINDUNGSKAMM #	256
07.250.2527.0	VB 11/ 2	218
07.250.3027.0	VERBINDUNGSKAMM	128
07.250.3127.0	VERBINDUNGSKAMM #	128
07.253.0027.0	VB 9786 M	259
07.253.0227.0	VB 9786 2	130
07.253.0327.0	VB 9786 3	130
07.253.0427.0	VB 9786 4	168
07.253.0627.0	VB 9786 6	130
07.255.0027.0	VB 0,5 WK 4..- M-70	168
07.255.0227.0	VB 0,5 WK 4..- 2	168
07.255.0327.0	VB 0,5 WK 4..- 3	168
07.255.0427.0	VB 0,5 WK 4..- 4	168
07.255.0527.0	VB 0,5 WK 4..- 5	168
07.255.0627.0	VB 0,5 WK 4..- 6	168
07.255.0727.0	VB 0,5 WK 4..- 7	168
07.255.0827.0	VB 0,5 WK 4..- 8	168
07.255.0927.0	VB 0,5 WK 4..- 9	168
07.255.1027.0	VB 0,5 WK 4..-10	168
07.255.1127.0	VB 0,5 WK 4..-11	168
07.255.1227.0	VB 0,5 WK 4..-12	168
07.255.2027.0	VB WK4 E M	168
07.255.2227.0	VB WK4 E - 2	168
07.255.2327.0	VB WK4 E - 3	168
07.255.2427.0	VB WK4 E - 4	168
07.255.2527.0	VB WK4 E - 5	168
07.255.2627.0	VB WK4 E - 6	168
07.255.2727.0	VB WK4 E - 7	168
07.255.2827.0	VB WK4 E - 8	168
07.255.2927.0	VB WK4 E - 9	168
07.255.3027.0	VB WK4 E - 10	168
07.255.3127.0	VB WK 4E - 11	168
07.255.3227.0	VB WK4 E - 12	168
07.255.4027.0	VB 1 WK 4..- M-70	168
07.255.4227.0	VB 1 WK 4..- 2	168
07.255.4327.0	VB 1 WK 4..- 3	168
07.255.4427.0	VB 1 WK 4..- 4	168
07.255.4527.0	VB 1 WK 4..- 5	168
07.255.4627.0	VB 1 WK 4..- 6	168
07.255.4727.0	VB 1 WK 4..- 7	168
07.255.4827.0	VB 1 WK 4..- 8	168
07.255.4927.0	VB 1 WK 4..- 9	168
07.255.5027.0	VB 1 WK 4..-10	168
07.255.5127.0	VB 1 WK 4..-11	168
07.255.5227.0	VB 1 WK 4..-12	168
07.256.4227.0	VBS WK4 E - 2	168
07.256.4327.0	VBS WK4 E - 3	168
07.256.4427.0	VBS WK4 E - 4	168
07.256.4527.0	VBS WK4 E - 5	168
07.256.4627.0	VBS WK4 E - 6	168
07.256.4727.0	VBS WK4 E - 7	168
07.256.4827.0	VBS WK4 E - 8	168
07.256.4927.0	VBS WK4 E - 9	168
07.256.5027.0	VBS WK4 E - 10	168
07.256.5127.0	VBS WK4 E - 11	168
07.256.5227.0	VBS WK4 E - 12	168
07.256.8027.0	VB 16 E / M	259
07.256.8227.0	VB 16 E / 2 POLIG	259
07.257.0227.0	VB WK2,5 KO - 2	120
07.257.0327.0	VB WK2,5 KO - 3	120
07.257.2027.0	VB WK2,5 KO - 20	120
07.300.2753.0	ZWISCHENPLATTE	374
07.300.4753.0	AP 8185 TOP N	349
07.310.3153.0	9701 / 6	190
07.310.3153.6	9701 / 6 BLAU	190
07.310.3253.0	9701 / 8	191
07.310.3253.6	9701 / 8 BLAU	191
07.310.3353.0	9701 / 12	191
07.310.3353.6	9701 / 12 BLAU	191
07.310.3453.0	9702 / 6	190
07.310.3453.6	9702 / 6 BLAU	190
07.310.3553.0	9702 / 8	191
07.310.3553.6	9702 / 8 BLAU	191
07.310.3653.0	9702 / 12	191
07.310.3653.6	9702 / 12 BLAU	191
07.310.3953.0	9701 / 10	191
07.310.3953.6	9701 / 10 BLAU	191
07.310.4053.0	9702 / 10	191
07.310.4053.6	9702 / 10 BLAU	191
07.310.4553.0	9701 / 6 ETK L	193
07.310.5253.0	9701 B / 8 ETK	193
07.310.5353.0	9701 B / 10 ETK	193
07.310.5855.0	9701 A/6 1S KO TP 2/V0	141
07.310.8453.0	ABSCHLUSSPLATTE	584
07.310.8553.0	ABSCHLUSSPLATTE	584
07.310.9355.0	AP 2,5-4 KO/V0	120
07.310.9455.0	TW 2,5-4 KO/V0	120
07.310.9653.0	ABSCHLUSSPLATTE	591

Part no.	Type	section / page
07.310.9853.0	AP 8113 SE	303
07.311.0155.0	AP 2,5 - 4 /V0	78
07.311.0155.6	AP 2,5 - 4 BL/V0	78
07.311.0255.0	AP 6 /V0	103
07.311.0255.6	AP 6 BL/V0	103
07.311.0653.0	APM 2,5 F. / 15	144
07.311.0753.0	APM 4 SL / 15	145
07.311.0853.0	APM 2,5 - 4 / 15	145
07.311.0853.6	APM 2,5 - 4 / 15 BLAU	145
07.311.1155.0	TW 2,5 - 4 /V0	78
07.311.1155.6	TW 2,5 - 4 BL/V0	78
07.311.1255.0	TW 6 /V0	103
07.311.1255.6	TW 6 BL/V0	103
07.311.1853.0	TWM 2,5 - 4 /15	145
07.311.1853.6	TW 2,5 - 4 /15 BLAU	145
07.311.2053.0		310
07.311.2053.8	TS 2,5 GELB	101
07.311.2053.8	TS 2,5 GELB	312
07.311.2153.8	TS 4 GELB	78
07.311.2253.8	TS 6 GELB	103
07.311.2353.8	TS 10 GELB	78
07.311.2453.8	TS 16 GELB	69
07.311.2853.8	TSM 2,5 / 15 GELB	144
07.311.2953.8	TS 4 / 15 GELB	112
07.311.3855.0	AP 4 3S 1K / V0	138
07.311.4055.0	AP 4 E /V0	114
07.311.4155.0	AP 10/SI /V0	125
07.311.4255.0	AP 4 S/V0	141
07.311.4355.0	AP 4 S / IW/V0	141
07.311.4455.0	AP 3 S/V0	140
07.311.4555.0	AP 3 S / IW/V0	140
07.311.4655.0	AP 5 S/V0	139
07.311.5055.0	TW 4 E /V0	114
07.311.6155.0	AP 4 TK /V0	122
07.311.6155.6	AP 4 TK BL /V0	123
07.311.6355.0	AP 4/D /V0	112
07.311.6355.6	AP 4/D BL /V0	112
07.311.6455.0	AP4 /D1 /2 /V0	112
07.311.6455.6		112
07.311.6555.0	API 4/2/V0	69
07.311.6655.0	APN 10 /V0	103
07.311.6655.6	APN 10 BL/V0	103
07.311.6755.0	APN 16 /V0	104
07.311.6755.6	APN 16 BL/V0	104
07.311.6855.0	API 4/3/V0	74
07.311.6955.0	TWI 4/V0	72
07.311.7655.0	TWN 10 /V0	103
07.311.7655.6	TWN 10 BL/V0	103
07.311.7755.0	TWN 16 /V0	104
07.311.7755.6	TWN 16 BL/V0	104
07.311.7855.0	TWN 35 /V0	105
07.311.7855.6	TWN 35 BL /V0	105
07.311.7955.0	TWN 70 /V0	105
07.311.7955.6	TWN 70 BL /V0	105
07.311.8155.0	TW 4 TK... /V0	122
07.311.8353.0	APIF 2,5	58
07.311.8453.8	TSN16 GELB	104
07.311.8553.8	TSN AD 16 GELB	104
07.311.8653.8	TSI 35 GELB	79
07.311.8855.0	API 35/V0	79
07.311.8855.6	API 35 BLAU/V0	79
07.311.9055.0	AP 2,5 U/D/8113 S/V/V0	134
07.311.9055.0	AP 2,5 U/D/8113 S/V/V0	312
07.311.9055.6	AP2,5U/D/8113 S/V BL/V0	313
07.311.9155.0	ZP 2,5 U/D/8113 S/V/V0	134
07.311.9155.0	ZP 2,5 U/D/8113 S/V/V0	312
07.311.9155.6	ZP2,5U/D/8113 S/V BL/V0	313
07.311.9455.0	API 10 - 16/V0	78
07.311.9455.6	API 10 - 16 BLAU/V0	78
07.311.9555.0	API 10 - 16 SL/V0	82
07.311.9853.0		137
07.311.9855.0	AP 2,5U/8113S/H/V0	311
07.312.0053.0	9701 / 6 SL	194
07.312.0153.0	9701 / 8 SL	194
07.312.0253.0	9701 / 10 SL	195
07.312.0353.0	9701 / 16 SL	189
07.312.0555.0	TW 2,5-4 K/U /V0	118
07.312.0855.0	APN 16ETK /V0	107
07.312.0955.0	APN 10ETK /V0	106
07.312.1155.0	APN 4ETK /V0	106
07.312.1255.0	TW 2,5-3 D/U /V0	118
07.312.1555.0	AP 2,5 U/8113 S/V /V0	136
07.312.1555.0	AP 2,5 U/8113 S/V /V0	310
07.312.1555.6	AP 2,5 U/8113 S/V BL/V0	137
07.312.1655.0	ZP 2,5 U/8113 S/V/V0	136
07.312.1655.0	ZP 2,5 U/8113 S/V/V0	310
07.312.1655.6	ZP 2,5 U/8113 S/V BL/V0	137
07.312.1655.6	ZP 2,5 U/8113 S/V BL/V0	311
07.312.1755.0	APN2,5E	116
07.312.1855.0	TWN2,5E	116
07.312.1955.0	API 10-16 ETK/1/V0	80
07.312.2153.0	APF 2,5 - 4	20
07.312.2153.6	APF 2,5 - 4 BLAU	20
07.312.2153.7	APF 2,5 - 4 GRUEN	22
07.312.2253.0	TWF 2,5 - 4	19

Part no.	Type	section / page
07.312.2253.6	TWF 2,5 - 4 BLAU	20
07.312.2353.0	APF 2,5/D 1/2	26
07.312.2353.6	APF 2,5/D 1/2 BLAU	26
07.312.2353.7	APF 2,5/D 1/2 GRUEN	28
07.312.2453.0	TWF 2,5/D 1/2	26
07.312.2453.6	TWF 2,5/D 1/2 BLAU	26
07.312.2553.0	APF 2,5/D 2/2	26
07.312.2553.6	APF 2,5/D 2/2 BLAU	26
07.312.2553.7	APF 2,5/D 2/2 GRUEN	28
07.312.2653.0	TWF 2,5/D 2/2	26
07.312.2653.6	TWF 2,5/D 2/2 BLAU	26
07.312.2853.0	APF 4 TK	38
07.312.3553.0	APF 1,5 E	33
07.312.3653.0	TWF 1,5 E	33
07.312.4153.0	APF 2,5/D2 /8113	36
07.312.4153.0	APF 2,5/D2 /8113	308
07.312.4153.6	APF 2,5/d2/8113 BLAU	36
07.312.4153.6	APF 2,5/d2/8113 BLAU	308
07.312.4353.0	APF 4 TK.	39
07.312.4655.0	AP 2,5U/8113../V0	136
07.312.4655.0	AP 2,5U/8113../V0	310
07.312.4753.0	WKF 1,5E/8113/35	37
07.312.4753.0	WKF 1,5E/8113/35	309
07.312.4853.0	APF4/D1/2	27
07.312.4853.6	APF4/D1/2 BLAU	27
07.312.4853.7	APF4/D1/2 GRUEN	29
07.312.4953.0	TWF 4/D1/2	27
07.312.4953.6	TWF 4/D1/2 BLAU	27
07.312.5053.0	AP 1 - 2,5	232
07.312.5053.6	AP 1 - 2,5 BLAU	232
07.312.5053.7	AP 1 - 2,5 GRUEN	233
07.312.5153.0	TW 1 - 2,5	232
07.312.5153.6	TW 1 - 2,5	232
07.312.5253.0	APC 1-2,5 D./TK.	234
07.312.5253.6	APC 1-2,5 D./TK. BLAU	234
07.312.5253.7	APC 1-2,5 D./TK.GRUEN	235
07.312.5353.0	TWC 1 - 2,5 D1.	234
07.312.5353.6	TWC 1 - 2,5 D1. BLAU	234
07.312.5453.0	APC 1-2,5 D2./E.	231
07.312.5453.6	APC 1-2,5 D 2./E. BLAU	236
07.312.5453.7	APC 1-2,5 D 2./E. GRUEN	237
07.312.5553.0	TWC 1 - 2,5 D2./ E	231
07.312.5553.6	TWC 1 - 2,5 D2./ E BLAU	236
07.312.5653.0	APF 4 NT	24
07.312.5753.0	APF 4 E	30
07.312.5753.7	APF 4 E GRUEN	31
07.312.5853.0	TWF 4 E	30
07.312.5953.0		40
07.312.6053.0		177
07.340.0353.0	TE / RFK 1 / 95 PA/V0	156
07.340.1053.0	TE/RFK 1/150-240 PA/V0	157
07.340.1153.0	TRENNWAND M.BEZ.	152
07.340.1353.0	TRENNWAND M.BEZ.	152
07.340.2153.0	BEZ.PLATTE	152
07.340.2353.0	BEZ.PLATTE	152
07.340.3553.0		154
07.340.3653.0		154
07.340.3753.0		155
07.340.4153.0	ABSCHLUSSPL.M.BEZ	152
07.340.4353.0	ABSCHLUSSPL.M.BEZ	152
07.409.7056.0	DECKEL	780
07.409.7156.0	DECKEL	780
07.409.7256.0	DECKEL	780
07.409.7356.0	DECKEL	780
07.413.3653.0	LOCHSTREIFEN	331
07.416.4553.0	WIEBOX CN 19 EP	594
07.416.4653.0	WIEBOX CN 22 EP	594
07.416.4753.0	WIEBOX CN 26 EP	595
07.416.4853.0	WIEBOX CN 19 FK	594
07.416.4856.0	WIEBOX CN 19 FKG	594
07.416.4953.0	WIEBOX CN 22 FK	594
07.416.4956.0	WIEBOX CN 22 FKG	594
07.416.5053.0	WIEBOX CN 26 FK	595
07.416.5056.0	WIEBOX CN 26 FKG	595
07.416.5153.0	WIEBOX CN DK	594
07.416.5253.0	WIEBOX CN DU	594
07.416.5353.0	WIEBOX CN 19 DK	594
07.416.5453.0	WIEBOX CN 19 DU	594
07.416.5653.0	WIEBOX CN 22 DK	594
07.416.5753.0	WIEBOX CN 22 DU	594
07.416.5853.0	WIEBOX CN 26 DK	595
07.416.5953.0	WIEBOX CN 26 DU	595
07.416.6353.0	REDUZIERPL. 24/6	784
07.416.6453.0	REDUZIERPL. 24/10	784
07.416.6553.0	REDUZIERPL. 24/16	784
07.416.6853.0	ABDECKPLATTE 6	784
07.416.6953.0	ABDECKPLATTE 10	784
07.416.7053.0	ABDECKPLATTE 16	784
07.416.7153.0	ABDECKPLATTE 24	784
07.417.6729.0	DECKEL	713
07.417.6753.0	DECKEL	713
07.417.6829.0	DECKEL M.DICHTUNG	713
07.417.6853.0		713
07.450.0187.0		267
07.450.2487.0		267

contents of part number

contents PART NUMBER

Part no.	Type	section / page
07.451.0180.0		267
07.451.2480.0	BZ KL 17 / 24	267
07.470.1380.0	UNTERLEGPLATTE	258
07.470.2256.0	LEITERHALTER	258
07.470.3256.0	LEITERHALTER	258
07.471.1380.0	UNTERLEGPLATTE	259
07.472.1380.0	UNTERLEGPLATTE	259
07.473.1380.0	UNTERLEGPLATTE	259
08.000.0106.0	X L= 1000 MIT SCHIRM	569
08.000.0106.1	X L= 1500 MIT SCHIRM	569
08.000.0106.2	X L= 2000 MIT SCHIRM	569
08.000.0106.3	X L= 2500 MIT SCHIRM	569
08.000.0106.4	X L= 3000 MIT SCHIRM	569
08.000.0106.5	X L= 3500 MIT SCHIRM	569
08.000.0106.6	X L= 4000 MIT SCHIRM	569
08.000.0106.7	X L= 4500 MIT SCHIRM	569
08.000.0106.8	X L= 5000 MIT SCHIRM	569
08.000.0106.9	X L= 6000 MIT SCHIRM	569
08.000.0107.0	X L= 7000 MIT SCHIRM	569
08.000.0107.1	X L= 8000 MIT SCHIRM	569
08.000.0107.2	X L= 9000 MIT SCHIRM	569
08.000.0107.3	X L=10000 MIT SCHIRM	569
08.000.0107.4	X L= 1000 OHNE SCHIRM	569
08.000.0107.5	X L= 1500 OHNE SCHIRM	569
08.000.0107.6	X L= 2000 OHNE SCHIRM	569
08.000.0107.7	X L= 2500 OHNE SCHIRM	569
08.000.0107.8	X L= 3000 OHNE SCHIRM	569
08.000.0108.0	X L= 4000 OHNE SCHIRM	569
08.000.0108.1	X L= 4500 OHNE SCHIRM	569
08.000.0108.2	X L= 5000 OHNE SCHIRM	569
08.000.0108.3	X L= 6000 OHNE SCHIRM	569
08.000.0108.4	X L= 7000 OHNE SCHIRM	569
08.000.0108.5	X L= 8000 OHNE SCHIRM	569
08.000.0108.6	X L= 9000 OHNE SCHIRM	569
08.000.0108.7	X L=10000 OHNE SCHIRM	569
08.000.0108.9	Y BANDBREITE BIS 8M	569
14.100.0170.0	547	261
14.100.0270.0	548	261
14.100.0370.0	549	261
14.200.0270.0	1032	262
14.200.0370.0	1033	262
14.200.0470.0	1033 A	262
14.200.1270.0	1032 M 3.5	262
14.200.1370.0	1033 M 3.5	262
14.200.1470.0	1033 A M 3.5	262
14.201.0270.0	1032 DS	262
14.201.0370.0	1033 DS	262
14.201.0470.0	1033 A DS	262
14.210.0270.0	2 DIN 46284 ST	262
14.210.0370.0	3 DIN 46284 ST	262
14.211.0270.0	2 D DIN 46284 ST	262
14.211.0370.0	3 D DIN 46284 ST	262
14.220.0270.0	1031	262
14.220.0370.0	1029	262
14.230.0270.0	1027	262
14.290.0440.0	1033 AP KR	262
14.291.0440.0	1033 AP DS KR	262
15.000.0253.0	8105 B / 2 C0 OB	382
15.000.0353.0	8105 B / 3 C0 OB	382
15.000.0453.0	8105 B / 4 C0 OB	382
15.000.0553.0	8105 B / 5 C0 OB	382
15.000.0653.0	8105 B / 6 C0 OB	382
15.000.0753.0	8105 B / 7 C0 OB	382
15.001.0253.0	8105 B / 2 C1 OB	382
15.001.0353.0	8105 B / 3 C1 OB	382
15.001.0453.0	8105 B / 4 C1 OB	382
15.001.0553.0	8105 B / 5 C1 OB	382
15.001.0653.0	8105 B / 6 C0 OB	382
15.001.0753.0	8105 B / 7 C1 OB	382
15.002.0253.0	8105 B / 2 C2 OB	382
15.002.0353.0	8105 B / 3 C2 OB	382
15.002.0453.0	8105 B / 4 C2 OB	382
15.002.0553.0	8105 B / 5 C2 OB	382
15.002.0653.0	8105 B / 6 C2 OB GR	382
15.002.0753.0	8105 B / 7 C2 OB	382
15.003.0253.0	8105 B / 2 C3 OB	382
15.003.0353.0	8105 B / 3 C3 OB	382
15.003.0453.0	8105 B / 4 C3 OB	382
15.004.0253.0	8105 B / 2 C4 OB	382
15.004.0353.0	8105 B / 3 C4 OB	382
15.004.0453.0	8105 B / 4 C4 OB	382
15.005.0253.0	8105 B / 2 C5 OB	382
15.005.0353.0	8105 B / 3 C5 OB	382
15.005.0453.0	8105 B / 4 C5 OB	382
15.006.0253.0	8105 B / 2 C6 OB	382
15.006.0353.0	8105 B / 3 C6 OB GR	382
15.006.0453.0	8105 B / 4 C6 OB	382
15.007.0253.0	8105 B / 2 C7 OB	382
15.007.0353.0	8105 B / 3 C7 OB	382
15.010.0253.0	8105 B / 2 C0 VL OB	383
15.010.0353.0	8105 B / 3 C0 VL OB	383
15.010.0453.0	8105 B / 4 C0 VL OB	383
15.010.0553.0	8105 B / 5 C0 VL OB	383
15.010.0653.0	8105 B / 6 C0 VL OB	383
15.010.0753.0	8105 B / 7 C0 VL OB	383
15.011.0253.0	8105 B / 2 C1 VL OB GR	383
15.011.0353.0	8105 B / 3 C1 VL OB	383
15.011.0453.0	8105 B / 4 C1 VL OB	383
15.011.0553.0	8105 B / 5 C1 VL OB	383
15.011.0653.0	8105 B / 6 C1 VL OB	383
15.011.0753.0	8105 B / 7 C1 VL OB	383
15.012.0253.0	8105 B / 2 C2 VL OB GR	383
15.012.0353.0	8105 B / 3 C2 VL OB GR	383
15.012.0453.0	8105 B / 4 C2 VL OB	383
15.012.0553.0	8105 B / 5 C2 VL OB	383
15.012.0653.0	8105 B / 6 C2 VL OB	383
15.012.0753.0	8105 B / 7 C2 VL OB	383
15.013.0253.0	8105 B / 2 C3 VL OB	383
15.013.0353.0	8105 B / 3 C3 VL OB	383
15.013.0453.0	8105 B / 4 C3 VL OB	383
15.014.0253.0	8105 B / 2 C4 VL OB	383
15.014.0353.0	8105 B / 3 C4 VL OB	383
15.014.0453.0	8105 B / 4 C4 VL OB	383
15.015.0253.0	8105 B / 2 C5 VL OB	383
15.015.0353.0	8105 B / 3 C5 VL OB	383
15.015.0453.0	8105 B / 4 C5 VL OB	383
15.016.0253.0	8105 B / 2 C6 OB	383
15.016.0353.0	8105 B / 3 C6 OB	383
15.016.0453.0	8105 B / 4 C6 VL OB	383
15.017.0253.0	8105 B / 2 C7 VL OB	383
15.017.0353.0	8105 B / 3 C7 VL OB	383
15.020.0253.0	8105 B / 2 C0 VR OB	382
15.020.0353.0	8105 B / 3 C0 VR OB	382
15.020.0453.0	8105 B / 4 C0 VR OB	382
15.020.0553.0	8105 B / 5 C0 VR OB	382
15.020.0653.0	8105 B / 6 C0 VR OB	382
15.020.0753.0	8105 B / 7 C0 VR OB	382
15.021.0253.0	8105 B / 2 C1 VR OB	382
15.021.0353.0	8105 B / 3 C1 VR OB	382
15.021.0453.0	8105 B / 4 C1 VR OB GR	382
15.021.0553.0	8105 B / 5 C1 VR OB	382
15.021.0653.0	8105 B / 6 C1 VR OB	382
15.021.0753.0	8105 B / 7 C1 VR OB	382
15.022.0253.0	8105 B / 2 C2 VR OB GR	382
15.022.0353.0	8105 B / 3 C2 VR OB GR	382
15.022.0453.0	8105 B / 4 C2 VR OB	382
15.022.0553.0	8105 B / 5 C2 VR OB	382
15.022.0653.0	8105 B / 6 C2 VR OB	382
15.022.0753.0	8105 B / 7 C2 VR OB	382
15.023.0253.0	8105 B / 2 C3 VR OB	382
15.023.0353.0	8105 B / 3 C3 VR OB GR	382
15.023.0453.0	8105 B / 4 C3 VR OB	382
15.024.0253.0	8105 B / 2 C4 VR OB GR	382
15.024.0353.0	8105 B / 3 C4 VR OB GR	382
15.024.0453.0	8105 B / 4 C4 VR OB GR	382
15.025.0253.0	8105 / B 2 C5 VR OB	382
15.025.0353.0	8105 B / 3 C5 VR OB GR	382
15.025.0453.0	8105 B / 4 C5 VR OB GR	382
15.026.0253.0	8105 B / 2 C6 VR OB	382
15.026.0353.0	8105 B / 3 C6 VR OB	382
15.026.0453.0	8105 B / 4 C6 VR OB	382
15.027.0253.0	8105 B / 2 C7 VR OB GR	382
15.027.0353.0	8105 B / 3 C7 VR OB	382
15.301.0258.9	8105 F / 2 G C1 OB NT	383
15.301.0358.9	8105 F / 3 G C1 OB NT	383
15.301.0458.9	8105 F / 4 G C1 OB NT	383
15.301.0558.9	8105 F / 5 G C1 OB NT	383
15.301.0658.9	8105 F / 6 G C1 OB NT	383
15.301.0758.9	8105 F / 7 G C1 OB NT	383
15.302.0258.9	8105 F / 2 G C2 OB NT	383
15.302.0358.9	8105 F / 3 G C2 OB NT	383
15.302.0458.9	8105 F / 4 G C2 OB NT	383
15.302.0558.9	8105 F / 5 G C2 OB NT	383
15.302.0658.9	8105 F / 6 G C2 OB NT	383
15.302.0758.9	8105 F / 7 G C2 OB NT	383
15.303.0258.9	8105 F / 2 G C3 OB NT	383
15.303.0358.9	8105 F / 3 G C3 OB NT	383
15.303.0458.9	8105 F / 4 G C3 OB NT	383
15.304.0258.9	8105 F / 2 G C4 OB NT	383
15.304.0358.9	8105 F / 3 G C4 OB NT	383
15.304.0458.9	8105 F / 4 G C4 OB NT	383
15.305.0258.9	8105 F / 2 G C5 OB NT	383
15.305.0358.9	8105 F / 3 G C5 OB NT	383
15.305.0458.9	8105 F / 4 G C5 OB NT	383
15.306.0258.9	8105 F / 2 G C6 OB NT	383
15.306.0358.9	8105 F / 3 G C6 OB NT	383
15.306.0458.9	8105 F / 4 G C6 OB NT	383
15.307.0258.9	8105 F / 2 G C7 OB NT	383
15.307.0358.9	8105 F / 3 G C7 OB NT	383
15.311.0258.9	8105 F / 2 W C1 OB NT	383
15.311.0358.9	8105 F / 3 W C1 OB NT	383
15.311.0458.9	8105 F / 4 W C1 OB NT	383
15.311.0558.9	8105 F / 5 W C1 OB NT	383
15.311.0658.9	8105 F / 6 W C1 OB NT	383
15.311.0758.9	8105 F / 7 W C1 OB NT	383
15.312.0258.9	8105 F / 2 W C2 OB NT	383
15.312.0358.9	8105 F / 3 W C2 OB NT	383
15.312.0458.9	8105 F / 4 W C2 OB NT	383
15.312.0558.9	8105 F / 5 W C2 OB NT	383
15.312.0658.9	8105 F / 6 W C2 OB NT	383
15.312.0758.9	8105 F / 7 W C2 OB NT	383
15.313.0258.9	8105 F / 2 W C3 OB NT	383
15.313.0358.9	8105 F / 3 W C3 OB NT	383
15.313.0458.9	8105 F / 4 W C3 OB NT	383
15.314.0258.9	8105 F / 2 W C4 OB NT	383
15.314.0358.9	8105 F / 3 W C4 OB NT	383
15.314.0458.9	8105 F / 4 W C4 OB NT	383
15.315.0258.9	8105 F / 2 W C5 OB NT	383
15.315.0358.9	8105 F / 3 W C5 OB NT	383
15.315.0458.9	8105 F / 4 W C5 OB NT	383
15.316.0258.9	8105 F / 2 W C6 OB NT	383
15.316.0358.9	8105 F / 3 W C6 OB NT	383
15.316.0458.9	8105 F / 4 W C6 OB NT	383
15.317.0258.9	8105 F / Z W C7 OB NT	383
15.317.0358.9	8105 F / 3 W C7 OB NT	383
15.800.8856.0		391
15.800.9956.0		389
19.230.0040.0	KS0 11 / 1 Z KR	216
21.304.0153.0	4E / 1	257
21.304.0253.0	4E / 2	257
21.304.0353.0	4E / 3	257
21.304.0453.0	4E / 4	257
21.304.0553.0	4E / 5	257
21.304.0653.0	4E / 6	257
21.304.0753.0	4E / 7	257
21.304.0853.0	4E / 8	257
21.304.0953.0	4E / 9	257
21.304.1053.0	4E / 10	257
21.304.1153.0	4E / 11	257
21.304.1253.0	4E	257
21.305.0153.0	4E / 1 DS	257
21.305.0253.0	4E / 2 DS	257
21.305.0353.0	4E / 3 DS	257
21.305.0453.0	4E / 4 DS	257
21.305.0553.0	4E / 5 DS	257
21.305.0653.0	4E / 6 DS	257
21.305.0753.0	4E / 7 DS	257
21.305.0853.0	4E / 8 DS	257
21.305.0953.0	4E / 9 DS	257
21.305.1053.0	4E / 10 DS	257
21.305.1153.0	4E / 11 DS	257
21.305.1253.0	4E DS	257
21.310.0153.0	6E / 1	258
21.310.0253.0	6E / 2	258
21.310.0353.0	6E / 3	258
21.310.0453.0	6E / 4	258
21.310.0553.0	MMLEISTE6E / 5	258
21.310.0653.0	6E / 6	258
21.310.0753.0	6E / 7	258
21.310.0853.0	6E / 8	258
21.310.0953.0	6E / 9	258
21.310.1053.0	6E / 10	258
21.310.1253.0	6E	258
21.311.0153.0	6E / 1 DS	258
21.311.0253.0	6E / 2 DS	258
21.311.0353.0	6E / 3 DS	258
21.311.0453.0	6E / 4 DS	258
21.311.0553.0	6E / 5 DS	258
21.311.0653.0	6E / 6 DS	258
21.311.0753.0	6E / 7 DS	258
21.311.0853.0	6E / 8 DS	258
21.311.0953.0	6E / 9 DS	258
21.311.1053.0	6E / 10 DS	258
21.311.1253.0	6E DS	258
21.312.0153.0	6E H / 1	257
21.312.0253.0	6E H / 2	257
21.312.0353.0	6E H / 3	257
21.312.0453.0	6E H / 4	257
21.312.0553.0	6E H / 5	257
21.312.0653.0	6E H / 6	257
21.312.0753.0	6E H / 7	257
21.312.0853.0	6E H / 8	257
21.312.0953.0	6E H / 9	257
21.312.1053.0	6E H / 10	257
21.312.1153.0	6E H / 11	257
21.312.1253.0	6E H	257
21.313.0153.0	6E H / 1 DS	257
21.313.0253.0	6E H / 2 DS	257
21.313.0353.0	6E H / 3 DS	257
21.313.0453.0	6E H / 4 DS	257
21.313.0553.0	6E H / 5 DS	257
21.313.0653.0	6E H / 6 DS	257
21.313.0753.0	6E H / 7 DS	257
21.313.0853.0	6E H / 8 DS	257
21.313.0953.0	6E H / 9 DS	257
21.313.1053.0	6E H / 10 DS	257
21.313.1153.0	6E H / 11 DS	257
21.313.1253.0	6E H DS	257
21.330.5153.0	10E / 1	259
21.330.5253.0	10E / 2	259
21.330.5353.0	10E / 3	259
21.330.5453.0	10E / 4	259
21.330.5553.0	10E / 5	259
21.330.5653.0	10E / 6	259
21.330.5753.0	10E / 7	259

contents

Part no.	Type	section / page
21.330.5853.0	10E / 8	259
21.330.5953.0	10E / 9	259
21.330.6053.0	10E / 10	259
21.330.6253.0	10E	259
21.331.5153.0	10E / 1 DS	259
21.331.5253.0	10E / 2 DS	259
21.331.5353.0	10E / 3 DS	259
21.331.5453.0	10E / 4 DS	259
21.331.5553.0	10E / 5 DS	259
21.331.5653.0	10E / 6 DS	259
21.331.5753.0	10E / 7 DS	259
21.331.5853.0	10E / 8 DS	259
21.331.5953.0	10E / 9 DS	259
21.331.6053.0	10E / 10 DS	259
21.331.6253.0	10E DS	259
21.340.3153.0	20E / 1	259
21.340.3253.0	20E / 2	259
21.340.3353.0	20E / 3	259
21.340.3453.0	20E / 4	259
21.340.3553.0	20E / 5	259
21.340.3653.0	20E / 6	259
21.340.3753.0	20E / 7	259
21.340.3853.0	20E / 8	259
21.340.3953.0	20E / 9	259
21.340.4053.0	20E / 10	259
21.340.4253.0	20E	259
21.340.5153.0	16E / 1	259
21.340.5253.0	16E / 2	259
21.340.5353.0	16E / 3	259
21.340.5453.0	16E / 4	259
21.340.5553.0	16E / 5	259
21.340.5653.0	16E / 6	259
21.340.5753.0	16E / 7	259
21.340.5853.0	16E / 8	259
21.340.5953.0	16E / 9	259
21.340.6053.0	16E / 10	259
21.340.6253.0	16E	259
21.341.3153.0	20E / 1 DS	259
21.341.3253.0	20E / 2 DS	259
21.341.3353.0	20E / 3 DS	259
21.341.3453.0	20E / 4 DS	259
21.341.3553.0	20E / 5 DS	259
21.341.3653.0	20E / 6 DS	259
21.341.3753.0	20E / 7 DS	259
21.341.3853.0	20E / 8 DS	259
21.341.3953.0	20E / 9 DS	259
21.341.4053.0	20E / 10 DS	259
21.341.4253.0	20E DS	259
21.341.5153.0	16E / 1 DS	259
21.341.5253.0	16E / 2 DS	259
21.341.5353.0	16E / 3 DS	259
21.341.5453.0	16E / 4 DS	259
21.341.5553.0	16E / 5 DS	259
21.341.5653.0	16E / 6 DS	259
21.341.5753.0	16E / 7 DS	259
21.341.5853.0	16E / 8 DS	259
21.341.5953.0	16E / 9 DS	259
21.341.6053.0	16E / 10 DS	259
21.341.6253.0	16E DS	259
22.310.0153.0	6ES / 1	258
22.310.0253.0	6ES / 2	258
22.310.0353.0	6ES / 3	258
22.310.0453.0	6ES / 4	258
22.310.0553.0	6ES / 5	258
22.310.0653.0	6ES / 6	258
22.310.0753.0	6ES / 7	258
22.310.0853.0	6ES / 8	258
22.310.0953.0	6ES / 9	258
22.310.1053.0	6ES / 10	258
22.310.1253.0	6ES	258
25.000.0256.0	LPST 1 / 2	330
25.000.0356.0	LPST 1 / 3	330
25.000.0456.0	LPST 1 / 4	330
25.000.0556.0	LPST 1 / 5	330
25.000.0656.0	LPST 1 / 6	330
25.000.0756.0	LPST 1 / 7	330
25.000.0856.0	LPST 1 / 8	330
25.000.0956.0	LPST 1 / 9	330
25.000.1056.0	LPST 1 / 10	330
25.000.1156.0	LPST 1 / 11	330
25.000.1256.0	LPST 1 / 12	330
25.000.1356.0	LPST 1 / 13	330
25.000.1456.0	LPST 1 / 14	330
25.000.1556.0	LPST 1 / 15	330
25.000.1656.0	LPST 1 / 16	330
25.001.0256.0	LPSTL 1 / 2	330
25.001.0356.0	LPSTL 1 / 3	330
25.001.0456.0	LPSTL 1 / 4	330
25.001.0556.0	LPSTL 1 / 5	330
25.001.0656.0	LPSTL 1 / 6	330
25.001.0756.0	LPSTL 1 / 7	330
25.001.0856.0	LPSTL 1 / 8	330
25.001.0956.0	LPSTL 1 / 9	330
25.001.1056.0	LPSTL 1 / 10	330
25.001.1156.0	LPSTL 1 / 11	330
25.001.1256.0	LPSTL 1 / 12	330
25.001.1356.0	LPSTL 1 / 13	330
25.001.1456.0	LPSTL 1 / 14	330
25.001.1556.0	LPSTL 1 / 15	330
25.001.1656.0	LPSTL 1 / 16	330
25.002.0253.0	DST85/ 2	328
25.002.0353.0	DST85/ 3	328
25.002.0453.0	DST85/ 4	328
25.002.0553.0	DST85/ 5	328
25.002.0653.0	DST85/ 6	328
25.002.0753.0	DST85/ 7	328
25.002.0853.0	DST85/ 8	328
25.002.0953.0	DST85/ 9	328
25.002.1053.0	DST85/10	328
25.002.1153.0	DST85/11	328
25.002.1253.0	DST85/12	328
25.003.0253.0	DST85/ 2 OB	328
25.003.0353.0	DST85/ 3 OB	328
25.003.0453.0	DST85/ 4 OB	328
25.003.0553.0	DST85/ 5 OB	328
25.003.0653.0	DST85/ 6 OB	328
25.003.0753.0	DST85/ 7 OB	328
25.003.0853.0	DST85/ 8 OB	328
25.003.0953.0	DST85/ 9 OB	328
25.003.1053.0	DST85/10 OB	328
25.003.1153.0	DST85/11 OB	328
25.003.1253.0	DST85/12 OB	328
25.004.0253.0	DSTLF85/ 2	328
25.004.0353.0	DSTLF85/ 3	328
25.004.0453.0	DSTLF85/ 4	328
25.004.0553.0	DSTLF85/ 5	328
25.004.0653.0	DSTLF85/ 6	328
25.004.0753.0	DSTLF85/ 7	328
25.004.0853.0	DSTLF85/ 8	328
25.004.0953.0	DSTLF85/ 9	328
25.004.1053.0	DSTLF85/10	328
25.004.1153.0	DSTLF85/11	328
25.004.1253.0	DSTLF85/12	328
25.005.0253.0	DSTLF85/ 2 OB	328
25.005.0353.0	DSTLF85/ 3 OB	328
25.005.0453.0	DSTLF85/ 4 OB	328
25.005.0553.0	DSTLF85/ 5 OB	328
25.005.0653.0	DSTLF85/ 6 OB	328
25.005.0753.0	DSTLF85/ 7 OB	328
25.005.0853.0	DSTLF85/ 8 OB	328
25.005.0953.0	DSTLF85/ 9 OB	328
25.005.1053.0	DSTLF85/10 OB	328
25.005.1153.0	DSTLF85/11 OB	328
25.005.1253.0	DSTLF85/12 OB	328
25.010.0256.0	LPST 1 / 2 OB	330
25.010.0356.0	LPST 1 / 3 OB	330
25.010.0456.0	LPST 1 / 4 OB	330
25.010.0556.0	LPST 1 / 5 OB	330
25.010.0656.0	LPST 1 / 6 OB	330
25.010.0756.0	LPST 1 / 7 OB	330
25.010.0856.0	LPST 1 / 8 OB	330
25.010.0956.0	LPST 1 / 9 OB	330
25.010.1056.0	LPST 1 / 10 OB	330
25.010.1156.0	LPST 1 / 11 OB	330
25.010.1256.0	LPST 1 / 12 OB	330
25.010.1356.0	LPST 1 / 13 OB	330
25.010.1456.0	LPST 1 / 14 OB	330
25.010.1556.0	LPST 1 / 15 OB	330
25.010.1656.0	LPST 1 / 16 OB	330
25.130.0253.0	8190 / 2	358
25.130.0353.0	8190 / 3	358
25.130.0453.0	8190 / 4	358
25.130.0553.0	8190 / 5	358
25.130.0653.0	8190 / 6	358
25.130.0753.0	8190 / 7	358
25.130.0853.0	8190 / 8	358
25.130.0953.0	8190 / 9	358
25.130.1053.0	8190 / 10	358
25.130.1153.0	8190 / 11	358
25.130.1253.0	8190 / 12	358
25.130.1353.0	8190 / 13	358
25.130.1453.0	8190 / 14	358
25.130.1553.0	8190 / 15	358
25.130.1653.0	8190 / 16	358
25.130.3253.0	8190 E / 2 / 4	368
25.130.3353.0	8190 E / 3 / 6	368
25.130.3453.0	8190 E / 4 / 8	368
25.130.3553.0	8190 E / 5 / 10	368
25.130.3653.0	8190 E / 6 / 12	368
25.130.3753.0	8190 E / 7 / 14	368
25.130.3853.0	8190 E / 8 / 16	368
25.130.3953.0	8190 E / 9 / 18	368
25.130.4053.0	8190 E / 10 / 20	368
25.130.4153.0	8190 E / 11 / 22	368
25.130.4253.0	8190 E / 12 / 24	368
25.131.0253.0	8190 / 2 OB	358
25.131.0353.0	8190 / 3 OB	358
25.131.0453.0	8190 / 4 OB	358
25.131.0553.0	8190 / 5 OB	358
25.131.0653.0	8190 / 6 OB	358
25.131.0753.0	8190 / 7 OB	358
25.131.0853.0	8190 / 8 OB	358
25.131.0953.0	8190 / 9 OB	358
25.131.1053.0	8190 / 10 OB	358
25.131.1153.0	8190 / 11 OB	358
25.131.1253.0	8190 / 12 OB	358
25.131.1353.0	8190 / 13 OB	358
25.131.1453.0	8190 / 14 OB	358
25.131.1553.0	8190 / 15 OB	358
25.131.1653.0	8190 / 16 OB	358
25.131.3253.0	8190 E / 2 / 4 OB	368
25.131.3353.0	8190 E / 3 / 6 OB	368
25.131.3453.0	8190 E / 4 / 8 OB	368
25.131.3553.0	8190 E / 5 / 10 OB	368
25.131.3653.0	8190 E / 6 / 12 OB	368
25.131.3753.0	8190 E / 7 / 14 OB	368
25.131.3853.0	8190 E / 8 / 16 OB	368
25.131.3953.0	8190 E / 9 / 18 OB	368
25.131.4053.0	8190 E / 10 / 20 OB	368
25.131.4153.0	8190 E / 11 / 22 OB	368
25.131.4253.0	8190 E / 12 / 24 OB	368
25.132.0253.0	8190 / 4 / 2	358
25.132.0353.0	8190 / 6 / 3	358
25.132.0453.0	8190 / 8 / 4	358
25.132.0553.0	8190 / 10 / 5	358
25.132.0653.0	8190 / 12 / 6	358
25.132.0753.0	8190 / 14 / 7	358
25.132.0853.0	8190 / 16 / 8	358
25.132.0953.0	8190 / 18 / 9	358
25.132.1053.0	8190 / 20 / 10	358
25.132.1153.0	8190 / 22 / 11	358
25.132.1253.0	8190 / 24 / 12	358
25.133.0253.0	8190 / 4 / 2 OB	358
25.133.0353.0	8190 / 6 / 3 OB	358
25.133.0453.0	8190 / 8 / 4 OB	358
25.133.0553.0	8190 / 10 / 5 OB	358
25.133.0653.0	8190 / 12 / 6 OB	358
25.133.0753.0	8190 / 14 / 7 OB	358
25.133.0853.0	8190 / 16 / 8 OB	358
25.133.0953.0	8190 / 18 / 9 OB	358
25.133.1053.0	8190 / 20 / 10 OB	358
25.133.1153.0	8190 / 22 / 11 OB	358
25.133.1253.0	8190 / 24 / 12 OB	358
25.150.0253.0	8390 / 2	359
25.150.0353.0	8390 / 3	359
25.150.0453.0	8390 / 4	359
25.150.0553.0	8390 / 5	359
25.150.0653.0	8390 / 6	359
25.150.0753.0	8390 / 7	359
25.150.0853.0	8390 / 8	359
25.150.0953.0	8390 / 9	359
25.150.1053.0	8390 / 10	359
25.150.1153.0	8390 / 11	359
25.150.1253.0	8390 / 12	359
25.151.0253.0	8390 / 2 OB	359
25.151.0353.0	8390 / 3 OB	359
25.151.0453.0	8390 / 4 OB	359
25.151.0553.0	8390 / 5 OB	359
25.151.0653.0	8390 / 6 OB	359
25.151.0753.0	8390 / 7 OB	359
25.151.0853.0	8390 / 8 OB	359
25.151.0953.0	8390 / 9 OB	359
25.151.1053.0	8390 / 10 OB	359
25.151.1153.0	8390 / 11 OB	359
25.151.1253.0	8390 / 12 OB	359
25.153.0253.0	8195 D/ 2/ 6	372
25.153.0353.0	8195 D/ 3/ 9	372
25.153.0453.0	8195 D/ 4/12	372
25.153.0553.0	8195 D/ 5/15	372
25.153.0653.0	8195 D/ 6/18	372
25.153.0753.0	8195 D/ 7/21	372
25.153.0853.0	8195 D/ 8/24	372
25.153.0953.0	8195 D/ 9/27	372
25.153.1053.0	8195 D/ 10/30	372
25.153.2253.0	8195 D/ 2/ 6 OB	372
25.153.2353.0	8195 D/ 3/ 9 OB	372
25.153.2453.0	8195 D/ 4/12 OB	372
25.153.2553.0	8195 D/ 5/15 OB	372
25.153.2653.0	8195 D/ 6/18 OB	372
25.153.2753.0	8195 D/ 7/21 OB	372
25.153.2853.0	8195 D/ 8/24 OB	372
25.153.2953.0	8195 D/ 9/27 OB	372
25.153.3053.0	8195 D/ 10/30 OB	372
25.153.4253.0	8195 D/ 2/ 6 VB1	372
25.153.4353.0	8195 D/ 3/ 9 VB1	372
25.153.4453.0	8195 D/ 4/12 VB1	372
25.153.4553.0	8195 D/ 5/15 VB1	372
25.153.4653.0	8195 D/ 6/18 VB1	372
25.153.4753.0	8195 D/ 7/21 VB1	372
25.153.4853.0	8195 D/ 8/24 VB1	372
25.153.4953.0	8195 D/ 9/27 VB1	372
25.153.5053.0	8195 D/ 10/30 VB1	372
25.153.6253.0	8195 D/ 2/ 6 VB1 OB	372
25.153.6353.0	8195 D/ 3/ 9 VB1 OB	372
25.153.6453.0	8195 D/ 4/12 VB1 OB	372

contents of part number

contents PART NUMBER

Part no.	Type	section / page
25.153.6553.0	8195 D/ 5/15 VB1 OB	372
25.153.6653.0	8195 D/ 6/18 VB1 OB	372
25.153.6753.0	8195 D/ 7/21 VB1 OB	372
25.153.6853.0	8195 D/ 8/24 VB1 OB	372
25.153.6953.0	8195 D/ 9/27 VB1 OB	372
25.153.7053.0	8195 D/ 10/30 VB1 OB	372
25.154.0253.0	8195 V/ 2/ 8	373
25.154.0353.0	8195 v/ 3/12	373
25.154.0453.0	8195 V/ 4/16	373
25.154.0553.0	8195 V/ 5/20	373
25.154.0653.0	8195 V/ 6/24	373
25.154.0753.0	8195 V/ 7/28	373
25.154.0853.0	8195 V/ 8/32	373
25.154.0953.0	8195 V/ 9/36	373
25.154.1053.0	8195 V/ 10/40	373
25.154.2253.0	8195 V/ 2/ 8 OB	373
25.154.2353.0	81195 V/ 3/12 OB	373
25.154.2453.0	8195 V/ 4/16 OB	373
25.154.2553.0	8195 V/ 5/20 OB	373
25.154.2653.0	8195 V/ 6/24 OB	373
25.154.2753.0	8195 V/ 7/28 OB	373
25.154.2853.0	8195 V/ 8/32 OB	373
25.154.2953.0	8195 V/ 9/36 OB	373
25.154.3053.0	8195 V/ 10/40 OB	373
25.154.4253.0	8195 V/ 2/ 8 VB1	373
25.154.4353.0	8195 V/ 3/12 VB1	373
25.154.4453.0	8195 V/ 4/16 VB1	373
25.154.4553.0	8195 V/ 5/20 VB1	373
25.154.4653.0	8195 V/ 6/24 VB1	373
25.154.4753.0	8195 V/ 7/28 VB1	373
25.154.4853.0	8195 V/ 8/32 VB1	373
25.154.4953.0	8195 V/ 9/36 VB1	373
25.154.5053.0	8195 V/ 10/40 VB1	373
25.154.6253.0	8195 V/ 2/ 8 VB1 OB	373
25.154.6353.0	8195 V/ 3/12 VB1 OB	373
25.154.6453.0	8195 V/ 4/16 VB1 OB	373
25.154.6553.0	8195 V/ 5/20 VB1 OB	373
25.154.6653.0	8195 V/ 6/24 VB1 OB	373
25.154.6753.0	8195 V/ 7/28 VP1 OB	373
25.154.6853.0	8195 V/ 8/32 VB1 OB	373
25.154.6953.0	8195 V/ 9/36 VB1 OB	373
25.154.7053.0	8591 V/ 10/40 VB1 OB	373
25.155.0253.0	8191 R / 2 Z OB	342
25.155.0353.0	8191 R / 3 Z OB	342
25.155.0453.0	8191 R / 4 Z OB	342
25.155.0553.0	8191 R / 5 Z OB	342
25.155.0653.0	8191 R / 6 Z OB	342
25.155.0753.0	8191 R / 7 Z OB	342
25.155.0853.0	8191 R / 8 Z OB	342
25.155.0953.0	8191 R / 9 Z OB	342
25.155.1053.0	8191 R / 10 Z OB	342
25.155.1153.0	8191 R / 11 Z OB	342
25.155.1253.0	8191 R / 12 Z OB	342
25.155.1353.0	8191 R / 13 Z OB	342
25.155.1453.0	8191 R / 14 Z OB	342
25.155.2253.0	8191 R / 2 Z	342
25.155.2353.0	8191 R / 3 Z	342
25.155.2453.0	8191 R / 4 Z	342
25.155.2553.0	8191 R / 5 Z	342
25.155.2653.0	8191 R / 6 Z	342
25.155.2753.0	8191 R / 7 Z	342
25.155.2853.0	8191 R / 8 Z	342
25.155.2953.0	8191 R / 9 Z	342
25.155.3053.0	8191 R / 10 Z	342
25.155.3153.0	8191 R / 11 Z	342
25.155.3253.0	8191 R / 12 Z	342
25.155.3353.0	8191 R / 13 Z	342
25.155.3453.0	8191 R / 14 Z	342
25.156.0253.0	8291 R / 2 Z OB	342
25.156.0353.0	8291 R / 3 Z OB	342
25.156.0453.0	8291 R/ 4 Z OB	342
25.156.0553.0	8291 R / 5 Z OB	342
25.156.0653.0	8291 R / 6 Z OB	342
25.156.0753.0	8291 R / 7 Z OB	342
25.156.0853.0	8291 R / 8 Z OB	342
25.156.0953.0	8291 R / 9 Z OB	342
25.156.1053.0	8291 R / 10 Z OB	342
25.156.1153.0	8291 R / 11 Z OB	342
25.156.1253.0	8291 R / 12 Z OB	342
25.156.1353.0	8291 R / 13 Z OB	342
25.156.1453.0	8291 R / 14 Z OB	342
25.156.2253.0	8291 R / 2 Z	342
25.156.2353.0	8291 R / 3 Z	342
25.156.2453.0	8291 R / 4 Z	342
25.156.2553.0	8291 R / 5 Z	342
25.156.2653.0	8291 R / 6 Z	342
25.156.2753.0	8291 R / 7 Z	342
25.156.2853.0	8291 R / 8 Z	342
25.156.2953.0	8291 R / 9 Z	342
25.156.3053.0	8291 R / 10 Z	342
25.156.3153.0	8291 R / 11 Z	342
25.156.3253.0	8291 R / 12 Z	342
25.156.3353.0	8291 R / 13 Z	342
25.156.3453.0	8291 R / 14 Z	342
25.157.0253.0	8191 R / 3/ 2 Z OB	343
25.157.0353.0	8191 R / 5/ 3 Z OB	343
25.157.0453.0	8191 R / 7/ 4 Z OB	343
25.157.0553.0	8191 R / 9/ 5 Z OB	343
25.157.0653.0	8191 R / 11/ 6 Z OB	343
25.157.0753.0	8191 R / 13/ 7 Z OB	343
25.157.1253.0	8191 R / 3/ 2 Z	343
25.157.1353.0	8191 R / 5/ 3 Z	343
25.157.1453.0	8191 R / 7/ 4 Z	343
25.157.1553.0	8191 R / 9/ 5 Z	343
25.157.1653.0	8191 R / 11/ 6 Z	343
25.157.1753.0	8191 R / 13/ 7 Z	343
25.157.4253.0	8291 R / 3/ 2 Z OB	343
25.157.4353.0	8291 R / 5/ 3 Z OB	343
25.157.4453.0	8291 R / 7/ 4 Z OB	343
25.157.4553.0	8291 R / 9/ 5 Z OB	343
25.157.4653.0	8291 R / 11/ 6 Z OB	343
25.157.4753.0	8291R / 13/ 7 Z OB	343
25.157.5253.0	8291 R / 3/ 2 Z	343
25.157.5353.0	8291 R / 5/ 3 Z	343
25.157.5453.0	8291 R / 7/ 4 Z	343
25.157.5553.0	8291 R / 9/ 5 Z	343
25.157.5653.0	8291 R / 11/ 6 Z	343
25.157.5753.0	8291 R / 13/ 7 Z	343
25.160.0253.0	8191 / 2	344
25.160.0353.0	8191 / 3	344
25.160.0453.0	8191 / 4	344
25.160.0553.0	8191 / 5	344
25.160.0653.0	8191 / 6	344
25.160.0753.0	8191 / 7	344
25.160.0853.0	8191 / 8	344
25.160.0953.0	8191 / 9	344
25.160.1053.0	8191 / 10	344
25.160.1153.0	8191 / 11	344
25.160.1253.0	8191 / 12	344
25.160.1353.0	8191 / 13	344
25.160.1453.0	8191 / 14	344
25.160.1553.0	8191 / 15	344
25.160.1653.0	8191 / 16	344
25.160.6253.0	8191 / 2 ZW	345
25.160.6353.0	8191 / 3 ZW	345
25.160.6453.0	8191 / 4 ZW	345
25.160.6553.0	8191 / 5 ZW	345
25.160.6653.0	8191 / 6 ZW	345
25.160.6753.0	8191 / 7 ZW	345
25.160.6853.0	8191 / 8 ZW	345
25.160.6953.0	8191 / 9 ZW	345
25.160.7053.0	8191 / 10 ZW	345
25.160.7153.0	8191 / 11 ZW	345
25.160.7253.0	8191 / 12 ZW	345
25.160.7353.0	8191 / 13 ZW	345
25.160.7453.0	8191 / 14 ZW	345
25.160.7553.0	8191 / 15 ZW	345
25.160.7653.0	8191 / 16 ZW	345
25.161.0253.0	8191 / 2 OB	344
25.161.0353.0	8191 / 3 OB	344
25.161.0453.0	8191 / 4 OB	344
25.161.0553.0	8191 / 5 OB	344
25.161.0653.0	8191 / 6 OB	344
25.161.0753.0	8191 / 7 OB	344
25.161.0853.0	8191 / 8 OB	344
25.161.0953.0	8191 / 9 OB	344
25.161.1053.0	8191 / 10 OB	344
25.161.1153.0	8191 / 11 OB	344
25.161.1253.0	8191 / 12 OB	344
25.161.1353.0	8191 / 13 OB	344
25.161.1453.0	8191 / 14 OB	344
25.161.1553.0	8191 / 15 OB	344
25.161.1653.0	8191 / 16 OB	344
25.161.2553.0	8191 / 2 WVR OB	594
25.161.2653.0	8191 / 3 WVR OB	594
25.161.2853.0	8191 / 2 WVL OB	594
25.161.2953.0	8191 / 3 WVL OB	594
25.161.6253.0	8191 / 2 ZW OB	345
25.161.6353.0	8191 / 3 ZW OB	345
25.161.6453.0	8191 / 4 ZW OB	345
25.161.6553.0	8191 / 5 ZW OB	345
25.161.6653.0	8191 / 6 ZW OB	345
25.161.6753.0	8191 / 7 ZW OB	345
25.161.6853.0	8191 / 8 ZW OB	345
25.161.6953.0	8191 / 9 ZW OB	345
25.161.7053.0	8191 / 10 ZW OB	345
25.161.7153.0	8191 / 11 ZW OB	345
25.161.7253.0	8191 / 12 ZW OB	345
25.161.7353.0	8191 / 13 ZW OB	345
25.161.7453.0	8191 / 14 ZW OB	345
25.161.7553.0	8191 / 15 ZW OB	345
25.161.7653.0	8191 / 16 ZW OB	345
25.162.0253.0	8291 / 2	344
25.162.0353.0	8291 / 3	344
25.162.0453.0	8291 / 4	344
25.162.0553.0	8291 / 5	344
25.162.0653.0	8291 / 6	344
25.162.0753.0	8291 / 7	344
25.162.0853.0	8291 / 8	344
25.162.0953.0	8291 / 9	344
25.162.1053.0	8291 / 10	344
25.162.1153.0	8291 / 11	344
25.162.1253.0	8291 / 12	344
25.162.1353.0	8291 / 13	344
25.162.1453.0	8291 / 14	344
25.162.1553.0	8291 / 15	344
25.162.1653.0	8291 / 16	344
25.162.6253.0	8291 / 2 ZW	345
25.162.6353.0	8291 / 3 ZW	345
25.162.6453.0	8291 / 4 ZW	345
25.162.6553.0	8291 / 5 ZW	345
25.162.6653.0	8291 / 6 ZW	345
25.162.6753.0	8291 / 7 ZW	345
25.162.6853.0	8291 / 8 ZW	345
25.162.6953.0	8291 / 9 ZW	345
25.162.7053.0	8291 / 10 ZW	345
25.162.7153.0	8291 / 11 ZW	345
25.162.7253.0	8291 / 12 ZW	345
25.162.7353.0		345
25.162.7453.0	8291 / 14 ZW	345
25.162.7553.0	8291 / 15 ZW	345
25.162.7653.0	8291 / 16 ZW	345
25.163.0253.0	8291 / 2 OB	344
25.163.0353.0	8291 / 3 OB	344
25.163.0453.0	8291 / 4 OB	344
25.163.0553.0	8291 / 5 OB	344
25.163.0653.0	8291 / 6 OB	344
25.163.0753.0	8291 / 7 OB	344
25.163.0853.0	8291 / 8 OB	344
25.163.0953.0	8291 / 9 OB	344
25.163.1053.0	8291 / 10 OB	344
25.163.1153.0	8291 / 11 OB	344
25.163.1253.0	8291 / 12 OB	344
25.163.1353.0	8291 / 13 OB	344
25.163.1453.0	8291 / 14 OB	344
25.163.1553.0	8291 / 15 OB	344
25.163.1653.0	8291 / 16 OB	344
25.163.6253.0	8291 / 2 ZW OB	345
25.163.6353.0	8291 / 3 ZW OB	345
25.163.6453.0	8291 / 4 ZW OB	345
25.163.6553.0	8291 / 5 ZW OB	345
25.163.6653.0	8291 / 6 ZW OB	345
25.163.6753.0	8291 / 7 ZW OB	345
25.163.6853.0	8291 / 8 ZW OB	345
25.163.6953.0	8291 / 9 ZW OB	345
25.163.7053.0	8291 / 10 ZW OB	345
25.163.7153.0	8291 / 11 ZW OB	345
25.163.7253.0	8291 / 12 ZW OB	345
25.163.7353.0	8291 / 13 ZW OB	345
25.163.7453.0	8291 / 14 ZW OB	345
25.163.7553.0	8291 / 15 ZW OB	345
25.163.7653.0	8291 / 16 ZW OB	345
25.164.0253.0	8391 / 2	346
25.164.0353.0	8391 / 3	346
25.164.3253.0	8391 / 2 Z	347
25.164.3353.0	8391 / 3 Z	347
25.164.6253.0	8391 / 2 ZW	347
25.164.6353.0	8391 / 3 ZW	347
25.165.0253.0	8391 / 2 OB	346
25.165.0353.0	8391 / 3 OB	346
25.165.3253.0	8391 / 2 Z OB	346
25.165.3353.0	8391 / 3 Z OB	346
25.165.6253.0	8391 / 2 ZW OB	347
25.165.6353.0	8391 / 3 ZW OB	347
25.166.0253.0	8491 / 2	346
25.166.0353.0	8491 / 3	346
25.166.3253.0	8491 / 2 Z	347
25.166.3353.0	8491 / 3 Z	347
25.166.6253.0	8491 / 2 ZW	347
25.166.6353.0	8491 / 3 ZW	347
25.167.0253.0	8491 / 2 OB	346
25.167.0353.0	8491 / 3 OB	346
25.167.3253.0	8491 / 2 Z OB	346
25.167.3353.0	8491 / 3 Z OB	346
25.167.6253.0	8491 / 2 ZW OB	347
25.167.6353.0	8491 / 3 ZW OB	347
25.168.0253.0	8191 / 3/ 2	344
25.168.0353.0	8191 / 5/ 3	344
25.168.2253.0	8191 / 3/ 2 Z	345
25.168.2353.0	8191 / 5/ 3 Z	345
25.168.4253.0	8191 / 3/ 2 ZW	345
25.168.4353.0	8191 / 5/ 3 ZW	345
25.168.6253.0	8191 / 3/ 2 ZN	344
25.168.6353.0	8191 / 5/ 3 ZN	344
25.169.0253.0	8191 / 3/ 2 OB	344
25.169.0353.0	8191 / 5/ 3 OB	344
25.169.2253.0	8191 / 3/ 2 Z OB	345
25.169.2353.0	8191 / 5/ 3 Z OB	345
25.169.4253.0	8191 / 3/ 2 ZW OB	345
25.169.4353.0	8191 / 5/ 3 ZW OB	345
25.169.6253.0	8191 / 3/ 2 ZN OB	344
25.169.6353.0	8191 / 5/ 3 ZN OB	344
25.170.0253.0	8191 / 2 ZN	344
25.170.0353.0	8191 / 3 ZN	344
25.171.0253.0	8191 / 2 ZN OB	344

contents

Part no.	Type	section / page
25.171.0353.0	8191 / 3 ZN OB	344
25.172.0253.0	8291 / 2 ZN	344
25.172.0353.0	8291 / 3 ZN	344
25.173.0253.0	8291 / 2 ZN OB	344
25.173.0353.0	8291 / 3 ZN OB	344
25.174.0253.0	8391 / 2 ZN	347
25.174.0353.0	8391 / 3 ZN	347
25.175.0253.0	8391 / 2 ZN OB	346
25.175.0353.0	8391 / 3 ZN OB	346
25.176.0253.0	8491 / 2 ZN	347
25.176.0353.0	8491 / 3 ZN	347
25.177.0253.0	8491 / 2 ZN OB	346
25.177.0353.0	8491 / 3 ZN OB	346
25.178.0253.0	8191 E / 2 / 4	366
25.178.0353.0	8191 E / 3 / 6	366
25.178.0453.0	8191 E / 4 / 8	366
25.178.0553.0	8191 E / 5 / 10	366
25.178.0653.0	8191 E / 6 / 12	366
25.178.0753.0	8191 E / 7 / 14	366
25.178.0853.0	8191 E / 8 / 16	366
25.178.0953.0	8191 E / 9 / 18	366
25.178.1053.0	8191 E / 10 / 20	366
25.178.1153.0	8191 E / 11 / 22	366
25.178.1253.0	8191 E / 12 / 24	366
25.178.4253.0	8191 E / 2 / 4 ZN	366
25.178.4353.0	8191 E / 3 / 6 ZN	366
25.178.5253.0	8191 E / 2 / 4 OB	366
25.178.5353.0	8191 E / 3 / 6 OB	366
25.178.5453.0	8191 E / 4 / 8 OB	366
25.178.5553.0	8191 E / 5 / 10 OB	366
25.178.5653.0	8191 E / 6 / 12 OB	366
25.178.5753.0	8191 E / 7 / 14 OB	366
25.178.5853.0	8191 E / 8 / 16 OB	366
25.178.5953.0	8191 E / 9 / 18 OB	366
25.178.6053.0	8191 E / 10 / 20 OB	366
25.178.6153.0	8191 E / 11 / 22 OB	366
25.178.6253.0	8191 E / 12 / 24 OB	366
25.178.9253.0	8191 E / 2 / 4 ZN OB	366
25.178.9353.0	8191 E / 3 / 6 ZN OB	366
25.179.0253.0	8291 E / 2 / 4	366
25.179.0353.0	8291 E / 3 / 6	366
25.179.0453.0	8291 E / 4 / 8	366
25.179.0553.0	8291 E / 5 / 10	366
25.179.0653.0	8291 E / 6 / 12	366
25.179.0753.0	8291 E / 7 / 12	366
25.179.0853.0	8291 E / 8 / 16	366
25.179.0953.0	8291 E / 9 / 18	366
25.179.1053.0	8291 E / 10 / 20	366
25.179.1153.0	8291 E / 11 / 22	366
25.179.1253.0	8291 E / 12 / 24	366
25.179.4253.0	8291 E / 2 / 4 ZN	366
25.179.4353.0	8291 E / 3 / 6 ZN	366
25.179.5253.0	8291 E / 2 / 4 OB	366
25.179.5353.0	8291 E / 3 / 6 OB	366
25.179.5453.0	8291 E / 4 / 8 OB	366
25.179.5553.0	8291 E / 5 / 10 OB	366
25.179.5653.0	8291 E / 6 / 12 OB	366
25.179.5753.0	8291 E / 7 / 14 OB	366
25.179.5853.0	8291 E/ 8 / 16 OB	366
25.179.5953.0	8291 E/ 9 / 18 OB	366
25.179.6053.0	8291 E / 10 / 20 OB	366
25.179.6153.0	8291 E / 11 / 22 OB	366
25.179.6253.0	8291 E / 12 / 24 OB	366
25.179.9253.0	8291 E / 2 / 4 ZN OB	366
25.179.9353.0	8291 E / 3 / 6 ZN OB	366
25.180.0253.0	8191 D / 2 / 6	370
25.180.0353.0	8191 D / 3 / 9	370
25.180.0453.0	8191 D / 4 / 12	370
25.180.0553.0	8191 D / 5 / 15	370
25.180.0653.0	8191 D / 6 / 18	370
25.180.0753.0	8191 D / 7 / 21	370
25.180.0853.0	8191 D / 8 / 24	370
25.180.0953.0		370
25.180.1053.0	8191 D / 10 / 30	370
25.180.1153.0	8191 D / 11 / 33	370
25.180.1253.0	8191 D / 12 / 36	370
25.180.4253.0	8191 D / 2 / 6 ZN	370
25.180.4353.0	8191 D / 3 / 9 ZN	370
25.180.5253.0	8191 D / 2 / 6 OB	370
25.180.5353.0	8191 D / 3 / 9 OB	370
25.180.5453.0	8191 D / 4 / 12 OB	370
25.180.5553.0	8191 D / 5 / 15 OB	370
25.180.5653.0	8191 D / 6 / 18 OB	370
25.180.5753.0	8191 D / 7 / 21 OB	370
25.180.5853.0	8191 D / 8 / 24 OB	370
25.180.5953.0	8191 D / 9 / 27 OB	370
25.180.6053.0	8191 D / 10 / 30 OB	370
25.180.6153.0	8191 D / 11 / 33 OB	370
25.180.6253.0	8191 D / 12 / 36 OB	370
25.180.9253.0	8191 D / 2 / 6 ZN OB	370
25.180.9353.0	8191 D / 3 / 9 ZN OB	370
25.181.0253.0	8291 D / 2 / 6	370
25.181.0353.0	8291 D / 3 / 9	370
25.181.0453.0	8291 D / 4 / 12	370
25.181.0553.0	8291 D / 5 / 15	370
25.181.0653.0	8291 D / 6 / 18	370
25.181.0753.0	8291 D / 7 / 21	370
25.181.0853.0	8291 D / 8 / 24	370
25.181.0953.0	8291 D / 9 / 27	370
25.181.1053.0	8291 D / 10 / 30	370
25.181.1153.0	8291 D / 11 / 33	370
25.181.1253.0	8291 D / 12 / 36	370
25.181.4253.0	8291 D / 2 / 6 ZN	370
25.181.4353.0	8291 D / 3 / 9 ZN	370
25.181.5253.0	8291 D / 2 / 6 OB	370
25.181.5353.0	8291 D / 3 / 9 OB	370
25.181.5453.0	8291 D / 4 / 12 OB	370
25.181.5553.0	8291 D / 5 / 15 OB	370
25.181.5653.0	8291 D / 6 / 18 OB	370
25.181.5753.0	8291 D / 7 / 21 OB	370
25.181.5853.0	8291 D / 8 / 24 OB	370
25.181.5953.0	8291 D / 9 / 27 OB	370
25.181.6053.0	8291 D / 10 / 30 OB	370
25.181.6153.0	8291 D / 11 / 33 OB	370
25.181.6253.0	8291 D / 12 / 36 OB	370
25.181.9253.0	8291 D / 2 / 6 ZN OB	370
25.181.9353.0	8291 D / 3 / 9 ZN OB	370
25.190.0253.0	8192 / 2	338
25.190.0353.0	8192 / 3	338
25.190.0453.0	8192 / 4	338
25.190.0553.0	8192 / 5	338
25.190.0653.0	8192 / 6	338
25.190.0753.0	8192 / 7	338
25.190.0853.0	8192 / 8	338
25.190.0953.0	8192 / 9	338
25.190.1053.0	8192 / 10	338
25.190.1153.0	8192 / 11	338
25.190.1253.0	8192 / 12	338
25.190.1353.0	8192 / 13	338
25.190.1453.0	8192 / 14	338
25.190.1553.0	8192 / 15	338
25.190.1653.0	8192 / 16	338
25.190.9253.0	8192 / 2 ZN	338
25.190.9353.0	8192 / 3 ZN	338
25.191.0253.0	8192 / 2 OB	338
25.191.0353.0	8192 / 3 OB	338
25.191.0453.0	8192 / 4 OB	338
25.191.0553.0	8192 / 5 OB	338
25.191.0653.0	8192 / 6 OB	338
25.191.0753.0	8192 / 7 OB	338
25.191.0853.0	8192 / 8 OB	338
25.191.0953.0	8192 / 9 OB	338
25.191.1053.0	8192 / 10 OB	338
25.191.1153.0	8192 / 11 OB	338
25.191.1253.0	8192 / 12 OB	338
25.191.1353.0	8192 / 13 OB	338
25.191.1453.0	8192 / 14 OB	338
25.191.1553.0	8192 / 15 OB	338
25.191.1653.0	8192 / 16 OB	338
25.191.6253.0	8192 / 2 ZW OB	339
25.191.6353.0	8192 / 3 ZW OB	339
25.191.6453.0	8192 / 4 ZW OB	339
25.191.6553.0	8192 / 5 ZW OB	339
25.191.6653.0	8192 / 6 ZW OB	339
25.191.6753.0	8192 / 7 ZW OB	339
25.191.6853.0	8192 / 8 ZW OB	339
25.191.6953.0	8192 / 9 ZW OB	339
25.191.7053.0	8192 / 10 ZW OB	339
25.191.7153.0	8192 / 11 ZW OB	339
25.191.7253.0	8192 / 12 ZW OB	339
25.191.7353.0	8192 / 13 ZW OB	339
25.191.7453.0	8192 / 14 ZW OB	339
25.191.7553.0	8192 / 15 ZW OB	339
25.191.7653.0	8192 / 16 ZW OB	339
25.191.9253.0	8192 / 2 ZN OB	338
25.191.9353.0	8192 / 3 ZN OB	338
25.192.0253.0	8292 / 2	338
25.192.0353.0	8292 / 3	338
25.192.0453.0	8292 / 4	338
25.192.0553.0	8292 / 5	338
25.192.0653.0	8292 / 6	338
25.192.0753.0	8292 / 7	338
25.192.0853.0	8292 / 8	338
25.192.0953.0	8292 / 9	338
25.192.1053.0	8292 / 10	338
25.192.1153.0	8292 / 11	338
25.192.1253.0	8292 / 12	338
25.192.1353.0	8292 / 13	338
25.192.1453.0	8292 / 14	338
25.192.1553.0	8292 / 15	338
25.192.1653.0	8292 / 16	338
25.192.9253.0	8292 / 2 ZN	338
25.192.9353.0	8292 / 3 ZN	338
25.193.0253.0	8292 / 2 OB	338
25.193.0353.0	8292 / 3 OB	338
25.193.0453.0	8292 / 4 OB	338
25.193.0553.0	8292 / 5 OB	338
25.193.0653.0	8292 / 6 OB	338
25.193.0753.0	8292 / 7 OB	338
25.193.0853.0	8292 / 8 .OB	338
25.193.0953.0	8292 / 9 OB	338
25.193.1053.0	8292 / 10 OB	338
25.193.1153.0	8292 / 11 OB	338
25.193.1253.0	8292 / 12 OB	338
25.193.1353.0	8292 / 13 OB	338
25.193.1453.0	8292 / 14 OB	338
25.193.1553.0	8292 / 15 OB	338
25.193.1653.0	8292 / 16 OB	338
25.193.6253.0	8292 / 2 ZW OB	339
25.193.6353.0	8292 / 3 ZW OB	339
25.193.6453.0	8292 / 4 ZW OB	339
25.193.6553.0	8292 / 5 ZW OB	339
25.193.6653.0	8292 / 6 ZW OB	339
25.193.6753.0	8292 / 7 ZW OB	339
25.193.6853.0	8292 / 8 ZW OB	339
25.193.6953.0	8292 / 9 ZW OB	339
25.193.7053.0	8292 / 10 ZW OB	339
25.193.7153.0	8292 / 11 ZW OB	339
25.193.7253.0	8292 / 12 ZW OB	339
25.193.7353.0	8292 / 13 ZW OB	339
25.193.7453.0	8292 / 14 ZW OB	339
25.193.7553.0	8292 / 15 ZW OB	339
25.193.7653.0	8292 / 16 ZW OB	339
25.193.9253.0	8292 / 2 ZN OB	338
25.193.9353.0	8292 / 3 ZN OB	338
25.194.0253.0	8593 / 2	336
25.194.0353.0	8593 / 3	336
25.194.0453.0	8593 / 4	336
25.194.0553.0	8593 / 5	336
25.194.0653.0	8593 / 6	336
25.194.0753.0	8593 / 7	336
25.194.0853.0	8593 / 8	336
25.194.0953.0	8593 / 9	336
25.194.1053.0	8593 / 10	336
25.194.1153.0	8593 / 11	336
25.194.1253.0	8593 / 12	336
25.194.1353.0	8593 / 13	336
25.194.1453.0	8593 / 14	336
25.194.1553.0	8593 / 15	336
25.194.1653.0	8593 / 16	336
25.194.9253.0	8593 / 2 ZN	336
25.194.9353.0	8593 / 3 ZN	336
25.195.0253.0	8593 / 2 OB	336
25.195.0353.0	8593 / 3 OB	336
25.195.0453.0	8593 / 4 OB	336
25.195.0553.0	8593 / 5 OB	336
25.195.0653.0	8593 / 6 OB	336
25.195.0753.0	8593 / 7 OB	336
25.195.0853.0	8593 / 8 OB	336
25.195.0953.0	8593 / 9 OB	336
25.195.1053.0	8593 / 10 OB	336
25.195.1153.0	8593 / 11 OB	336
25.195.1253.0	8593 / 12 OB	336
25.195.1353.0	8593 / 13 OB	336
25.195.1453.0	8593 / 14 OB	336
25.195.1553.0	8593 / 15 OB	336
25.195.1653.0	8593 / 16 OB	336
25.195.9253.0	8593 / 2 ZN OB	336
25.195.9353.0	8593 / 3 ZN OB	336
25.196.0253.0	8893 / 2	336
25.196.0353.0	8893 / 3	336
25.196.0453.0	8893 / 4	336
25.196.0553.0	8893 / 5	336
25.196.0653.0	8893 / 6	336
25.196.0753.0	8893 / 7	336
25.196.0853.0	8893 / 8	336
25.196.0953.0	8893 / 9	336
25.196.1053.0	8893 / 10	336
25.196.1153.0	8893 / 11	336
25.196.1253.0	8893 / 12	336
25.196.1353.0	8893 / 13	336
25.196.1453.0	8893 / 14	336
25.196.1553.0	8893 / 15	336
25.196.1653.0	8893 / 16	336
25.196.9253.0	8893 / 2 ZN	336
25.196.9353.0	8893 / 3 ZN	336
25.197.0253.0	8893 / 2 OB	336
25.197.0353.0	8893 / 3 OB	336
25.197.0453.0	8893 / 4 OB	336
25.197.0553.0	8893 / 5 OB	336
25.197.0653.0	8893 / 6 OB	336
25.197.0753.0	8893 / 7 OB	336
25.197.0853.0	8893 / 8 OB	336
25.197.0953.0	8893 / 9 OB	336
25.197.1053.0	8893 / 10 OB	336
25.197.1153.0	8893 / 11 OB	336
25.197.1253.0	8893 / 12 OB	336
25.197.1353.0	8893 / 13 OB	336
25.197.1453.0	8893 / 14 OB	336
25.197.1553.0	8893 / 15 OB	336
25.197.1653.0	8893 / 16 OB	336
25.197.9253.0	8893 / 2 ZN OB	336
25.197.9353.0	8893 / 3 ZN OB	336
25.198.0253.0	8192 E / 2 / 4	364
25.198.0353.0	8192 E / 3 / 6	364

contents of part number

contents PART NUMBER

Part no.	Type	section / page
25.198.0453.0	8192 E / 4 / 8	364
25.198.0553.0	8192 E / 5 / 10	364
25.198.0653.0	8192 E / 6 / 12	364
25.198.0753.0	8192 E / 7 / 14	364
25.198.0853.0	8192 E / 8 / 16	364
25.198.0953.0	8192 E / 9 / 18	364
25.198.1053.0	8192 E / 10 / 20	364
25.198.1153.0	8192 E / 11 / 22	364
25.198.1253.0	8192 E / 12 / 24	364
25.198.4253.0	8192 E / 2 / 4 ZN	364
25.198.4353.0	8192 E / 3 / 6 ZN	364
25.198.5253.0	8192 E / 2 / 4 OB	364
25.198.5353.0	8192 E / 3 / 6 OB	364
25.198.5453.0	8192 E / 4 / 8 OB	364
25.198.5553.0	8192 E / 5 / 10 OB	364
25.198.5653.0	8192 E / 6 / 12 OB	364
25.198.5753.0	8192 E / 7 / 14 OB	364
25.198.5853.0	8192 E / 8 / 16 OB	364
25.198.5953.0	8192 E / 9 / 18 OB	364
25.198.6053.0	8192 E / 10 / 20 OB	364
25.198.6153.0	8192 E / 11 / 22 OB	364
25.198.6253.0	8192 E / 12 / 24 OB	364
25.198.9253.0	8192 E / 2 / 4 ZN OB	364
25.198.9353.0	8192 E / 3 / 6 ZN OB	364
25.199.0253.0	8292 E / 2 / 4	364
25.199.0353.0	8292 E / 3 / 6	364
25.199.0453.0	8292 E / 4 / 8	364
25.199.0553.0	8292 E / 5 / 10	364
25.199.0653.0	8292 E / 6 / 12	364
25.199.0753.0	8292 E / 7 / 14	364
25.199.0853.0	8292 E / 8 / 16	364
25.199.0953.0	8292 E / 9 / 18	364
25.199.1053.0	8292 E / 10 / 20	364
25.199.1153.0	8292 E / 11 / 22	364
25.199.1253.0	8292 E / 12 / 24	364
25.199.4253.0	8292 E / 2 / 4 ZN	364
25.199.4353.0	8292 E / 3 / 6 ZN	364
25.199.5253.0	8292 E / 2 / 4 OB	364
25.199.5353.0	8292 E / 3 / 6 OB	364
25.199.5453.0	8292 E / 4 / 8 OB	364
25.199.5553.0	8292 E / 5 / 10 OB	364
25.199.5653.0	8292 E / 6 / 12 OB	364
25.199.5753.0	8292 E / 7 / 14 OB	364
25.199.5853.0	8292 E / 8 / 16 OB	364
25.199.5953.0	8292 E / 9 / 18 OB	364
25.199.6053.0	8292 E / 10 / 20 OB	364
25.199.6153.0	8292 E / 11 / 22 OB	364
25.199.6253.0	8292 E / 12 / 24 OB	364
25.199.9253.0	8292 E / 2 / 4 ZN OB	364
25.199.9353.0	8292 E / 3 / 6 ZN OB	364
25.220.0253.0	8113 B / 2 TOP	296
25.220.0353.0	8113 B / 3 TOP	296
25.220.0453.0	8113 B / 4 TOP	296
25.220.0553.0	8113 B / 5 TOP	296
25.220.0653.0	8113 B / 6 TOP	296
25.220.0753.0	8113 B / 7 TOP	296
25.220.0853.0	8113 B / 8 TOP	296
25.220.0953.0	8113 B / 9 TOP	296
25.220.1053.0	8113 B / 10 TOP	296
25.220.1153.0	8113 B / 11 TOP	296
25.220.1253.0	8113 B / 12 TOP	296
25.220.1353.0	8113 B / 13 TOP	296
25.220.1453.0	8113 B / 14 TOP	296
25.220.1553.0	8113 B / 15 TOP	296
25.220.1653.0	8113 B / 16 TOP	296
25.220.3253.0	8113 B / 2 TOP OB	296
25.220.3353.0	8113 B / 3 TOP OB	296
25.220.3453.0	8113 B / 4 TOP OB	296
25.220.3553.0	8113 B / 5 TOP OB	296
25.220.3653.0	8113 B / 6 TOP OB	296
25.220.3753.0	8113 B / 7 TOP OB	296
25.220.3853.0	8113 B / 8 TOP OB	296
25.220.3953.0	8113 B / 9 TOP OB	296
25.220.4053.0	8113 B / 10 TOP OB	296
25.220.4153.0	8113 B / 11 TOP OB	296
25.220.4253.0	8113 B / 12 TOP OB	296
25.220.4353.0	8113 B / 13 TOP OB	296
25.220.4453.0	8113 B / 14 TOP OB	296
25.220.4553.0	8113 B / 15 TOP OB	296
25.220.4653.0	8113 B / 16 TOP OB	296
25.230.0253.0		296
25.230.0353.0		296
25.230.0453.0		296
25.230.0553.0		296
25.230.0653.0		296
25.230.0753.0		296
25.230.0853.0		296
25.230.0953.0		296
25.230.1053.0		296
25.230.1153.0		296
25.230.1253.0		296
25.230.1353.0		296
25.230.1453.0		296
25.230.1553.0		296
25.230.1653.0		296

Part no.	Type	section / page
25.230.3253.0	8113 B / 2 TOP LED OB	296
25.230.3353.0	8113 B / 3 TOP LED OB	296
25.230.3453.0	8113 B / 4 TOP LED OB	296
25.230.3553.0	8113 B / 5 TOP LED OB	296
25.230.3653.0	8113 B / 6 TOP LED OB	296
25.230.3753.0	8113 B / 7 TOP LED OB	296
25.230.3853.0	8113 B / 8 TOP LED OB	296
25.230.3953.0	8113 B / 9 TOP LED OB	296
25.230.4053.0	8113 B / 10 TOP LED OB	296
25.230.4153.0	8113 B / 11 TOP LED OB	296
25.230.4253.0	8113 B / 12 TOP LED OB	296
25.230.4353.0		296
25.230.4453.0		296
25.230.4553.0	8113 B / 15 TOP LED OB	296
25.230.4653.0	8113 B / 16 TOP LED OB	296
25.240.0253.0	8213 B / 2 TOP	296
25.240.0353.0	8213 B / 3 TOP	296
25.240.0453.0	8213 B / 4 TOP	296
25.240.0553.0	8213 B / 5 TOP	296
25.240.0653.0	8213 B / 6 TOP	296
25.240.0753.0	8213 B / 7 TOP	296
25.240.0853.0	8213 B / 8 TOP	296
25.240.0953.0	8213 B / 9 TOP	296
25.240.1053.0	8213 B / 10 TOP	296
25.240.1153.0	8213 B / 11 TOP	296
25.240.1253.0	8213 B / 12 TOP	296
25.240.1353.0	8213 B / 13 TOP	296
25.240.1453.0	8213 B / 14 TOP	296
25.240.1553.0	8213 B / 15 TOP	296
25.240.1653.0	8213 B / 16 TOP	296
25.240.3253.0	8213 B / 2 TOP OB	296
25.240.3353.0	8213 B / 3 TOP OB	296
25.240.3453.0	8213 B / 4 TOP OB	296
25.240.3553.0	8213 B / 5 TOP OB	296
25.240.3653.0	8213 B / 6 TOP OB	296
25.240.3753.0	8213 B / 7 TOP OB	296
25.240.3853.0	8213 B / 8 TOP OB	296
25.240.3953.0	8213 B / 9 TOP OB	296
25.240.4053.0	8213 B / 10 TOP OB	296
25.240.4153.0	8213 B / 11 TOP OB	296
25.240.4253.0	8213 B / 12 TOP OB	296
25.240.4353.0	8213 B / 13 TOP OB	296
25.240.4453.0	8213 B / 14 TOP OB	296
25.240.4553.0	8213 B / 15 TOP OB	296
25.240.4653.0	8213 B / 16 TOP OB	296
25.303.0253.0	8213 S 2 DFWW	305
25.303.0353.0	8213 S / 3 DFWW	305
25.303.0453.0	8213 S / 4 DFWW	305
25.303.0553.0	8213 S / 5 DFWW	305
25.303.0653.0	8213 S / 6 DFWW	305
25.303.0753.0	8213 S / 7 DFWW	305
25.303.0853.0	8213 S / 8 DFWW	305
25.303.0953.0	8213 S / 9 DFWW	305
25.303.1053.0	8213 S / 10 DFWW	305
25.303.1153.0	8213 S / 11 DFWW	305
25.303.1253.0	8213 S / 12 DFWW	305
25.303.1353.0	8213 S / 13 DFWW	305
25.303.1453.0	8213 s / 14 DFWW	305
25.303.1553.0	8213 S / 15 DFWW	305
25.303.1653.0	8213 S / 16 DFWW	305
25.303.3253.0	8213 S / 2 DFLS	305
25.303.3353.0	8213 S / 3 DFLS	305
25.303.3453.0	8213 S / 4 DFLS	305
25.303.3553.0	8213 S / 5 DFLS	305
25.303.3653.0	8213 S / 6 DFLS	305
25.303.3753.0	8213 S / 7 DFLS	305
25.303.3853.0	8213 S / 8 DFLS	305
25.303.3953.0	8213 S / 9 DFLS	305
25.303.4053.0	8213 S / 10 DFLS	305
25.303.4153.0	8213 S / 11 DFLS	305
25.303.4253.0	8213 S / 12 DFLS	305
25.303.4353.0	8213 S / 13 DFLS	305
25.303.4453.0	8213 S / 14 DFLS	305
25.303.4553.0	8213 S / 15 DFLS	305
25.303.4653.0	8213 S / 16 DFLS	305
25.313.0253.0	8213 S / 2 DFWW M	305
25.313.0353.0	8213 S / 3 DFWW M	305
25.313.0453.0	8213 S / 4 DFWW M	305
25.313.0553.0	8213 S / 5 DFWW M	305
25.313.0653.0	8213 S / 6 DFWW M	305
25.313.0753.0	8213 S / 7 DFWW M	305
25.313.0853.0	8213 S / 8 DFWW M	305
25.313.0953.0	8213 S / 9 DFWW M	305
25.313.1053.0	8213 S / 10 DFWW M	305
25.313.1153.0	8213 S / 11 DFWW M	305
25.313.1253.0	8213 S / 12 DFWW M	305
25.313.1353.0	8213 S / 13 DFWW M	305
25.313.1453.0	8213 S / 14 DFWW M	305
25.313.1553.0	8213 S / 15 DFWW M	305
25.313.1653.0	8213 S / 16 DFWW M	305
25.313.3253.0	8213 S / 2 DFLS M	305
25.313.3353.0	8213 S / 3 DFLS M	305
25.313.3453.0	8213 S / 4 DFLS M	305
25.313.3553.0	8213 S / 5 DFLS M	305
25.313.3653.0	8213 S / 6 DFLS M	305

Part no.	Type	section / page
25.313.3753.0	8213 S / 7 DFLS M	305
25.313.3853.0	8213 S / 8 DFLS M	305
25.313.3953.0	8213 S / 9 DFLS M	305
25.313.4053.0	8213 S / 10 DFLS M	305
25.313.4153.0	8213 S / 11 DFLS M	305
25.313.4253.0	8213 S / 12 DFLS M	305
25.313.4353.0	8213 S / 13 DFLS M	305
25.313.4453.0	8213 S / 14 DFLS M	305
25.313.4553.0	8213 S / 15 DFLS M	305
25.313.4653.0	8213 S / 16 DFLS M	305
25.320.0253.0	8113 B / 2	286
25.320.0353.0	8113 B / 3	286
25.320.0453.0	8113 B / 4	286
25.320.0553.0	8113 B / 5	286
25.320.0653.0	8113 B / 6	286
25.320.0753.0	8113 B / 7	286
25.320.0853.0	8113 B / 8	286
25.320.0953.0	8113 B / 9	286
25.320.1053.0	8113 B / 10	286
25.320.1153.0	8113 B / 11	286
25.320.1253.0	8113 B / 12	286
25.320.1353.0	8113 B / 13	286
25.320.1453.0	8113 B / 14	286
25.320.1553.0	8113 B / 15	286
25.320.1653.0	8113 B / 16	286
25.320.3253.0	8113 B / 2 OB	286
25.320.3353.0	8113 B / 3 OB	286
25.320.3453.0	8113 B / 4 OB	286
25.320.3553.0	8113 B / 5 OB	286
25.320.3653.0	8113 B / 6 OB	286
25.320.3753.0	8113 B / 7 OB	286
25.320.3853.0	8113 B / 8 OB	286
25.320.3953.0	8113 B / 9 OB	286
25.320.4053.0	8113 B / 10 OB	286
25.320.4153.0	8113 B / 11 OB	286
25.320.4253.0	8113 B / 12 OB	286
25.320.4353.0	8113 B / 13 OB	286
25.320.4453.0	8113 B / 14 OB	286
25.320.4553.0	8113 B / 15 OB	286
25.320.4653.0	8113 B / 16 OB	286
25.322.0253.0	8113 B / 2 F	286
25.322.0353.0	8113 B / 3 F	286
25.322.0453.0	8113 B / 4 F	286
25.322.0553.0	8113 B / 5 F	286
25.322.0653.0	8113 B / 6 F	286
25.322.0753.0	8113 B / 7 F	286
25.322.0853.0	8113 B / 8 F	286
25.322.0953.0	8113 B / 9 F	286
25.322.1053.0	8113 B / 10 F	286
25.322.1153.0	8113 B / 11 F	286
25.322.1253.0	8113 B / 12 F	286
25.322.1353.0	8113 B / 13 F	286
25.322.1453.0	8113 B / 14 F	286
25.322.1553.0	8113 B / 15 F	286
25.322.1653.0	8113 B / 16 F	286
25.322.3253.0	8113 B / 2 F OB	286
25.322.3353.0	8113 B / 3 F OB	286
25.322.3453.0	8113 B / 4 F OB	286
25.322.3553.0	8113 B / 5 F OB	286
25.322.3653.0	8113 B / 6 F OB	286
25.322.3753.0	8113 B / 7 F OB	286
25.322.3853.0	8113 B / 8 F OB	286
25.322.3953.0	8113 B / 9 F OB	286
25.322.4053.0	8113 B / 10 F OB	286
25.322.4153.0	8113 B / 11 F OB	286
25.322.4253.0	8113 B / 12 F OB	286
25.322.4353.0	8113 B / 13 F OB	286
25.322.4453.0	8113 B / 14 F OB	286
25.322.4553.0	8113 B / 15 F OB	286
25.322.4653.0	8113 B / 16 F OB	286
25.323.0253.0	8213 B / 2 F	286
25.323.0353.0	8213 B / 3 F	286
25.323.0453.0	8213 B / 4 F	286
25.323.0553.0	8213 B / 5 F	286
25.323.0653.0	8213 B / 6 F	286
25.323.0753.0	8213 B / 7 F	286
25.323.0853.0	8213 B / 8 F	286
25.323.0953.0	8213 B / 9 F	286
25.323.1053.0	8213 B / 10 F	286
25.323.1153.0	8213 B / 11 F	286
25.323.1253.0	8213 B / 12 F	286
25.323.1353.0	8213 B / 13 F	286
25.323.1453.0	8213 B / 14 F	286
25.323.1553.0	8213 B / 15 F	286
25.323.1653.0	8213 B / 16 F	286
25.323.3253.0	8213 B / 2 F OB	286
25.323.3353.0	8213 B / 3 F OB	286
25.323.3453.0	8213 B / 4 F OB	286
25.323.3501.0	8213 B / 5 F OB GOLD	411
25.323.3553.0	8213 B / 5 F OB	286
25.323.3653.0	8213 B / 6 F OB	286
25.323.3753.0	8213 B / 7 F OB	286
25.323.3853.0	8213 B / 8 F OB	286
25.323.3953.0	8213 B / 9 F OB	286
25.323.4053.0	8213 B / 10 F OB	286

contents

Part no.	Type	section / page
25.323.4153.0	8213 B / 11 F OB	286
25.323.4253.0	8213 B / 12 F OB	286
25.323.4353.0	8213 B / 13 F OB	286
25.323.4453.0	8213 B / 14 F OB	286
25.323.4553.0	8213 B / 15 F OB	286
25.323.4653.0	8213 B / 16 F OB	286
25.324.0253.0	8313 B / 2 F	288
25.324.0353.0	8313 B / 3 F	288
25.324.0453.0	8313 B / 4 F	288
25.324.0553.0	8313 B / 5 F	288
25.324.0653.0	8313 B / 6 F	288
25.324.0753.0	8313 B / 7 F	288
25.324.0853.0	8313 B / 8 F	288
25.324.0953.0	8313 B / 9 F	288
25.324.1053.0	8313 B / 10 F	288
25.324.1153.0	8313 B / 11 F	288
25.324.1253.0	8313 B / 12 F	288
25.324.2253.0	8313 B / 2 F OB	288
25.324.2353.0	8313 B / 3 F OB	288
25.324.2453.0	8313 B / 4 F OB	288
25.324.2553.0	8313 B / 5 F OB	288
25.324.2653.0	8313 B / 6 F OB	288
25.324.2753.0	8313 B / 7 F OB	288
25.324.2853.0	8313 B / 8 F OB	288
25.324.2953.0	8313 B / 9 F OB	288
25.324.3053.0	8313 B / 10 F OB	288
25.324.3153.0	8313 B / 11 F OB	288
25.324.3253.0	8313 B / 12 F OB	288
25.324.4253.0	8413 B / 2 F	288
25.324.4353.0	8413 B / 3 F	288
25.324.4453.0	8413 B / 4 F	288
25.324.4553.0	8413 B / 5 F	288
25.324.4653.0	8413 B / 6 F	288
25.324.4753.0	8413 B / 7 F	288
25.324.4853.0	8413 B / 8 F	288
25.324.4953.0	8413 B / 9 F	288
25.324.5053.0	8413 B / 10 F	288
25.324.5153.0	8413 B / 11 F	288
25.324.5253.0	8413 B / 12 F	288
25.324.6253.0	8413 B / 2 F OB	288
25.324.6353.0	8413 B / 3 F OB	288
25.324.6453.0	8413 B / 4 F OB	288
25.324.6553.0	8413 B / 5 F OB	288
25.324.6653.0	8413 B / 6 F OB	288
25.324.6753.0	8413 B / 7 F OB	288
25.324.6853.0	8413 B / 8 F OB	288
25.324.6953.0	8413 B / 9 F OB	288
25.324.7053.0	8413 B / 10 F OB	288
25.324.7153.0	8413 B / 11 F OB	288
25.324.7253.0	8413 B / 12 F OB	288
25.325.0253.0	8113 B / 2 VR	289
25.325.0353.0	8113 B / 3 VR	289
25.325.0453.0	8113 B / 4 VR	289
25.325.0553.0	8113 B / 5 VR	289
25.325.0653.0	8113 B / 6 VR	289
25.325.0753.0	8113 B / 7 VR	289
25.325.0853.0	8113 B / 8 VR	289
25.325.0953.0	8113 B / 9 VR	289
25.325.1053.0	8113 B / 10 VR	289
25.325.1153.0	8113 B / 11 VR	289
25.325.1253.0	8113 B / 12 VR	289
25.325.1353.0	8113 B / 13 VR	289
25.325.1453.0	8113 B / 14 VR	289
25.325.1553.0	8113 B / 15 VR	289
25.325.1653.0	8113 B / 16 VR	289
25.325.3253.0	8113 B / 2 VR OB	289
25.325.3353.0	8113 B / 3 VR OB	289
25.325.3453.0	8113 B / 4 VR OB	289
25.325.3553.0	8113 B / 5 VR OB	289
25.325.3653.0	8113 B / 6 VR OB	289
25.325.3753.0	8113 B / 7 VR OB	289
25.325.3853.0	8113 B / 8 VR OB	289
25.325.3953.0	8113 B / 9 VR OB	289
25.325.4053.0	8113 B / 10 VR OB	289
25.325.4153.0	8113 B / 11 VR OB	289
25.325.4253.0	8113 B / 12 VR OB	289
25.325.4353.0	8113 B / 13 VR OB	289
25.325.4453.0	8113 B / 14 VR OB	289
25.325.4553.0	8113 B / 15 VR OB	289
25.325.4653.0	8113 B / 16 VR OB	289
25.326.0253.0	8113 B / 2 VL	289
25.326.0353.0	8113 B / 3 VL	289
25.326.0453.0	8113 B / 4 VL	289
25.326.0553.0	8113 B / 5 VL	289
25.326.0653.0	8113 B / 6 VL	289
25.326.0753.0	8113 B / 7 VL	289
25.326.0853.0	8113 B / 8 VL	289
25.326.0953.0	8113 B / 9 VL	289
25.326.1053.0	8113 B / 10 VL	289
25.326.1153.0	8113 B / 11 VL	289
25.326.1253.0	8113 B / 12 VL	289
25.326.1353.0	8113 B / 13 VL	289
25.326.1453.0	8113 B / 14 VL	289
25.326.1553.0	8113 B / 15 VL	289
25.326.1653.0	8113 B / 16 VL	289
25.326.3253.0	8113 B / 2 VL OB	289
25.326.3353.0	8113 B / 3 VL OB	289
25.326.3453.0	8113 B / 4 VL OB	289
25.326.3553.0	8113 B / 5 VL OB	289
25.326.3653.0	8113 B / 6 VL OB	289
25.326.3753.0	8113 B / 7 VL OB	289
25.326.3853.0	8113 B / 8 VL OB	289
25.326.3953.0	8113 B / 9 VL OB	289
25.326.4053.0	8113 B / 10 VL OB	289
25.326.4153.0	8113 B / 11 VL OB	289
25.326.4253.0	8113 B / 12 VL OB	289
25.326.4353.0	8113 B / 13 VL OB	289
25.326.4453.0	8113 B / 14 VL OB	289
25.326.4553.0	8113 B / 15 VL OB	289
25.326.4653.0	8113 B / 16 VL OB	289
25.330.3253.0	8113 S / 2 G OB	297
25.330.3353.0	8113 S / 3 G OB	297
25.330.3453.0	8113 S / 4 G OB	297
25.330.3553.0	8113 S / 5 G OB	297
25.330.3653.0	8113 S / 6 G OB	297
25.330.3753.0	8113 S / 7 G OB	297
25.330.3853.0	8113 S / 8 G OB	297
25.330.3953.0	8113 S / 9 G OB	297
25.330.4053.0	8113 S / 10 G OB	297
25.330.4153.0	8113 S / 11 G OB	297
25.330.4253.0	8113 S / 12 G OB	297
25.330.4353.0	8113 S / 13 G OB	297
25.330.4453.0	8113 S / 14 G OB	297
25.330.4553.0	8113 S / 15 G OB	297
25.330.4653.0	8113 S / 16 G OB	297
25.332.3253.0	8113 S / 2 W OB	298
25.332.3353.0	8113 S / 3 W OB	298
25.332.3453.0	8113 S / 4 W OB	298
25.332.3553.0	8113 S / 5 W OB	298
25.332.3653.0	8113 S / 6 W OB	298
25.332.3753.0	8113 S / 7 W OB	298
25.332.3853.0	8113 S / 8 W OB	298
25.332.3953.0	8113 S / 9 W OB	298
25.332.4053.0	8113 S / 10 W OB	298
25.332.4153.0	8113 S / 11 W OB	298
25.332.4253.0	8113 S / 12 W OB	298
25.332.4353.0	8113 S / 13 W OB	298
25.332.4453.0	8113 S / 14 W OB	298
25.332.4553.0	8113 S / 15 W OB	298
25.332.4653.0	8113 S / 16 W OB	298
25.334.3253.0	8113 S E / 2 G OB	303
25.334.3353.0	8113 S E / 3 G OB	303
25.336.3253.0	8113 S E / 2 W OB	303
25.336.3353.0	8113 S E / 3 W OB	303
25.338.3253.0	8113 S / 2 GF OB	298
25.338.3353.0	8113 S / 3 GF OB	298
25.338.3453.0	8113 S / 4 GF OB	298
25.338.3553.0	8113 S / 5 GF OB	298
25.338.3653.0	8113 S / 6 GF OB	298
25.338.3753.0	8113 S / 7 GF OB	298
25.338.3853.0	8113 S / 8 GF OB	298
25.338.3953.0	8113 S / 9 GF OB	298
25.338.4053.0	8113 S / 10 GF OB	298
25.338.4153.0	8113 S / 11 GF OB	298
25.338.4253.0	8113 S / 12 GF OB	298
25.338.4353.0	8113 S / 13 GF OB	298
25.338.4453.0	8113 S / 14 GF OB	298
25.338.4553.0	8113 S / 15 GF OB	298
25.338.4653.0	8113 S / 16 GF OB	298
25.339.3253.0	8113 S / 2 WF OB	299
25.339.3353.0	8113 S / 3 WF OB	299
25.339.3453.0	8113 S / 4 WF OB	299
25.339.3553.0	8113 S / 5 WF OB	299
25.339.3653.0	8113 S / 6 WF OB	299
25.339.3753.0	8113 S / 7 WF OB	299
25.339.3853.0	8113 S / 8 WF OB	299
25.339.3953.0	8113 S / 9 WF OB	299
25.339.4053.0	8113 S / 10 WF OB	299
25.339.4153.0	8113 S / 11 WF OB	299
25.339.4253.0	8113 S / 12 WF OB	299
25.339.4353.0	8113 S / 13 WF OB	299
25.339.4453.0	8113 S / 14 WF OB	299
25.339.4553.0	8113 S / 15 WF OB	299
25.339.4653.0	8113 / 16 WF OB	299
25.340.0253.0	8213 B / 2	286
25.340.0353.0	8213 B / 3	286
25.340.0453.0	8213 B / 4	286
25.340.0553.0	8213 B / 5	286
25.340.0653.0	8213 B / 6	286
25.340.0753.0	8213 B / 7	286
25.340.0853.0	8213 B / 8	286
25.340.0953.0	8213 B / 9	286
25.340.1053.0	8213 B / 10	286
25.340.1153.0	8213 B / 11	286
25.340.1253.0	8213 B / 12	286
25.340.1353.0	8213 B / 13	286
25.340.1453.0	8213 B / 14	286
25.340.1553.0	8213 B / 15	286
25.340.1653.0	8213 B / 16	286
25.340.3253.0	8213 B / 2 OB	286
25.340.3353.0	8213 B / 3 OB	286
25.340.3453.0	8213 B / 4 OB	286
25.340.3553.0	8213 B / 5 OB	286
25.340.3653.0	8213 B / 6 OB	286
25.340.3753.0	8213 B / 7 OB	286
25.340.3853.0	8213 B / 8 OB	286
25.340.3953.0	8213 B / 9 OB	286
25.340.4053.0	8213 B / 10 OB	286
25.340.4153.0	8213 B / 11 OB	286
25.340.4253.0	8213 B / 12 OB	286
25.340.4353.0	8213 B / 13 OB	286
25.340.4453.0	8213 B / 14 OB	286
25.340.4553.0	8213 B / 15 OB	286
25.340.4653.0	8213 B / 16 OB	286
25.342.0253.0	8213 BL / 2 G	295
25.342.0353.0	8213 BL / 3 G	295
25.342.0453.0	8213 BL / 4 G	295
25.342.0553.0	8213 BL / 5 G	295
25.342.0653.0	8213 BL / 6 G	295
25.342.0753.0	8213 BL / 7 G	295
25.342.0853.0	8213 BL / 8 G	295
25.342.0953.0	8213 BL / 9 G	295
25.342.1053.0	8213 BL / 10 G	295
25.342.1153.0	8213 BL / 11 G	295
25.342.1253.0	8213 BL / 12 G	295
25.342.1353.0	8213 BL / 13 G	295
25.342.1453.0	8213 BL / 14 G	295
25.342.1553.0	8213 BL / 15 G	295
25.342.1653.0	8213 BL / 16 G	295
25.342.3253.0	8213 BL / 2 G OB	295
25.342.3353.0	8213 BL / 3 G OB	295
25.342.3453.0	8213 BL / 4 G OB	295
25.342.3553.0	8213 BL / 5 G OB	295
25.342.3653.0	8213 BL / 6 G OB	295
25.342.3753.0	8213 BL / 7 G OB	295
25.342.3853.0	8213 BL / 8 G OB	295
25.342.3953.0	8213BL / 9 G OB	295
25.342.4053.0	8213 BL / 10 G OB	295
25.342.4153.0	8213 BL / 11 G OB	295
25.342.4253.0	8213 BL / 12 G OB	295
25.342.4353.0	8213 BL / 13 G OB	295
25.342.4453.0	8213 BL / 14 G OB	295
25.342.4553.0	8213 BL / 15 G OB	295
25.342.4653.0	8213 BL / 16 G OB	295
25.343.0253.0	8213 BL / 2 W	295
25.343.0353.0	8213 BL / 3 W	295
25.343.0453.0	8213 BL / 4 W	295
25.343.0553.0	8213 BL / 5 W	295
25.343.0653.0	8213 BL / 6 W	295
25.343.0753.0	8213 BL / 7 W	295
25.343.0853.0	8213 BL / 8 W	295
25.343.0953.0	8213 BL / 9 W	295
25.343.1053.0	8213 BL / 10 W	295
25.343.1153.0	8213 BL / 11 W	295
25.343.1253.0	8213 BL / 12 W	295
25.343.1353.0	8213 BL / 13 W	295
25.343.1453.0	8213 BL / 14 W	295
25.343.1553.0	8213 BL / 15 W	295
25.343.1653.0	8213 BL / 16 W	295
25.343.3253.0	8213 BL / 2 W OB	295
25.343.3353.0	8213 BL / 3 W OB	295
25.343.3453.0	8213 BL / 4 W OB	295
25.343.3553.0	8213 BL / 5 W OB	295
25.343.3653.0	8213 BL / 6 W OB	295
25.343.3753.0	8213 BL / 7 W OB	295
25.343.3853.0	8213 BL / 8 W OB	295
25.343.3953.0	8213 BL / 9W OB	295
25.343.4053.0	8213 BL / 10 W OB	295
25.343.4153.0	8213 BL / 11 W OB	295
25.343.4253.0	8213 BL / 12 W OB	295
25.343.4353.0	8213 BL / 13 W OB	295
25.343.4453.0	8213 BL / 14 W OB	295
25.343.4553.0	8213 BL / 15 W OB	295
25.343.4653.0	8213 BL / 16 W OB	295
25.345.0253.0	8213 B / 2 VR	289
25.345.0353.0	8213 B / 3 VR	289
25.345.0453.0	8213 B / 4 VR	289
25.345.0553.0	8213 B / 5 VR	289
25.345.0653.0	8213 B / 6 VR	289
25.345.0753.0	8213 B / 7 VR	289
25.345.0853.0	8213 B / 8 VR	289
25.345.0953.0	8213 B / 9 VR	289
25.345.1053.0	8213 B / 10 VR	289
25.345.1153.0	8213 B / 11 VR	289
25.345.1253.0	8213 B / 12 VR	289
25.345.1353.0	8213 B / 13 VR	289
25.345.1453.0	8213 B / 14 VR	289
25.345.1553.0	8213 B / 15 VR	289
25.345.1653.0	8213 B / 16 VR	289
25.345.3253.0	8213 B / 2 VR OB	289
25.345.3353.0	8213 B / 3 VR OB	289
25.345.3453.0	8213 B / 4 VR OB	289
25.345.3553.0	8213 B / 5 VR OB	289
25.345.3653.0	8213 B / 6 VR OB	289
25.345.3753.0	8213 B / 7 VR OB	289

contents of part number

contents PART NUMBER

Part no.	Type	section / page
25.345.3853.0	8213 B / 8 VR OB	289
25.345.3953.0	8213 B / 9 VR OB	289
25.345.4053.0	8213 B / 10 VR OB	289
25.345.4153.0	8213 B / 11 VR OB	289
25.345.4253.0	8213 B / 12 VR OB	289
25.345.4353.0	8213 B / 13 VR OB	289
25.345.4453.0	8213 B / 14 VR OB	289
25.345.4553.0	8213 B / 15 VR OB	289
25.345.4653.0	8213 B / 16 VR OB	289
25.346.0253.0	8213 B / 2 VL	289
25.346.0353.0	8213 B / 3 VL	289
25.346.0453.0	8213 B / 4 VL	289
25.346.0553.0	8213 B / 5 VL	289
25.346.0653.0	8213 B / 6 VL	289
25.346.0753.0	8213 B / 7 VL	289
25.346.0853.0	8213 B / 8 VL	289
25.346.0953.0	8213 B / 9 VL	289
25.346.1053.0	8213 B / 10 VL	289
25.346.1153.0	8213 B / 11 VL	289
25.346.1253.0	8213 B / 12 VL	289
25.346.1353.0	8213 B / 13 VL	289
25.346.1453.0	8213 B / 14 VL	289
25.346.1553.0	8213 B / 15 VL	289
25.346.1653.0	8213 B / 16 VL	289
25.346.3253.0	8213 B / 2 VL OB	289
25.346.3353.0	8213 B / 3 VL OB	289
25.346.3453.0	8213 B / 4 VL OB	289
25.346.3553.0	8213 B / 5 VL OB	289
25.346.3653.0	8213 B / 6 VL OB	289
25.346.3753.0	8213 B / 7 VL OB	289
25.346.3853.0	8213 B / 8 VL OB	289
25.346.3953.0	8213 B / 9 VL OB	289
25.346.4053.0	8213 B / 10 VL OB	289
25.346.4153.0	8213 B / 11 VL OB	289
25.346.4253.0	8213 B / 12 VL OB	289
25.346.4353.0	8213 B / 13 VL OB	289
25.346.4453.0	8213 B / 14 VL OB	289
25.346.4553.0	8213 B / 15 VL OB	289
25.346.4653.0	8213 B / 16 VL OB	289
25.350.3253.0	8213 S / 2 G OB	297
25.350.3353.0	8213 S / 3 G OB	297
25.350.3453.0	8213 S / 4 G OB	297
25.350.3553.0	8213 S / 5 G OB	297
25.350.3653.0	8213 S / 6 G OB	297
25.350.3753.0	8213 S / 7 G OB	297
25.350.3853.0	8213 S / 8 G OB	297
25.350.3953.0	8213 S / 9 G OB	297
25.350.4053.0	8213 S / 10 G OB	297
25.350.4153.0	8213 S / 11 G OB	297
25.350.4253.0	8213 S / 12 G OB	297
25.350.4353.0	8213 S / 13 G OB	297
25.350.4453.0	8213 S / 14 G OB	297
25.350.4553.0	8213 S / 15 G OB	297
25.350.4653.0	8213 S / 16 G OB	297
25.352.3253.0	8213 S / 2 W OB	298
25.352.3353.0	8213 S / 3 W OB	298
25.352.3453.0	8213 S / 4 W OB	298
25.352.3553.0	8213 S / 5 W OB	298
25.352.3653.0	8213 S / 6 W OB	298
25.352.3753.0	8213 S / 7 W OB	298
25.352.3853.0	8213 S / 8 W OB	298
25.352.3953.0	8213 S / 9 W OB	298
25.352.4053.0	8213 S / 10 W OB	298
25.352.4153.0	8213 S / 11 W OB	298
25.352.4253.0	8213 S / 12 W OB	298
25.352.4353.0	8213 S / 13 W OB	298
25.352.4453.0	8213 S / 14 W OB	298
25.352.4553.0	8213 S / 15 W OB	298
25.352.4653.0	8213 S / 16 W OB	298
25.354.3253.0	8213 S E / 2 G OB	303
25.354.3353.0	8213 S E / 3 G OB	303
25.356.3253.0	8213 S E / 2 W OB	303
25.356.3353.0	8213 S E / 3 W OB	303
25.358.3253.0	8213 S / 2 WF OB	299
25.358.3353.0	8213 S / 3 WF OB	299
25.358.3453.0	8213 S / 4 WF OB	299
25.358.3553.0	8213 S / 5 WF OB	299
25.358.3653.0	8213 S / 6 WF OB	299
25.358.3753.0	8213 S / 7 WF OB	299
25.358.3853.0	8213 S / 8 WF OB	299
25.358.3953.0	8213 S / 9 WF OB	299
25.358.4053.0	8213 S / 10 WF OB	299
25.358.4153.0	8213 S / 11 WF OB	299
25.358.4253.0	8213 S / 12 WF OB	299
25.358.4353.0	8213 S / 13 WF OB	299
25.358.4453.0	8213 S / 14 WF OB	299
25.358.4553.0	8213 S / 15 WF OB	299
25.358.4653.0	8213 S / 16 WF OB	299
25.359.3253.0	8213 S / 2 GF OB	298
25.359.3353.0	8213 S / 3 GF OB	298
25.359.3453.0	8213 S / 4 GF OB	298
25.359.3553.0	8213 S / 5 GF OB	298
25.359.3653.0	8213 S / 6 GF OB	298
25.359.3753.0	8213 S / 7 GF OB	298
25.359.3853.0	8213 S / 8 GF OB	298
25.359.3953.0	8213 S / 9 GF OB	298
25.359.4053.0	8213 S / 10 GF OB	298
25.359.4153.0	8213 S / 11 GF OB	298
25.359.4253.0	8213 S / 12 GF OB	298
25.359.4353.0	8213 S / 13 GF OB	298
25.359.4453.0	8213 S / 14 GF OB	298
25.359.4553.0	8213 S / 15 GF OB	298
25.359.4653.0	8213 S / 16 GF OB	298
25.360.0253.0	8313 B / 2	288
25.360.0353.0	8313 B / 3	288
25.360.0453.0	8313 B / 4	288
25.360.0553.0	8313 B / 5	288
25.360.0653.0	8313 B / 6	288
25.360.0753.0	8313 B / 7	288
25.360.0853.0	8313 B / 8	288
25.360.0953.0	8313 B / 9	288
25.360.1053.0	8313 B / 10	288
25.360.1153.0	8313 B / 11	288
25.360.1253.0	8313 B / 12	288
25.360.3253.0	8313 B / 2 OB	288
25.360.3353.0	8313 B / 3 OB	288
25.360.3453.0	8313 B / 4 OB	288
25.360.3553.0	8313 B / 5 OB	288
25.360.3653.0	8313 B / 6 OB	288
25.360.3753.0	8313 B / 7 OB	288
25.360.3853.0	8313 B / 8 OB	288
25.360.3953.0	8313 B / 9 OB	288
25.360.4053.0	8313 B / 10 OB	288
25.360.4153.0	8313 B / 11 OB	288
25.360.4253.0	8313 B / 12 OB	288
25.370.3253.0	8313 S / 2 G OB	300
25.370.3353.0	8313 S / 3 G OB	300
25.370.3453.0	8313 S / 4 G OB	300
25.370.3553.0	8313 S / 5 G OB	300
25.370.3653.0	8313 S / 6 G OB	300
25.370.3753.0	8313 S / 7 G OB	300
25.370.3853.0	8313 S / 8 G OB	300
25.370.3953.0	8313 S / 9 G OB	300
25.370.4053.0	8313 S / 10 G OB	300
25.370.4153.0	8313 S / 11 G OB	300
25.370.4253.0	8313 S / 12 G OB	300
25.372.3253.0	8313 S / 2 W OB	301
25.372.3353.0	8313 S / 3 W OB	301
25.372.3453.0	8313 S / 4 W OB	301
25.372.3553.0	8313 S / 5 W OB	301
25.372.3653.0	8313 S / 6 W OB	301
25.372.3753.0	8313 S / 7 W OB	301
25.372.3853.0	8313 S / 8 W OB	301
25.372.3953.0	8313 S / 9 W OB	301
25.372.4053.0	8313 S / 10 W OB	301
25.372.4153.0	8313 S / 11 W OB	301
25.372.4253.0	8313 S / 12 W OB	301
25.374.2253.0	8313 S / 2 WF OB	301
25.374.2353.0	8313 S / 3 WF OB	301
25.374.2453.0	8313 S / 4 WF OB	301
25.374.2553.0	8313 S / 5 WF OB	301
25.374.2653.0	8313 S / 6 WF OB	301
25.374.2753.0	8313 S / 7 WF OB	301
25.374.2853.0	8313 S / 8 WF OB	301
25.374.2953.0	8313 S / 9 WF OB	301
25.374.3053.0	8313 S / 10 WF OB	301
25.374.3153.0	8313 S / 11 WF OB	301
25.374.3253.0	8313 S / 12 WF OB	301
25.374.6253.0	8313 S / 2 GF OB	300
25.374.6353.0	8313 S / 3 GF OB	300
25.374.6453.0	8313 S / 4 GF OB	300
25.374.6553.0	8313 S / 5 GF OB	300
25.374.6653.0	8313 S / 6 GF OB	300
25.374.6753.0	8313 S / 7 GF OB	300
25.374.6853.0	8313 S / 8 GF OB	300
25.374.6953.0	8313 S / 9 GF OB	300
25.374.7053.0	8313 S / 10 GF OB	300
25.374.7153.0	8313 S / 11 GF OB	300
25.374.7253.0	8313 S / 12 GF OB	300
25.380.0253.0	8413 B / 2	288
25.380.0353.0	8413 B / 3	288
25.380.0453.0	8413 B / 4	288
25.380.0553.0	8413 B / 5	288
25.380.0653.0	8413 B / 6	288
25.380.0753.0	8413 B / 7	288
25.380.0853.0	8413 B / 8	288
25.380.0953.0	8413 B / 9	288
25.380.1053.0	8413 B / 10	288
25.380.1153.0	8413 B / 11	288
25.380.1253.0	8413 B / 12	288
25.380.3253.0	8413 B / 2 OB	288
25.380.3353.0	8413 B / 3 OB	288
25.380.3453.0	8413 B / 4 OB	288
25.380.3553.0	8413 B / 5 OB	288
25.380.3653.0	8413 B / 6 OB	288
25.380.3753.0	8413 B / 7 OB	288
25.380.3853.0	8413 B / 8 OB	288
25.380.3953.0	8413 B / 9 OB	288
25.380.4053.0	8413 B / 10 OB	288
25.380.4153.0	8413 B / 11 OB	288
25.380.4253.0	8413 B / 12 OB	288
25.385.0253.0	8413 B / 2 VR	290
25.385.0353.0	8413 B / 3 VR	290
25.385.0453.0	8413 B / 4 VR	290
25.385.0553.0	8413 B / 5 VR	290
25.385.0653.0	8413 B / 6 VR	290
25.385.0753.0	8413 B / 7 VR	290
25.385.0853.0	8413 B / 8 VR	290
25.385.0953.0	8413 B / 9 VR	290
25.385.1053.0	8413 B / 10 VR	290
25.385.1153.0	8413 B / 11 VR	290
25.385.1253.0	8413 B / 12 VR	290
25.385.2253.0	8413 B / 2 VR OB	290
25.385.2353.0	8413 B / 3 VR OB	290
25.385.2453.0	8413 B / 4 VR OB	290
25.385.2553.0	8413 B / 5 VR OB	290
25.385.2653.0	8413 B / 6 VR OB	290
25.385.2753.0	8413 B / 7 VR OB	290
25.385.2853.0	8413 B / 8 VR OB	290
25.385.2953.0	8413 B / 9 VR OB	290
25.385.3053.0	8413 B / 10 VR OB	290
25.385.3153.0	8413 B / 11 VR OB	290
25.385.3253.0	8413 B / 12 VR OB	290
25.386.0253.0	8413 B / 2 VL	290
25.386.0353.0	8413 B / 3 VL	290
25.386.0453.0	8413 B / 4 VL	290
25.386.0553.0	8413 B / 5 VL	290
25.386.0653.0	8413 B / 6 VL	290
25.386.0753.0	8413 B / 7 VL	290
25.386.0853.0	8413 B / 8 VL	290
25.386.0953.0	8413 B / 9 VL	290
25.386.1053.0	8413 B / 10 VL	290
25.386.1153.0	8413 B / 11 VL	290
25.386.1253.0	8413 B / 12 VL	290
25.386.2253.0	8413 B / 2 VL OB	290
25.386.2353.0	8413 B / 3 VL OB	290
25.386.2453.0	8413 B / 4 VL OB	290
25.386.2553.0	8413 B / 5 VL OB	290
25.386.2653.0	8413 B / 6 VL OB	290
25.386.2753.0	8413 B / 7 VL OB	290
25.386.2853.0	8413 B / 8 VL OB	290
25.386.2953.0	8413 B / 9 VL OB	290
25.386.3053.0	8413 B / 10 VL OB	290
25.386.3153.0	8413 B / 11 VL OB	290
25.386.3253.0	8413 B / 12 VL OB	290
25.390.3253.0	8413 S / 2 G OB	300
25.390.3353.0	8413 S / 3 G OB	300
25.390.3453.0	8413 S / 4 G OB	300
25.390.3553.0	8413 S / 5 G OB	300
25.390.3653.0	8413 S / 6 G OB	300
25.390.3753.0	8413 S / 7 G OB	300
25.390.3853.0	8413 S / 8 G OB	300
25.390.3953.0	8413 S / 9 G OB	300
25.390.4053.0	8413 S / 10 G OB	300
25.390.4153.0	8413 S / 11 G OB	300
25.390.4253.0	8413 S / 12 G OB	300
25.392.3253.0	8413 S / 2 W OB	301
25.392.3353.0	8413 S / 3 W OB	301
25.392.3453.0	8413 S / 4 W OB	301
25.392.3553.0	8413 S / 5 W OB	301
25.392.3653.0	8413 S / 6 W OB	301
25.392.3753.0	8413 S / 7 W OB	301
25.392.3853.0	8413 S / 8 W OB	301
25.392.3953.0	8413 S / 9 W OB	301
25.392.4053.0	8413 S / 10 W OB	301
25.392.4153.0	8413 S / 11 W OB	301
25.392.4253.0	8413 S / 12 W OB	301
25.394.3253.0	8113 S / 2 S OB GR	302
25.394.3353.0	8113 S / 3 S OB GR	302
25.394.3453.0	8113 S / 4 S OB GR	302
25.394.3553.0	8113 S / 5 S OB GR	302
25.394.3653.0	8113 S / 6 S OB GR	302
25.394.3753.0	8113 S / 7 S OB GR	302
25.394.3853.0	8113 S / 8 S OB GR	302
25.394.3953.0	8113 S / 9 S OB GR	302
25.394.4053.0	8113 S / 10 S OB GR	302
25.394.4153.0	8113 S / 11 S OB GR	302
25.394.4253.0	8113 S / 12 S OB GR	302
25.394.4353.0	8113 S / 13 S OB GR	302
25.394.4453.0	8113 S / 14 S OB GR	302
25.394.4553.0	8113 S / 15 S OB GR	302
25.394.4653.0	8113 S / 16 S OB GR	302
25.395.3253.0	8113 S / 2 S1 OB GR	302
25.395.3353.0	8113 S / 3 S1 OB	302
25.395.3453.0	8113 S / 4 S1 OB	302
25.395.3553.0	8113 S / 5 S1 OB	302
25.395.3653.0	8113 S / 6 S1 OB	302
25.395.3753.0	8113 S / 7 S1 OB	302
25.395.3853.0	8113 S / 8 S1 OB	302
25.395.3953.0	8113 S / 9 S1 OB	302
25.395.4053.0	8113 S / 10 S1 OB	302
25.395.4153.0	8113 S / 11 S1 OB	302
25.395.4253.0	8113 S / 12 S1 OB GR	302
25.395.4353.0	8113 S / 13 S1 OB	302
25.395.4453.0	8113 S / 14 S1 OB	302

contents

Part no.	Type	section / page
25.395.4553.0	8113 S / 15 S1 OB	302
25.395.4653.0	8113 S / 16 S1 OB	302
25.396.3253.0	8213 S / 2 S OB GR	302
25.396.3353.0	8213 S / 3 S OB GR	302
25.396.3453.0	8213 S / 4 S OB GR	302
25.396.3553.0	8213 S / 5 S OB GR	302
25.396.3653.0	8213 S / 6 S OB GR	302
25.396.3753.0	8213 S / 7 S OB GR	302
25.396.3853.0	8213 S / 8 S OB GR	302
25.396.3953.0	8213 S / 9 S OB GR	302
25.396.4053.0	8213 S / 10 S OB GR	302
25.396.4153.0	8213 S / 11 S OB GR	302
25.396.4253.0	8213 S / 12 S OB GR	302
25.396.4353.0	8213 S / 13 S OB GR	302
25.396.4453.0	8213 S / 14 S OB GR	302
25.396.4553.0	8213 S / 15 S OB GR	302
25.396.4653.0	8213 S / 16 S OB GR	302
25.397.3253.0	8213 S / 2 S1 OB GR	302
25.397.3353.0	8213 S / 3 S1 OB GR	302
25.397.3453.0	8213 S / 4 S1 OB GR	302
25.397.3553.0	8213 S / 5 S1 OB GR	302
25.397.3653.0	8213 S / 6 S1 OB GR	302
25.397.3753.0	8213 S / 7 S1 OB GR	302
25.397.3853.0	8213 S / 8 S1 OB GR	302
25.397.3953.0	8213 S / 9 S1 OB GR	302
25.397.4053.0	8213 S / 10 S1 OB GR	302
25.397.4153.0	8213 S / 11 S1 OB GR	302
25.397.4253.0	8213 S / 12 S1 OB GR	302
25.397.4353.0	8213 S / 13 S1 OB GR	302
25.397.4453.0	8213 S / 14 S1 OB GR	302
25.397.4553.0	8213 S / 15 S1 OB GR	302
25.397.4653.0	8213 S / 16 S1 OB GR	302
25.398.2253.0	8413 S / 2 WF OB	301
25.398.2353.0	8413 S / 3 WF OB	301
25.398.2453.0	8413 S / 4 WF OB	301
25.398.2553.0	8413 S / 5 WF OB	301
25.398.2653.0	8413 S / 6 WF OB	301
25.398.2753.0	8413 S / 7 WF OB	301
25.398.2853.0	8413 S / 8 WF OB	301
25.398.2953.0	8413 S / 9 WF OB	301
25.398.3053.0	8413 S / 10 WF OB	301
25.398.3153.0	8413 S / 11 WF OB	301
25.398.3253.0	8413 S / 12 WF OB	301
25.398.6253.0	8413 S / 2 GF OB	300
25.398.6353.0	8413 S / 3 GF OB	300
25.398.6453.0	8413 S / 4 GF OB	300
25.398.6553.0	8413 S / 5 GF OB	300
25.398.6653.0	8413 S / 6 GF OB	300
25.398.6753.0	8413 S / 7 GF OB	300
25.398.6853.0	8413 S / 8 GF OB	300
25.398.6953.0	8413 S / 9 GF OB	300
25.398.7053.0	8413 S / 10 GF OB	300
25.398.7153.0	8413 S / 11 GF OB	300
25.398.7253.0	8413 S / 12 GF OB	300
25.399.9853.0	8113 BSK /2 0,75 OB	392
25.399.9853.5	8113 B / 2 SK0.75 OB	392
25.399.9853.8	8113 B / 2 SK0.75 OB	392
25.470.0253.0	8520 B / 2 OB	324
25.470.0353.0	8520 B / 3 OB	324
25.470.0453.0	8520 B / 4 OB	324
25.470.0553.0	8520 B / 5 OB	324
25.470.0653.0	8520 B / 6 OB	324
25.470.0753.0	8520 B / 7 OB	324
25.470.0853.0	8520 B / 8 OB	324
25.470.0953.0	8520 B / 9 OB	324
25.470.1053.0	8520 B / 10 OB	324
25.470.1153.0	8520 B / 11 OB	324
25.470.1253.0	8520 B / 12 OB	324
25.470.1353.0	8520 B / 13 OB	324
25.470.1453.0	8520 B / 14 OB	324
25.470.1553.0	8520 B / 15 OB	324
25.470.1653.0	8520 B / 16 OB	324
25.470.3253.0		324
25.470.3353.0	8520 B / 3	324
25.470.3453.0		324
25.470.3553.0		324
25.470.3653.0		324
25.470.3753.0	8520 B / 7	324
25.470.3853.0	8520 B / 8	324
25.470.3953.0		324
25.470.4053.0		324
25.470.4153.0	8520 B / 11	324
25.470.4253.0		324
25.470.4353.0	8520 B / 13	324
25.470.4453.0	8520 B / 14	324
25.470.4553.0	8520 B / 15	324
25.470.4653.0	8520 B / 16	324
25.471.0253.0	8520 BL / 2 W OB	325
25.471.0353.0	8520 BL / 3 W OB	325
25.471.0453.0		325
25.471.0553.0		325
25.471.0653.0		325
25.471.0753.0	8520 BL / 7 W OB	325
25.471.0853.0		325
25.471.0953.0		325
25.471.1053.0		325
25.471.1153.0	8520 BL / 11 W OB	325
25.471.1253.0		325
25.471.1353.0	8520 BL / 13 W OB	325
25.471.1453.0	8520 BL / 14 W OB	325
25.471.1553.0	8520 BL / 15 W OB	325
25.471.1653.0		325
25.471.3253.0		325
25.471.3353.0		325
25.471.3453.0		325
25.471.3553.0		325
25.471.3653.0	8520 BL / 6 W	325
25.471.3753.0	8520 BL / 7 W	325
25.471.3853.0		325
25.471.3953.0		325
25.471.4053.0		325
25.471.4153.0	8520 BL / 11 W	325
25.471.4253.0		325
25.471.4353.0	8520 BL / 13 W	325
25.471.4453.0	8520 BL / 14 W	325
25.471.4553.0	8520 BL / 15 W	325
25.471.4653.0	8520 BL / 16 W	325
25.472.0253.0		325
25.472.0353.0	8520 BL / 3 G OB	325
25.472.0453.0	8520 BL / 4 G OB	325
25.472.0553.0		325
25.472.0653.0	8520 BL / 6 G OB	325
25.472.0753.0	8520 BL / 7 G OB	325
25.472.0853.0		325
25.472.0953.0		325
25.472.1053.0		325
25.472.1153.0	8520 BL / 11 G OB	325
25.472.1253.0		325
25.472.1353.0	8520 BL / 13 G OB	325
25.472.1453.0	8520 BL / 14 G OB	325
25.472.1553.0	8520 BL / 15 G OB	325
25.472.1653.0		325
25.472.3253.0		325
25.472.3353.0		325
25.472.3453.0		325
25.472.3553.0		325
25.472.3653.0		325
25.472.3753.0	8520 BL / 7 G	325
25.472.3853.0		325
25.472.3953.0		325
25.472.4053.0		325
25.472.4153.0	8520 BL / 11 G	325
25.472.4253.0		325
25.472.4353.0	8520 BL / 13 G	325
25.472.4453.0	8520 BL / 14 G	325
25.472.4553.0	8520 BL / 15 G	325
25.472.4653.0	8520 BL / 16 G	325
25.500.0253.0	8134 / 2	360
25.500.0353.0	8134 / 3	360
25.500.0453.0	8134 / 4	360
25.500.0553.0	8134 / 5	360
25.500.0653.0	8134 / 6	360
25.500.0753.0	8134 / 7	360
25.500.0853.0	8134 / 8	360
25.500.0953.0	8134 / 9	360
25.500.1053.0	8134 / 10	360
25.500.1153.0	8134 / 11	360
25.500.1253.0	8134 / 12	360
25.500.1353.0	8134 / 13	360
25.500.1453.0	134/ 14	360
25.500.1553.0	8134 / 15	360
25.500.1653.0	8134 / 16	360
25.500.6253.0	8134 / 2 ZN	360
25.500.6353.0	8134 / 3 ZN	360
25.501.0253.0	8134 / 2 OB	360
25.501.0353.0	8134 / 3 OB	360
25.501.0453.0	8134 / 4 OB	360
25.501.0553.0	8134 / 5 OB	360
25.501.0653.0	8134 / 6 OB	360
25.501.0753.0	8134 / 7 OB	360
25.501.0853.0	8134 / 8 OB	360
25.501.0953.0	8134 / 9 OB	360
25.501.1053.0	8134 / 10 OB	360
25.501.1153.0	8134 / 11 OB	360
25.501.1253.0	8134 / 12 OB	360
25.501.1353.0	8134 / 13 OB	360
25.501.1453.0	8134 / 14 OB	360
25.501.1553.0	8134 / 15 OB	360
25.501.1653.0	8134 / 16 OB	360
25.501.6253.0	8134 / 2 ZN OB	360
25.501.6353.0	8134 / 3 ZN OB	360
25.502.0253.0	8234 / 2	360
25.502.0353.0	8234 / 3	360
25.502.0453.0	8234 / 4	360
25.502.0553.0	8234 / 5	360
25.502.0653.0	8234 / 6	360
25.502.0753.0	8234 / 7	360
25.502.0853.0	8234 / 8	360
25.502.0953.0	8234 / 9	360
25.502.1053.0	8234 / 10	360
25.502.1153.0	8234 / 11	360
25.502.1253.0	8234 / 12	360
25.502.1353.0	8234 / 13	360
25.502.1453.0	8234 / 14	360
25.502.1553.0	8234 / 15	360
25.502.1653.0	8234 / 16	360
25.502.6253.0	8234 / 2 ZN	360
25.502.6353.0	8234 / 3 ZN	360
25.503.0253.0	8234 / 2 OB	360
25.503.0353.0	8234 / 3 OB	360
25.503.0453.0	8234 / 4 OB	360
25.503.0553.0	8234 / 5 OB	360
25.503.0653.0	8234 / 6 OB	360
25.503.0753.0	8234 / 7 OB	360
25.503.0853.0	8234 / 8 OB	360
25.503.0953.0	8234 / 9 OB	360
25.503.1053.0	8234 / 10 OB	360
25.503.1153.0	8234 / 11 OB	360
25.503.1253.0	8234 / 12 OB	360
25.503.1353.0	8234 / 13 OB	360
25.503.1453.0	8234 / 14 OB	360
25.503.1553.0	8234 / 15 OB	360
25.503.1653.0	8234 / 16 OB	360
25.503.6253.0	8234 / 2 ZN OB	360
25.503.6353.0	8234 / 3 ZN OB	360
25.520.0253.0	8135 / 2	362
25.520.0353.0	8135 / 3	362
25.520.0453.0	8135 / 4	362
25.520.0553.0	8135 / 5	362
25.520.0653.0	8135 / 6	362
25.520.0753.0	8135 / 7	362
25.520.0853.0	8135 / 8	362
25.520.0953.0	8135 / 9	362
25.520.1053.0	8135 / 10	362
25.520.1153.0	8135 / 11	362
25.520.1253.0	8135 / 12	362
25.520.1353.0	8135 / 13	362
25.520.1453.0	8135 / 14	362
25.520.1553.0	8135 / 15	362
25.520.1653.0	8135 / 16	362
25.520.6253.0	8135 / 2 ZN	362
25.520.6353.0	8135 / 3 ZN	362
25.521.0253.0	8135 / 2 OB	362
25.521.0353.0	8135 / 3 OB	362
25.521.0453.0	8135 / 4 OB	362
25.521.0553.0	8135 / 5 OB	362
25.521.0653.0	8135 / 6 OB	362
25.521.0753.0	8135 / 7 OB	362
25.521.0853.0	8135 / 8 OB	362
25.521.0953.0	8135 / 9 OB	362
25.521.1053.0	8135 / 10 OB	362
25.521.1153.0	8135 / 11 OB	362
25.521.1253.0	8135 / 12 OB	362
25.521.1353.0	8135 / 13 OB	362
25.521.1453.0	8135 / 14 OB	362
25.521.1553.0	8135 / 15 OB	362
25.521.1653.0	8135 / 16 OB	362
25.521.6253.0	8135 / 2 ZN OB	362
25.521.6353.0	8135 / 3 ZN OB	362
25.522.0253.0	8235 / 2	362
25.522.0353.0	8235 / 3	362
25.522.0453.0	8235 / 4	362
25.522.0553.0	8235 / 5	362
25.522.0653.0	8235 / 6	362
25.522.0753.0	8235 / 7	362
25.522.0853.0	8235 / 8	362
25.522.0953.0	8235 / 9	362
25.522.1053.0	8235 / 10	362
25.522.1153.0	8235 / 11	362
25.522.1253.0	8235 / 12	362
25.522.1353.0	8235 / 13	362
25.522.1453.0	8235 / 14	362
25.522.1553.0	8235 / 15	362
25.522.1653.0	8235 / 16	362
25.522.6253.0	8235 / 2 ZN	362
25.522.6353.0	8235 / 3 ZN	362
25.523.0253.0	8235 / 2 OB	362
25.523.0353.0	8235 / 3 OB	362
25.523.0453.0	8235 / 4 OB	362
25.523.0553.0	8235 / 5 OB	362
25.523.0653.0	8235 / 6 OB	362
25.523.0753.0	8235 / 7 OB	362
25.523.0853.0	8235 / 8 OB	362
25.523.0953.0	8235 / 9 OB	362
25.523.1053.0	8235 / 10 OB	362
25.523.1153.0	8235 / 11 OB	362
25.523.1253.0	8235 / 12 OB	362
25.523.1353.0	8235 / 13 OB	362
25.523.1453.0	8235 / 14 OB	362
25.523.1553.0	8235 / 15 OB	362
25.523.1653.0	8235 / 16 OB	362
25.523.6253.0	8235 / 2 ZN OB	362
25.523.6353.0	8235 / 3 ZN OB	362
25.600.2253.0	8142 / 2	318
25.600.2353.0	8142 / 3	318

contents of part number

contents PART NUMBER

Part no.	Type	section / page
25.600.2453.0	8142 / 4	318
25.600.2553.0	8142 / 5	318
25.600.2653.0	8142 / 6	318
25.600.2753.0	8142 / 7	318
25.600.2853.0	8142 / 8	318
25.600.2953.0	8142 / 9	318
25.600.3053.0	8142 / 10	318
25.600.3153.0	8142 / 11	318
25.600.3253.0	8142 / 12	318
25.600.3353.0	8142 / 13	318
25.600.3453.0	8142 / 14	318
25.600.3553.0	8142 / 15	318
25.600.3653.0	8142 / 16	318
25.600.5253.0	8543 / 2	316
25.600.5353.0	8543 / 3	316
25.600.5453.0	8543 / 4	316
25.600.5553.0	8543 / 5	316
25.600.5653.0	8543 / 6	316
25.600.5753.0	8543 / 7	316
25.600.5853.0	8543 / 8	316
25.600.5953.0	8543 / 9	316
25.600.6053.0	8543 / 10	316
25.600.6153.0	8543 / 11	316
25.600.6253.0	8543 / 12	316
25.600.6353.0	8543 / 13	316
25.600.6453.0	8543 / 14	316
25.600.6553.0	8543 / 15	316
25.600.6653.0	8543 / 16	316
25.601.1253.0	8142 / 4 / 2	318
25.601.1353.0	8142 / 6 / 3	318
25.601.1453.0	8142 / 8 / 4	318
25.601.1553.0	8142 / 10 / 5	318
25.601.1653.0	8142 / 12 / 6	318
25.601.1753.0	8142 / 14 / 7	318
25.601.1853.0	8142 / 16 / 8	318
25.602.2253.0	8142 / 2 OB	318
25.602.2353.0	8142 / 3 OB	318
25.602.2453.0	8142 / 4 OB	318
25.602.2553.0	8142 / 5 OB	318
25.602.2653.0	8142 / 6 OB	318
25.602.2753.0	8142 / 7 OB	318
25.602.2853.0	8142 / 8 OB	318
25.602.2953.0	8142 / 9 OB	318
25.602.3053.0	8142 / 10 OB	318
25.602.3153.0	8142 / 11 OB	318
25.602.3253.0	8142 / 12 OB	318
25.602.3353.0	8142 / 13 OB	318
25.602.3453.0	8142 / 14 OB	318
25.602.3553.0	8142 / 15 OB	318
25.602.3653.0	8142 / 16 OB	318
25.602.5253.0	8543 / 2 OB	316
25.602.5353.0	8543 / 3 OB	316
25.602.5453.0	8543 / 4 OB	316
25.602.5553.0	8543 / 5 OB	316
25.602.5653.0	8543 / 6 OB	316
25.602.5753.0	8543 / 7 OB	316
25.602.5853.0	8543 / 8 OB	316
25.602.5953.0	8543 / 9 OB	316
25.602.6053.0	8543 / 10 OB	316
25.602.6153.0	8543 / 11 OB	316
25.602.6253.0	8543 / 12 OB	316
25.602.6353.0	8543 / 13 OB	316
25.602.6453.0	8543 / 14 OB	316
25.602.6553.0	8543 / 15 OB	316
25.602.6653.0	8543 / 16 OB	316
25.603.1253.0	8142 / 4 / 2 OB	318
25.603.1353.0	8142 / 6 / 3 OB	318
25.603.1453.0	8142 / 8 / 4 OB	318
25.603.1553.0	8142 / 10 / 5 OB	318
25.603.1653.0	8142 / 12 / 6 OB	318
25.603.1753.0	8142 / 14 / 7 OB	318
25.603.1853.0	8142 / 16 / 8 OB	318
25.620.0253.0	8813 B / 2	280
25.620.0353.0	8813 B / 3	280
25.620.0453.0	8813 B / 4	280
25.620.0553.0	8813 B / 5	280
25.620.0653.0	8813 B / 6	280
25.620.0753.0	8813 B / 7	280
25.620.0853.0	8813 B / 8	280
25.620.0953.0	8813 B / 9	280
25.620.1053.0	8813 B / 10	280
25.620.1153.0	8813 B / 11	280
25.620.1253.0	8813 B / 12	280
25.620.1353.0	8813 B / 13	280
25.620.1453.0	8813 B / 14	280
25.620.1553.0	8813 B / 15	280
25.620.1653.0	8813 B / 16	280
25.620.3253.0	8813 B / 2 OB	280
25.620.3353.0	8813 B / 3 OB	280
25.620.3453.0	8813 B / 4 OB	280
25.620.3553.0	8813 B / 5 OB	280
25.620.3653.0	8813 B / 6 OB	280
25.620.3753.0	8813 B / 7 OB	280
25.620.3853.0	8813 B / 8 OB	280
25.620.3953.0	8813 B / 9 OB	280
25.620.4053.0	8813 B / 10 OB	280
25.620.4153.0	8813 B / 11 OB	280
25.620.4253.0	8813 B / 12 OB	280
25.620.4353.0	8813 B / 13 OB	280
25.620.4453.0	8813 B / 14 OB	280
25.620.4553.0	8813 B / 15 OB	280
25.620.4653.0	8813 B / 16 OB	280
25.621.0253.0	8813 B / 2 F	280
25.621.0353.0	8813 B / 3 F	280
25.621.0453.0	8813 B / 4 F	280
25.621.0553.0	8813 B / 5 F	280
25.621.0653.0	8813 B / 6 F	280
25.621.0753.0	8813 B / 7 F	280
25.621.0853.0	8813 B / 8 F	280
25.621.0953.0	8813 B / 9 F	280
25.621.1053.0	8813 B / 10 F	280
25.621.1153.0	8813 B / 11 F	280
25.621.1253.0	8813 B / 12 F	280
25.621.1353.0	8813 B / 13 F	280
25.621.1453.0	8813 B / 14 F	280
25.621.1553.0	8813 B / 15 F	280
25.621.1653.0	8813 B / 16 F	280
25.621.3253.0	8813 B / 2 F OB	280
25.621.3353.0	8813 B / 3 F OB	280
25.621.3453.0	8813 B / 4 F OB	280
25.621.3553.0	8813 B / 5 F OB	280
25.621.3653.0	8813 B / 6 F OB	280
25.621.3753.0	8813 B / 7 F OB	280
25.621.3853.0	8813 B / 8 F OB	280
25.621.3953.0	8813 B / 9 F OB	280
25.621.4053.0	8813 B / 10 F OB	280
25.621.4153.0	8813 B / 11 F OB	280
25.621.4253.0	8813 B / 12 F OB	280
25.621.4353.0	8813 B / 13 F OB	280
25.621.4453.0	8813 B / 14 F OB	280
25.621.4553.0	8813 B / 15 F OB	280
25.621.4653.0	8813 B / 16 F OB	280
25.622.0253.0	8813 B / 2 VR	282
25.622.0353.0	8813 B / 3 VR	282
25.622.0453.0	8813 B / 4 VR	282
25.622.0553.0	8813 B/ 5 VR	282
25.622.0653.0	8813 B / 6 VR	282
25.622.0753.0	8813 B / 7 VR	282
25.622.0853.0	8813 B / 8 VR	282
25.622.0953.0	8813 B / 9 VR	282
25.622.1053.0	8813 B / 10 VR	282
25.622.1153.0	8813 B / 11 VR	282
25.622.1253.0	8813 B / 12 VR	282
25.622.1353.0	8813 B / 13 VR	282
25.622.1453.0	8813 B / 14 VR	282
25.622.1553.0	8813 B / 15 VR	282
25.622.1653.0	8813 B / 16 VR	282
25.622.3253.0	8813 B / 2 VR OB	282
25.622.3353.0	8813 B / 3 VR OB	282
25.622.3453.0	8813 B / 4 VR OB	282
25.622.3553.0	8813 B / 5 VR OB	282
25.622.3653.0	8813 B / 6 VR OB	282
25.622.3753.0	8813 B / 7 VR OB	282
25.622.3853.0	8813 B / 8 VR OB	282
25.622.3953.0	8813 B / 9 VR OB	282
25.622.4053.0	8813 B / 10 VR OB	282
25.622.4153.0	8813 B / 11 VR OB	282
25.622.4253.0	8813 B / 12 VR OB	282
25.622.4353.0	8813B / 13 VR OB	282
25.622.4453.0	8813 B / 14 VR OB	282
25.622.4553.0	8813 B / 15 VR OB	282
25.622.4653.0	8813 B / 16 VR OB	282
25.623.0253.0	8813 B / 2 VR F	283
25.623.0353.0	8813 B / 3 VR F	283
25.623.0453.0	8813 B / 4 VR F	283
25.623.0553.0	8813 B / 5 VR F	283
25.623.0653.0	8813 B / 6 VR F	283
25.623.0753.0	8813 B / 7 VR F	283
25.623.0853.0	8813 B / 8 VR F	283
25.623.0953.0	8813 B / 9 VR F	283
25.623.1053.0	8813 B / 10 VR F	283
25.623.1153.0	8813 B / 11 VR F	283
25.623.1253.0	8813 B / 12 VR F	283
25.623.1353.0	8813 B / 13 VR F	283
25.623.1453.0	8813 B / 14 VR F	283
25.623.1553.0	8813 B / 15 VR F	283
25.623.3253.0	8813 B / 2 VR F OB	283
25.623.3353.0	8813 B / 3 VR F OB	283
25.623.3453.0	8813 B / 4 VR F OB	283
25.623.3553.0	8813 B / 5 VR F OB	283
25.623.3653.0	8813 B / 6 VR F OB	283
25.623.3753.0	8813 B / 7 VR F OB	283
25.623.3853.0	8813 B / 8 VR F OB	283
25.623.3953.0	8813 B / 9 VR F OB	283
25.623.4053.0	8813 B / 10 VR F OB	283
25.623.4153.0	8813 B / 11 VR F OB	283
25.623.4253.0	8813 B / 12 VR F OB	283
25.623.4353.0	8813 B / 13 VR F OB	283
25.623.4453.0	8813 B / 14 VR F OB	283
25.623.4553.0	8813 B / 15 VR F OB	283
25.623.4653.0	8813 B / 16 VR F OB	283
25.624.0253.0	8813 B / 2 VL	282
25.624.0353.0	8813 B / 3 VL	282
25.624.0453.0	8813 B / 4 VL	282
25.624.0553.0	8813 B / 5 VL	282
25.624.0653.0	8813 B / 6 VL	282
25.624.0753.0	8813 B / 7 VL	282
25.624.0853.0	8813 B / 8 VL	282
25.624.0953.0	8813 B / 9 VL	282
25.624.1053.0	8813 B / 10 VL	282
25.624.1153.0	8813 B / 11 VL	282
25.624.1253.0	8813 B / 12 VL	282
25.624.1353.0	8813 B / 13 VL	282
25.624.1453.0	8813 B / 14 VL	282
25.624.1553.0	8813 B / 15 VL	282
25.624.1653.0	8813 B / 16 VL	282
25.624.3253.0	8813 B / 2 VL OB	282
25.624.3353.0	8813 B / 3 VL OB	282
25.624.3453.0	8813 B / 4 VL OB	282
25.624.3553.0	8813 B / 5 VL OB	282
25.624.3653.0	8813 B / 6 VL OB	282
25.624.3753.0	8813 B / 7 VL OB	282
25.624.3853.0	8813 B / 8 VL OB	282
25.624.3953.0	8813 B / 9 VL OB	282
25.624.4053.0	8813 B / 10 VL OB	282
25.624.4153.0	8813 B / 11 VL OB	282
25.624.4253.0	8813 B / 12 VL OB	282
25.624.4353.0	8813 B / 13 VL OB	282
25.624.4453.0	8813 B / 14 VL OB	282
25.624.4553.0	8813 B / 15 VL OB	282
25.624.4653.0	8813 B / 16 VL OB	282
25.625.0253.0	8813 B / 2 VL F	283
25.625.0353.0	8813 B / 3 VL F	283
25.625.0453.0	8813 B / 4 VL F	283
25.625.0553.0	8813 B / 5 VL F	283
25.625.0653.0	8813 B / 6 VL F	283
25.625.0753.0	8813 B / 7 VL F	283
25.625.0853.0	8813 B / 8 VL F	283
25.625.0953.0	8813 B / 9 VL F	283
25.625.1053.0	8813 B / 10 VL F	283
25.625.1153.0	8813 B / 11 VL F	283
25.625.1253.0	8813 B / 12 VL F	283
25.625.1353.0	8813 B / 13 VL F	283
25.625.1453.0	8813 B / 14 VL F	283
25.625.1553.0	8813 B / 15 VL F	283
25.625.1653.0	8813 B / 16 VL F	283
25.625.3253.0	8813 B / 2 VL F OB	283
25.625.3353.0	8813 B / 3 VL F OB	283
25.625.3453.0	8813 B / 4 VL F OB	283
25.625.3553.0	8813 B / 5 VL F OB	283
25.625.3653.0	8813 B / 6 VL F OB	283
25.625.3753.0	8813 B / 7 VL F OB	283
25.625.3853.0	8813 B / 8 VL F OB	283
25.625.3953.0	8813 B / 9 VL F OB	283
25.625.4053.0	8813 B / 10 VL F OB	283
25.625.4153.0	8813 B / 11 VL F OB	283
25.625.4253.0	8813 B / 12 VL F OB	283
25.625.4353.0	8813 B / 13 VL F OB	283
25.625.4453.0	8813 B / 14 VL F OB	283
25.625.4553.0	8813 B / 15 VL F OB	283
25.625.4653.0	8813 B / 16 VL F OB	283
25.626.0253.0	8813 S / 2 G	284
25.626.0353.0	8813 S / 3 G	284
25.626.0453.0	8813 S / 4 G	284
25.626.0553.0	8813 S / 5 G	284
25.626.0653.0	8813 S / 6 G	284
25.626.0753.0	8813 S / 7 G	284
25.626.0853.0	8813 S / 8 G	284
25.626.0953.0	8813 S / 9 G	284
25.626.1053.0	8813 S / 10 G	284
25.626.1153.0	8813 S / 11 G	284
25.626.1253.0	8813 S / 12 G	284
25.626.1353.0	8813 S / 13 G	284
25.626.1453.0	8813 S / 14 G	284
25.626.1553.0	8813 S / 15 G	284
25.626.1653.0	8813 S / 16 G	284
25.626.3253.0	8813 S / 2 GF	285
25.626.3353.0	8813 S / 3 GF	285
25.626.3453.0	8813 S / 4 GF	285
25.626.3553.0	8813 S / 5 GF	285
25.626.3653.0	8813 S / 6 GF	285
25.626.3753.0	8813 S / 7 GF	285
25.626.3853.0	8813 S / 8 GF	285
25.626.3953.0	8813 S / 9 GF	285
25.626.4053.0	8813 S / 10 GF	285
25.626.4153.0	8813 S / 11 GF	285
25.626.4253.0	8813 S / 12 GF	285
25.626.4353.0	8813 S / 13 GF	285
25.626.4453.0	8813 S / 14 GF	285
25.626.4553.0	8813 S / 15 GF	285
25.626.4653.0	8813 S / 16 GF	285
25.627.0253.0	8813 S / 2 W	284
25.627.0353.0	8813 S / 3 W	284
25.627.0453.0	8813 S / 4 W	284
25.627.0553.0	8813 S / 5 W	284

contents

Part no.	Type	section / page
25.627.0653.0	8813 S / 6 W	284
25.627.0753.0	8813 S / 7 W	284
25.627.0853.0	8813 S / 8 W	284
25.627.0953.0	8813 S / 9 W	284
25.627.1053.0	8813 S / 10 W	284
25.627.1153.0	8813 S / 11 W	284
25.627.1253.0	8813 S / 12 W	284
25.627.1353.0	8813 S / 13 W	284
25.627.1453.0	8813 S / 14 W	284
25.627.1553.0	8813 S / 15 W	284
25.627.1653.0	8813 S / 16 W	284
25.627.3253.0	8813 S / 2 WF	285
25.627.3353.0	8813 S / 3 WF	285
25.627.3453.0	8813 S / 4 WF	285
25.627.3553.0	8813 S / 5 WF	285
25.627.3653.0	8813 S / 6 WF	285
25.627.3753.0	8813 S / 7 WF	285
25.627.3853.0	8813 S / 8 WF	285
25.627.3953.0	8813 S / 9 WF	285
25.627.4053.0	8813 S / 10 WF	285
25.627.4153.0	8813 S / 11 WF	285
25.627.4253.0	8813 S / 12 WF	285
25.627.4353.0	8813 S / 13 WF	285
25.627.4453.0	8813 S / 14 WF	285
25.627.4553.0	8813 S / 15 WF	285
25.627.4653.0	8813 S / 16 WF	285
25.630.0253.0	8513 BFK/ 2 TOP	281
25.630.0353.0	8513 BFK/ 3 TOP	281
25.630.0453.0	8513 BFK/ 4 TOP	281
25.630.0553.0	8513 BFK/ 5 TOP	281
25.630.0653.0	8513 BFK/ 6 TOP	281
25.630.0753.0	8513 BFK/ 7 TOP	281
25.630.0853.0	8513 BFK/ 8 TOP	281
25.630.0953.0	8513 BFK/ 9 TOP	281
25.630.1053.0	8513 BDK/10 TOP	281
25.630.1153.0	8513 BFK/11 TOP	281
25.630.1253.0	8513 BFK/12 TOP	281
25.630.1353.0	8513 BFK/13 TOP	281
25.630.1453.0	8513 BFK/14 TOP	281
25.630.1553.0	8513 BFK/15 TOP	281
25.630.1653.0	8513 BFK/16 TOP	281
25.630.3253.0	8513 BFK/ 2 TOP OB	281
25.630.3353.0	8513 BFK/ 3 TOP OB	281
25.630.3453.0	8513 BFK/ 4 TOP OB	281
25.630.3553.0	8513 BFK/ 5 TOP OB	281
25.630.3653.0	8513 BFK/ 6 TOP OB	281
25.630.3753.0	8513 BFK/ 7 TOP OB	281
25.630.3853.0	8513 BFK/ 8 TOP OB	281
25.630.3953.0	8513 BFK/ 9 TOP OB	281
25.630.4053.0	8513 BFK/10 TOP OB	281
25.630.4153.0	8513 BFK/11 TOP OB	281
25.630.4253.0	8513 BFK/12 TOP OB	281
25.630.4353.0	8513 BFK/13 TOP OB	281
25.630.4453.0	8513 BFK/14 TOP OB	281
25.630.4553.0	8513 BFK/15 TOP OB	281
25.630.4653.0	8513 BFK/16 TOP OB	281
25.640.0253.0	8513 B / 2	280
25.640.0353.0	8513 B / 3	280
25.640.0453.0	8513 B / 4	280
25.640.0553.0	8513 B / 5	280
25.640.0653.0	8513 B / 6	280
25.640.0753.0	8513 B / 7	280
25.640.0853.0	8513 B / 8	280
25.640.0953.0	8513 B / 9	280
25.640.1053.0	8513 B / 10	280
25.640.1153.0	8513 B / 11	280
25.640.1253.0	8513 B / 12	280
25.640.1353.0	8513 B / 13	280
25.640.1453.0	8513 B / 14	280
25.640.1553.0	8513 B / 15	280
25.640.1653.0	8513 B / 16	280
25.640.3253.0	8513 B / 2 OB	280
25.640.3353.0	8513 B / 3 OB	280
25.640.3453.0	8513 B / 4 OB	280
25.640.3553.0	8513 B / 5 OB	280
25.640.3653.0	8513 B / 6 OB	280
25.640.3753.0	8513 B / 7 OB	280
25.640.3853.0	8513 B / 8 OB	280
25.640.3953.0	8513 B / 9 OB	280
25.640.4053.0	8513 B / 10 OB	280
25.640.4153.0	8513 B / 11 OB	280
25.640.4253.0	8513 B / 12 OB	280
25.640.4353.0	8513 B / 13 OB	280
25.640.4453.0	8513 B / 14 OB	280
25.640.4553.0	8513 B / 15 OB	280
25.640.4653.0	8513 B / 16 OB	280
25.641.0253.0	8513 B / 2 F	280
25.641.0353.0	8513 B / 3 F	280
25.641.0453.0	8513 B / 4 F	280
25.641.0553.0	8513 B / 5 F	280
25.641.0653.0	8513 B / 6 F	280
25.641.0753.0	8513 B / 7 F	280
25.641.0853.0	8513 B / 8 F	280
25.641.0953.0	8513 B / 9 F	280
25.641.1053.0	8513 B / 10 F	280
25.641.1153.0	8513 B / 11 F	280
25.641.1253.0	8513 B / 12 F	280
25.641.1353.0	8513 B / 13 F	280
25.641.1453.0	8513 B / 14 F	280
25.641.1553.0	8513 B / 15 F	280
25.641.1653.0	8513 B / 16 F	280
25.641.3253.0	8513 B / 2 F OB	280
25.641.3353.0	8513 B / 3 F OB	280
25.641.3453.0	8513 B / 4 F OB	280
25.641.3553.0	8513 B / 5 F OB	280
25.641.3653.0	8513 B / 6 F OB	280
25.641.3753.0	8513 B / 7 F OB	280
25.641.3853.0	8513 B / 8 F OB	280
25.641.3953.0	8513 B / 9 F OB	280
25.641.4053.0	8513 B / 10 F OB	280
25.641.4153.0	8513 B / 11 F OB	280
25.641.4253.0	8513 B / 12 F OB	280
25.641.4353.0	8513 B / 13 F OB	280
25.641.4453.0	8513 B / 14 F OB	280
25.641.4553.0	8513 B / 15 F OB	280
25.641.4653.0	8513 B / 16 F OB	280
25.642.0253.0		281
25.642.0353.0		281
25.642.0453.0		281
25.642.0553.0		281
25.642.0653.0		281
25.642.0753.0		281
25.642.0853.0		281
25.642.0953.0		281
25.642.1053.0		281
25.642.1153.0		281
25.642.1253.0	8513 SUFK / 12	281
25.642.1353.0		281
25.642.1453.0		281
25.642.1553.0		281
25.642.1653.0		281
25.642.3253.0	8513 SUFK / 2 OB	281
25.642.3353.0	8513 SUFK / 3 OB	281
25.642.3453.0	8513 SUFK / 4 OB	281
25.642.3553.0	8513 SUFK / 5 OB	281
25.642.3653.0	8513 SUFK / 6 OB	281
25.642.3753.0	8513 SUFK / 7 OB	281
25.642.3853.0	8513 SUFK / 8 OB	281
25.642.3953.0	8513 SUFK / 9 OB	281
25.642.4053.0	8513 SUFK / 10 OB	281
25.642.4153.0	8513 SUFK / 11 OB	281
25.642.4253.0	8513 SUFK / 12 OB	281
25.642.4353.0		281
25.642.4453.0		281
25.642.4553.0		281
25.642.4653.0		281
25.646.0253.0	8513 S / 2 G	284
25.646.0353.0	8513 S / 3 G	284
25.646.0453.0	8513 S / 4 G	284
25.646.0553.0	8513 S / 5 G	284
25.646.0653.0	8513 S / 6 G	284
25.646.0753.0	8513 S / 7 G	284
25.646.0853.0	8513 S / 8 G	284
25.646.0953.0	8513 S / 9 G	284
25.646.1053.0	8513 S / 10 G	284
25.646.1153.0	8513 S / 11 G	284
25.646.1253.0	8513 S / 12 G	284
25.646.1353.0	8513 S / 13 G	284
25.646.1453.0	8513 S / 14 G	284
25.646.1553.0	8513 S / 15 G	284
25.646.1653.0	8513 S / 16 G	284
25.646.3253.0	8513 S / 2 G F	285
25.646.3353.0	8513 S / 3 GF	285
25.646.3453.0	8513 S / 4 GF	285
25.646.3553.0	8513 S / 5 GF	285
25.646.3653.0	8513 S / 6 GF	285
25.646.3753.0	8513 S / 7 GF	285
25.646.3853.0	8513 S / 8 GF	285
25.646.3953.0	8513 S / 9 GF	285
25.646.4053.0	8513 S / 10 GF	285
25.646.4153.0	8513 S / 11 GF	285
25.646.4253.0	8513 S / 12 G F	285
25.646.4353.0	8513 S / 13 GF	285
25.646.4453.0	8513 S / 14 GF	285
25.646.4553.0	8513 S / 15 GF	285
25.646.4653.0	8513 S / 16 GF	285
25.647.0253.0	8513 S / 2 W	284
25.647.0353.0	8513 S / 3 W	284
25.647.0453.0	8513 S / 4 W	284
25.647.0553.0	8513 S / 5 W	284
25.647.0653.0	8513 S / 6 W	284
25.647.0753.0	8513 S / 7 W	284
25.647.0853.0	8513 S / 8 W	284
25.647.0953.0	8513 S / 9 W	284
25.647.1053.0	8513 S / 10 W	284
25.647.1153.0	8513 S / 11 W	284
25.647.1253.0	8513 S / 12 W	284
25.647.1353.0	513 S / 13 W	284
25.647.1453.0	8513 S / 14 W	284
25.647.1553.0	8513 S / 15 W	284
25.647.1653.0	8513 S / 16 W	284
25.647.3253.0	8513 S / 2 W F	285
25.647.3353.0	8513 S / 3 WF	285
25.647.3453.0	8513 S / 4 WF	285
25.647.3553.0	8513 S / 5 WF	285
25.647.3653.0	8513 S / 6 WF	285
25.647.3753.0	8513 S / 7 WF	285
25.647.3853.0	8513 S / 8 WF	285
25.647.3953.0	8513 S / 9 WF	285
25.647.4053.0	8513 S / 10 WF	285
25.647.4153.0	8513 S / 11 WF	285
25.647.4253.0	8513 S / 12 W F	285
25.647.4353.0	8513 S / 13 WF	285
25.647.4453.0	8513 S / 14 WF	285
25.647.4553.0	8513 S / 15 WF	285
25.647.4653.0	8513 S / 16 WF	285
25.700.0153.0	8375/ 1/ 7,5	374
25.720.1353.0	8276	378
25.720.1453.0	8276 TKS	378
25.741.0053.0	8185/ 1 TOP V	349
25.741.0153.0	8185/ 1 TOP H	350
25.741.0253.0	8185/ 2 TOP V	349
25.741.0353.0	8185/ 3 TOP V	349
25.741.0453.0	8185/ 4 TOP V	349
25.741.0553.0	8185/ 5 TOP V	349
25.741.0653.0	8185/ 6 TOP V	349
25.741.0753.0	8185/ 7 TOP V	349
25.741.0853.0	8185/ 8 TOP V	349
25.741.0953.0	8185/ 9 TOP V	349
25.741.1053.0	8185/ 10 TOP V	349
25.741.1153.0	8185/ 11 TOP V	349
25.741.1253.0	8185/ 12 TOP V	349
25.741.1353.0	8185 TOP V	349
25.741.1453.0	8185/ 14 TOP V	349
25.741.1553.0	8185 TOP V	349
25.741.1653.0	8185/ 16 TOP V	349
25.741.3253.0	8185/ 2 TOP H	350
25.741.3353.0	8185/ 3 TOP H	350
25.741.3453.0	8185/ 4 TOP H	350
25.741.3553.0	8185/ 5 TOP H	350
25.741.3653.0	8185/ 6 TOP H	350
25.741.3753.0	8185/ 7 TOP H	350
25.741.3853.0	8185/ 8 TOP H	350
25.741.3953.0	8185 TOP H	350
25.741.4053.0	8185/ 10 TOP H	350
25.741.4153.0	8185 TOP H	350
25.741.4253.0	8185/ 12 TOP H	350
25.741.4353.0	8185 TOP H	350
25.741.4453.0	8185 TOP H	350
25.741.4553.0	8185 TOP H	350
25.741.4653.0	8185/ 16 TOP H	350
25.751.0053.0	8285/ 1 TOP V	349
25.751.0153.0	8285/ 1 TOP H	350
25.751.0253.0	8285/ 2 TOP V	349
25.751.0353.0	8285/ 3 TOP V	349
25.751.0453.0	8285/ 4 TOP V	349
25.751.0553.0	8285/ 5 TOP V	349
25.751.0653.0	8285/ 6 TOP V	349
25.751.0753.0	8285 TOP V	349
25.751.0853.0	8285/ 8 TOP V	349
25.751.0953.0	8285 TOP V	349
25.751.1053.0	8285/ 10 TOP V	349
25.751.1153.0	8285 TOP V	349
25.751.1253.0	8285/ 12 TOP V	349
25.751.1353.0	8285 TOP V	349
25.751.1453.0	8285 TOP V	349
25.751.1553.0	8285/ 15 TOP V	349
25.751.1653.0	8285 TOP V	349
25.751.3253.0	8285/ 2 TOP H	350
25.751.3353.0	8285/ 3 TOP H	350
25.751.3453.0	8285/ 4 TOP H	350
25.751.3553.0	8285/ 5 TOP H	350
25.751.3653.0	8285/ 6 TOP H	350
25.751.3753.0	8285 TOP H	350
25.751.3853.0	8285 TOP H	350
25.751.3953.0	8285 TOP H	350
25.751.4053.0	8285/ 10 TOP H	350
25.751.4153.0	8285 TOP H	350
25.751.4253.0	8285 TOP H	350
25.751.4353.0	8285 TOP H	350
25.751.4453.0	8285 TOP H	350
25.751.4553.0	8285 TOP H	350
25.751.4653.0	8285/ 16 TOP H	350
25.761.0053.0	8385/ 1 TOP V	351
25.761.0153.0	8385/ 1 TOP H	352
25.761.0253.0	8385/ 2 TOP V	351
25.761.0353.0	8385/ 3 TOP V	351
25.761.0453.0	8385 TOP V	351
25.761.0553.0	8385 TOP V	351
25.761.0653.0	8385/ 6 TOP V	351
25.761.0753.0	8385 TOP V	351
25.761.0853.0	8385 TOP V	351
25.761.3253.0	8385 TOP H	352
25.761.3353.0	8385/ 3 TOP H	352
25.761.3453.0	8385 TOP H	352

contents of part number

contents PART NUMBER

Part no.	Type	section / page
25.761.3553.0	8385 TOP H	352
25.761.3653.0	8385 TOP H	352
25.761.3753.0	8385 TOP H	352
25.761.3853.0	8385 TOP H	352
25.771.0053.0	8485/ 1 TOP V	351
25.771.0153.0	8485/ 1 TOP H	352
25.771.0253.0	8485/ 2 TOP V	351
25.771.0353.0	8485/ 3 TOP V	351
25.771.0453.0	8485/ 4 TOP V	351
25.771.0553.0	8485/ 5 TOP V	351
25.771.0653.0	8485 TOP V	351
25.771.0753.0	8485 TOP V	351
25.771.0853.0	8485 TOP V	351
25.771.3253.0	8485/ 2 TOP H	352
25.771.3353.0	8485/ 3 TOP H	352
25.771.3453.0	8485 TOP H	352
25.771.3553.0	8485 TOP H	352
25.771.3653.0	8485/ 6 TOP H	352
25.771.3753.0	8485 TOP H	352
25.771.3853.0	8485 TOP H	352
25.780.0253.0	8158 / 2 TOP V OB	353
25.780.0353.0	8158 / 3 TOP V OB	353
25.780.0453.0	8158 / 4 TOP V OB	353
25.780.0553.0	8158 / 5 TOP V OB	353
25.780.0653.0	8158 / 6 TOP V OB	353
25.780.0753.0	8158 / 7 TOP V OB	353
25.780.0853.0	8158 / 8 TOP V OB	353
25.780.0953.0	8158 / 9 TOP V OB	353
25.780.1053.0	8158 / 10 TOP V OB	353
25.780.1153.0	8158 / 11 TOP V OB	353
25.780.1253.0	8158 / 12 TOP V OB	353
25.780.1353.0	8158 / 13 TOP V OB	353
25.780.1453.0	8158 / 14 TOP V OB	353
25.780.1553.0	8158 / 15 TOP V OB	353
25.780.1653.0	8158 / 16 TOP V OB	353
25.781.0253.0	8258 / 2 TOP V OB	353
25.781.0353.0	8258 / 3 TOP V OB	353
25.781.0453.0	8258 / 4 TOP V OB	353
25.781.0553.0	8258 / 5 TOP V OB	353
25.781.0653.0	8258 / 6 TOP V OB	353
25.781.0753.0	8258 / 7 TOP V OB	353
25.781.0853.0	8258 / 8 TOP V OB	353
25.781.0953.0	8258 / 9 TOP V OB	353
25.781.1053.0	8258 / 10 TOP V OB	353
25.781.1153.0	8258 / 11 TOP V OB	353
25.781.1253.0	8258 / 12 TOP V OB	353
25.781.1353.0	8258 / 13 TOP V OB	353
25.781.1453.0	8258 / 14 TOP V OB	353
25.781.1553.0	8258 / 15 TOP V OB	353
25.781.1653.0	8258 / 16 TOP V OB	353
25.782.0253.0	8358 / 2 TOP V OB	354
25.782.0353.0	8358 / 3 TOP V OB	354
25.782.0453.0	8358 / 4 TOP V OB	354
25.782.0553.0	8358 / 5 TOP V OB	354
25.782.0653.0	8358 / 6 TOP V OB	354
25.782.0753.0	8358 / 7 TOP V OB	354
25.782.0853.0	8358 / 8 TOP V OB	354
25.782.0953.0	8358 / 9 TOP V OB	354
25.782.1053.0	8358 / 10 TOP V OB	354
25.782.1153.0	8358 / 11 TOP V OB	354
25.782.1253.0	8358 / 12 TOP V OB	354
25.782.1353.0	8358 / 13 TOP V OB	354
25.782.1453.0	8358 / 14 TOP V OB	354
25.782.1553.0	8358 / 15 TOP V OB	354
25.782.1653.0	8358 / 16 TOP V OB	354
25.783.0253.0	8458 / 2 TOP V OB	354
25.783.0353.0	8458 / 3 TOP V OB	354
25.783.0453.0	8458 / 4 TOP V OB	354
25.783.0553.0	8458 / 5 TOP V OB	354
25.783.0653.0	8458 / 6 TOP V OB	354
25.783.0753.0	8458 / 7 TOP V OB	354
25.783.0853.0	8458 / 8 TOP V OB	354
25.783.0953.0	8458 / 9 TOP V OB	354
25.783.1053.0	8458 / 10 TOP V OB	354
25.783.1153.0	8458 / 11 TOP V OB	354
25.783.1253.0	8458 / 12 TOP V OB	354
25.783.1353.0	8458 / 13 TOP V OB	354
25.783.1453.0	8458 / 14 TOP V OB	354
25.783.1553.0	8458 / 15 TOP V OB	354
25.783.1653.0	8458 / 16 TOP V OB	354
25.790.0253.0	8158 / 2 TOP H OB	353
25.790.0353.0	8158 / 3 TOP H OB	353
25.790.0453.0	8158 / 4 TOP H OB	353
25.790.0553.0	8158 / 5 TOP H OB	353
25.790.0653.0	8158 / 6 TOP H OB	353
25.790.0753.0	8158 / 7 TOP H OB	353
25.790.0853.0	8158 / 8 TOP H OB	353
25.790.0953.0	8158 / 9 TOP H OB	353
25.790.1053.0	8158 / 10 TOP H OB	353
25.790.1153.0	8158 / 11 TOP H OB	353
25.790.1253.0	8158 / 12 TOP H OB	353
25.790.1353.0	8158 / 13 TOP H OB	353
25.790.1453.0	8158 / 14 TOP H OB	353
25.790.1553.0	8158 / 15 TOP H OB	353
25.790.1653.0	8158 / 16 TOP H OB	353
25.791.0253.0	8258 / 2 TOP H OB	353
25.791.0353.0	8258 / 3 TOP H OB	353
25.791.0453.0	8258 / 4 TOP H OB	353
25.791.0553.0	8258 / 5 TOP H OB	353
25.791.0653.0	8258 / 6 TOP H OB	353
25.791.0753.0	8258 / 7 TOP H OB	353
25.791.0853.0	8258 / 8 TOP H OB	353
25.791.0953.0	8258 / 9 TOP H OB	353
25.791.1053.0	8258 / 10 TOP H OB	353
25.791.1153.0	8258 / 11 TOP H OB	353
25.791.1253.0	8258 / 12 TOP H OB	353
25.791.1353.0	8258 / 13 TOP H OB	353
25.791.1453.0	8258 / 14 TOP H OB	353
25.791.1553.0	8258 / 15 TOP H OB	353
25.791.1653.0	8258 / 16 TOP H OB	353
25.792.0253.0	8358 / 2 TOP H OB	354
25.792.0353.0	8358 / 3 TOP H OB	354
25.792.0453.0	8358 / 4 TOP H OB	354
25.792.0553.0	8358 / 5 TOP H OB	354
25.792.0653.0	8358 / 6 TOP H OB	354
25.792.0753.0	8358 / 7 TOP H OB	354
25.792.0853.0	8358 / 8 TOP H OB	354
25.792.0953.0	8358 / 9 TOP H OB	354
25.792.1053.0	8358 / 10 TOP H OB	354
25.792.1153.0	8358 / 11 TOP H OB	354
25.792.1253.0	8358 / 12 TOP H OB	354
25.792.1353.0	8358 / 13 TOP H OB	354
25.792.1453.0	8358 / 14 TOP H OB	354
25.792.1553.0	8358 / 15 TOP H OB	354
25.792.1653.0	8358 / 16 TOP H OB	354
25.793.0253.0	8458 / 2 TOP H OB	354
25.793.0353.0	8458 / 3 TOP H OB	354
25.793.0453.0	8458 / 4 TOP H OB	354
25.793.0553.0	8458 / 5 TOP H OB	354
25.793.0653.0	8458 / 6 TOP H OB	354
25.793.0753.0	8458 / 7 TOP H OB	354
25.793.0853.0	8458 / 8 TOP H OB	354
25.793.0953.0	8458 / 9 TOP H OB	354
25.793.1053.0	8458 / 10 TOP H OB	354
25.793.1153.0	8458 / 11 TOP H OB	354
25.793.1253.0	8458 / 12 TOP H OB	354
25.793.1353.0	8458 / 13 TOP H OB	354
25.793.1453.0	8458 / 14 TOP H OB	354
25.793.1553.0	8458 / 15 TOP H OB	354
25.793.1653.0	8458 / 16 TOP H OB	354
25.820.0253.0	8113 BFK / 2 TOP K	37
25.820.0253.0	8113 BFK / 2 TOP K	292
25.820.0353.0	8113 BFK / 3 TOP K	292
25.820.0453.0	8113 BFK / 4 TOP K	37
25.820.0453.0	8113 BFK / 4 TOP K	292
25.820.0553.0	8113 BFK / 5 TOP K	37
25.820.0553.0	8113 BFK / 5 TOP K	292
25.820.0653.0	8113 BFK / 6 TOP K	37
25.820.0653.0	8113 BFK / 6 TOP K	292
25.820.0753.0	8113 BFK / 7 TOP K	37
25.820.0753.0	8113 BFK / 7 TOP K	292
25.820.0853.0	8113 BFK / 8 TOP K	37
25.820.0853.0	8113 BFK / 8 TOP K	292
25.820.0953.0	8113 BFK / 9 TOP K	37
25.820.0953.0	8113 BFK / 9 TOP K	292
25.820.1053.0	8113 BFK /10 TOP K	37
25.820.1053.0	8113 BFK /10 TOP K	292
25.820.1153.0	8113 BFK /11 TOP K	37
25.820.1153.0	8113 BFK /11 TOP K	292
25.820.1253.0	8113 BFK /12 TOP K	37
25.820.1253.0	8113 BFK /12 TOP K	292
25.820.1353.0	8113 BFK /13 TOP K	37
25.820.1353.0	8113 BFK /13 TOP K	292
25.820.1453.0	8113 BFK /14 TOP K	37
25.820.1453.0	8113 BFK /14 TOP K	292
25.820.1553.0	8113 BFK /15 TOP K	37
25.820.1553.0	8113 BFK /15 TOP K	292
25.820.1653.0	8113 BFK /16 TOP K	37
25.820.1653.0	8113 BFK /16 TOP K	292
25.820.3253.0	8113 BFK / 2 TOP K OB	37
25.820.3253.0	8113 BFK / 2 TOP K OB	292
25.820.3353.0	8113 BFK / 3 TOP K OB	37
25.820.3353.0	8113 BFK / 3 TOP K OB	292
25.820.3453.0	8113 BFK / 4 TOP K OB	37
25.820.3453.0	8113 BFK / 4 TOP K OB	292
25.820.3553.0	8113 BFK / 5 TOP K OB	37
25.820.3553.0	8113 BFK / 5 TOP K OB	292
25.820.3653.0	8113 BFK / 6 TOP K OB	37
25.820.3653.0	8113 BFK / 6 TOP K OB	292
25.820.3753.0	8113 BFK / 7 TOP K OB	37
25.820.3753.0	8113 BFK / 7 TOP K OB	292
25.820.3853.0	8113 BFK / 8 TOP K OB	37
25.820.3853.0	8113 BFK / 8 TOP K OB	292
25.820.3953.0	8113 BFK / 9 TOP K OB	37
25.820.3953.0	8113 BFK / 9 TOP K OB	292
25.820.4053.0	8113 BFK /10 TOP K OB	37
25.820.4053.0	8113 BFK /10 TOP K OB	292
25.820.4153.0	8113 BFK /11 TOP K OB	37
25.820.4153.0	8113 BFK /11 TOP K OB	292
25.820.4253.0	8113 BFK /12 TOP K OB	37
25.820.4253.0	8113 BFK /12 TOP K OB	292
25.820.4353.0	8113 BFK /13 TOP K OB	37
25.820.4353.0	8113 BFK /13 TOP K OB	292
25.820.4453.0	8113 BFK /14 TOP K OB	37
25.820.4453.0	8113 BFK /14 TOP K OB	292
25.820.4553.0	8113 BFK /15 TOP K OB	37
25.820.4553.0	8113 BFK /15 TOP K OB	292
25.820.4653.0	8113 BFK /16 TOP K OB	37
25.820.4653.0	8113 BFK /16 TOP K OB	292
25.821.0253.0		292
25.821.0353.0		292
25.821.0453.0		292
25.821.0553.0		292
25.821.0653.0		292
25.821.0753.0		292
25.821.0853.0		292
25.821.0953.0		292
25.821.1053.0		292
25.821.1153.0		292
25.821.1253.0		292
25.821.1353.0		292
25.821.1453.0		292
25.821.1553.0		292
25.821.1653.0		292
25.821.3253.0		292
25.821.3353.0		292
25.821.3453.0	8113 BFK / 4 TOP K F OB	292
25.821.3553.0		292
25.821.3653.0		292
25.821.3753.0		292
25.821.3853.0		292
25.821.3953.0		292
25.821.4053.0		292
25.821.4153.0		292
25.821.4253.0		292
25.821.4353.0		292
25.821.4453.0		292
25.821.4553.0		292
25.821.4653.0		292
25.840.0253.0	8213 BFK / 2 TOP K	292
25.840.0353.0	8213 BFK / 3 TOP K	292
25.840.0453.0	8213 BFK / 4 TOP K	292
25.840.0553.0	8213 BFK / 5 TOP K	292
25.840.0653.0	8213 BFK / 6 TOP K	292
25.840.0753.0	8213 BFK / 7 TOP K	292
25.840.0853.0	8213 BFK / 8 TOP K	292
25.840.0953.0	8213 BFK / 9 TOP K	292
25.840.1053.0	8213 BFK /10 TOP K	292
25.840.1153.0	8213 BFK /11 TOP K	292
25.840.1253.0	8213 BFK /12 TOP K	292
25.840.1353.0	8213 BFK /13 TOP K	292
25.840.1453.0	8213 BFK /14 TOP K	292
25.840.1553.0	8213 BFK /15 TOP K	292
25.840.1653.0	8213 BFK /16 TOP K	292
25.840.3253.0	8213 BFK / 2 TOP K OB	292
25.840.3353.0	8213 BFK / 3 TOP K OB	292
25.840.3453.0	13 BFK / 4 TOP K OB	292
25.840.3553.0	8213 BFK / 5 TOP K OB	292
25.840.3653.0	8213 BFK / 6 TOP K OB	292
25.840.3753.0	8213 BFK / 7 TOP K OB	292
25.840.3853.0	8213 BFK / 8 TOP K OB	292
25.840.3953.0	8213 BFK / 9 TOP K OB	292
25.840.4053.0	8213 BFK /10 TOP K OB	292
25.840.4153.0	8213 BFK /11 TOP K OB	292
25.840.4253.0	8213 BFK /12 TOP K OB	292
25.840.4353.0	8213 BFK /13 TOP K OB	292
25.840.4453.0	8213 BFK /14 TOP K OB	292
25.840.4553.0	8213 BFK /15 TOP K OB	292
25.840.4653.0	8213 BFK /16 TOP K OB	292
25.841.0253.0		292
25.841.0353.0		292
25.841.0453.0		292
25.841.0553.0		292
25.841.0653.0		292
25.841.0753.0		292
25.841.0853.0		292
25.841.0953.0		292
25.841.1053.0		292
25.841.1153.0		292
25.841.1253.0	8213 BFK/12 TOP K F	292
25.841.1353.0		292
25.841.1453.0		292
25.841.1553.0		292
25.841.1653.0		292
25.841.3253.0		292
25.841.3353.0		292
25.841.3453.0		292
25.841.3553.0		292
25.841.3653.0		292
25.841.3753.0		292
25.841.3853.0		292
25.841.3953.0		292
25.841.4053.0		292
25.841.4153.0		292
25.841.4253.0		292

contents

Part no.	Type	section / page
25.841.4353.0		292
25.841.4453.0		292
25.841.4553.0		292
25.841.4653.0		292
25.857.0253.0	8213 SUFK/ 2 TOP	293
25.857.0353.0	8213 SUFK/ 3 TOP	293
25.857.0453.0	8213 SUFK/ 4 TOP	293
25.857.0553.0	8213 SUFK/ 5 TOP	293
25.857.0653.0	8213 SUFK/ 6 TOP	293
25.857.0753.0	8213 SUFK/ 7 TOP	293
25.857.0853.0	8213 SUFK/ 8 TOP	293
25.857.0953.0	8213 SUFK/ 9 TOP	293
25.857.1053.0	8213 SUFK/10 TOP	293
25.857.1153.0	8213 SUFK/11 TOP	293
25.857.1253.0	8213 SUFK/12 TOP	293
25.857.1353.0	8213 SUFK/13 TOP	293
25.857.1453.0	8213 SUFK/14 TOP	293
25.857.1553.0	8213 SUFK/15 TOP	293
25.857.1653.0	8213 SUFK/16 TOP	293
25.857.3253.0	8213 SUFK/ 2 TOP OB	293
25.857.3353.0	8213 SUFK/ 3 TOP OB	293
25.857.3453.0	8213 SUFK/ 4 TOP OB	293
25.857.3553.0	8213 SUFK/ 5 TOP OB	293
25.857.3653.0	8213 SUFK/ 6 TOP OB	293
25.857.3753.0	8213 SUFK/ 7 TOP OB	293
25.857.3853.0	8213 SUFK/ 8 TOP OB	293
25.857.3953.0	8213 SUFK/ 9 TOP OB	293
25.857.4053.0	8213 SUFK/10 TOP OB	293
25.857.4153.0	8213 SUFK/11 TOP OB	293
25.857.4253.0	8213 SUFK/12 TOP OB	293
25.857.4353.0	8213 SUFK/13 TOP OB	293
25.857.4453.0	8213 SUFK/14 TOP OB	293
25.857.4553.0	8213 SUFK/15 TOP OB	293
25.857.4653.0	8213 SUFK/16 TOP OB	293
25.880.0253.0	8413 BFK / 2 TOP K	294
25.880.0353.0	8413 BFK / 3 TOP K	294
25.880.0453.0	8413 BFK / 4 TOP K	294
25.880.0553.0	8413 BFK / 5 TOP K	294
25.880.0653.0	8413 BFK / 6 TOP K	294
25.880.0753.0	8413 BFK / 7 TOP K	294
25.880.0853.0	8413 BFK / 8 TOP K	294
25.880.0953.0	8413 BFK / 9 TOP K	294
25.880.1053.0	8413 BFK /10 TOP K	294
25.880.1153.0	8413 BFK /11 TOP K	294
25.880.1253.0	8413 BFK /12 TOP K	294
25.880.3253.0	8413 BFK / 2 TOP K OB	294
25.880.3353.0	8413 BFK / 3 TOP K OB	294
25.880.3453.0	8413 BFK / 4 TOP K OB	294
25.880.3553.0	8413 BFK / 5 TOP K OB	294
25.880.3653.0	8413 BFK / 6 TOP K OB	294
25.880.3753.0	8413 BFK / 7 TOP K OB	294
25.880.3853.0	8413 BFK / 8 TOP K OB	294
25.880.3953.0	8413 BFK / 9 TOP K OB	294
25.880.4053.0	8413 BFK /10 TOP K OB	294
25.880.4153.0	8413 BFK /11 TOP K OB	294
25.880.4253.0	8413 BFK /12 TOP K OB	294
25.881.0253.0	8413 BFK / 2 TOP K F	294
25.881.0353.0	8413 BFK / 3 TOP K F	294
25.881.0453.0	8413 BFK / 4 TOP K F	294
25.881.0553.0	8413 BFK / 5 TOP K F	294
25.881.0653.0	8413 BFK / 6 TOP K F	294
25.881.0753.0	8413 BFK / 7 TOP K F	294
25.881.0853.0	8413 BFK / 8 TOP K F	294
25.881.0953.0	8413 BFK / 9 TOP K F	294
25.881.1053.0	8413 BFK /10 TOP K F	294
25.881.1153.0	8413 BFK /11 TOP K F	294
25.881.1253.0	8413 BFK /12 TOP K F	294
25.881.3253.0	8413 BFK / 2 TOP K F OB	294
25.881.3353.0	8413 BFK / 3 TOP K F OB	294
25.881.3453.0	8413 BFK / 4 TOP K F OB	294
25.881.3553.0	8413 BFK / 5 TOP K F OB	294
25.881.3653.0	8413 BFK / 6 TOP K F OB	294
25.881.3753.0	8413 BFK / 7 TOP K F OB	294
25.881.3853.0	8413 BFK / 8 TOP K F OB	294
25.881.3953.0	8413 BFK / 9 TOP K F OB	294
25.881.4053.0	8413 BFK /10 TOP K F OB	294
25.881.4153.0	8413 BFK /11 TOP K F OB	294
25.881.4253.0	8413 BFK /12 TOP K F OB	294
26.500.2053.0	RV2 S/6	206
26.500.2153.0	RV2 S/3 L	206
26.500.2253.0	RV2 S/3 TP1	207
26.500.2353.0	RV2 S/4 BLAU	206
26.500.2453.0	RV2 S/2 L BLAU	206
26.500.2553.0	RV2 S/2 TP1 BLAU	207
26.500.4053.0	RV2 A/6	208
26.500.4153.0	RV2 A/3 L	208
26.500.4253.0	RV2 A/3 TP1	209
26.500.4353.0	RV2 A/4 BLAU	208
26.500.4453.0	RV A/2 L BLAU	208
26.500.4553.0	RV2 A/2 TP1 BLAU	209
27.000.0253.0	8292 H / 2 OB	341
27.000.0353.0	8292 H / 3 OB	341
27.000.2253.0	8292 EH / 2 OB	340
27.000.2353.0	8292 EH / 3 OB	340
27.000.4253.0	8292 DH / 2 OB	340

Part no.	Type	section / page
27.000.4353.0	8292 DH / 3 OB	340
27.002.0253.0	7572 L4 / 2 OB	376
27.002.0353.0	7572 L4 / 3 OB	376
27.002.2253.0	7572 L2 / 2 OB	376
27.002.2353.0	7572 L2 / 3 OB	376
27.002.4253.0	7572 L2 / 3 / 2 OB	377
27.002.4353.0	7572 L2 / 5 / 3 OB	377
27.002.6153.0		375
27.002.6353.0	7573 L2 / 3 W OB	375
27.002.6453.0	7573 L2 / 4 W OB	375
27.334.0253.0		304
27.334.0353.0		304
27.334.0453.0		304
27.334.0553.0	8113 SEG/ 5/10 G OB	304
27.334.0653.0		304
27.334.0753.0		304
27.334.0853.0		304
27.334.0953.0		304
27.334.1053.0	8113 SEG/10/20 G OB	304
27.334.1153.0		304
27.334.1253.0		304
27.334.1353.0		304
27.334.1453.0		304
27.334.1553.0		304
27.334.1653.0		304
27.336.0253.0		304
27.336.0353.0		304
27.336.0453.0		304
27.336.0553.0	8113 SEG/ 5/10 W OB	304
27.336.0653.0		304
27.336.0753.0		304
27.336.0853.0		304
27.336.0953.0		304
27.336.1053.0	8113 SEG/10/20 W OB	304
27.336.1153.0		304
27.336.1253.0		304
27.336.1353.0		304
27.336.1453.0		304
27.336.1553.0		304
27.336.1653.0		304
27.341.3253.0		287
27.341.3353.0		287
27.341.3453.0		287
27.341.3553.0	8213 B / 5 S OB	287
27.341.3653.0		287
27.341.3753.0		287
27.341.3853.0		287
27.341.3953.0		287
27.341.4053.0	8213 B / 10 S OB	287
27.341.4153.0		287
27.341.4253.0		287
27.341.4353.0		287
27.341.4453.0		287
27.341.4553.0		287
27.341.4653.0		287
27.354.0253.0		304
27.354.0353.0		304
27.354.0453.0		304
27.354.0553.0	8213 SEG/ 5/10 G OB	304
27.354.0653.0		304
27.354.0753.0		304
27.354.0853.0		304
27.354.0953.0		304
27.354.1053.0	8213 SEG/10/20 G OB	304
27.354.1153.0		304
27.354.1253.0		304
27.354.1353.0		304
27.354.1453.0		304
27.354.1553.0		304
27.354.1653.0		304
27.356.0253.0		304
27.356.0353.0		304
27.356.0453.0		304
27.356.0553.0	8213 SEG/ 5/10 W OB	304
27.356.0653.0		304
27.356.0753.0		304
27.356.0853.0		304
27.356.0953.0		304
27.356.1053.0	8213 SEG/10/20 W OB	304
27.356.1153.0		304
27.356.1253.0		304
27.356.1353.0		304
27.356.1453.0		304
27.356.1553.0		304
27.356.1653.0		304
27.703.0253.0		356
27.703.0353.0	8486 / 3 TOP V OB	356
27.703.0453.0	8486 / 4 TOP V OB	356
27.713.0253.0		356
27.713.0353.0	8486 / 3 TOP H OB	356
27.713.0453.0	8486 / 4 TOP H OB	356
27.714.0253.0		355
27.714.0353.0	7386 / 3 TOP H OB	355
27.714.0453.0		355
27.714.0553.0		355

Part no.	Type	section / page
27.714.0653.0	7386 / 6 TOP H OB	355
27.714.0753.0		355
27.714.0853.0		355
27.720.0153.0		348
27.720.0253.0		348
27.720.0353.0		348
27.720.0453.0		348
27.720.0553.0	8152 / 5 TOP V OB	348
27.720.0653.0		348
27.720.0753.0		348
27.720.0853.0		348
27.720.0953.0		348
27.720.1053.0	8152 / 10 TOP V OB	348
27.730.0153.0		348
27.730.0253.0		348
27.730.0353.0		348
27.730.0453.0		348
27.730.0553.0	8152 / 5 TOP H OB	348
27.730.0653.0		348
27.730.0753.0		348
27.730.0853.0		348
27.730.0953.0		348
27.730.1053.0	8152 / 10 TOP H OB	348
28.121.0240.0	KBD 1 / 2 KR	266
28.121.0340.0	KBD 1 / 3 KR	266
28.121.0440.0	KBD 1 / 4 KR	266
28.121.0540.0	KBD 1 / 5 KR	266
28.121.0640.0	KBD 1 / 6 KR	266
28.121.0740.0		266
28.121.0840.0	KBD 1 / 8 KR	266
28.121.1040.0	KBD 1 /10 KR	266
28.121.1240.0	KBD 1 /12 KR	266
29.130.1353.0	KL 58 / 3 / 1	268
29.130.1553.0	KL 58 / 5 / 1	268
29.130.1653.0	KL 58 / 6 / 1	268
29.130.2353.0		268
29.130.2553.0		268
29.130.2653.0		268
29.131.1353.0	KL 58 / 3 S / 1	269
29.131.1553.0	KL 58 / 5 S / 1	269
29.131.1653.0	KL 58 / 6 S / 1	269
29.131.2353.0	KL 58 / 3 S R / 1	269
29.131.2553.0	KL 58 / 5 S R / 1	269
29.131.2653.0	KL 58 / 6 S R / 1	269
29.400.0453.0	KL 16 / 4 PA	256
29.400.0653.0	KL 16 / 6 PA	256
29.400.0853.0	KL 16 / 8 PA	256
29.400.1253.0	KL 16 / 12 PA	256
29.400.1653.0	KL 16 / 16 PA	256
29.400.2053.0	KL 16 / 20 PA	256
29.401.0453.0	KL 16 / 4 PA DS	256
29.401.0653.0	KL 16 / 6 PA DS	256
29.401.0853.0	KL 16 / 8 PA DS	256
29.401.1253.0	KL 16 / 12 PA DS	256
29.401.1653.0	KL 16 / 16 PA DS	256
29.401.2053.0	KL 16 / 20 PA DS	256
29.500.0253.0	KL 20 / 2 PA	264
29.500.0353.0	KL 20 / 4 PA	264
29.500.1253.0	KL 20 / 2 DS PA	264
29.500.1353.0	KL 20 / 4 DS PA	264
29.500.3053.0	KL 30 / 3 PA	265
29.500.4053.0	KL 30 / 3 DS PA	265
29.500.9253.0	KL 24 / 2	265
29.500.9353.0	KL 24 / 3	265
29.500.9453.0	KL 24 / 4	265
29.500.9553.0	KL 24 / 5	265
29.502.9353.0	KL 24 / 3 SL	265
29.502.9553.0	KL 24 / 5 SL	265
29.608.0153.0	KL17 N/ 1 /S6,3	267
29.608.0253.0	KL17 N/ 2 /S6,3	267
29.608.0353.0	KL17 N/ 3 /S6,3	267
29.608.0453.0	KL17 N/ 4 /S6,3	267
29.608.0553.0	KL17 N/ 5 S6,3	267
29.608.0653.0	KL17 N/ 6 /S6,3	267
29.608.0753.0	KL17 N/ 7 /S6,3	267
29.608.0853.0	KL17 N/ 8 /S6,3	267
29.608.0953.0	KL17 N/ 9 /S6,3	267
29.608.1053.0	KL17 N/10 /S6,3	267
29.608.1153.0	KL17 N/11 /S6,3	267
29.608.1253.0	KL17 N/12 /S6,3	267
29.608.1353.0	KL17 N/13 /S6,3	267
29.608.1453.0	KL17 N/14 /S6,3	267
29.608.1553.0	KL17N/15 /S6,3	267
29.608.1653.0	KL17 N/16 /S6,3	267
29.608.1753.0	KL17 N/17 /S6,3	267
29.608.1853.0	KL17 N/18 /S6,3	267
29.608.1953.0	KL17 N/19 /S6,3	267
29.608.2053.0	KL17 N/20 /S6,3	267
29.608.2153.0	KL17 N/21 /S6,3	267
29.608.2253.0	KL17 N/22 /S6,3	267
29.608.2353.0	KL17 N/23 /S6,3	267
29.608.2453.0	KL17 N/24 /S6,3	267
29.608.3153.0	KL17 N/ 1 K/S6,3	267
29.608.3253.0	KL17 N/ 2 K/S6,3	267
29.608.3353.0	KL17 N/ 3 K/S6,3	267

contents of part number

contents PART NUMBER

Part no.	Type	section / page
29.608.3453.0	KL17 N/ 4 K/S6,3	267
29.608.3553.0	KL17 N/ 5 K/S6,3	267
29.608.3653.0	KL17 N/ 6 K/S6,3	267
29.608.3753.0	KL17 N/ 7 K/S6,3	267
29.608.3853.0	KL17 N/ 8 K/S6,3	267
29.608.3953.0	KL17 N/ 9 K/S6,3	267
29.608.4053.0	KL17 N/10 K/S6,3	267
29.608.4153.0	KL17 N/11 K/S6,3	267
29.608.4253.0	KL17 N/12 K/S6,3	267
29.608.4353.0	KL17 N/13 K/S6,3	267
29.608.4453.0	KL17 N/14 K/S6,3	267
29.608.4553.0	KL17 N/15 K/S6,3	267
29.608.4653.0	KL17 N/16 K/S6,3	267
29.608.4753.0		267
29.608.4853.0		267
29.608.4953.0		267
29.608.5053.0	KL17 N/20 K/S6,3	267
29.608.5153.0		267
29.608.5253.0		267
29.608.5353.0		267
29.608.5453.0		267
30.400.0675.0	1038 A	263
30.400.1075.0	1038 B	263
30.400.1675.0	1038 C	263
30.401.0475.0	1038 A DS	263
30.401.0675.0	1038 B DS	263
30.401.1075.0	1038 C DS	263
30.494.0010.0	WAK4/1	216
30.494.0010.6	WAK4/1 BL	216
30.494.0010.7	WAK4/1 GN	216
30.494.0110.0	WAK4/3	216
30.494.0110.6	WAK4/3 BL	216
30.494.0110.7	WAK4/3 GN	216
30.494.1010.0	WAK16/1	216
30.494.1010.6	WAK16/1 BL	216
30.494.1010.7	WAK16/1 GN	216
30.494.1110.0	WAK25/3	216
30.494.1110.6	WAK25/3 BL	193
30.494.1110.7	WAK25/3 GN	216
30.494.2510.0	WAK35/3	216
30.494.2510.6	WAK35/3 BL	193
30.494.2510.7	WAK35/3 GN	216
30.494.3021.0		80
30.494.3021.6	WAK16/2 BL/V0	24
30.494.4021.6	WAK35/2 BL/V0	107
30.494.4121.0	WAK35/2 BLANK	24
30.494.4121.6		81
30.494.4210.0		213
32.530.0053.0		154
32.540.0053.0		154
32.550.0053.0		155
32.560.0053.0		155
32.630.0042.0	BK M 6 / 32	152
32.640.0042.0	BK M 8 / 32	152
32.650.0042.0	BK M 10 / 32	153
33.011.0653.0	KL 28 / 6 DS PA	214
33.041.0653.0	KL 29 / 6 DS PA	214
37.702.7453.0	WKF 1.5 KOI 3L	44
37.702.7553.0	WKF 1.5 KOI 3L/SL	44
37.702.7653.0	WKF 1.5 KOA 2L/SL	45
37.702.7753.0	WKF 1.5 KOE	45
37.702.8453.0	WKF 1.5 KOI 3L-PGE	44
37.702.8553.0	WKF 1.5 KOI 3L/SL-PGE	44
37.702.8653.0	WKF 1.5 KOA 2L/SL-PGE	45
37.702.8753.0	WKF 1.5 KOE-PGN	45
54.003.7553.0	9700 A / 5 S35	189
54.003.7553.6	9700 A / 5 S35 BLAU	189
54.004.7553.0	9700 A / 6 S35	189
54.004.7553.6	9700 A / 6 S35 BLAU	190
54.004.7753.0	9700 A / 6 ETK S35	189
54.010.7553.0	9700 A / 8 S35	189
54.010.7553.6	9700 A / 8 S35 BLAU	191
54.010.7753.0	9700 A / 8 ETK S35	189
54.016.7553.0	9700 A / 10 S35	189
54.016.7553.6	9700 A / 10 S35 BLAU	191
54.016.7753.0	9700 A / 10 ETK S35	189
54.025.7553.0	9700 A / 12 S35	191
54.025.7553.6	9700 A / 12 S35 BLAU	191
54.035.7553.0	9700 A / 16 S35	189
54.035.7553.6	9700 A / 16 S35 BLAU	189
54.904.4055.0	9700 B/30 SI E14/S32/V0	129
54.925.4055.0	9700 B/30 SI E18/S32/V0	129
55.503.1053.0	WKM 2,5 / 15/V0	145
55.503.1053.6	WKM 2,5 / 15 BLAU/V0	145
55.503.1253.0	WKM 2,5 F1 / 15/V0	144
55.503.1353.0	WKM 2,5 F2 / 15/V0	144
55.504.1053.0	WKM 4 / 15/V0	145
55.504.1053.6	WKM 4 / 15 BLAU/V0	145
55.504.9153.0	WKM 4 SL / 15/V0	145
55.703.0053.0		40
55.703.0053.6		40
55.703.9053.0		40
56.004.9053.0	9700 A / 6 SL 2 S35	189
56.010.9053.0	9700 A / 8 SL 2 S35	189
56.016.9053.0	9700 A / 10 SL 2 S35	189
56.035.9053.0	9700 A / 16 SL 2 S35	189
56.035.9453.0	9700 A / 16 PEN2 S35	195
56.106.0053.0		149
56.106.0553.0		148
56.106.0653.0		148
56.301.0053.0	WKC 1 /35	231
56.301.0053.6	WKC 1 /35 BLAU	231
56.301.2053.0	WKC 1 TKM/35	231
56.301.2053.6	WKC 1 TKM/35 BLAU	240
56.301.4053.0	WKC 1 TKG/35	231
56.301.5053.0	WKC 1 D1/2/35	231
56.301.5053.6	WKC 1 D1/2/35 BLAU	234
56.301.5153.0	WKC 1 D2/2/35	231
56.301.5153.6	WKC 1 D2/2/35 BLAU	236
56.301.7053.0	WKC 1 E/35	231
56.301.7053.6		238
56.301.9053.0	WKC 1 SL/35	231
56.301.9153.0	WKC 1 /D2/2/SL/35	237
56.301.9353.0	WKC 1 D1/2/SL/35	235
56.303.0053.0	WKC 2,5 /35	231
56.303.0053.6	WKC 2,5 /35 BLAU	231
56.303.2053.0	WKC 2,5 TKM/35	231
56.303.2053.6	WKC 2,5 TKM/35 BLAU	240
56.303.4053.0	WKC 2,5 TKG/35	231
56.303.5053.0	WKC 2,5 D1/2/35	231
56.303.5053.6	WKC 2,5 D1/2/35 BLAU	234
56.303.5153.0	WKC 2,5 D2/2/35	231
56.303.5153.6	WKC 2,5 D2/2/35 BLAU	236
56.303.7053.0	WKC 2,5 E/35	231
56.303.7053.6		238
56.303.7153.5	WKC 2,5 E/35/1D/2G ROT	239
56.303.7153.9	WKC2,5E/35/1D/2G ORANGE	239
56.303.7253.5		239
56.303.7353.5		239
56.303.7453.9		239
56.303.7553.5	WKC 2,5 E/35 ROT	239
56.303.7553.9	WKC 2,5 E/35 ORANGE	239
56.303.7953.5	WKC 2,5 E/35 G2	239
56.303.8053.9		239
56.303.8253.5	WKC 2,5 E/35 GO	239
56.303.8353.5	WKC 2,5 E/35 G-URL	239
56.303.9053.0	WKC 2,5 SL/35	231
56.303.9153.0	WKC 2,5 D2/2/SL/35	231
56.303.9353.0	WKC 2,5 D1/2/SL/35	235
56.303.xx53.5		239
56.303.xx53.9		239
56.351.0153.0		246
56.351.0153.6		246
56.351.9053.0		247
56.353.0153.0		246
56.353.0153.6		246
56.353.9053.0		247
56.395.0055.0	RFK 1 / 95 F S35/V0	156
56.395.0155.0	RFK 1 / 95 K S35/V0	156
56.395.0255.0	RFK 1 / 95 FK S35/V0	156
56.395.1055.0	RFK 1 / 95 FM S35/V0	156
56.395.1255.0	RFK 1 / 95 FMK S35/V0	156
56.397.0155.0		157
56.397.0255.0		157
56.397.1255.0	RFK 1 / 150 FMK S35/V0	157
56.398.0055.0	RFK 1 / 185 F S35/V0	158
56.398.1055.0	RFK 1 / 185 FM S35/V0	158
56.399.0055.0	RFK 1 / 240 F S35/V0	159
56.399.0155.0	RFK 1 / 240 K S35/V0	159
56.399.0255.0	RFK 1 / 240 FK S35/V0	159
56.399.1055.0	RFK 1 / 240 FM S35/V0	159
56.399.1255.0	RFK 1 / 240 FMK S35/V0	159
56.404.8855.0	WKI 4 TKG-D-SL /V0	74
56.404.9155.0	WKI 4 NTN-D-SL /V0	74
56.404.9255.0	WKI 4 NT -D-SL GL/V0	73
56.404.9455.0	WKI 4 N-D-SL /V0	69
56.404.9555.0	WKI 4 NT -D-SL /V0	69
56.404.9655.0	WKI 4 DU /V0	72
56.404.9755.0	WKI 4 D-D /V0	69
56.404.9855.0	WKI 4 D-D-SL /V0	69
56.503.7355.0	WK 2,5-4 KI SL /V0	119
56.503.7455.0	WK 2,5-4 KI SL-NGN /V0	119
56.503.7555.0	WK 2,5-4 KI SL-PGN /V0	119
56.503.7655.0	WK 2,5-4 KI SL-PRT /V0	119
56.503.8355.0	WK 2,5-3 D SL /V0	119
56.503.8455.0	WK 2,5-3 D SL-NGN /V0	119
56.503.8555.0	WK 2,5-3 D SL-PGN /V0	119
56.510.9255.0	WKI 10 SL / 35/V0	82
56.510.9455.0	WKI 10 PEN/35/V0	84
56.516.9255.0	WKI 16 SL / 35/V0	69
56.516.9455.0	WKI 16 PEN/35/V0	84
56.535.9255.0	WKI 35 SL / 35/V0	83
56.535.9455.0	WKI 35 PEN/35/V0	85
56.702.2053.0	WKF 1,5E/8113/35	37
56.702.2053.0	WKF 1,5E/8113/35	309
56.702.7053.0	WKF 1,5 E / 35	33
56.703.0053.0	WKF 2,5 / 35	19
56.703.0053.6	WKF 2,5 / 35 BLAU	19
56.703.2053.0	WKF 2,5/D2 35/8113	36
56.703.2053.0	WKF 2,5/D2 35/8113	308
56.703.2053.6	WKF 2,5/D2/ 35/8113 BL	36
56.703.2053.6	WKF 2,5/D2/ 35/8113 BL	308
56.703.5053.0	WKF 2,5/D1/2/35	19
56.703.5053.6	WKF 2,5/D1/2/35 BLAU	19
56.703.5153.0	WKF 2,5/D2/2/35	19
56.703.5153.6	WKF 2,5/D2/2/35 BLAU	19
56.703.5253.0	WKF 2,5 / D / D / 35	27
56.703.9053.0	WKF 2,5 SL / 35	19
56.703.9153.0	WKF 2,5 / D 2/2 / SL/35	19
56.703.9253.0	WKF 2,5 / D2/SL35/8113	36
56.703.9253.0	WKF 2,5 / D2/SL35/8113	308
56.703.9353.0	WKF 2,5 / D 1/2 /SL/35	28
56.703.9453.0	WKIF 2,5 N-D-SL	55
56.703.9553.0	WKIF 2,5 NT-D-SL	55
56.703.9653.0	WKIF 2,5 D	58
56.703.9753.0	WKIF 2,5 D-D	55
56.703.9853.0	WKIF 2,5 D-D-SL	55
56.704.0053.0	WKF 4 / 35	19
56.704.0053.6	WKF 4 / 35 BLAU	19
56.704.2053.0	WKF 4 TKM / 35	39
56.704.4053.0	WKF 4 TKG / 35	38
56.704.5053.0	WKF 4/D1/2/35	27
56.704.5053.6	WKF 4/D1/2/35 BLAU	27
56.704.6953.1	ETAGENKLEMME	30
56.704.7053.0	WKF 4 E/35	30
56.704.7153.5		32
56.704.7153.9		32
56.704.7253.5		32
56.704.7353.5		32
56.704.7453.9		32
56.704.7553.5		32
56.704.7553.9		32
56.704.7953.5		32
56.704.8053.9		32
56.704.8153.0	WKF 4 NT / 35	24
56.704.8253.5		32
56.704.8353.5		32
56.704.9053.0	WKF 4 SL / 35/V0	19
56.704.9253.0	WKF 4 E/SL/35	31
56.704.9353.0	WKF 4/D1/2/SL/35	29
56.704.9953.0		31
56.704.XX53.5		32
56.704.XX53.9		32
56.706.0053.0	WKF 6/35	21
56.706.0053.6	WKF 6/35 BLAU	21
56.706.9053.0	WKF 6SL/35	23
56.710.0053.0	WKF 10/35	21
56.710.0053.6	WKF 10/35 BLAU	21
56.710.9053.0	WKF 10SL/35	23
56.716.0053.0	WKF 16/35	21
56.716.0053.6	WKF 16/35 BLAU	21
56.716.1153.0	WKIF 16/35 GRAU	25
56.716.1153.6	WKIF 16/35 BLAU	25
56.716.8153.0	WKIF 16 NT/35	25
56.716.9053.0	WKF 16SL/35	23
56.716.9153.0	WKIF 16 SL/35	25
56.904.4055.0	9700 B/30 SI E14/S35/V0	128
56.925.4055.0	9700 B/30 SI E18/S35/V0	128
57.007.0053.0	SSW-V.24//TTY	553
57.007.0153.0	SSW-V.24//RS422	553
57.007.0253.0	SSW-V.24//RS485	554
57.110.1555.0	9760 U/8 TKE 220 V/V0	133
57.110.1655.0	9760 U/8 TKE 48 V/V0	133
57.403.6955.1	WKN2,5E / U VB SW/V0	116
57.403.7055.0	WKN2,5E / U V0	116
57.404.6255.9	WK 4 E/U LED+PO 24LD/V0	115
57.404.6955.1	WK 4E/UVB SW/V0	114
57.404.7055.0	WK 4E/U /V0	114
57.404.7255.5	WK 4 E/U LD +P O 24/V0	115
57.404.7455.9	WK 4 E/U LD -P O 24/V0	115
57.404.7955.5	WK 4 E / U G2/V0	115
57.404.8055.9	WK 4 E / U G-ULR/V0	115
57.404.8155.9	WK 4 E / U GU/V0	115
57.404.8255.5	WK 4 E / U GO/V0	115
57.404.8355.5	WK 4 E / U G-URL/V0	115
57.404.8455.5	WK 4 E / U LD 42V/V0	115
57.404.8755.5	WK 4 E/U LDG +P O 24/V0	115
57.404.8855.9	WK 4 E / U G2/1/V0	115
57.404.XX55.5		115
57.404.XX55.9		115
57.503.0055.0	WK 2,5 / U /V0	101
57.503.0055.6	WK 2,5 / U BL / V0	102
57.503.2055.0	WK 2,5U/8113S/H/V0	137
57.503.2055.0	WK 2,5U/8113S/H/V0	311
57.503.2155.0	WK2,5U/D/8113S/V.../V0	134
57.503.2155.0	WK2,5U/D/8113S/V.../V0	312
57.503.2255.0	WK2,5U/D/8113S/V/LD25V0	134
57.503.2255.0	WK2,5U/D/8113S/V/LD25V0	312
57.503.2355.0	WK2,5U/D/8113S/V/LD50V0	135
57.503.2355.0	WK2,5U/D/8113S/V/LD50V0	313
57.503.2555.6	WK2,5U/D/8113S/V/VK/V0	135
57.503.2555.6	WK2,5U/D/8113S/V/VK/V0	313
57.503.2655.0	WK2,5U / 8113S/V... /V0	136
57.503.2655.6		310
57.503.2755.0	WK2,5U/8113S/V/LED25/V0	136

contents

Part no.	Type	section / page
57.503.2755.0	WK2,5U/8113S/V/LED25/V0	310
57.503.2855.0	WK2,5U/8113S/V/LED50/V0	137
57.503.2855.0	WK2,5U/8113S/V/LED50/V0	311
57.503.3055.6	WK2,5U/8113S/V/VK/V0	137
57.503.3055.6	WK2,5U/8113S/V/VK/V0	311
57.503.7055.0	WK 2,5-4 KOI /U /V0	120
57.503.7155.0	WK 2,5-4 KOI /U-NGN /V0	120
57.503.7255.0	WK 2,5-4 KOI /U-PGN /V0	121
57.503.7855.0	WK 2,5-4 KI/U /V0	118
57.503.7955.0	WK 2,5-4 KI/U-NGN /V0	118
57.503.8055.0	WK2,5-4 KI/U-PGN /V0	118
57.503.8855.0	WK 2,5-3 D/U /V0	118
57.503.8955.0	WK 2,5-3 D/U-NGN /V0	118
57.503.9055.0	WK 2,5-3 D/U-PGN /V0	118
57.504.0055.0	WK 4 / U /V0	69
57.504.0055.6	WK 4 / U BL / V0	69
57.504.1055.0	WK 4 / U F1/V0	142
57.504.1155.0	WK 4 / U F2/V0	142
57.504.1655.0	WK 4 SI-D/U 5 X25/V0	126
57.504.1755.0	WK 4 SI-D/U 5 X20/V0	126
57.504.2055.0	WK 4 TKM/U /V0	101
57.504.2055.6	WK 4 TKM/U BL /V0	123
57.504.2355.0	WK 4 TKM P3/U /V0	123
57.504.2755.0	WK 4 3-6 S 1K/IW/U/V0	139
57.504.2855.0	WK 4 5S2,8 1K/IW/U/V0	139
57.504.3655.0	WK / 5-10S / U/V0	139
57.504.3755.0	WK 4 3-6 S 1K / U / V0	138
57.504.3855.0	WK 4 5S2,8 1K / U/V0	138
57.504.4055.0	WK 4 TKG/U /V0	101
57.504.4455.0	WK 4 TKS D / U V0	123
57.504.4555.0	WK 4 TKG-TRST / U/V0	123
57.504.4855.0	WK 4 TKG-TRST P3/ U/V0	123
57.504.5055.0	WK 4/D1/2U/V0	112
57.504.5055.6	WK 4 / D 1/2 U/V0 BLAU	112
57.504.5155.0	WK 4/D2/2U/V0	112
57.504.5155.6	WK 4/D2/2U BL/V0	112
57.504.5255.0	WK 4/D E U/V0	113
57.504.6255.0	WK / 4-8S / U/V0	141
57.504.6355.0	WK / 4-8S / IW / U/V0	141
57.504.6655.0	WK / 3-6S / U/V0	140
57.504.6755.0	WK / 3-6S / IW / U/V0	140
57.504.7355.0	WK 4 / 3-6S KO/U/V0	141
57.504.8155.0	WKN 4ETK/U/V0	69
57.504.9055.0	WK 4 SL / U /V0	69
57.504.9155.0	WK 4/D2/2SLU /V0	113
57.504.9255.0	WK 4E SL/U /V0	115
57.506.0055.0	WK 6 / U /V0	101
57.506.0055.6	WK 6 / U BL / V0	101
57.506.9055.0	WK 6 SL / U /V0	101
57.510.0155.0	WKN 10/U /V0	101
57.510.0155.6	WKN10 / U BL / V0	101
57.510.1155.0	WKI 10 / U/V0	78
57.510.1155.6	WKI 10 / U BLAU/V0	78
57.510.8155.0	WKN 10ETK/U/V0	106
57.510.8255.0	WKI 10 ETK/U/V0	80
57.510.9055.0	WKN10 SL/U /V0	101
57.516.0155.0	WKN16 / U /V0	104
57.516.0155.6	WKN16 / U BL / V0	104
57.516.1155.0	WKI 16 / U/V0	69
57.516.1155.6	WKI 16 / U BLAU/V0	69
57.516.8155.0	WKN 16ETK/U/V0	107
57.516.8255.0	WKI 16 ETK/U/V0	69
57.516.9055.0	WKN16 SL/U /V0	109
57.535.0155.0	WKN35 / U /V0	101
57.535.0155.6	WKN35 / U BL / V0	101
57.535.1155.0	WKI 35 / U/V0	79
57.535.1155.6	WKI 35 / U BLAU/V0	79
57.535.9055.0	WKN35 SL/U / V0	101
57.570.0155.0	WKN70 / U /V0	105
57.570.0155.6	WKN70 / U BL / V0	105
57.570.9055.0	WKN 70 SL/U	110
57.597.0155.0	WKN150 / U /V0	105
57.597.0155.6	WKN150/ U BL / V0	105
57.603.0055.0	WKB 2,5 / U/V0	204
57.603.3555.0	WKB 2,5 / B / U/V0	205
57.800.0053.0	24 V 1 SCHLIESSER	448
57.800.0353.0	220 V AC 1 SCHLIESSER	450
57.800.5053.0	24/48V 1 UMSCHALTER	448
57.800.5153.0	110/220V 1 UMSCHALTER	450
57.800.7053.0	24 V 2 UMSCHALTER	449
57.801.0053.0	WEG LEERG. F. 4A	592
57.801.5053.0	WEG LEERG. F. 4A	592
57.801.5153.0	WEG LEERG. F. 6A	593
57.801.5253.0	WEG LEERG. F. 8A	593
57.802.1053.0	UET +- 10 V	506
57.802.1153.0	UET-P +- 10 V	507
57.802.1353.0	UET-P +- 20 MA	507
57.802.1453.0	UET-P +- 199MV	507
57.802.2053.0	UET/LCD +- 10 V	506
57.802.2153.0	UET-P/LCD +-10 V	507
57.802.2253.0	UET/LCD +- 20 MA	506
57.802.2353.0	UET-P/LCD +-20MA	507
57.802.3053.0	SR 4-20 MA/UE 9,5-40VDC	452
57.803.8053.0	KSQ 10 V	509
57.806.0053.0	AKB 10 V / 20MA	504
57.806.0253.0	AKB 20MA / 10 V	504
57.806.0353.0	AKB 4-20MA / 10 V	504
57.806.0653.0	AKT 10 V / 20MA	505
57.806.0753.0	AKT 20MA / 10 V	505
57.806.0853.0	AKT 4-20MA / 10 V	505
57.806.0953.0	AKT 10 V /4-20MA	505
57.806.1053.0	AKT +- 10 V /+-10 V	505
57.806.1153.0	AKT 20MA / 20MA	505
57.806.1253.0	AKT 20MA /4-20MA	505
57.806.1353.0	AKT 4-20MA / 20MA	505
57.806.1553.0	AKB 10 V /4-20MA	504
57.806.2153.0	AKT -+ 10 V /4-20MA	505
57.806.2253.0	AKT -+ 10 V /0-10 V	505
57.806.2653.0	AKT 0-10 V /-+10 V	505
57.806.2753.0	AKT 0-20MA /-+10 V	505
57.806.5553.0	AKT 4-20MA /-+10 V	505
57.806.5653.0		505
57.904.0055.0	9785U/10 OHM/V0	130
57.904.0155.0	9785U/20 OHM/V0	130
57.904.0255.0	9785U/50 OHM/V0	130
57.904.0355.0	9785U/100 OHM/V0	130
57.904.0455.0	9785U/200 OHM/V0	130
57.904.0555.0	9785U/500 OHM/V0	130
57.904.0655.0	9785U/1 KOHM/V0	130
57.904.0755.0	9785U/2 KOHM/V0	130
57.904.0855.0	9785U/5 KOHM/V0	130
57.904.0955.0	9785U/10 KOHM/V0	130
57.904.1055.0	9785U/20 KOHM/V0	130
57.904.1155.0	9785U/50 KOHM/V0	130
57.904.2055.0	9786U/12/V0	131
57.904.3955.0	9785U/10 OHM-SPT/V0	130
57.904.4155.0	9785U/20 OHM-SPT/V0	130
57.904.4255.0	9785U/50 OHM-SPT/V0	130
57.904.4355.0	9785U/100 OHM-SPT/V0	130
57.904.4455.0	9785U/200 OHM-SPT/V0	130
57.904.4555.0	9785U/500 OHM-SPT/V0	130
57.904.4655.0	9785U/1 KOHM-SPT/V0	130
57.904.4755.0	9785U/2 KOHM-SPT/V0	130
57.904.4855.0	9785U/5 KOHM-SPT/V0	130
57.904.4955.0	9785U/10 KOHM-SPT/V0	130
57.904.5055.0	9785U/20 KOHM-SPT/V0	130
57.904.5155.0	9785U/50 KOHM-SPT/V0	130
57.904.5355.0	WK 4 / THSI5 U/V0	124
57.904.5455.0	WK 4/THSI 5 LED 12U /V0	124
57.904.5555.0	WK 4/THSI 5 LED 24U /V0	124
57.904.5655.0	WK 4/THSI 5 LED 60U /V0	124
57.904.5755.0	WK 4/THSI 5 GL 250U /V0	124
57.904.5855.0	WK 4/THSI 5 GL 500U /V0	124
57.904.6355.0	WK 4/THSI6,3 U /V0	124
57.904.6455.0	WK 4/THSI6,3 LED 12U/V0	124
57.904.6555.0	WK 4/THSI6,3 LED 24U/V0	124
57.904.6655.0	WK 4/THSI6,3 LED 60U/V0	124
57.904.6755.0	WK 4/THSI6,3 GL 250U/V0	124
57.904.6855.0	WK 4/THSI6,3 GL 500U/V0	124
57.904.7055.0	9786U/TSK NICR-CUNI/V0	132
57.904.7155.0	9786U/TSK FE-CUNI/V0	132
57.904.7255.0	9786U/TSK NICR-NI/V0	132
57.904.7355.0	9786U/TSK CU-CUNI/V0	132
57.904.7455.0	9786U/TSK E-CU-A-CU/V0	132
57.910.4955.0	WK 10/SI U D/V0	125
57.910.5055.0	WK 10/SI U 5 X 20 /V0	101
57.910.5155.0	WK 10/SI U 5 X 25 /V0	125
57.910.5255.0	WK 10/SI U 5 X 30 /V0	125
57.910.5355.0	WK 10/SI U 6,3 X 32 /V0	125
57.910.5455.0	WK 10/SI U 5X20M.NGL/V0	125
57.910.5755.0	WK 10/SIU6,3X32M.NGL/V0	125
57.910.5855.0	WK 10/SI U 5X20M.GLB/V0	125
57.910.6155.0	WK 10/SIU6,3X32M.GLB/V0	125
59.195.0055.0	RFK 1 / 95 F PA/V0	156
59.195.0155.0	RFK 1 / 95 K PA/V0	156
59.195.0255.0	RFK 1 / 95 FK PA/V0	156
59.195.1055.0	RFK 1 / 95 FM PA/V0	156
59.195.1255.0	RFK 1 / 95 FMK PA/V0	156
59.197.0155.0	RFK 1 / 150 K PA/V0	157
59.197.0255.0	RFK 1 / 150 FK PA/V0	157
59.197.1255.0	RFK 1 / 150 FMK PA/V0	157
59.198.0055.0	RFK 1 / 185 F PA/V0	158
59.198.1055.0	RFK 1 / 185 FM PA/V0	158
59.199.0055.0	RFK 1 / 240 F PA/V0	159
59.199.0155.0	RFK 1 / 240 K PA/V0	159
59.199.0255.0	RFK 1 / 240 FK PA/V0	159
59.199.1055.0	RFK 1 / 240 FM PA/V0	159
59.199.1255.0	RFK 1 / 240 FMK PA/V0	159
59.900.2052.0	9290 L	220
59.900.2053.6	9290 L BLAU	220
59.900.2552.0	9290 S	220
69.332.0000.0	TS M4 / M6-32	219
69.335.0253.0	TS M3 S35	219
69.335.0453.0	TS M4 S35	219
69.335.0553.0	TS M5 S35	219
69.335.0653.0	TS M6 S35	219
69.700.0953.0	VM WKF K0..9	45
69.700.1853.0	VM WKF K0..18	45
69.920.0553.0	300 / 9708 / 2 S35	47
69.920.1053.0	WEF 1 BS/35	47
69.920.1153.0		47
70.000.0653.0	KL.ADA. BU. 6WL	689
70.005.0653.0	KL.ADA. BU. 6WR	689
70.010.0653.0	KL.ADA. ST. 6WL	689
70.015.0653.0	KL.ADA. ST. 6WR	689
70.060.1628.0	DATENEINF.OT. 16P	755
70.100.0653.3	KL.ADA. BU. 6WL	631
70.100.0653.4	KL.ADA. BU. 6WL	631
70.100.1053.3	KL.ADA. BU.10WL	631
70.100.1053.4	KL.ADA. BU.10WL	631
70.100.1653.3	KL.ADA. BU.16WL	631
70.100.1653.4	KL.ADA. BU.16WL	631
70.100.2453.3	KL.ADA. BU.24WL	631
70.100.2453.4	KL.ADA. BU.24WL	631
70.101.0653.0	KL.ADA. BUF 6WL	631
70.101.1053.0	KL.ADA. BUF10WL	631
70.101.1653.0	KL.ADA. BUF16WL	631
70.101.2453.0	KL.ADA. BUF24WL	631
70.105.0653.3	KL.ADA. BU. 6WR	631
70.105.0653.4	KL.ADA. BU. 6WR	631
70.105.1053.3	KL.ADA. BU.10WR	631
70.105.1053.4	KL.ADA. BU.10WR	631
70.105.1653.3	KL.ADA. BU.16WR	631
70.105.1653.4	KL.ADA. BU.16WR	631
70.105.2453.3	KL.ADA. BU.24WR	631
70.105.2453.4	KL.ADA. BU.24WR	631
70.106.0653.0	KL.ADA. BUF 6WR	631
70.106.1053.0	KL.ADA. BUF10WR	631
70.106.1653.0	KL.ADA. BUF16WR	631
70.106.2453.0	KL.ADA. BUF24WR	631
70.110.0653.3	KL.ADA. ST. 6WL	631
70.110.0653.4	KL.ADA. ST. 6WL	631
70.110.1053.3	KL.ADA. ST.10WL	631
70.110.1053.4	KL.ADA. ST.10WL	631
70.110.1653.3	KL.ADA. ST.16WL	631
70.110.1653.4	KL.ADA. ST.16WL	631
70.110.2453.3	KL.ADA. ST.24WL	631
70.110.2453.4	KL.ADA. ST.24WL	631
70.111.0653.0	KL.ADA. STF 6WL	631
70.111.1053.0	KL.ADA. STF10WL	631
70.111.1653.0	KL.ADA. STF10WL	631
70.111.2453.0	KL.ADA. STF24WL	631
70.115.0653.3	KL.ADA. ST. 6WR	631
70.115.0653.4	KL.ADA. ST. 6WR	631
70.115.1053.3	KL.ADA. ST.10WR	631
70.115.1053.4	KL.ADA. ST.10WR	631
70.115.1653.3	KL.ADA. ST.16WR	631
70.115.1653.4	KL.ADA. ST.16WR	631
70.115.2453.3	KL.ADA. ST.24WR	631
70.115.2453.4	KL.ADA. ST.24WR	631
70.116.0653.0	KL.ADA. STF 6WR	631
70.116.1053.0	KL.ADA. STF10WR	631
70.116.1653.0	KL.ADA. STF16WR	631
70.116.2453.0	KL.ADA. STF24WR	631
70.120.0353.3	KL.ADA. BU. 3WL	643
70.120.0353.4	KL.ADA. BU. 3WL	643
70.120.0653.3	KL.ADA. BU. 6WL	643
70.120.0653.4	KL.ADA. BU. 6WL	643
70.120.1053.3	KL.ADA. BU.10WL	643
70.120.1053.4	KL.ADA. BU.10WL	643
70.121.0353.0	KL.ADAP.BUF 3P WL	643
70.121.0653.0	KL.ADAP.BUF 6P WL	643
70.121.1053.0	KL.ADAP.BUF10P WL	643
70.125.0353.3	KL.ADA. BU. 3WR	643
70.125.0353.4	KL.ADA. BU. 3WR	643
70.125.0653.3	KL.ADA. BU. 6WR	643
70.125.0653.4	KL.ADA. BU. 6WR	643
70.125.1053.3	KL.ADA. BU.10WR	643
70.125.1053.4	KL.ADA. BU.10WR	643
70.126.0353.0	KL.ADAP.BUF 3P WR	643
70.126.0653.0	KL.ADAP.BUF 6P WR	643
70.126.1053.0	KL.ADAP.BUF10P WR	643
70.130.0353.3	KL.ADA. ST. 3WL	643
70.130.0353.4	KL.ADA. ST. 3WL	643
70.130.0653.3	KL.ADA. ST. 6WL	643
70.130.0653.4	KL.ADA. ST. 6WL	643
70.130.1053.3	KL.ADA. ST.10WL	643
70.130.1053.4	KL.ADA. ST.10WL	643
70.131.0353.0	KL.ADAP.STF 3P WL	643
70.131.0653.0	KL.ADAP.STF 6P WL	643
70.131.1053.0	KL.ADAP.STF10P WL	643
70.135.0353.3	KL.ADA. ST. 3WR	643
70.135.0353.4	KL.ADA. ST. 3WR	643
70.135.0653.3	KL.ADA. ST. 6WR	643
70.135.0653.4	KL.ADA. ST. 6WR	643
70.135.1053.3	KL.ADA. ST.10WR	643
70.135.1053.4	KL.ADA. ST.10WR	643
70.136.0353.0	KL.ADAP.STF 3P WR	643
70.136.0653.0	KL.ADAP.BUF 3P WR	643
70.136.1053.0	KL.ADAP.BUF 3P WR	643
70.200.0653.0	BUCHSENEINSATZ	689
70.210.0653.0	STECKEREINSATZ	689
70.300.0640.0	BUCHSENEINSATZ	631
70.300.1040.0	BUCHSENEINSATZ	631
70.300.1640.0	BUCHSENEINSATZ	631

contents of part number

contents PART NUMBER

Part no.	Type	section / page
70.300.2440.0	BUCHSENEINSATZ	631
70.300.3253.0	BUCHSENEINSATZ	631
70.300.4840.0	BUCHSENEINSATZ	631
70.301.0640.0	BU.EINSATZ VERGOL	631
70.301.1040.0	BU.EINSATZ VERGOL	631
70.301.1640.0	BU.EINSATZ VERGOL	631
70.301.2440.0	BU.EINSTAZ VERGOL	631
70.310.0640.0	STECKEREINSATZ	631
70.310.1040.0	STECKEREINSATZ	631
70.310.1640.0	STECKEREINSATZ	631
70.310.2440.0	STECKEREINSATZ	631
70.310.3253.0	STECKEREINSATZ	631
70.310.4840.0	STECKEREINSATZ	631
70.311.0640.0	ST.EINSATZ VERGOL	631
70.311.1040.0	ST.EINSATZ VERGOL	631
70.311.1640.0	ST.EINSATZ VERGOL	631
70.311.2440.0	ST.EINSATZ VERGOL	631
70.320.0628.0	GEHAEUSEUNTERTEIL	634
70.320.0628.9	GEHAEUSEUNTERTEIL	770
70.320.0638.0	GEH.UT. 6 POL.	684
70.320.1028.0	GEHAEUSEUNTERTEIL	638
70.320.1028.9	GEHAEUSEUNTERTEIL	770
70.320.1038.0	GEH.UT. 10 POL.	684
70.320.1628.0	GEHAEUSEUNTERTEIL	638
70.320.1628.9	GEHAEUSEUNTERTEIL	770
70.320.1638.0	GEH.UT. 16 POL.	684
70.320.2428.0	GEHAEUSEUNTERTEIL	638
70.320.2428.9	GEHAEUSEUNTERTEIL	770
70.320.2438.0	GEH.UT. 24 POL.	684
70.320.3228.0	GEHAEUSEUNTERTEIL	638
70.320.4828.0	GEHAEUSEUNTERTEIL	634
70.320.4828.9	GEHAEUSEUNTERTEIL	770
70.325.0628.0	GEHAEUSEUNTERTEIL	635
70.325.0628.9	GEHAEUSEUNTERTEIL	771
70.325.1028.0	GEHAEUSEUNTERTEIL	639
70.325.1028.9	GEHAEUSEUNTERTEIL	771
70.325.1628.0	GEHAEUSEUNTERTEIL	639
70.325.1628.9	GEHAEUSEUNTERTEIL	771
70.325.2428.0	GEHAEUSEUNTERTEIL	639
70.325.2428.9	GEHAEUSEUNTERTEIL	771
70.325.4828.0	GEHAEUSEUNTERTEIL	635
70.325.4828.9	GEHAEUSEUNTERTEIL	771
70.330.0628.9	GEHAEUSEUNTERTEIL	770
70.330.0635.0	GEHAEUSEUNTERTEIL	634
70.330.0635.1	GEHAEUSEUNTERTEIL	634
70.330.1028.9	GEHAEUSEUNTERTEIL	770
70.330.1035.0	GEHAEUSEUNTERTEIL	638
70.330.1035.1	GEHAEUSEUNTERTEIL	638
70.330.1635.0	GEHAEUSEUNTERTEIL	638
70.330.1635.1	GEHAEUSEUNTERTEIL	638
70.330.2428.9	GEHAEUSEUNTERTEIL	770
70.330.2435.0	GEHAEUSEUNTERTEIL	638
70.330.2435.1	GEHAEUSEUNTERTEIL	638
70.331.0628.9	GEHAEUSEUNTERTEIL	770
70.331.0635.0	GEHAEUSEUNTERTEIL	634
70.331.0635.1	GEHAEUSEUNTERTEIL	634
70.331.1028.9	GEHAEUSEUNTERTEIL	770
70.331.1035.0	GEHAEUSEUNTERTEIL	638
70.331.1035.1	GEHAEUSEUNTERTEIL	638
70.331.1635.0	GEHAEUSEUNTERTEIL	638
70.331.1635.1	GEHAEUSEUNTERTEIL	638
70.331.2428.9	GEHAEUSEUNTERTEIL	770
70.331.2435.0	GEHAEUSEUNTERTEIL	638
70.331.2435.1	GEHAEUSEUNTERTEIL	638
70.331.4828.9	GEHAEUSEUNTERTEIL	770
70.331.4835.0	GEHAEUSEUNTERTEIL	634
70.331.4835.1	GEHAEUSEUNTERTEIL	634
70.331.4835.3	GEHAEUSEUNTERTEIL	634
70.333.0628.9	GEHAEUSEUNTERTEIL	771
70.333.0635.0	GEHAEUSEUNTERTEIL	635
70.333.0635.1	GEHAEUSEUNTERTEIL	635
70.333.1028.9	GEHAEUSEUNTERTEIL	771
70.333.1035.0	GEHAEUSEUNTERTEIL	639
70.333.1035.1	GEHAEUSEUNTERTEIL	639
70.333.1635.0	GEHAEUSEUNTERTEIL	639
70.333.1635.1	GEHAEUSEUNTERTEIL	639
70.333.2428.9	GEHAEUSEUNTERTEIL	771
70.333.2435.0	GEHAEUSEUNTERTEIL	639
70.333.2435.1	GEHAEUSEUNTERTEIL	639
70.340.0628.9	GEHAEUSEUNTERTEIL	771
70.340.0635.0	GEHAEUSEUNTERTEIL	635
70.340.0635.1	GEHAEUSEUNTERTEIL	635
70.340.1028.9	GEHAEUSEUNTERTEIL	771
70.340.1035.0	GEHAEUSEUNTERTEIL	639
70.340.1035.1	GEHAEUSEUNTERTEIL	639
70.340.1635.0	GEHAEUSEUNTERTEIL	639
70.340.1635.1	GEHAEUSEUNTERTEIL	639
70.340.2428.9	GEHAEUSEUNTERTEIL	771
70.340.2435.0	GEHAEUSEUNTERTEIL	639
70.340.2435.1	GEHAEUSEUNTERTEIL	639
70.341.0628.9	GEHAEUSEUNTERTEIL	771
70.341.0635.0	GEHAEUSEUNTERTEIL	635
70.341.0635.1	GEHAEUSEUNTERTEIL	635
70.341.1028.9	GEHAEUSEUNTERTEIL	771
70.341.1035.0	GEHAEUSEUNTERTEIL	639
70.341.1035.1	GEHAEUSEUNTERTEIL	639
70.341.1635.0	GEHAEUSEUNTERTEIL	639
70.341.1635.1	GEHAEUSEUNTERTEIL	639
70.341.2428.9	GEHAEUSEUNTERTEIL	771
70.341.2435.0	GEHAEUSEUNTERTEIL	639
70.341.2435.1	GEHAEUSEUNTERTEIL	639
70.341.4828.9	GEHAEUSEUNTERTEIL	771
70.341.4835.1	GEHAEUSEUNTERTEIL	635
70.341.4835.3	GEHAEUSEUNTERTEIL	635
70.342.0628.9	GEHAEUSEUNTERTEIL	771
70.342.0635.0	GEHAEUSEUNTERTEIL	635
70.342.0635.1	GEHAEUSEUNTERTEIL	635
70.342.1028.9	GEHAEUSEUNTERTEIL	771
70.342.1035.0	GEHAEUSEUNTERTEIL	639
70.342.1035.1	GEHAEUSEUNTERTEIL	639
70.342.1635.0	GEHAEUSEUNTERTEIL	639
70.342.1635.1	GEHAEUSEUNTERTEIL	639
70.342.2428.9	GEHAEUSEUNTERTEIL	771
70.342.2435.0	GEHAEUSEUNTERTEIL	639
70.342.2435.1	GEHAEUSEUNTERTEIL	639
70.343.0628.9	GEHAEUSEUNTERTEIL	771
70.343.0635.0	GEHAEUSEUNTERTEIL	635
70.343.0635.1	GEHAEUSEUNTERTEIL	635
70.343.1028.9		771
70.343.1035.0	GEHAEUSEUNTERTEIL	639
70.343.1035.1	GEHAEUSEUNTERTEIL	639
70.343.1635.0	GEHAEUSEUNTERTEIL	639
70.343.1635.1	GEHAEUSEUNTERTEIL	639
70.343.2428.9	GEHAEUSEUNTERTEIL	771
70.343.2435.0	GEHAEUSEUNTERTEIL	639
70.343.2435.1	GEHAEUSEUNTERTEIL	639
70.344.4828.9	GEHAEUSEUNTERTEIL	771
70.344.4835.1	GEHAEUSEUNTERTEIL	635
70.350.0628.7	GEHAEUSEOBERTEIL	769
70.350.0635.0	GEHAEUSEOBERTEIL	633
70.350.0635.1	GEHAEUSEOBERTEIL	633
70.350.0635.2	GEHAEUSEOBERTEIL	633
70.350.0635.3	GEHAEUSEOBERTEIL	633
70.350.0645.1		684
70.350.1028.7	GEHAEUSEOBERTEIL	769
70.350.1035.0	GEHAEUSEOBERTEIL	637
70.350.1035.1	GEHAEUSEOBERTEIL	637
70.350.1035.2		637
70.350.1035.3	GEHAEUSEOBERTEIL	637
70.350.1045.1		684
70.350.1628.7	GEHAEUSEOBERTEIL	769
70.350.1635.0	GEHAEUSEOBERTEIL	637
70.350.1635.1	GEHAEUSEOBERTEIL	637
70.350.1635.2		637
70.350.1635.3	GEHAEUSEOBERTEIL	637
70.350.2428.7		769
70.350.2435.0	GEHAEUSEOBERTEIL	637
70.350.2435.1	GEHAEUSEOBERTEIL	637
70.350.2435.2	GEHAEUSEOBERTEIL	637
70.350.2435.3	GEHAEUSEOBERTEIL	637
70.350.3235.0	GEHAEUSEOBERTEIL	637
70.350.3235.1	GEHAEUSEOBERTEIL	637
70.350.3235.2	GEHAEUSEOBERTEIL	637
70.350.3235.3	GEHAEUSEOBERTEIL	637
70.350.4828.7	GEHAEUSEOBERTEIL	769
70.350.4835.0	GEHAEUSEOBERTEIL	633
70.350.4835.1	GEHAEUSEOBERTEIL	633
70.350.4835.2	GEHAEUSEOBERTEIL	633
70.350.4835.3	GEHAEUSEOBERTEIL	633
70.351.0635.0	GEHAEUSEOBERTEIL	633
70.351.0635.1		633
70.351.0635.2	GEHAEUSEOBERTEIL	633
70.351.0635.3	GEHAEUSEOBERTEIL	633
70.351.1035.0	GEHAEUSEOBERTEIL	637
70.351.1035.1	GEHAEUSE-OBERTEIL	637
70.351.1035.2	GEHAEUSEOBERTEIL	637
70.351.1035.3	GEHAEUSEOBERTEIL	637
70.351.1635.0	GEHAEUSEOBERTEIL	637
70.351.1635.1	GEHAEUSE-OBERTEIL	637
70.351.1635.2	GEHAEUSEOBERTEIL	637
70.351.1635.3	GEHAEUSEOBERTEIL	637
70.351.2435.0	GEHAEUSEOBERTEIL	637
70.351.2435.1	GEHAEUSE-OBERTEIL	637
70.351.2435.2	GEHAEUSEOBERTEIL	637
70.351.2435.3	GEHAEUSEOBERTEIL	637
70.352.0628.7	GEHAEUSEOBERTEIL	769
70.352.0635.0	GEHAEUSEOBERTEIL	633
70.352.0635.1	GEHAEUSEOBERTEIL	633
70.352.0635.2	GEHAEUSEOBERTEIL	633
70.352.0635.3	GEHAEUSEOBERTEIL	633
70.352.1028.7		769
70.352.1035.0	GEHAEUSEOBERTEIL	637
70.352.1035.1	GEHAEUSEOBERTEIL	637
70.352.1035.2	GEHAEUSEOBERTEIL	637
70.352.1035.3	GEHAEUSEOBERTEIL	637
70.352.1635.0	GEHAEUSEOBERTEIL	637
70.352.1635.1	GEHAEUSEOBERTEIL	637
70.352.1635.2	GEHAEUSEOBERTEIL	637
70.352.1635.3	GEHAEUSEOBERTEIL	637
70.352.2428.7	GEHAEUSEOBERTEIL	773
70.352.2435.0	GEHAEUSEOBERTEIL	637
70.352.2435.1	GEHAEUSEOBERTEIL	637
70.352.2435.2	GEHAEUSEOBERTEIL	637
70.352.2435.3	GEHAEUSEOBERTEIL	637
70.352.3235.0	GEHAEUSEOBERTEIL	637
70.352.3235.1	GEHAEUSEOBERTEIL	637
70.352.3235.2	GEHAEUSEOBERTEIL	637
70.352.3235.3	GEHAEUSEOBERTEIL	637
70.352.4828.7	GEHAEUSEOBERTEIL	769
70.352.4835.0	GEHAEUSEOBERTEIL	633
70.352.4835.1	GEHAEUSEOBERTEIL	633
70.352.4835.2	GEHAEUSEOBERTEIL	633
70.352.4835.3	GEHAEUSEOBERTEIL	633
70.353.0635.0	GEHAEUSEOBERTEIL	633
70.353.0635.1	GEHAEUSEOBERTEILE	633
70.353.0635.2	GEHAEUSEOBERTEIL	633
70.353.0635.3	GEHAEUSEOBERTEIL	633
70.353.0645.1		684
70.353.1035.0	GEHAEUSEOBERTEIL	637
70.353.1035.1	GEHAEUSEOBERTEIL	637
70.353.1035.2	GEHAEUSEOBERTEIL	637
70.353.1035.3	GEHAEUSEOBERTEIL	637
70.353.1635.0	GEHAEUSEOBERTEIL	637
70.353.1635.1	GEHAEUSEOBERTEIL	637
70.353.1635.2	GEHAEUSEOBERTEIL	637
70.353.1635.3	GEHAEUSEOBERTEIL	637
70.353.1645.1		684
70.353.2435.0	GEHAEUSEOBERTEIL	637
70.353.2435.1	GEHAEUSEOBERTEIL	637
70.353.2435.2	GEHAEUSEOBERTEIL	637
70.353.2435.3	GEHAEUSEOBERTEIL	637
70.353.2445.1		684
70.353.3235.1	GEHAEUSEOBERTEIL	637
70.353.3235.2	GEHAEUSEOBERTEIL	637
70.353.4828.7	GEHAEUSEOBERTEIL	769
70.353.4835.1	GEHAEUSEOBERTEIL	633
70.353.4835.2	GEHAEUSEOBERTEIL	633
70.354.0628.7	GEHAEUSEOBERTEIL	769
70.354.0635.0	GEHAEUSEOBERTEIL	633
70.354.0635.1	GEHAEUSEOBERTEIL	633
70.354.0635.2	GEHAEUSEOBERTEIL	633
70.354.0635.3	GEHAEUEOBERTEIL	633
70.354.1028.7	GEHAEUSEOBERTEIL	769
70.354.1035.0	GEHAEUSEOBERTEIL	637
70.354.1035.1	GEHAEUSEOBERTEIL	637
70.354.1035.2	GEHAEUSEOBERTEIL	637
70.354.1035.3	GEHAEUSEOBERTEIL	637
70.354.1628.7	GEHAEUSEOBERTEIL	769
70.354.1635.0	GEHAEUSEOBERTEIL	637
70.354.1635.1	GEHAEUSEOBERTEIL	637
70.354.1635.2	GEHAEUSEOBERTEIL	637
70.354.1635.3	GEHAEUSEOBERTEIL	637
70.354.2428.7		769
70.354.2435.0	GEHAEUSEOBERTEIL	637
70.354.2435.1	GEHAEUSEOBERTEIL	637
70.354.2435.2	GEHAEUSEOBERTEIL	637
70.354.2435.3	GEHAEUSEOBERTEIL	637
70.354.3235.1	GEHAEUSEOBERTEIL	637
70.354.3235.2	GEHAEUSEOBERTEIL	637
70.354.4828.7	GEHAEUSEOBERTEIL	769
70.354.4835.1	GEHAEUSEOBERTEIL	633
70.354.4835.2	GEHAEUSEOBERTEIL	633
70.355.1028.7	GEHAEUSEOBERTEIL	769
70.355.1035.0	GEHAEUSEOBERTEIL	637
70.355.1035.1	GEHAEUSE-OBERTEIL	637
70.355.1035.2	GEHAEUSE-OBERTEIL	637
70.355.1035.3	GEHAEUSEOBERTEIL	637
70.355.1628.7	GEHAEUSEOBERTEIL	769
70.355.1635.0	GEHAEUSEOBERTEIL	637
70.355.1635.1	GEHAEUSE-OBERTEIL	637
70.355.1635.2	GEHAEUSE-OBERTEIL	637
70.355.1635.3	GEHAEUSEOBERTEIL	637
70.355.2435.0	GEHAEUSEOBERTEIL	637
70.355.2435.1	GEHAEUSE-OBERTEIL	637
70.355.2435.2	GEHAEUSE-OBERTEIL	637
70.355.2435.3	GEHAEUSEOBERTEIL	637
70.356.1035.0	GEHAEUSEOBERTEIL	637
70.356.1035.1	GEHAEUSE-OBERTEIL	637
70.356.1035.2	GEHAEUSEOBERTEIL	637
70.356.1035.3	GEHAEUSEOBERTEIL	637
70.356.1635.0	GEHAEUSEOBERTEIL	637
70.356.1635.1	GEHAEUSE-OBERTEIL	637
70.356.1635.2	GEHAEUSEOBERTEIL	637
70.356.1635.3	GEHAEUSEOBERTEIL	637
70.356.2435.0	GEHAEUSEOBERTEIL	637
70.356.2435.1	GEHAEUSE-OBERTEIL	637
70.356.2435.2	GEHAEUSEOBERTEIL	637
70.356.2435.3	GEHAEUSEOBERTEIL	637
70.357.1035.0	GEHAEUSEOBERTEIL	637
70.357.1035.1	GEHAEUSE-OBERTEIL	637
70.357.1035.2	GEHAEUSEOBERTEIL	637
70.357.1035.3	GEHAEUSEOBERTEIL	637
70.357.1635.0	GEHAEUSEOBERTEIL	637
70.357.1635.1	GEHAEUSE-OBERTEIL	637

contents

Part no.	Type	section / page
70.357.1635.2	GEHAEUSEOBERTEIL	637
70.357.1635.3	GEHAEUSEOBERTEIL	637
70.357.2435.0	GEHAEUSEOBERTEIL	637
70.357.2435.1	GEHAEUSE-OBERTEIL	637
70.357.2435.2	GEHAEUSEOBERTEIL	637
70.357.2435.3	GEHAEUSEOBERTEIL	637
70.358.1035.0	GEHAEUSEOBERTEIL	637
70.358.1035.1	GEHAEUSEOBERTEIL	637
70.358.1035.2	GEHAEUSEOBERTEIL	637
70.358.1035.3	GEHAEUSEOBERTEIL	637
70.358.1635.0	GEHAEUSEOBERTEIL	637
70.358.1635.1	GEHAEUSEOBERTEIL	637
70.358.1635.2	GEHAEUSEOBERTEIL	637
70.358.1635.3	GEHAEUSEOBERTEIL	637
70.358.2428.7		769
70.358.2435.0	GEHAEUSEOBERTEIL	637
70.358.2435.1	GEHAEUSEOBERTEIL	637
70.358.2435.2	GEHAEUSEOBERTEIL	637
70.358.2435.3	GEHAEUSEOBERTEIL	637
70.359.1035.0	GEHAEUSEOBERTEIL	637
70.359.1035.1	GEHAEUSEOBERTEIL	637
70.359.1035.2	GEHAEUSEOBERTEIL	637
70.359.1035.3	GEHAEUSEOBERTEIL	637
70.359.1628.7		769
70.359.1635.0	GEHAEUSEOBERTEIL	637
70.359.1635.1	GEHAEUSEOBERTEIL	637
70.359.1635.2	GEHAEUSEOBERTEIL	637
70.359.1635.3	GEHAEUSEOBERTEIL	637
70.359.2435.0	GEHAEUSEOBERTEIL	637
70.359.2435.1	GEHAEUSEOBERTEIL	637
70.359.2435.2	GEHAEUSEOBERTEIL	637
70.359.2435.3	GEHAEUSEOBERTEIL	637
70.360.0628.9	GEHAEUSEOBERTEIL	769
70.360.1028.9	GEHAEUSEOBERTEIL	769
70.360.1628.9	GEHAEUSEOBERTEIL	769
70.360.2428.9	GEHAEUSEOBERTEIL	769
70.360.4828.9	GEHAEUSEOBERTEIL	769
70.362.0628.9	GEHAEUSEOBERTEIL	769
70.362.1028.9	GEHAEUSEOBERTEIL	769
70.362.1628.9	GEHAEUSEOBERTEIL	769
70.362.2428.9	GEHAEUSEOBERTEIL	772
70.362.4828.9	GEHAEUSEOBERTEIL	769
70.363.0628.9	GEHAEUSEOBERTEIL	769
70.363.1028.9	GEHAEUSEOBERTEIL	769
70.363.1628.9	GEHAEUSEOBERTEIL	769
70.363.2428.9	GEHAEUSEOBERTEIL	769
70.364.0628.9	GEHAEUSEOBERTEIL	769
70.364.1028.9	GEHAEUSEOBERTEIL	769
70.364.1628.9	GEHAEUSEOBERTEIL	769
70.364.4828.9	GEHAEUSEOBERTEIL	769
70.365.1028.9	GEHAEUSEOBERTEIL	769
70.365.1628.9	GEHAEUSEOBERTEIL	769
70.365.2428.9	GEHAEUSEOBERTEIL	769
70.367.1028.9	GEHAEUSEOBERTEIL	769
70.367.1628.9	GEHAEUSEOBERTEIL	769
70.367.2428.9	GEHAEUSEOBERTEIL	769
70.368.1028.9	GEHAEUSEOBERTEIL	769
70.368.1628.9	GEHAEUSEOBERTEIL	769
70.368.2428.9	GEHAEUSEOBERTEIL	769
70.369.1028.9	GEHAEUSEOBERTEIL	769
70.369.1628.9	GEHAEUSEOBERTEIL	769
70.372.0628.7	GEHAEUSEOBERTEIL	773
70.372.0635.0	GEHAEUSEOBERTEIL	733
70.372.0635.3	GEHAEUSEOBERTEIL	733
70.372.1028.7	GEHAEUSEOBERTEIL	773
70.372.1035.0	GEHAEUSEOBERTEIL	733
70.372.1035.3	GEHAEUSEOBERTEIL	733
70.372.1628.7	GEHAEUSEOBERTEIL	773
70.372.1635.0	GEHAEUSEOBERTEIL	733
70.372.1635.3	GEHAEUSEOBERTEIL	733
70.372.2428.7	GEHAEUSEOBERTEIL	773
70.372.4828.7	GEHAEUSEOBERTEIL	773
70.372.4835.3	GEHAEUSEOBERTEIL	733
70.374.1635.0		733
70.374.1635.3		733
70.374.2435.0		733
70.374.2435.3	GEHAEUSEOBERTEIL	733
70.375.4828.9	GEHAEUSEOBERTEIL	772
70.375.4835.3	GEHAEUSEOBERTEIL	733
70.377.4828.9	GEHAEUSEOBERTEIL	772
70.400.0340.0	BU.EINSATZ 660V	643
70.400.0640.0	BU.EINSATZ 660V	643
70.400.1040.0	BU.EINSATZ 660V	643
70.400.1640.0	BU.EINSATZ 660V	643
70.400.2040.0	BU.EINSATZ 660V	643
70.400.2640.0	BU.EINSATZ 660V	643
70.400.3240.0	BU.EINSATZ 660V	643
70.410.0340.0	ST.EINSATZ 660V	643
70.410.0640.0	ST.EINSATZ 660V	643
70.410.1040.0	ST.EINSATZ 660V	643
70.410.1640.0	ST.EINSATZ 660V	643
70.410.2040.0	ST.EINSATZ 660V	643
70.410.2640.0	ST.EINSATZ 660V	643
70.410.3240.0	ST.EINSATZ 660V	643
70.500.0653.0	BUCHSENEINSATZ	631

Part no.	Type	section / page
70.500.1053.0	BUCHSENEINSATZ	631
70.500.1653.0	BUCHSENEINSATZ	631
70.500.2453.0	BUCHSENEINSATZ	631
70.500.3253.0	BUCHSENEINSATZ	631
70.500.4853.0	BUCHSENEINSATZ	631
70.510.0653.0	STECKEREINSATZ	631
70.510.1053.0	STECKEREINSATZ	631
70.510.1653.0	STECKEREINSATZ	631
70.510.2453.0	STECKEREINSATZ	631
70.510.3253.0	STECKEREINSATZ	631
70.510.4853.0	STECKEREINSATZ	631
70.700.0658.0	BUCHSENEINSATZ	631
70.700.1058.0	BUCHSENEINSATZ	631
70.700.1658.0	BUCHSENEINSATZ	631
70.700.2458.0	BUCHSENEINSATZ	631
70.700.3253.0	BUCHSENEINSATZ	631
70.700.4858.0	BUCHSENEINSATZ	631
70.710.0658.0	STECKEREINSATZ	631
70.710.1058.0	STECKEREINSATZ	631
70.710.1658.0	STECKEREINSATZ	631
70.710.2458.0	STECKEREINSATZ	631
70.710.3253.0	STECKEREINSATZ	631
70.710.4858.0	STECKEREINSATZ	631
70.940.0653.3	ADA.I.GEH.BU. 6WL	667
70.940.0653.4	ADA.I.GEH.BU.06WL	667
70.940.1053.3	ADA.I.GEH.BU.10WL	667
70.940.1053.4	ADA.I.GEH.BU.10WL	667
70.940.1653.3	ADA.I.GEH.BU.16WL	667
70.940.1653.4	ADA.I.GEH.BU.16WL	667
70.940.2453.3	ADA.I.GEH.BU.24WL	667
70.940.2453.4	ADA.I.GEH.BU.24WL	667
70.945.0653.3	ADA.I.GEH.BU. 6WR	667
70.945.0653.4	ADA.I.GEH.BU. 6WR	667
70.945.1053.3	ADA.I.GEH.BU.10WR	667
70.945.1053.4	ADA.I.GEH.BU.10WR	667
70.945.1653.3	ADA.I.GEH.BU.16WR	667
70.945.1653.4	ADA.I.GEH.BU.16WR	667
70.945.2453.3	ADA.I.GEH.BU.24WR	667
70.945.2453.4	ADA.I.GEH.BU.24WR	667
70.950.0653.3	ADA.I.GEH.ST. 6WL	667
70.950.0653.4	ADA.I.GEH.ST.06WL	667
70.950.1053.3	ADA.I.GEH.ST.10WL	667
70.950.1053.4	ADA.I.GEH.ST.10WL	667
70.950.1653.3	ADA.I.GEH.ST.16WL	667
70.950.1653.4	ADA.I.GEH.ST.16WL	667
70.950.2453.3	ADA.I.GEH.ST.24WL	667
70.950.2453.4	ADA.I.GEH.ST.24WL	667
70.955.0653.3	ADA.I.GEH.ST. 6WR	667
70.955.0653.4	ADA.I.GEH.ST. 6WR	667
70.955.1053.3	ADA.I.GEH.ST.10WR	667
70.955.1053.4	ADA.I.GEH.ST.10WR	667
70.955.1653.3	ADA.I.GEH.ST.16WR	667
70.955.1653.4	ADA.I.GEH.ST.16WR	667
70.955.2453.3	ADA.I.GEH.ST.24WR	667
70.955.2453.4	ADA.I.GEH.ST.24WR	667
70.960.0353.3	ADA.I.GEH.BU. 3WL	671
70.960.0353.4	ADA.I.GEH.BU. 3WL	671
70.960.0653.3	ADA.I.GEH.BU. 6WL	671
70.960.0653.4	ADA.I.GEH.BU. 6WL	671
70.960.1053.3	ADA.I.GEH.BU.10WL	671
70.960.1053.4	ADA.I.GEH.BU.10WL	671
70.965.0353.3	ADA.I.GEH.BU. 3WR	671
70.965.0353.4	ADA.I.GEH. 3WR	671
70.965.0653.3	ADA.I.GEH.BU. 6WR	671
70.965.0653.4	ADA.I.GEH.BU. 6WR	671
70.965.1053.3	ADA.I.GEH.BU.10WR	671
70.965.1053.4	ADA.I.GEH.BU.10WL	671
70.970.0353.3	ADA.I.GEH.ST. 3WL	671
70.970.0353.4	ADA.I:GEH.ST. 3WL	671
70.970.0653.3	ADA.I.GEH.ST. 6WL	671
70.970.0653.4	ADA.I.GEH.ST. 6WL	671
70.970.1053.3	ADA.I.GEH.ST.10WL	671
70.970.1053.4	ADA.I.GEH.ST.10WL	671
70.975.0353.3	ADA.I.GEH.ST. 3WR	671
70.975.0353.4	ADA.I.GEH.ST. 3WR	671
70.975.0653.3	ADA.I.GEH.ST. 6WR	671
70.975.0653.4	ADA.I.GEH.ST. 6WR	671
70.975.1053.3	ADA.I.GEH.ST.10WR	671
70.975.1053.4	ADA.I.GEH.ST.10WR	671
71.320.1028.0	GEHAEUSEUNTERTEIL	634
71.320.1628.0	GEHAEUSEUNTERTEIL	634
71.320.2428.0	GEHAEUSEUNTERTEIL	634
71.325.1028.0	GEHAEUSEUNTERTEIL	635
71.325.1628.0	GEHAEUSEUNTERTEIL	635
71.325.2428.0	GEHAEUSEUNTERTEIL	635
71.330.1035.0	GEHAEUSEUNTERTEIL	634
71.330.1035.1	GEHAEUSEUNTERTEIL	634
71.330.1635.0	GEHAEUSEUNTERTEIL	634
71.330.1635.1	GEHAEUSEUNTERTEIL	634
71.330.2435.0	GEHAEUSEUNTERTEIL	634
71.330.2435.1	GEHAEUSEUNTERTEIL	634
71.331.1035.0	GEHAEUSEUNTERTEIL	634
71.331.1035.1	GEHAEUSEUNTERTEIL	634
71.331.1635.0	GEHAEUSEUNTERTEIL	634
71.331.1635.1	GEHAEUSEUNTERTEIL	634

Part no.	Type	section / page
71.331.2435.0	GEHAEUSEUNTERTEIL	634
71.331.2435.1	GEHAEUSEUNTERTEIL	634
71.333.1035.0	GEHAEUSEUNTERTEIL	635
71.333.1035.1	GEHAEUSEUNTERTEIL	635
71.333.1635.0	GEHAEUSEUNTERTEIL	635
71.333.1635.1	GEHAEUSEUNTERTEIL	635
71.333.2435.0	GEHAEUSEUNTERTEIL	635
71.333.2435.1	GEHAEUSEUNTERTEIL	635
71.340.1035.0	GEHAEUSEUNTERTEIL	635
71.340.1035.1	GEHAEUSEUNTERTEIL	635
71.340.1635.0	GEHAEUSEUNTERTEIL	635
71.340.1635.1	GEHAEUSEUNTERTEIL	635
71.340.2435.0	GEHAEUSEUNTERTEIL	635
71.340.2435.1	GEHAEUSEUNTERTEIL	635
71.341.1035.0	GEHAEUSEUNTERTEIL	635
71.341.1035.1	GEHAEUSEUNTERTEIL	635
71.341.1635.0	GEHAEUSEUNTERTEIL	635
71.341.1635.1	GEHAEUSEUNTERTEIL	635
71.341.2435.0	GEHAEUSEUNTERTEIL	635
71.341.2435.1	GEHAEUSEUNTERTEIL	635
71.342.1035.0	GEHAEUSEUNTERTEIL	635
71.342.1035.1	GEHAEUSEUNTERTEIL	635
71.342.1635.0	GEHAEUSEUNTERTEIL	635
71.342.1635.1	GEHAEUSEUNTERTEIL	635
71.342.2435.0	GEHAEUSEUNTERTEIL	635
71.342.2435.1	GEHAEUSEUNTERTEIL	635
71.343.1035.0	GEHAEUSEUNTERTEIL	635
71.343.1035.1	GEHAEUSEUNTERTEIL	635
71.343.1635.0	GEHAEUSEUNTERTEIL	635
71.343.1635.1	GEHAEUSEUNTERTEIL	635
71.343.2435.0	GEHAEUSEUNTERTEIL	635
71.343.2435.1	GEHAEUSEUNTERTEIL	635
71.350.1035.0	GEHAEUSEOBERTEIL	633
71.350.1035.1	GEHAEUSEOBERTEIL	633
71.350.1035.2	GEHAEUSEOBERTEIL	633
71.350.1035.3	GEHAEUSEOBERTEIL	633
71.350.1635.0	GEHAEUSEOBERTEIL	633
71.350.1635.1	GEHAEUSEOBERTEIL	633
71.350.1635.2	GEHAEUSEOBERTEIL	633
71.350.1635.3	GEHAEUSEOBERTEIL	633
71.350.2435.0	GEHAEUSEOBERTEIL	633
71.350.2435.1	GEHAEUSEOBERTEIL	633
71.350.2435.2	GEHAEUSEOBERTEIL	633
71.350.2435.3	GEHAEUSEOBERTEIL	633
71.351.1035.0	GEHAEUSEOBERTEIL	633
71.351.1035.1	GEHAEUSEOBERTEIL	633
71.351.1035.2	GEHAEUSEOBERTEIL	633
71.351.1035.3	GEHAEUSEOBERTEIL	633
71.351.1635.0	GEHAEUSEOBERTEIL	633
71.351.1635.1	GEHAEUSEOBERTEIL	633
71.351.1635.2	GEHAEUSEOBERTEIL	633
71.351.1635.3	GEHAEUSEOBERTEIL	633
71.351.2435.0	GEHAEUSEOBERTEIL	633
71.351.2435.1	GEHAEUSEOBERTEIL	633
71.351.2435.2	GEHAEUSEOBERTEIL	633
71.351.2435.3	GEHAEUSEOBERTEIL	633
71.352.1035.0	GEHAEUSEOBERTEIL	633
71.352.1035.1	GEHAEUSEOBERTEIL	633
71.352.1035.2	GEHAEUSEOBERTEIL	633
71.352.1035.3	GEHAEUSEOBERTEIL	633
71.352.1635.0	GEHAEUSEOBERTEIL	633
71.352.1635.1	GEHAEUSEOBERTEIL	633
71.352.1635.2	GEHAEUSEOBERTEIL	633
71.352.1635.3	GEHAEUSEOBERTEIL	633
71.352.2435.0	GEHAEUSEOBERTEIL	633
71.352.2435.1	GEHAEUSEOBERTEIL	633
71.352.2435.2	GEHAEUSEOBERTEIL	633
71.352.2435.3	GEHAEUSEOBERTEIL	633
71.353.1035.0	GEHAEUSEOBERTEIL	633
71.353.1035.1	GEHAEUSEOBERTEIL	633
71.353.1035.2	GEHAEUSEOBERTEIL	633
71.353.1035.3	GEHAEUSEOBERTEIL	633
71.353.1635.0	GEHAEUSEOBERTEIL	633
71.353.1635.1	GEHAEUSEOBERTEIL	633
71.353.1635.2	GEHAEUSEOBERTEIL	633
71.353.1635.3	GEHAEUSEOBERTEIL	633
71.353.2435.0	GEHAEUSEOBERTEIL	633
71.353.2435.1	GEHAEUSEOBERTEIL	633
71.353.2435.2	GEHAEUSEOBERTEIL	633
71.353.2435.3	GEHAEUSEOBERTEIL	633
71.354.1035.0	GEHAEUSEOBERTEIL	633
71.354.1035.1	GEHAEUSEOBERTEIL	633
71.354.1035.2	GEHAEUSEOBERTEIL	633
71.354.1035.3	GEHAEUSEOBERTEIL	633
71.354.1635.0	GEHAEUSEOBERTEIL	633
71.354.1635.1	GEHAEUSEOBERTEIL	633
71.354.1635.2	GEHAEUSEOBERTEIL	633
71.354.1635.3	GEHAEUSEOBERTEIL	633
71.354.2435.0	GEHAEUSEOBERTEIL	633
71.354.2435.1	GEHAEUSEOBERTEIL	633
71.354.2435.2	GEHAEUSEOBERTEIL	633
71.354.2435.3	GEHAEUSEOBERTEIL	633
71.372.1035.0	GEHAEUSEOBERTEIL	735
71.372.1035.3		735
71.372.1635.0	GEHAEUSEOBERTEIL	735

contents of part number

contents PART NUMBER

Part no.	Type	section / page
71.372.1635.3		735
71.374.2435.0		735
71.374.2435.3		735
71.940.1053.3	ADA.I.GEH.BU.10WL	667
71.940.1053.4	ADA.I.GEH.BU.10WL	667
71.940.1653.3	ADA.I.GEH.BU.16WL	667
71.940.1653.4	ADA.I.GEH.BU.16WL	667
71.940.2453.3	ADA.I.GEH.BU.24WL	667
71.940.2453.4	ADA.I.GEH.BU.24WL	667
71.945.1053.3	ADA.I.GEH.BU.10WR	667
71.945.1053.4	ADA.I.GEH.BU.10WR	667
71.945.1653.3	ADA.I.GEH.BU.16WR	667
71.945.1653.4	ADA.I.GEH.BU.16WR	667
71.945.2453.3	ADA.I.GEH.BU.24WR	667
71.945.2453.4	ADA.I.GEH.BU.24WR	667
71.950.1053.3	ADA.I.GEH.ST.10WL	667
71.950.1053.4	ADA.I.GEH.ST.10WL	667
71.950.1653.3	ADA.I.GEH.ST.16WL	667
71.950.1653.4	ADA.I.GEH.ST.16WL	667
71.950.2453.3	ADA.I.GEH.ST.24WL	667
71.950.2453.4	ADA.I.GEH.ST.24WL	667
71.955.1053.3	ADA.I.GEH.ST.10WR	667
71.955.1053.4	ADA.I.GEH.ST.10WR	667
71.955.1653.3	ADA.I.GEH.ST.16WR	667
71.955.1653.4	ADA.I.GEH.ST.16WR	667
71.955.2453.3	ADA.I.GEH.ST.24WR	667
71.955.2453.4	ADA.I.GEH.ST.24WR	667
71.960.0353.3	ADA.I.GEH.BU. 3WL	671
71.960.0353.4	ADA.I.GEH.BU. 3WL	671
71.960.0653.3	ADA.I.GEH.BU. 6WL	671
71.960.0653.4	ADA.I.GEH.BU. 6WL	671
71.960.1053.3	ADA.I.GEH.BU.10WL	671
71.960.1053.4	ADA.I.GEH.BU.10WL	671
71.965.0353.3	ADA.I.GEH.BU. 3WR	671
71.965.0353.4	ADA.I.GEH.BU. 3WR	671
71.965.0653.3		671
71.965.0653.4	ADA.I.GEH.BU. 6WR	671
71.965.1053.3		671
71.965.1053.4	ADA.I.GEH.BU.10WR	671
71.970.0353.3		671
71.970.0353.4	ADA.I.GEH.ST. 3WL	671
71.970.0653.3	ADA.I.GEH.ST. 6WL	671
71.970.0653.4	ADA.I.GEH.ST. 6WL	671
71.970.1053.3	ADA.I.GEH.ST.10WL	671
71.970.1053.4	ADA.I.GEH.ST.10WL	671
71.975.0353.3		671
71.975.0353.4	ADA.I.GEH.ST. 3WR	671
71.975.0653.3	ADA.I.GEH.ST. 6WR	671
71.975.0653.4	ADA.I.GEH.ST. 6WR	671
71.975.1053.3	ADA.I.GEH.ST.10WR	671
71.975.1053.4	ADA.I.GEH.ST.10WR	671
72.000.0653.0	KL.ADA. BU. 6WL	693
72.005.0653.0	KL.ADA. BU. 6WR	693
72.010.0653.0	KL.ADA. ST. 6WL	693
72.015.0653.0	KL.ADA. ST. 6WR	693
72.100.0653.0	KL.ADA. BU. 6WL	655
72.100.0653.4	KL.ADA. BU. 6WL	655
72.100.1053.0	KL.ADA. BU.10WL	655
72.100.1053.4	KL.ADA. BU.10WL	655
72.100.1653.0	KL.ADA. BU.16WL	655
72.100.1653.4	KL.ADA. BU.16WL	655
72.100.2453.0	KL.ADA. BU.24WL	655
72.100.2453.4	KL.ADA. BU.24WL	655
72.101.0653.0	KL.ADAP.BUF 6P WL	655
72.101.1053.0	KL.ADAP.BUF10P WL	655
72.101.1653.0	KL.ADAP.BUF16P WL	655
72.101.2453.0	KL.ADAP.BUF24P WL	655
72.105.0653.0	KL.ADA. BU. 6WR	655
72.105.0653.4	KL.ADA. BU. 6WR	655
72.105.1053.0	KL.ADA. BU.10WR	655
72.105.1053.4	KL.ADA. BU.10WR	655
72.105.1653.0	KL.ADA. BU.16WR	655
72.105.1653.4	KL.ADA. BU.16WR	655
72.105.2453.0	KL.ADA. BU.24WR	655
72.105.2453.4	KL.ADA. BU.24WR	655
72.106.0653.0	KL.ADAP.BUF 6P WR	655
72.106.1053.0	KL.ADAP.BUF10P WR	655
72.106.1653.0	KL.ADAP.BUF16P WR	655
72.106.2453.0	KL.ADAP.BUF24P WR	655
72.107.1053.0	KL.ADA. BU.4/6WR	699
72.110.0653.0	KL.ADA. ST. 6WL	655
72.110.0653.4	KL.ADA. ST. 6WL	655
72.110.1053.0	KL.ADA. ST.10WL	655
72.110.1053.4	KL.ADA. ST.10WL	655
72.110.1653.0	KL.ADA. ST.16WL	655
72.110.1653.4	KL.ADA. ST.16WL	655
72.110.2453.0	KL.ADA. ST.24WL	655
72.110.2453.4	KL.ADA. ST.24WL	655
72.111.0653.0	KL.ADAP.STF 6P WL	655
72.111.1053.0	KL.ADAP.STF10P WL	655
72.111.1653.0	KL.ADAP.STF16P WL	655
72.111.2453.0	KL.ADAP.STF24P WL	655
72.115.0653.0	KL.ADA. ST. 6WR	655
72.115.0653.4	KL.ADA. ST. 6WR	655
72.115.1053.0	KL.ADA. ST.10WR	655
72.115.1053.4	KL.ADA. ST.10WR	655
72.115.1653.0	KL.ADA. ST.16WR	655
72.115.1653.4	KL.ADA. ST.16WR	655
72.115.2453.0	KL.ADA. ST.24WR	655
72.115.2453.4	KL.ADA. ST.24WR	655
72.116.0653.0	KL.ADAP.STF 6P WR	655
72.116.1053.0	KL.ADAP.STF10P WR	655
72.116.1653.0	KL.ADAP.STF16P WR	655
72.116.2453.0	KL.ADAP.STF24P WR	655
72.117.1053.0	KL.ADA. ST.4/6WR	699
72.200.0653.0	BUCHSENEINSATZ	693
72.203.1253.0	BU.EINSATZ 3/3/6	705
72.205.0653.0	BUCHSENEINSATZ	707
72.205.1053.0	BU.EINSATZ 4/6	699
72.205.1253.0	BU.EINSATZ 6/6	703
72.210.0653.0	STECKEREINSATZ	693
72.213.1253.0	ST.EINSATZ 3/3/6	705
72.215.0653.0	STECKEREINSATZ	707
72.215.1053.0	ST.EINSATZ 4/6	699
72.215.1253.0	ST.EINSATZ 6/6	703
72.250.1635.2	GEHAEUSEOBERTEIL	703
72.250.2435.2	GEHAEUSEOBERTEIL	705
72.300.0653.0	BUCHSENEINSATZ	655
72.300.0653.9	BU.EIG.ANL.	767
72.300.1053.0	BUCHSENEINSATZ	655
72.300.1053.9	BU.EIG.ANL.	767
72.300.1653.0	BUCHSENEINSATZ	655
72.300.1653.9	BU.EIG.ANL.	767
72.300.2453.0	BUCHSENEINSATZ	655
72.300.2453.9	BU.EIG.ANL.	767
72.300.3253.0	BUCHSENEINSATZ	655
72.300.4853.0	BUCHSENEINSATZ	655
72.300.4853.9	BU.EIG.ANL.	767
72.310.0653.0	STECKEREINSATZ	655
72.310.0653.9	ST.EIG.ANL.	767
72.310.1053.0	STECKEREINSATZ	655
72.310.1053.9	ST.EIG.ANL.	767
72.310.1653.0	STECKEREINSATZ	655
72.310.1653.9	ST.EIG.ANL.	767
72.310.2453.0	STECKEREINSATZ	655
72.310.2453.9	ST.EIG.ANL.	767
72.310.3253.0	STECKEREINSATZ	655
72.310.4853.0	STECKEREINSATZ	655
72.310.4853.9	ST.EIG.ANL.	767
72.320.0628.0	GEHAEUSEUNTERTEIL	658
72.320.1028.0	GEHAEUSEUNTERTEIL	650
72.320.1628.0	GEHAEUSEUNTERTEIL	650
72.320.2428.0	GEHAEUSEUNTERTEIL	650
72.325.0628.0	GEHAEUSEUNTERTEIL	659
72.325.1028.0	GEHAEUSEUNTERTEIL	651
72.325.1628.0	GEHAEUSEUNTERTEIL	651
72.325.2428.0	GEHAEUSEUNTERTEIL	651
72.330.0635.0	GEHAEUSEUNTERTEIL	658
72.330.0635.1	GEHAEUSEUNTERTEIL	658
72.330.1035.0	GEHAEUSEUNTERTEIL	650
72.330.1035.1	GEHAEUSEUNTERTEIL	650
72.330.1635.0	GEHAEUSEUNTERTEIL	650
72.330.1635.1	GEHAEUSEUNTERTEIL	650
72.330.2435.0	GEHAEUSEUNTERTEIL	650
72.330.2435.1	GEHAEUSEUNTERTEIL	650
72.331.0635.0	GEHAEUSEUNTERTEIL	658
72.331.0635.1	GEHAEUSEUNTERTEIL	658
72.331.1035.0	GEHAEUSEUNTERTEIL	650
72.331.1035.1	GEHAEUSEUNTERTEIL	650
72.331.1635.0	GEHAEUSEUNTERTEIL	650
72.331.1635.1	GEHAEUSEUNTERTEIL	650
72.331.2435.0	GEHAEUSEUNTERTEIL	650
72.331.2435.1	GEHAEUSEUNTERTEIL	650
72.333.0635.0	GEHAEUSEUNTERTEIL	659
72.333.0635.1	GEHAEUSEUNTERTEIL	659
72.333.1035.0	GEHAEUSEUNTERTEIL	651
72.333.1035.1	GEHAEUSEUNTERTEIL	651
72.333.1635.0	GEHAEUSEUNTERTEIL	651
72.333.1635.1	GEHAEUSEUNTERTEIL	651
72.333.2435.0	GEHAEUSEUNTERTEIL	651
72.333.2435.1	GEHAEUSEUNTERTEIL	651
72.340.0635.0	GEHAEUSEUNTERTEIL	659
72.340.0635.1	GEHAEUSEUNTERTEIL	659
72.340.1035.0	GEHAEUSEUNTERTEIL	651
72.340.1035.1	GEHAEUSEUNTERTEIL	651
72.340.1635.0	GEHAEUSEUNTERTEIL	651
72.340.1635.1	GEHAEUSEUNTERTEIL	651
72.340.2435.0	GEHAEUSEUNTERTEIL	651
72.340.2435.1	GEHAEUSEUNTERTEIL	651
72.341.0635.0	GEHAEUSEUNTERTEIL	659
72.341.0635.1	GEHAEUSEUNTERTEIL	659
72.341.1035.0	GEHAEUSEUNTERTEIL	651
72.341.1035.1	GEHAEUSEUNTERTEIL	651
72.341.1635.0	GEHAEUSEUNTERTEIL	651
72.341.1635.1	GEHAEUSEUNTERTEIL	651
72.341.2435.0	GEHAEUSEUNTERTEIL	651
72.341.2435.1	GEHAEUSEUNTERTEIL	651
72.342.0635.0	GEHAEUSEUNTERTEIL	659
72.342.0635.1	GEHAEUSEUNTERTEIL	659
72.342.1035.0	GEHAEUSEUNTERTEIL	651
72.342.1035.1	GEHAEUSEUNTERTEIL	651
72.342.1635.0	GEHAEUSEUNTERTEIL	651
72.342.1635.1	GEHAEUSEUNTERTEIL	651
72.342.2435.0	GEHAEUSEUNTERTEIL	651
72.342.2435.1	GEHAEUSEUNTERTEIL	651
72.343.0635.0	GEHAEUSEUNTERTEIL	659
72.343.0635.1	GEHAEUSEUNTERTEIL	659
72.343.1035.0	GEHAEUSEUNTERTEIL	651
72.343.1035.1	GEHAEUSEUNTERTEIL	651
72.343.1635.0	GEHAEUSEUNTERTEIL	651
72.343.1635.1	GEHAEUSEUNTERTEIL	651
72.343.2435.0	GEHAEUSEUNTERTEIL	651
72.343.2435.1	GEHAEUSEUNTERTEIL	651
72.350.0635.0	GEHAEUSEOBERTEIL	657
72.350.0635.1	GEHAEUSEOBERTEIL	657
72.350.0635.2	GEHAEUSEOBERTEIL	657
72.350.0635.3	GEHAEUSEOBERTEIL	657
72.350.1035.0	GEHAEUSEOBERTEIL	649
72.350.1035.1	GEHAEUSEOBERTEIL	649
72.350.1035.2	GEHAEUSEOBERTEIL	649
72.350.1035.3	GEHAEUSEOBERTEIL	649
72.350.1635.0	GEHAEUSEOBERTEIL	649
72.350.1635.1	GEHAEUSEOBERTEIL	649
72.350.1635.2	GEHAEUSEOBERTEIL	649
72.350.1635.3	GEHAEUSEOBERTEIL	649
72.350.2435.0	GEHAEUSEOBERTEIL	649
72.350.2435.1	GEHAEUSEOBERTEIL	649
72.350.2435.2	GEHAEUSEOBERTEIL	649
72.350.2435.3	GEHAEUSEOBERTEIL	649
72.351.0635.0	GEHAEUSEOBERTEIL	657
72.351.0635.1	GEHAEUSEOBERTEIL	657
72.351.0635.2	GEHAEUSEOBERTEIL	657
72.351.0635.3	GEHAEUSEOBERTEIL	657
72.351.1035.0	GEHAEUSEOBERTEIL	649
72.351.1035.1	GEHAEUSEOBERTEIL	649
72.351.1035.2	GEHAEUSEOBERTEIL	649
72.351.1035.3	GEHAEUSEOBERTEIL	649
72.351.1635.0	GEHAEUSEOBERTEIL	649
72.351.1635.1	GEHAEUSEOBERTEIL	649
72.351.1635.2	GEHAEUSEOBERTEIL	649
72.351.1635.3	GEHAEUSEOBERTEIL	649
72.351.2435.0	GEHAEUSEOBERTEIL	649
72.351.2435.1	GEHAEUSEOBERTEIL	649
72.351.2435.2	GEHAEUSEOBERTEIL	649
72.351.2435.3	GEHAEUSEOBERTEIL	649
72.352.0635.0	GEHAEUSEOBERTEIL	657
72.352.0635.1	GEHAEUSEOBERTEIL	657
72.352.0635.2	GEHAEUSEOBERTEIL	657
72.352.0635.3	GEHAEUSEOBERTEIL	657
72.352.1035.0	GEHAEUSEOBERTEIL	649
72.352.1035.1	GEHAEUSEOBERTEIL	649
72.352.1035.2	GEHAEUSEOBERTEIL	649
72.352.1035.3	GEHAEUSEOBERTEIL	649
72.352.1635.0	GEHAEUSEOBERTEIL	649
72.352.1635.1	GEHAEUSEOBERTEIL	649
72.352.1635.2	GEHAEUSEOBERTEIL	649
72.352.1635.3	GEHAEUSEOBERTEIL	649
72.352.2435.0	GEHAEUSEOBERTEIL	649
72.352.2435.1	GEHAEUSEOBERTEIL	649
72.352.2435.2	GEHAEUSEOBERTEIL	649
72.352.2435.3	GEHAEUSEOBERTEIL	649
72.353.0635.0		657
72.353.0635.1		657
72.353.0635.2		657
72.353.0635.3		657
72.353.1035.0		649
72.353.1035.1		649
72.353.1035.2		649
72.353.1035.3		649
72.353.1635.0		649
72.353.1635.1		649
72.353.1635.2		649
72.353.1635.3		649
72.353.2435.0	GEHAEUSEOBERTEIL	649
72.353.2435.1		649
72.353.2435.2		649
72.353.2435.3		649
72.354.0635.0		657
72.354.0635.1		657
72.354.0635.2		657
72.354.0635.3		657
72.354.1035.0		649
72.354.1035.1		649
72.354.1035.2		649
72.354.1035.3		649
72.354.1635.0		649
72.354.1635.1		649
72.354.1635.2		649
72.354.1635.3		649
72.354.2435.0	GEHAEUSEOBERTEIL	649
72.354.2435.1		649
72.354.2435.2		649
72.354.2435.3		649
72.355.1035.0	GEHAEUSEOBERTEIL	649
72.355.1035.1	GEHAEUSEOBERTEIL	649

contents

Part no.	Type	section / page
72.355.1035.2	GEHAEUSEOBERTEIL	649
72.355.1035.3	GEHAEUSEOBERTEIL	649
72.355.1635.0	GEHAEUSEOBERTEIL	649
72.355.1635.1	GEHAEUSEOBERTEIL	649
72.355.1635.2	GEHAEUSEOBERTEIL	649
72.355.1635.3	GEHAEUSEOBERTEIL	649
72.355.2435.0	GEHAEUSEOBERTEIL	649
72.355.2435.1	GEHAEUSEOBERTEIL	649
72.355.2435.2	GEHAEUSEOBERTEIL	649
72.355.2435.3	GEHAEUSEOBERTEIL	649
72.356.1035.0	GEHAEUSEOBERTEIL	649
72.356.1035.1	GEHAEUSEOBERTEIL	649
72.356.1035.2	GEHAEUSEOBERTEIL	649
72.356.1035.3	GEHAEUSEOBERTEIL	649
72.356.1635.0	GEHAEUSEOBERTEIL	649
72.356.1635.1	GEHAEUSEOBERTEIL	649
72.356.1635.2	GEHAEUSEOBERTEIL	649
72.356.1635.3	GEHAEUSEOBERTEIL	649
72.356.2435.0	GEHAEUSEOBERTEIL	649
72.356.2435.1	GEHAEUSEOBERTEIL	649
72.356.2435.2	GEHAEUSEOBERTEIL	649
72.356.2435.3	GEHAEUSEOBERTEIL	649
72.357.1035.0	GEHAEUSEOBERTEIL	649
72.357.1035.1	GEHAEUSEOBERTEIL	649
72.357.1035.2	GEHAEUSEOBERTEIL	649
72.357.1035.3	GEHAEUSEOBERTEIL	649
72.357.1635.0	GEHAEUSEOBERTEIL	649
72.357.1635.1	GEHAEUSEOBERTEIL	649
72.357.1635.2	GEHAEUSEOBERTEIL	649
72.357.1635.3	GEHAEUSEOBERTEIL	649
72.357.2435.0	GEHAEUSEOBERTEIL	649
72.357.2435.1	GEHAEUSEOBERTEIL	649
72.357.2435.2	GEHAEUSEOBERTEIL	649
72.357.2435.3	GEHAEUSEOBERTEIL	649
72.358.1035.0		649
72.358.1035.1		649
72.358.1035.2		649
72.358.1035.3		649
72.358.1635.0		649
72.358.1635.1		649
72.358.1635.2		649
72.358.1635.3		649
72.358.2435.0		649
72.358.2435.1		649
72.358.2435.2		649
72.358.2435.3		649
72.359.1035.0		649
72.359.1035.1		649
72.359.1035.2		649
72.359.1035.3		649
72.359.1635.0		649
72.359.1635.1		649
72.359.1635.2		649
72.359.1635.3		649
72.359.2435.0	GEHAEUSEOBERTEIL	649
72.359.2435.1		649
72.359.2435.2		649
72.359.2435.3		649
72.372.1035.0	GEHAEUSEOBERTEIL	733
72.372.1035.3	GEHAEUSEOBERTEIL	733
72.372.1635.0	GEHAEUSEOBERTEIL	733
72.372.1635.3	GEHAEUSEOBERTEIL	733
72.372.2435.0	GEHAEUSEOBERTEIL	733
72.372.2435.3	GEHAEUSEOBERTEIL	733
72.374.2435.0		733
72.374.2435.3	GEHAEUSEOBERTEIL	733
72.700.0658.0	BUCHSENEINSATZ	655
72.700.1058.0	BUCHSENEINSATZ	655
72.700.1658.0	BUCHSENEINSATZ	655
72.700.2458.0	BUCHSENEINSATZ	655
72.700.3258.0	BUCHSENEINSATZ	655
72.700.4858.0	BUCHSENEINSATZ	655
72.710.0658.0	STECKEREINSATZ	655
72.710.1058.0	STECKEREINSATZ	655
72.710.1658.0	STECKEREINSATZ	655
72.710.2458.0	STECKEREINSATZ	655
72.710.3258.0	STECKEREINSATZ	655
72.710.4858.0	STECKEREINSATZ	655
72.940.0653.0	ADA.I.GEH.BU. 6WL	669
72.940.0653.4		669
72.940.1053.0	ADA.I.GEH.BU.10WL	669
72.940.1053.4		669
72.940.1653.0	ADA.I.GEH.BU.16WL	669
72.940.1653.4		669
72.940.2453.0	ADA.I.GEH.BU.24WL	669
72.940.2453.4		669
72.945.0653.0	ADA.I.GEH.BU. 6WR	669
72.945.0653.4		669
72.945.1053.0	ADA.I.GEH.BU.10WR	669
72.945.1053.4		669
72.945.1653.0	ADA.I.GEH.BU.16WR	669
72.945.1653.4		669
72.945.2453.0	ADA.I.GEH.BU.24WR	669
72.945.2453.4		669
72.950.0653.0	ADA.I.GEH.ST. 6WL	669
72.950.0653.4		669
72.950.1053.0	ADA.I.GEH.ST.10WL	669
72.950.1053.4		669
72.950.1653.0	ADA.I.GEH.ST.16WL	669
72.950.1653.4		669
72.950.2453.0	ADA.I.GEH.ST.24WL	669
72.950.2453.4		669
72.955.0653.0	ADA.I.GEH.ST. 6WR	669
72.955.0653.4		669
72.955.1053.0	ADA.I.GEH.ST.10WR	669
72.955.1053.4		669
72.955.1653.0	ADA.I.GEH.ST.16WR	669
72.955.1653.4	ADA.I.GEH.ST.16WR	669
72.955.2453.0	ADA.I.GEH.ST.24WR	669
72.955.2453.4		669
73.100.4053.0	KL.ADA. BU.40WL	719
73.100.6453.0	KL.ADA. BU.64WL	719
73.105.4053.0	KL.ADA. BU.40WR	719
73.105.6453.0	KL.ADA. BU.64WR	719
73.110.4053.0	KL.ADA. ST.40WL	719
73.110.6453.0	KL.ADA. ST.64WL	719
73.115.4053.0	KL.ADA. ST.40WR	719
73.115.6453.0	KL.ADA. ST.64WR	719
73.300.0353.0	BUCHSENEINSATZ	713
73.300.0453.0	BUCHSENEINSATZ	713
73.310.0353.0	STECKEREINSATZ	713
73.310.0453.0	STECKEREINSATZ	713
73.326.4028.0	GEHAEUSEUNTERTEIL	729
73.326.6428.0	GEHAEUSEUNTERTEIL	729
73.327.4028.0	GEHAEUSEUNTERTEIL	731
73.327.6428.0	GEHAEUSEUNTERTEIL	731
73.330.4035.0	GEHAEUSEUNTERTEIL	729
73.330.4035.1	GEHAEUSEUNTERTEIL	729
73.330.6435.0	GEHAEUSEUNTERTEIL	729
73.330.6435.1	GEHAEUSEUNTERTEIL	729
73.331.4035.0	GEHAEUSEUNTERTEIL	729
73.331.4035.1	GEHAEUSEUNTERTEIL	729
73.331.6435.0	GEHAEUSEUNTERTEIL	729
73.331.6435.1	GEHAEUSEUNTERTEIL	729
73.333.4035.0	GEHAEUSEUNTERTEIL	729
73.333.4035.1	GEHAEUSEUNTERTEIL	729
73.333.6435.0	GEHAEUSEUNTERTEIL	729
73.333.6435.1	GEHAEUSEUNTERTEIL	729
73.334.4035.0	GEHAEUSEUNTERTEIL	638
73.334.4035.1	GEHAEUSEUNTERTEIL	638
73.334.6435.0	GEHAEUSEUNTERTEIL	638
73.334.6435.1	GEHAEUSEUNTERTEIL	638
73.335.4035.0	GEHAEUSEUNTERTEIL	638
73.335.4035.1	GEHAEUSEUNTERTEIL	638
73.335.6435.0	GEHAEUSEUNTERTEIL	638
73.335.6435.1	GEHAEUSEUNTERTEIL	638
73.337.4035.0	GEHAEUSEUNTERTEIL	639
73.337.4035.1	GEHAEUSEUNTERTEIL	639
73.337.6435.0	GEHAEUSEUNTERTEIL	639
73.337.6435.1	GEHAEUSEUNTERTEIL	639
73.340.4035.0	GEHAEUSEUNTERTEIL	731
73.340.4035.1	GEHAEUSEUNTERTEIL	731
73.340.6435.0	GEHAEUSEUNTERTEIL	731
73.340.6435.1	GEHAEUSEUNTERTEIL	731
73.341.4035.0	GEHAEUSEUNTERTEIL	731
73.341.4035.1	GEHAEUSEUNTERTEIL	731
73.341.6435.0	GEHAEUSEUNTERTEIL	731
73.341.6435.1	GEHAEUSEUNTERTEIL	731
73.342.4035.0	GEHAEUSEUNTERTEIL	731
73.342.4035.1	GEHAEUSEUNTERTEIL	731
73.342.6435.0	GEHAEUSEUNTERTEIL	731
73.342.6435.1	GEHAEUSEUNTERTEIL	731
73.343.4035.0	GEHAEUSEUNTERTEIL	731
73.343.4035.1	GEHAEUSEUNTERTEIL	731
73.343.6435.0	GEHAEUSEUNTERTEIL	731
73.343.6435.1	GEHAEUSEUNTERTEIL	731
73.344.4035.0	GEHAEUSEUNTERTEIL	639
73.344.4035.1	GEHAEUSEUNTERTEIL	639
73.344.6435.0	GEHAEUSEUNTERTEIL	639
73.344.6435.1	GEHAEUSEUNTERTEIL	639
73.345.4035.0	GEHAEUSEUNTERTEIL	639
73.345.4035.1	GEHAEUSEUNTERTEIL	639
73.345.6435.0	GEHAEUSEUNTERTEIL	639
73.345.6435.1	GEHAEUSEUNTERTEIL	639
73.346.4035.0	GEHAEUSEUNTERTEIL	639
73.346.4035.1	GEHAEUSEUNTERTEIL	639
73.346.6435.0	GEHAEUSEUNTERTEIL	639
73.346.6435.1	GEHAEUSEUNTERTEIL	639
73.347.4035.0	GEHAEUSEUNTERTEIL	639
73.347.4035.1	GEHAEUSEUNTERTEIL	639
73.347.6435.0	GEHAEUSEUNTERTEIL	639
73.347.6435.1	GEHAEUSEUNTERTEIL	639
73.350.4035.0	GEHAEUSEOBERTEIL	727
73.350.4035.1	GEHAEUSEOBERTEIL	727
73.350.4035.2	GEHAEUSEOBERTEIL	727
73.350.4035.3	GEHAEUSEOBERTEIL	727
73.350.6435.0	GEHAEUSEOBERTEIL	727
73.350.6435.1	GEHAEUSEOBERTEIL	727
73.350.6435.2	GEHAEUSEOBERTEIL	727
73.350.6435.3	GEHAEUSEOBERTEIL	727
73.352.4035.0	GEHAEUSEOBERTEIL	709
73.352.4035.1	GEHAEUSEOBERTEIL	709
73.352.4035.2	GEHAEUSEOBERTEIL	709
73.352.4035.3	GEHAEUSEOBERTEIL	709
73.352.6435.0	GEHAEUSEOBERTEIL	727
73.352.6435.1	GEHAEUSEOBERTEIL	727
73.352.6435.2	GEHAEUSEOBERTEIL	727
73.352.6435.3	GEHAEUSEOBERTEIL	727
73.353.0645.1		684
73.353.1035.0	GEHAEUSEOBERTEIL	749
73.353.1035.1	GEHAEUSEOBERTEIL	749
73.353.1035.2	GEHAEUSEOBERTEIL	749
73.353.1035.3		749
73.353.1045.1		684
73.353.4035.0	GEHAEUSEOBERTEIL	709
73.353.4035.1	GEHAEUSEOBERTEIL	709
73.353.4035.2	GEHAEUSEOBERTEIL	709
73.353.4035.3	GEHAEUSEOBERTEIL	709
73.353.4045.1		684
73.353.6435.0	GEHAEUSEOBERTEIL	727
73.353.6435.1	GEHAEUSEOBERTEIL	727
73.353.6435.2	GEHAEUSEOBERTEIL	727
73.353.6435.3	GEHAEUSEOBERTEIL	727
73.353.6445.1		684
73.354.1035.0	GEHAEUSEOBERTEIL	749
73.354.1035.1	GEHAEUSEOBERTEIL	749
73.354.1035.2	GEHAEUSEOBERTEIL	749
73.354.1035.3		749
73.354.4035.0	GEHAEUSEOBERTEIL	727
73.354.4035.1		727
73.354.4035.2		727
73.354.4035.3		727
73.354.6435.0	GEHAEUSEOBERTEIL	727
73.354.6435.1		727
73.354.6435.2		727
73.354.6435.3		727
73.355.4035.0	GEHAEUSEOBERTEIL	727
73.355.4035.1	GEHAEUSEOBERTEIL	727
73.355.4035.2	GEHAEUSEOBERTEIL	727
73.355.4035.3	GEHAEUSEOBERTEIL	727
73.355.6435.0	GEHAEUSEOBERTEIL	727
73.355.6435.1	GEHAEUSEOBERTEIL	727
73.355.6435.2	GEHAEUSEOBERTEIL	727
73.355.6435.3	GEHAEUSEOBERTEIL	727
73.357.4035.0	GEHAEUSEOBERTEIL	709
73.357.4035.1	GEHAEUSEOBERTEIL	709
73.357.4035.2	GEHAEUSEOBERTEIL	709
73.357.4035.3	GEHAEUSEOBERTEIL	709
73.357.6435.0	GEHAEUSEOBERTEIL	727
73.357.6435.1	GEHAEUSEOBERTEIL	727
73.357.6435.2	GEHAEUSEOBERTEIL	727
73.357.6435.3	GEHAEUSEOBERTEIL	727
73.358.4035.0	GEHAEUSEOBERTEIL	709
73.358.4035.1	GEHAEUSEOBERTEIL	709
73.358.4035.2	GEHAEUSEOBERTEIL	709
73.358.4035.3	GEHAEUSEOBERTEIL	709
73.358.6435.0	GEHAEUSEOBERTEIL	727
73.358.6435.1	GEHAEUSEOBERTEIL	727
73.358.6435.2	GEHAEUSEOBERTEIL	727
73.358.6435.3	GEHAEUSEOBERTEIL	727
73.359.4035.0	GEHAEUSEOBERTEIL	727
73.359.4035.1		727
73.359.4035.2		727
73.359.4035.3		727
73.359.6435.0	GEHAEUSEOBERTEIL	727
73.359.6435.1		727
73.359.6435.2		727
73.359.6435.3		749
73.700.0753.0	BUCHSENEINSATZ	713
73.700.0853.0	BUCHSENEINSATZ	713
73.700.1553.0	BUCHSENEINSATZ	719
73.700.2553.0	BUCHSENEINSATZ	719
73.700.4058.0	BUCHSENEINSATZ	719
73.700.6458.0	BUCHSENEINSATZ	719
73.710.0753.0	STECKEREINSATZ	713
73.710.0853.0	STECKEREINSATZ	713
73.710.1553.0	STECKEREINSATZ	719
73.710.2553.0	STECKEREINSATZ	719
73.710.4058.0	STECKEREINSATZ	719
73.710.6458.0	STECKEREINSATZ	719
75.012.0053.0	BUCHSENTEIL	758
75.012.5053.0	STECKERTEIL	758
75.013.0051.0	OBERTEIL	758
75.013.0051.2	OBERTEIL	758
75.013.5051.0	UNTERTEIL	758
75.900.0035.0	GEH.UT. TEIL F	664
75.900.0135.0	GEH.OT. TEIL L	664
75.931.1635.0	GEH.UT. TEIL F	664
75.931.2435.0	GEH.UT. TEIL F	664
75.933.1635.0	GEH.UT. TEIL F	664
75.933.2435.0	GEH.UT. TEIL F	664
75.934.2435.0	GEH.UT. TEIL F	664
75.941.1635.0	GEH.UT. TEIL F	664
75.941.2435.0	GEH.UT. TEIL F	664
75.950.1635.0	GEH.OT. TEIL L	664

contents of part number

contents PART NUMBER

Part no.	Type	section / page
75.950.2435.0	GEH.OT. TEIL L	664
75.960.1635.0	GEH.OT. TEIL L	664
75.960.2435.0	GEH.OT. TEIL L	664
76.320.0729.0	GEHAEUSEUNTERTEIL	713
76.320.0753.0	GEHAEUSEUNTERTEIL	713
76.320.1528.0	GEHAEUSEUNTERTEIL	723
76.320.2528.0	GEHAEUSEUNTERTEIL	723
76.321.0729.0	GEHAEUSEUNTERTEIL	713
76.321.0753.0	GEHAEUSEUNTERTEIL	713
76.322.0736.0	GEHAEUSEUNTERTEIL	713
76.322.0736.1	GEHAEUSEUNTERTEIL	713
76.322.0760.1	GEHAEUSEUNTERTEIL	713
76.325.1528.0	GEHAEUSEUNTERTEIL	725
76.325.2528.0	GEHAEUSEUNTERTEIL	725
76.326.4028.0	GEHAEUSEUNTERTEIL	723
76.326.6428.0	GEHAEUSEUNTERTEIL	723
76.327.4028.0	GEHAEUSEUNTERTEIL	725
76.327.6428.0	GEHAEUSEUNTERTEIL	725
76.330.1535.0	GEHAEUSEUNTERTEIL	723
76.330.1535.1	GEHAEUSEUNTERTEIL	723
76.330.2535.0	GEHAEUSEUNTERTEIL	723
76.330.2535.1	GEHAEUSEUNTERTEIL	723
76.330.4035.0	GEHAEUSEUNTERTEIL	723
76.330.4035.1	GEHAEUSEUNTERTEIL	723
76.330.6435.0	GEHAEUSEUNTERTEIL	723
76.330.6435.1	GEHAEUSEUNTERTEIL	723
76.331.1535.0	GEHAEUSEUNTERTEIL	723
76.331.1535.1	GEHAEUSEUNTERTEIL	723
76.331.2535.0	GEHAEUSEUNTERTEIL	723
76.331.2535.1	GEHAEUSEUNTERTEIL	723
76.331.4035.0	GEHAEUSEUNTERTEIL	723
76.331.4035.1	GEHAEUSEUNTERTEIL	723
76.331.6435.0	GEHAEUSEUNTERTEIL	723
76.331.6435.1	GEHAEUSEUNTERTEIL	723
76.333.4035.0	GEHAEUSEUNTERTEIL	723
76.333.4035.1	GEHAEUSEUNTERTEIL	723
76.333.6435.0	GEHAEUSEUNTERTEIL	723
76.333.6435.1	GEHAEUSEUNTERTEIL	723
76.334.1535.0	GEHAEUSEUNTERTEIL	723
76.334.1535.1	GEHAEUSEUNTERTEIL	723
76.334.2535.0	GEHAEUSEUNTERTEIL	723
76.334.2535.1	GEHAEUSEUNTERTEIL	723
76.334.4035.0	GEHAEUSEUNTERTEIL	634
76.334.4035.1	GEHAEUSEUNTERTEIL	634
76.334.6435.0	GEHAEUSEUNTERTEIL	634
76.334.6435.1	GEHAEUSEUNTERTEIL	634
76.335.1535.0	GEHAEUSEUNTERTEIL	723
76.335.1535.1	GEHAEUSEUNTERTEIL	723
76.335.2535.0	GEHAEUSEUNTERTEIL	723
76.335.2535.1	GEHAEUSEUNTERTEIL	723
76.335.4035.0	GEHAEUSEUNTERTEIL	634
76.335.4035.1	GEHAEUSEUNTERTEIL	634
76.335.6435.0	GEHAEUSEUNTERTEIL	634
76.335.6435.1	GEHAEUSEUNTERTEIL	634
76.337.4035.0	GEHAEUSEUNTERTEIL	635
76.337.4035.1	GEHAEUSEUNTERTEIL	635
76.337.6435.0	GEHAEUSEUNTERTEIL	635
76.337.6435.1	GEHAEUSEUNTERTEIL	635
76.340.4035.0	GEHAEUSEUNTERTEIL	725
76.340.4035.1		725
76.340.6435.0	GEHAEUSEUNTERTEIL	725
76.340.6435.1		725
76.341.4035.0	GEHAEUSEUNTERTEIL	725
76.341.4035.1		725
76.341.6435.0	GEHAEUSEUNTERTEIL	725
76.341.6435.1		725
76.342.4035.0	GEHAEUSEUNTERTEIL	725
76.342.4035.1		725
76.342.6435.0	GEHAEUSEUNTERTEIL	725
76.342.6435.1		725
76.343.4035.0	GEHAEUSEUNTERTEIL	725
76.343.4035.1		725
76.343.6435.0	GEHAEUSEUNTERTEIL	725
76.343.6435.1		725
76.344.4035.0	GEHAEUSEUNTERTEIL	635
76.344.4035.1	GEHAEUSEUNTERTEIL	635
76.344.6435.0	GEHAEUSEUNTERTEIL	635
76.344.6435.1	GEHAEUSEUNTERTEIL	635
76.345.4035.0	GEHAEUSEUNTERTEIL	635
76.345.4035.1	GEHAEUSEUNTERTEIL	635
76.345.6435.0	GEHAEUSEUNTERTEIL	635
76.345.6435.1	GEHAEUSEUNTERTEIL	635
76.346.4035.0	GEHAEUSEUNTERTEIL	635
76.346.4035.1	GEHAEUSEUNTERTEIL	635
76.346.6435.0	GEHAEUSEUNTERTEIL	635
76.346.6435.1	GEHAEUSEUNTERTEIL	635
76.347.4035.0	GEHAEUSEUNTERTEIL	635
76.347.4035.1	GEHAEUSEUNTERTEIL	635
76.347.6435.0	GEHAEUSEUNTERTEIL	635
76.347.6435.1	GEHAEUSEUNTERTEIL	635
76.350.0736.0	GEHAEUSEOBERTEIL	713
76.350.0736.1	GEHAEUSEOBERTEIL	713
76.350.0760.1	GEHAEUSEOBERTEIL	713
76.350.1535.0	GEHAEUSEOBERTEIL	721
76.350.1535.2	GEHAEUSEOBERTEIL	721
76.350.2535.0	GEHAEUSEOBERTEIL	721
76.350.2535.2	GEHAEUSEOBERTEIL	721
76.350.4035.0	GEHAEUSEOBERTEIL	721
76.350.4035.1	GEHAEUSEOBERTEIL	721
76.350.4035.2	GEHAEUSEOBERTEIL	721
76.350.4035.3	GEHAEUSEOBERTEIL	721
76.350.6435.0	GEHAEUSEOBERTEIL	721
76.350.6435.1	GEHAEUSEOBERTEIL	721
76.350.6435.2	GEHAEUSEOBERTEIL	721
76.350.6435.3	GEHAEUSEOBERTEIL	721
76.352.0736.0	GEHAEUSEOBERTEIL	713
76.352.0736.1	GEHAEUSEOBERTEIL	713
76.352.0760.1	GEHAEUSEOBERTEIL	713
76.352.1535.0	GEHAEUSEOBERTEIL	721
76.352.1535.1	GEHAEUSEOBERTEIL	721
76.352.1535.2	GEHAEUSEOBERTEIL	721
76.352.2535.0	GEHAEUSEOBERTEIL	721
76.352.2535.1	GEHAEUSEOBERTEIL	721
76.352.2535.2	GEHAEUSEOBERTEIL	721
76.352.4035.0	GEHAEUSEOBERTEIL	697
76.352.4035.1	GEHAEUSEOBERTEIL	697
76.352.4035.2	GEHAEUSEOBERTEIL	697
76.352.4035.3	GEHAEUSEOBERTEIL	697
76.352.6435.0	GEHAEUSEOBERTEIL	721
76.352.6435.1	GEHAEUSEOBERTEIL	721
76.352.6435.2	GEHAEUSEOBERTEIL	721
76.352.6435.3	GEHAEUSEOBERTEIL	721
76.353.1535.0	GEHAEUSEOBERTEIL	721
76.353.1535.2	GEHAEUSEOBERTEIL	721
76.353.2535.0	GEHAEUSEOBERTEIL	721
76.353.2535.2	GEHAEUSEOBERTEIL	721
76.353.4035.0	GEHAEUSEOBERTEIL	697
76.353.4035.1	GEHAEUSEOBERTEIL	697
76.353.4035.2	GEHAEUSEOBERTEIL	697
76.353.4035.3	GEHAEUSEOBERTEIL	697
76.353.6435.0	GEHAEUSEOBERTEIL	721
76.353.6435.1	GEHAEUSEOBERTEIL	721
76.353.6435.2	GEHAEUSEOBERTEIL	721
76.353.6435.3	GEHAEUSEOBERTEIL	721
76.354.1535.0	GEHAEUSEOBERTEIL	721
76.354.1535.1	GEHAEUSEOBERTEIL	721
76.354.1535.2	GEHAEUSEOBERTEIL	721
76.354.2535.0	GEHAEUSEOBERTEIL	721
76.354.2535.1	GEHAEUSEOBERTEIL	721
76.354.2535.2	GEHAEUSEOBERTEIL	721
76.354.4035.0	GEHAEUSEOBERTEIL	707
76.354.4035.1	GEHAEUSEOBERTEIL	707
76.354.4035.2	GEHAEUSEOBERTEIL	707
76.354.4035.3	GEHAEUSEOBERTEIL	707
76.354.6435.0	GEHAEUSEOBERTEIL	721
76.354.6435.1	GEHAEUSEOBERTEIL	721
76.354.6435.2	GEHAEUSEOBERTEIL	721
76.354.6435.3	GEHAEUSEOBERTEIL	721
76.372.0736.0	GEHAEUSEOBERTEIL	713
76.372.0736.1	GEHAEUSEOBERTEIL	713
76.372.0760.1	GEHAEUSEOBERTEIL	713
76.372.1535.0		735
76.372.2535.0		735
77.320.1028.0	GEHAEUSEUNTERTEIL	646
77.320.1628.0	GEHAEUSEUNTERTEIL	646
77.320.2428.0	GEHAEUSEUNTERTEIL	646
77.325.1028.0	GEHAEUSEUNTERTEIL	647
77.325.1628.0	GEHAEUSEUNTERTEIL	647
77.325.2428.0	GEHAEUSEUNTERTEIL	647
77.330.1035.0	GEHAEUSEUNTERTEIL	646
77.330.1035.1	GEHAEUSEUNTERTEIL	646
77.330.1635.0	GEHAEUSEUNTERTEIL	646
77.330.1635.1	GEHAEUSEUNTERTEIL	646
77.330.2435.0	GEHAEUSEUNTERTEIL	646
77.330.2435.1	GEHAEUSEUNTERTEIL	646
77.331.1035.0	GEHAEUSEUNTERTEIL	646
77.331.1035.1	GEHAEUSEUNTERTEIL	646
77.331.1635.0	GEHAEUSEUNTERTEIL	646
77.331.1635.1	GEHAEUSEUNTERTEIL	646
77.331.2435.0	GEHAEUSEUNTERTEIL	646
77.331.2435.1	GEHAEUSEUNTERTEIL	646
77.333.1035.0	GEHAEUSEUNTERTEIL	647
77.333.1035.1	GEHAEUSEUNTERTEIL	647
77.333.1635.0	GEHAEUSEUNTERTEIL	647
77.333.1635.1	GEHAEUSEUNTERTEIL	647
77.333.2435.0	GEHAEUSEUNTERTEIL	647
77.333.2435.1	GEHAEUSEUNTERTEIL	647
77.340.1035.0	GEHAEUSEUNTERTEIL	647
77.340.1035.1	GEHAEUSEUNTERTEIL	647
77.340.1635.0	GEHAEUSEUNTERTEIL	647
77.340.1635.1	GEHAEUSEUNTERTEIL	647
77.340.2435.0	GEHAEUSEUNTERTEIL	647
77.340.2435.1	GEHAEUSEUNTERTEIL	647
77.341.1035.0	GEHAEUSEUNTERTEIL	647
77.341.1035.1	GEHAEUSEUNTERTEIL	647
77.341.1635.0	GEHAEUSEUNTERTEIL	647
77.341.1635.1	GEHAEUSEUNTERTEIL	647
77.341.2435.0	GEHAEUSEUNTERTEIL	647
77.341.2435.1	GEHAEUSEUNTERTEIL	647
77.342.1035.0	GEHAEUSEUNTERTEIL	647
77.342.1035.1	GEHAEUSEUNTERTEIL	647
77.342.1635.0	GEHAEUSEUNTERTEIL	647
77.342.1635.1	GEHAEUSEUNTERTEIL	647
77.342.2435.0	GEHAEUSEUNTERTEIL	647
77.342.2435.1	GEHAEUSEUNTERTEIL	647
77.343.1035.0	GEHAEUSEUNTERTEIL	647
77.343.1035.1	GEHAEUSEUNTERTEIL	647
77.343.1635.0	GEHAEUSEUNTERTEIL	647
77.343.1635.1	GEHAEUSEUNTERTEIL	647
77.343.2435.0	GEHAEUSEUNTERTEIL	647
77.343.2435.1	GEHAEUSEUNTERTEIL	647
77.350.1035.0	GEHAEUSEOBERTEIL	645
77.350.1035.1	GEHAEUSEOBERTEIL	645
77.350.1035.2	GEHAEUSEOBERTEIL	645
77.350.1035.3	GEHAEUSEOBERTEIL	645
77.350.1635.0	GEHAEUSEOBERTEIL	645
77.350.1635.1	GEHAEUSEOBERTEIL	645
77.350.1635.2	GEHAEUSEOBERTEIL	645
77.350.1635.3	GEHAEUSEOBERTEIL	645
77.350.2435.0	GEHAEUSEOBERTEIL	645
77.350.2435.1	GEHAEUSEOBERTEIL	645
77.350.2435.2	GEHAEUSEOBERTEIL	645
77.350.2435.3	GEHAEUSEOBERTEIL	645
77.351.1035.0	GEHAEUSEOBERTEIL	645
77.351.1035.1	GEHAEUSEOBERTEIL	645
77.351.1035.2	GEHAEUSEOBERTEIL	645
77.351.1035.3	GEHAEUSEOBERTEIL	645
77.351.1635.0	GEHAEUSEOBERTEIL	645
77.351.1635.1	GEHAEUSEOBERTEIL	645
77.351.1635.2	GEHAEUSEOBERTEIL	645
77.351.1635.3	GEHAEUSEOBERTEIL	645
77.351.2435.0	GEHAEUSEOBERTEIL	645
77.351.2435.1	GEHAEUSEOBERTEIL	645
77.351.2435.2	GEHAEUSEOBERTEIL	645
77.351.2435.3	GEHAEUSEOBERTEIL	645
77.352.1035.0	GEHAEUSEOBERTEIL	645
77.352.1035.1	GEHAEUSEOBERTEIL	645
77.352.1035.2	GEHAEUSEOBERTEIL	645
77.352.1035.3	GEHAEUSEOBERTEIL	645
77.352.1635.0	GEHAEUSEOBERTEIL	645
77.352.1635.1	GEHAEUSEOBERTEIL	645
77.352.1635.2	GEHAEUSEOBERTEIL	645
77.352.1635.3	GEHAEUSEOBERTEIL	645
77.352.2435.0	GEHAEUSEOBERTEIL	645
77.352.2435.1	GEHAEUSEOBERTEIL	645
77.352.2435.2	GEHAEUSEOBERTEIL	645
77.352.2435.3	GEHAEUSEOBERTEIL	645
77.353.1035.0		645
77.353.1035.1		645
77.353.1035.2		645
77.353.1035.3		645
77.353.1635.0		645
77.353.1635.1		645
77.353.1635.2		645
77.353.1635.3		645
77.353.2435.0		645
77.353.2435.1		645
77.353.2435.2		645
77.353.2435.3		645
77.354.1035.0		645
77.354.1035.1		645
77.354.1035.2		645
77.354.1035.3		645
77.354.1635.0		645
77.354.1635.1		645
77.354.1635.2		645
77.354.1635.3		645
77.354.2435.0	GEHAEUSEOBERTEIL	645
77.354.2435.1		645
77.354.2435.2		645
77.354.2435.3		645
77.372.1035.0	GEHAEUSEOBERTEIL	735
77.372.1035.3		735
77.372.1635.0	GEHAEUSEOBERTEIL	735
77.372.1635.3		735
77.374.2435.0		735
77.374.2435.3	GEHAEUSEOBERTEIL	735
77.940.1053.0	ADA.I.GEH.BU.10WL	669
77.940.1053.4		669
77.940.1653.0	ADA.I.GEH.BU.16WL	669
77.940.1653.4		669
77.940.2453.0	ADA.I.GEH.BU.24WL	669
77.940.2453.4		669
77.945.1053.0	ADA.I.GEH.BU.10WR	669
77.945.1053.4		669
77.945.1653.0	ADA.I.GEH.BU.16WR	669
77.945.1653.4		669
77.945.2453.0	ADA.I.GEH.BU.24WR	669
77.945.2453.4		669
77.950.1053.0	ADA.I.GEH.ST.10WL	669
77.950.1053.4		669
77.950.1653.0	ADA.I.GEH.ST.16WL	669
77.950.1653.4		669
77.950.2453.0	ADA.I.GEH.ST.24WL	669
77.950.2453.4		669

contents

Part no.	Type	section / page
77.955.1053.0	ADA.I.GEH.ST.10WR	669
77.955.1053.4		669
77.955.1653.0	ADA.I.GEH.ST.16WR	669
77.955.1653.4		669
77.955.2453.0	ADA.I.GEH.ST.24WR	669
77.955.2453.4		669
78.000.0653.0	REVOS MOD.RAHM.BU	742
78.000.1053.0	REVOS MOD.RAHM.BU	739
78.000.1653.0	REVOS MOD.RAHM.BU	742
78.000.2453.0	REVOS MOD.RAHM.BU	742
78.001.2053.0	REVOS MODULBU.20P	740
78.002.1053.0	REVOS MODULBU.10P	740
78.003.0453.0	REVOS MODULBU. 4P	740
78.003.0553.0	REVOS MODULBU. 5P	740
78.004.0353.0	REVOS MODULBU. 3P	739
78.010.0653.0	REVOS MOD.RAHM.ST	742
78.010.1053.0	REVOS MOD.RAHM.ST	739
78.010.1653.0	REVOS MOD.RAHM.ST	742
78.010.2453.0	REVOS MOD.RAHM.ST	742
78.011.2053.0	REVOS MODULST.20P	740
78.012.1053.0	REVOS MODULST.10P	740
78.013.0453.0	REVOS MODULST. 4P	740
78.013.0553.0	REVOS MODULST. 5P	740
78.014.0353.0	REVOS MODULST. 3P	739
80.010.0005.0	WRS-REL-1S-250V5A	460
80.010.0007.0	WRS-REL-1S-48V20M	460
80.010.0008.0	WRS-REL-1W-250V5A	460
80.010.0009.0	WRS-REL-1W-48V20M	460
80.010.0010.0	WRS-REL-1W-250V16	461
80.010.0011.0	WR1-230-1W-250V4A	456
80.010.1002.0	WRS-REL-2W-48V20M	461
80.010.1003.0	WRS-REL-2W-250V5A	461
80.010.1100.0	WR1-DUO-2W-250V5A	458
80.010.1102.0	WR4-115-1W-250V4A	456
80.010.1104.0	WR4-115-2W-250V4A	458
80.010.1106.0	WR4-230-1W-250V4A	457
80.010.1108.0	WR4-230-2W-250V4A	459
80.010.1110.0	WR8-115-1W-250V4A	456
80.010.1112.0	WR8-115-2W-250V4A	458
80.010.1114.0	WR8-230-1W-250V4A	457
80.010.1116.0	WR8-230-2W-250V4A	459
80.010.4005.0	FLARE-24V-1W-48V20M	442
80.010.4100.0	FLARE-24DC-1W-250V6A-F	442
80.010.4101.0	FLARE-24V-1S-250V6A-HA	446
80.010.4103.0	FLARE-24DC-2W-250V6A-F	443
80.010.4105.0	FLARE-24V-1W-48V20M-F	442
80.010.4106.0	FLARE-12DC-1W-250V6A-F	442
80.010.4120.0	FLARE-24V-1W-250V6A-CUT	446
80.010.4131.0	FLARE-110V-1W-250V6A-F	442
80.010.4141.0	FLARE-230V-1W-250V6A-F	442
80.020.0004.0	WRS-SSAC1-250V6A	481
80.020.2001.0	WRS-SSAC1-250V4A	481
80.020.2003.0	WRS-SSDC-60V3A	480
80.020.2004.0	WRS-SSDC-60V5A	480
80.020.4100.0	FLARE-24VDC/48VDC-0,5A	478
80.020.4101.0	FLARE-24VDC/48VDC-2A	478
80.020.4102.0	FLARE-115V/48VDC-0,5A	478
80.020.4103.0	FLARE-230VAC/48VDC-0,5A	479
80.020.4150.0	FLARE-24VDC/230VAC-0,5A	479
80.020.6000.0	CEMOS-SSAC3-400V-2A	537
80.020.6003.0	CEMOS-SSPHC-400V-2,5A	537
80.060.0000.1	DIPOS UMC 12,5	582
80.060.0001.1	DIPOS UMC 12,5	582
80.060.0010.1	DIPOS PT100	499
80.060.0011.1	DIPOS PT100	499
80.060.0020.1	DIPOS KSQ	508
80.060.0021.1	DIPOS KSQ	508
80.060.0030.1	DIPOS TC	500
80.060.0031.1	DIPOS TC	500
80.060.1000.1		582
80.060.1001.1		582
80.060.2000.1		583
80.060.2001.1		583
80.061.0010.3	dipos EM	582
80.061.1010.3		582
80.061.2010.3		583
80.063.4001.1		444
80.063.4009.1		444
80.063.4021.1		444
80.063.4023.1		444
80.063.4025.1		444
80.063.4026.1		444
80.063.4029.3	FLARE MOVE BZ SERIE 38	444
80.063.4031.0		444
80.063.4031.1		444
80.063.4032.0		444
80.063.4032.1		444
80.063.4034.0		445
80.063.4034.1		445
80.063.4129.3	FLARE MOVE BM SERIE 38	444
81.000.1000.0	BGL-25VAC-2,5ADC	526
81.000.3000.0	WRS-T115/230-300M	524
81.000.3010.0	WPS-115/230-24V1A	524
81.000.6010.0	WIPOS 24VDC/2,0A 1PH V	518
81.000.6030.0	WIPOS 24VDC/5,0A 1PH V	518
81.000.6031.0	WIPOS 24VDC/5,0A 1PH H	520
81.000.6040.0	WIPOS 24VDC/10A 1PH V	519
81.000.6041.0	WIPOS 24VDC/10A 1PH H	520
81.000.6050.0	WIPOS 24VDC/20A 1PH V	519
81.000.6051.0	WIPOS 24VDC/20A 1PH H	521
81.000.6053.0	WIPOS 24VDC/20A 3PH H	522
81.000.6063.0	WIPOS 24VDC/40A 3PH H	522
81.010.1000.0	DRA-400V-250V3A	543
81.020.3000.0	WRS-TIMER-250V5A	463
81.020.4100.0	FLARE-TIMER-S-250V6A	462
81.020.4101.0	FLARE-PID/0100-S-250V6A	462
81.020.4102.0	FLARE-PID/0060-S-250V6A	462
82.011.3004.0	DIPOS PT100-3 0-400C	499
82.011.30XX.0		499
82.011.37XX.0		499
82.011.38XX.0		499
82.011.40XX.0		499
82.011.47XX.0		499
82.011.48XX.0		499
82.021.08XX.0		500
82.021.1812.0	DIPOS TC-K 0-1200C	500
82.021.18XX.0		500
82.081.0000.0	DIPOS KSQ 9.5 .. 10.5V	508
83.030.0000.1	RICOS BC-DP	410
83.030.0001.1	RICOS EC-DP	414
83.030.0010.0	RICOS SOCKET KNOT-DP	410
83.030.0011.0	RICOS SOCKET FINAL-DP	410
83.030.0012.0		410
83.030.1000.1	RICOS DP 16 I	428
83.030.1100.1	RICOS DP 8 I/0	428
83.030.1200.1	RICOS DP 16 O	428
83.030.1300.1	RICOS DP 8I 8I/0	428
83.031.0000.1	RICOS BC-S	410
83.031.0001.1	RICOS EC-S	414
83.031.0010.0	RICOS SOCKET FEMALE-S	410
83.031.0011.0	RICOS SOCKET MALE-S	410
83.031.1000.1	RICOS S 16 I	428
83.031.1100.1	RICOS S 8 I/0	428
83.031.1200.1	RICOS S 16 O	428
83.031.1300.1	RICOS S 8I 8I/0	428
83.032.0000.1	RICOS BC-CAN-DN	411
83.032.0001.1	RICOS EC-CAN-DN	415
83.032.1000.1	RICOS CAN-DN 16 I	429
83.032.1100.1	RICOS CAN-DN 8 I/0	429
83.032.1200.1	RICOS CAN-DN 16 O	429
83.032.1300.1	RICOS CAN-DN 8I 8I/0	429
83.033.0000.1	RICOS BC-CANOPEN	411
83.033.0001.1	RICOS EC-CANOPEN	415
83.033.1000.1	RICOS CANOPEN 16 I	429
83.033.1100.1	RICOS CANOPEN 8 I/0	429
83.033.1200.1	RICOS CANOPEN 16 O	429
83.033.1300.1	RICOS CANOPEN 8I 8I/0	429
83.034.0000.1		412
83.035.1210.1		420
83.035.3000.1	RICOS 16 I	416
83.035.3005.1		420
83.035.3100.1	RICOS 8 I/O	416
83.035.3200.1	RICOS 16 O	419
83.035.3300.1	RICOS 8I 8I/O	419
83.035.4000.1	RICOS 4AI / +-10V	424
83.035.4001.1	RICOS 4AI / 10V	424
83.035.4010.1	RICOS 4AI / 20MA	426
83.035.4040.1	RICOS 4AI / PT100	423
83.035.4050.1	RICOS 4AI / TC	423
83.035.4100.1	RICOS 4AI4AO / +-10V	425
83.035.4101.1	RICOS 4AI4AO / 10V	425
83.035.4110.1	RICOS 4AI4AO / 20MA	427
83.035.4111.1	RICOS 4AI4AO / 4-20MA	427
83.035.5000.1	RICOS 4I AC 115V	417
83.035.5005.1	RICOS 4I AC 230V	417
83.035.5200.1	RICOS 4O RELAY	418
83.035.5400.1	RICOS COUNTER	422
83.035.5410.1	RICOS POSITION	422
83.039.0000.0		416
83.039.0000.0	RICOS PV-A	416
83.039.0000.1		418
86.010.0053.0	WEB1001 LEERG.B1	584
86.020.0053.0	WEB1001 LEERG.B2	584
86.030.0053.0	WEB1001 LEERG.B3	585
86.030.6353.0	DNU-H-400V-250V4A	542
86.040.0053.0	WEB1001 LEERG.B4	585
87.010.0053.0	WEB1001 LEERG.B1	584
87.010.2053.0	SSM-7E230V	541
87.010.7453.0	SBS-4SI-230V6,3A	540
87.010.7653.0	SBS-4SI-24V6,3A	540
87.020.0053.0	WEB1001 LEERG.B2	584
87.030.0053.0	WEB1001 LEERG B3	585
87.030.1053.0	SSM-7E230V-250V5A	541
87.030.6353.0	DNU-U-400V-250V4A	542
87.030.6453.0	DSU-400V-250V4A	542
87.040.0053.0	WEB1001 LEERG.B4	585
87.040.3053.0	LPB-14L-250V1A	540
87.060.0053.0	WEB1001 LEERG.B6	586
87.070.0053.0	WEB1001 LEERG.B7	586
87.080.0053.0	WEB1001 LEERG.B8	587
87.090.0053.0	WEB1001 LEERG.B9	587
87.110.6253.0	TMS-101-250V5A	539
87.200.2200.3	BUCHSE D-SUB 9	560
87.200.2201.3	BUCHSE D-SUB 15	560
87.200.2202.3	BUCHSE D-SUB 25	560
87.200.2203.3	BUCHSE D-SUB 37	560
87.200.2204.3	BUCHSE D-SUB 50	560
87.200.2205.3	STECKER D-SUB 9	560
87.200.2206.3	STECKER D-SUB 15	560
87.200.2207.3	STECKER D-SUB 25	560
87.200.2208.3	STECKER D-SUB 37	560
87.200.2209.3	STECKER D-SUB 50	560
87.210.2201.3	FLK-SR 10	561
87.210.2202.3	FLK-SR 14	561
87.210.2203.3	FLK-SR 16	561
87.210.2204.3	FLK-SR 20	561
87.210.2205.3	FLK-SR 26	561
87.210.2207.3	FLK-SR 34	561
87.210.2208.3	FLK-SR 40	561
87.210.2210.3	FLK-SR 50	561
87.210.2211.3	FLK-SR 60	561
87.210.2212.3	FLK-SR 64	561
87.220.0753.3	M - PB 4 SP	482
87.220.0853.3	M - PB 8 SP	482
87.220.1353.3	M - PB 1 SR	482
87.220.1453.3	M - PB 4 SG	483
87.220.1553.3	M - PB 8 SG	483
87.220.1853.0	RAB - SS 4	454
87.220.1953.3	RAB-FSS 8	454
87.220.2253.3	RAB-FSS 16	454
87.220.4753.3	RAB - SS 4/2	455
87.220.4853.3	RAB - SS 8/2	455
87.220.7553.0	R12- 12V-W-LED	454
87.221.5553.0	RAB - SS 4 M	454
87.221.5853.0	FRONTSTECKER 115	562
87.221.5953.0	EAS-UE/D-115	562
87.221.6053.0	EAS-UE/D-L-115	562
87.221.6353.0	UEBERGABE UNIVERSAL-S5	563
87.221.6653.0	RAB - FS16 W A-S5	566
87.221.6753.0	RAB - FS16 W B-S5	566
87.222.5853.0	FRONTSTECKER 135/150	564
87.222.5953.0	EAS-UE / D-135	564
87.222.6053.0	EAS-UE / D-L-135	564
87.222.6353.0	UEBERGABE UNIVERSAL-S5	565
87.230.0453.0	FSR-25VAC-5V1A	528
87.230.0553.0	FSR-25VAC-12V1A	528
87.230.0653.0	FSR-25VAC-15V1A	528
87.230.0753.0	FSR-28VAC-24V1A	528
87.230.1553.0	WPS-T115/230-60VA	525
87.230.2053.0	BGL-40VAC-3ADC	526
90.100.0554.0	300	182
90.100.0754.0	301	182
90.100.0854.0	303	182
90.100.1054.0	305	182
90.100.1154.0	300 B	182
90.100.1254.0	300 K	182
90.100.1354.0	300 B K	182
90.100.1454.0	301 K	182
90.100.1554.0	303 K	182
90.100.1654.0	305 K	182
90.800.1055.1	319 / 13.5 K SCHW.	182
90.800.1055.8	319 / 13.5 K ELFB.	182
90.800.2055.1	319 / 17.5 K SCHW.	182
90.800.2055.8	319 / 17.5 K ELFB.	182
90.810.3055.0	315 GK	182
90.811.3055.0	315 GC	182
93.001.1055.0	ST28/10 B/V0	219
93.002.1055.0	ST28/10 S/V0	219
93.003.1055.0	ST28/10 BS/V0	219
93.004.0056.0	RSV 2 GRAU	207
93.004.0056.6	RSV 2 BLAU	207
93.031.2055.0	ST25/5 B/V0	218
93.032.2055.0	ST25/5 S/V0	218
93.032.2455.0	ST25/5 SV/V0	218
93.101.2053.0	ST29/10 BC	320
93.102.0055.0	ST29/10 S/V0	205
95.000.0006.0		801
95.000.0007.0		801
95.000.0008.0		801
95.101.0612.0	CZ 0,5 -2,5 MM2 F.RV2/S	207
95.101.0800.0	GRUNDZANGE	291
95.101.0800.0	GRUNDZANGE	631
95.101.0800.0	GRUNDZANGE	798
95.101.0900.0	PRESSWERKZEUG	798
95.101.1000.0	PRESSWERKZEUG	798
95.101.1100.0	PRESSWERKZEUG	799
95.101.1200.0	PRESSWERKZEUG	799
95.350.0100.0	ABISOLIERZANGE	799
95.502.0000.0	BEZEICHNUNGS-COMPUTER	90
95.502.0100.0		49
95.502.0118.0		49
95.502.0125.0	TUSCHESTIFT 0.25	49
95.502.0135.0	TUSCHESTIFT 0.35	49
95.502.0150.0		49
95.502.0170.0		49

contents of part number

contents PART NUMBER

Part no.	Type	section / page
95.502.0197.0		49
95.502.0198.0		49
95.502.0199.0		49
95.502.0230.0		49
95.502.0234.0		49
95.502.0270.0		49
95.502.0274.0		49
95.502.0425.0		49
95.502.0435.0		49
95.502.0450.0		49
95.502.0470.0		49
95.502.0602.0		49
95.502.0621.0		49
95.502.0622.0		49
95.502.0623.0		49
95.502.0624.0		49
98.060.0000.0	1039 M	263
98.090.0000.0	9021/15X5,5EN60715	171
98.090.0000.0	9021/15X5,5EN60715	802
98.090.0015.0	9021/15X5,5EN60715	40
98.090.0015.0	9021/15X5,5EN60715	802
98.095.3000.0		802
98.190.0000.0	9006 EN 60715 - G 32	102
98.190.0000.0	9006 EN 60715 - G 32	584
98.190.0000.0	9006 EN 60715 - G 32	802
98.190.1000.0	9006 GELOCHT	171
98.190.1000.0	9006 GELOCHT	802
98.210.0000.0	9006 AL 32	171
98.210.0000.0	9006 AL 32	802
98.220.0000.0	9006 CU EN 60715 - G 32	110
98.220.0000.0	9006 CU EN 60715 - G 32	802
98.290.0000.0	9813 M 10X 3 1000MM	72
98.290.1000.0	9813 M SN 10X3 1000MM	24
98.291.1000.0	18 X 3 M SN 1000MM	213
98.300.0000.0	35X27X7,5 EN 60715 2M	20
98.300.0000.0	35X27X7,5 EN 60715 2M	308
98.300.0000.0	35X27X7,5 EN 60715 2M	584
98.300.0000.0	35X27X7,5 EN 60715 2M	803
98.300.0010.0	35x27x7,5 EN60715 BLANK	46
98.300.1000.0	35X27X 7,5 GELOCHT	19
98.300.1000.0	35X27X 7,5 GELOCHT	803
98.305.1000.0	35X27X7,5 EN 60715 1M	803
98.310.0000.0	TRAGSCHIENE 2M	215
98.320.0000.0	6 X 6 2000MM	216
98.325.1000.0	6 X 6 1000MM	216
98.360.0000.0	35 X 24 X 15 EN 60715	20
98.360.0000.0	35 X 24 X 15 EN 60715	308
98.360.0000.0	35 X 24 X 15 EN 60715	584
98.360.0000.0	35 X 24 X 15 EN 60715	803
98.360.0004.0	35x24x15 EN 60715 FZN	46
98.370.0000.0	35 X 27 X 15	38
98.370.0000.0	35 X 27 X 15	803
98.370.1000.0	35 X 27 X 15 GELOCHT 2M	46
98.370.1000.0	35 X 27 X 15 GELOCHT 2M	803
98.375.1000.0	35 X 27 X 15 GELOCHT 1M	803
98.380.0000.0	35X24X15 EN60715 CU	47
98.380.0000.0	35X24X15 EN60715 CU	803
98.400.0000.0	ANKERSCHIENE 2M	210
99.000.0920.8	9705A/6,7/ 12 B 1- 9	790
99.002.0920.8	9705A/6,7/2X 6 B 1- 6	790
99.003.0920.8	9705A/6,7/ 12 B 1-10	790
99.004.0920.8	9705A/6,7/2X12 B 1-16	790
99.005.0920.8	9705A/6,7/2X12 B 1-24	790
99.202.9996.0	8113 S / 2 G OB GR OF	297
99.202.9996.2	8213 S / 2 W OB GR OF	299
99.203.9996.0	8113 S / 3 G OB GR OF	297
99.203.9996.2	8213 S / 3 W OB GR OF	299
99.204.9996.0	8113 S / 4 G OB GR OF	297
99.204.9996.2	8213 S / 4 W OB GR OF	299
99.205.9996.0	8113 S / 5 G OB GR OF	297
99.205.9996.2	8213 S / 5 W OB GR OF	299
99.206.9996.0	8113 S / 6 G OB GR OF	297
99.206.9996.2	8213 S / 6 W OB GR OF	299
99.207.9996.0	8113 S / 7 G OB GR OF	297
99.207.9996.2	8213 S / 7 W OB GR OF	299
99.208.9996.0	8113 S / 8 G OB GR OF	297
99.208.9996.2	8213 S / 8 W OB GR OF	299
99.209.9996.0	8113 S / 9 G OB GR OF	297
99.209.9996.2	8213 S / 9 W OB GR OF	299
99.210.9996.0	8113 S / 10 G OB GR OF	297
99.210.9996.2	8213 S / 10 W OB GR OF	299
99.211.9996.0	8113 S / 11 G OB GR OF	297
99.211.9996.2	8213 S / 11 W OB GR OF	299
99.212.9996.0	8113 S / 12 G OB GR OF	297
99.212.9996.2	8213 S / 12 W OB GR OF	299
99.213.9996.0	8113 S / 13 G OB GR OF	297
99.213.9996.2	8213 S / 13 W OB GR OF	299
99.214.9996.0	8113 S / 14 GOF OB	297
99.214.9996.2	8213 S / 14 W OB GR OF	299
99.215.9996.0	8113 S / 15 G OB GR OF	297
99.215.9996.2	8213 S / 15 W OB GR OF	299
99.216.9996.0	8113 S / 16 G OB GR OF	297
99.216.9996.2	8213 S / 16 W OB GR OF	299
99.232.9996.1	8213 S / 2 G OB GR OF	297
99.233.9996.1	8213 S / 3 G OB GR OF	297
99.234.9996.1	8213 S / 4 G OB GR OF	297
99.235.9996.1	8213 S / 5 G OB GR OF	297
99.236.9996.1	8213 S / 6 G OB GR OF	297
99.237.9996.1	8213 S / 7 G OB GR OF	297
99.238.9996.1	8213 S / 8 G OB GR OF	297
99.239.3564.7	9526832	385
99.239.9996.1	8213 S / 9 G OB GR OF	297
99.240.9996.1	8213 S / 10 G OB GR OF	297
99.241.9996.1	8213 S / 11 G OB GR OF	297
99.242.9996.1	8213 S / 12 G OB GR OF	297
99.243.3564.7	9526826	385
99.243.9996.1	8213 S / 13 G OB GR OF	297
99.244.9996.1	8213 S / 14 G OB GR OF	297
99.245.9996.1	8213 S / 15 G OB GR OF	297
99.246.9996.1	8213 S / 16 G OB GR OF	297
99.259.3564.7	9526833	385
99.261.3521.9	EUROPAKLEMMLST.1P	258
99.262.3521.9	6E SONDERA.	258
99.262.9996.0	8113 S / 2 W OB GR OF	299
99.263.3521.9	6E SONDERA.	258
99.263.9996.0	8113 S / 3 W OB GR OF	299
99.264.3521.9	6E SONDERA.	258
99.264.9996.0	8113 S / 4 W OB GR OF	299
99.265.3521.9	6E SONDERA.	258
99.265.9996.0	8113 S / 5 W OB GR OF	299
99.266.3521.9	6E SONDERA.	258
99.266.9996.0	8113 S / 6 W OB GR OF	299
99.267.3521.9	6E SONDERA.	258
99.267.9996.0	8113 S / 7 W OB GR OF	299
99.268.3521.9	6E SONDERA.	258
99.268.9996.0	8113 S / 8 W OB GR OF	299
99.269.3521.9		258
99.269.9996.0	8113 S / 9 W OB GR OF	299
99.270.3521.9	6E SONDERA.	258
99.270.9996.0	8113 S / 10 W OB GR OF	299
99.271.9996.0	8113 S / 11 W OB GR OF	299
99.272.3521.9	W.NR.07060796 6E SONDER	258
99.272.9996.0	8113 S / 12 W OB GR OF	299
99.273.9996.0	8113 S / 13 W OB GR OF	299
99.274.9996.0	8113 S / 14 W OB GR OF	299
99.275.9996.0	8113 S / 15 W OB GR OF	299
99.276.9996.0	8113 S / 16 W OB GR OF	299
99.483.0000.0		388
99.700.0000.6	STVB. KOMPLETT	672
99.700.3329.7	GEHAEUSEUNTERTEIL	773
99.700.6905.5	BUCHSENTEIL	760
99.701.0000.6	STVB. KOMPLETT	672
99.701.3329.7	GEHAEUSEOBERTEIL	772
99.701.6905.5	STECKERTEIL	760
99.702.0000.6	STVB. KOMPLETT	672
99.702.3329.7	GEHAEUSEUNTERTEIL	773
99.703.0000.6	STVB. KOMPLETT	672
99.703.3329.7	GEHAEUSEOBERTEIL	772
99.704.3329.7	GEHAEUSEUNTERTEIL	773
99.705.3329.7	GEHAEUSEOBERTEIL	772
99.706.0000.6	STVB. KOMPLETT	672
99.706.3329.7	GEHAEUSEUNTERTEIL	773
99.707.0000.6	STVB. KOMPLETT	672
99.707.3329.7	GEHAEUSEOBERTEIL	772
99.708.0000.6	STVB. KOMPLETT	672
99.709.0000.6	STVB. KOMPLETT	672
99.710.3329.7	GEHAEUSEOBERTEIL	773
99.711.3329.7	GEHAEUSEOBERTEIL	773
99.713.3329.7	GEHAEUSEOBERTEIL	773
99.716.3329.7	GEHAEUSEOBERTEIL	773
99.718.0000.6	STVB. KOMPLETT	672
99.719.0000.6	STVB. KOMPLETT	672
99.720.0000.6	STVB. KOMPLETT	672
99.721.0000.6	STVB. KOMPLETT	672
99.721.3329.7	F.EIGSICH.ANL.ZINKDRCKG	772
99.723.3329.7	F.EIGSICH.ANL.ZINKDRCKG	772
99.724.0000.6		672
99.725.0000.6	STVB. KOMPLETT	672
99.726.0000.6	STVB. KOMPLETT	672
99.727.0000.6	STVB. KOMPLETT	672
99.727.3329.7	F.EIGSICH.ANL.ZINKDRCKG	772
99.801.3900.9	4Ω DC24V 2A	538
Z1.000.4753.0	SR - I 5	485
Z1.000.9153.0	SR - A 4	485
Z1.108.8453.0		24
Z1.296.3453.0	WIEBOX CN 19 GKL	594
Z1.296.3553.0	WIEBOX CN 19 GK	594
Z1.296.3853.0	WIEBOX CN 22 GKL	594
Z1.296.3953.0	WIEBOX CN 22 GK	594
Z1.296.4253.0	WIEBOX CN 26 GKL	595
Z1.296.4353.0	WIEBOX CN 26 GK	595
Z1.299.3053.0		243
Z1.299.3055.0	DIST-... /V0	38
Z1.299.3155.0	DIST-1N 4007 -1 /V0	38
Z1.299.3255.0	DIST-D /V0	38
Z1.299.3355.0	DIST-1N 4007 -2 /V0	38
Z1.299.4053.0		231
Z1.299.4055.0	SIST-... /V0	38
Z1.299.4155.0	SIST-LED /V0	38
Z1.299.4255.0	SIST- GL /V0	38
Z1.299.6153.0	PRUEFSTECKER VER.	176
Z1.299.7153.0	PRUEFSTECKER	189
Z1.299.8153.0	PRUEFSTECKER	176
Z1.299.9053.0	FUER WK 4E/U	176
Z1.299.9253.0	PST1-WK4	177
Z1.299.9453.0	PST1-WK4 MN	177
Z1.299.9553.0	PST10-WK4	177
Z1.299.9753.0		177
Z1.980.0040.0	SCHIENENTRAEGER	211
Z1.980.0153.0	N SH/35/F	213
Z1.990.2030.0	TRAGBOCK	215
Z2.123.7000.0	MAGAZIN M. 25 BU.	800
Z2.123.7100.0	MAGAZIN M. 25 BU.	800
Z2.123.7200.0	MAGAZIN M. 25 BU.	800
Z2.123.7300.0	MAGAZIN M. 25 BU.	800
Z2.123.7400.0	MAGAZ.M.25 BUCHS.	800
Z2.220.0121.0	FKK18 / 1 Z	217
Z2.220.0321.0	FKK18 / 2 Z	217
Z2.220.0421.0	FKK18 / 3 Z	217
Z2.302.0421.0	/ 70 E S35	111
Z2.302.0621.0	9700 A / 35 E S35	111
Z2.302.1321.0	9700 / 10 E / 1	211
Z2.803.0228.0	,0 BIS 11,0 MM	210
Z2.803.0328.0	,5 BIS 13,5 MM	210
Z2.803.0428.0	2,5 BIS 16,5 MM	210
Z2.803.1328.0	,5 BIS 6,5 MM	212
Z2.803.1428.0	,0 BIS 11,0 MM	212
Z2.803.1528.0	0,0 BIS 17,0 MM	212
Z2.803.1628.0	16,0 BIS 24,0 MM	212
Z2.803.2228.0	K 15,5 - 20,5	210
Z2.803.2328.0	K 19 - 27	210
Z2.803.2428.0	K 26 - 34	210
Z4.102.0480.0	BZ KL 16 / 4 Z	256
Z4.102.0680.0	BZ KL 16 / 6 Z	256
Z4.102.0880.0	BZ KL 16 / 8 Z	256
Z4.102.1280.0	BZ KL 16 / 12 Z	256
Z4.102.1680.0	BZ KL 16 / 16 Z	256
Z4.102.2080.0	BZ KL 16 / 20 Z	256
Z4.210.0652.0	BEZ.KLAPPSCHILD	183
Z4.210.1652.0	BEZ.KLAPPSCHILD	183
Z4.242.3753.0	BEZ.SCHILDTRAEGER	781
Z4.242.4053.0	BEZ.SCHILDTRAEGER	781
Z4.242.5053.0	9705 A / 5 /10/11MARCOM	49
Z4.242.5153.0	9705 AL/ 5 /10/ 6MARCOM	49
Z4.242.5153.0	9705 AL/ 5 /10/ 6MARCOM	442
Z4.242.6053.0	9705 A / 6 /10/11MARCOM	49
Z4.242.6153.0		179
Z4.242.6353.0		90
Z4.242.6753.0		49
Z4.242.6853.0		49
Z4.242.8053.0		49
Z4.243.8453.0		47
Z4.802.0480.0	BZ KL 16 / 4 Z B	256
Z4.802.2080.0	BZ KL 16 / 20 Z B	256
Z5.507.1321.0	KABELVERSCHRB.	776
Z5.507.1353.0	M 20 x 1,5 IP68	776
Z5.507.1453.1		758
Z5.507.1521.0	KABELVERSCHRB.	776
Z5.507.1553.0	M 25x1,5 IP68	776
Z5.507.1553.1		758
Z5.507.1721.0	KABELVERSCHRB.	776
Z5.507.1753.0	M 32 x 1,5 IP68	776
Z5.507.1921.0	M 40 x 1,5 IP68	776
Z5.507.1953.0	M 40x1,5 IP68	776
Z5.507.2121.0	M 16 x 1,5	776
Z5.507.2221.0	M 20 x 1,5	776
Z5.507.2321.0	M 25 x 1,5	776
Z5.507.2421.0	M 32 x 1,5	776
Z5.507.4821.0	M 20 x 1,5	777
Z5.507.5021.0	M25 x 1,5	777
Z5.507.5221.0	M 32 x 1,5	777
Z5.507.5821.0	M 20 x 1,5	777
Z5.507.6021.0	M 25 x 1,5	777
Z5.507.6221.0	M 32 x 1,5	777
Z5.507.6421.0	M 40 x 1,5	777
Z5.507.9521.0	M 16 x 1,5	777
Z5.507.9621.0	M 20 x 1,5	777
Z5.507.9721.0	M 25 x 1,5	777
Z5.507.9821.0	M 32 x 1,5	777
Z5.515.3310.0	WE SH 1/35	212
Z5.515.3410.0	WE SH 2/35	212
Z5.516.2511.0	9018 D	169
Z5.516.2711.0	9018 H	169
Z5.516.2811.0	9018 N	169
Z5.519.0310.0	SCHIENENHALTER	213
Z5.519.0410.0	SCHIENENHALTER	213
Z5.522.1923.0	2163	215
Z5.522.5010.0	9222	40
Z5.522.7053.0	9708	102
Z5.522.7553.0	9208 / S15	40
Z5.522.8553.0	9708 / 2 S 35	19
Z5.522.8553.0	9708 / 2 S 35	308
Z5.522.8553.0	9708 / 2 S 35	410
Z5.523.2453.0	BEF.HALTER	297
Z5.523.5153.0	9708 / 3 S35	173

contents

Part no.	Type	section / page
Z5.523.5653.0	WE 2/U	105
Z5.523.5753.0	WE 1/U	101
Z5.523.5753.0	WE 1/U	584
Z5.523.7653.0	BEFEST.HALT.KOMPL	319
Z5.523.7753.0	BEF.HALTER	295
Z5.523.7853.0	BEF.HALTER	295
Z5.523.9353.0	WEF 1/35	20
Z5.523.9353.0	WEF 1/35	308
Z5.530.0225.0	LP.STIFTLEISTE	318
Z5.530.0325.0	LP.STIFTLEISTE	318
Z5.530.0425.0	LP.STIFTLEISTE	318
Z5.530.0525.0	LP.STIFTLEISTE	318
Z5.530.0625.0	LP.STIFTLEISTE	318
Z5.530.0725.0	LP.STIFTLEISTE	318
Z5.530.0825.0	LP.STIFTLEISTE	318
Z5.530.0925.0	LP.STIFTLEISTE	318
Z5.530.1025.0	LP.STIFTLEISTE	318
Z5.530.1125.0	LP.STIFTLEISTE	318
Z5.530.1225.0	LP.STIFTLEISTE	318
Z5.530.1325.0	LP.STIFTLEISTE	318
Z5.530.1425.0	LP.STIFTLEISTE	318
Z5.530.1525.0	LP.STIFTLEISTE	318
Z5.530.1625.0	LP.STIFTLEISTE	318
Z5.530.3225.0	LP.STIFTLEISTE	318
Z5.530.3325.0	LP.STIFTLEISTE	318
Z5.530.3425.0	LP.STIFTLEISTE	318
Z5.530.3525.0	LP.STIFTLEISTE	318
Z5.530.3625.0	LP.STIFTLEISTE	318
Z5.530.3725.0	LP.STIFTLEISTE	318
Z5.530.3825.0	LP.STIFTLEISTE	318
Z5.530.3925.0	LP.STIFTLEISTE	318
Z5.530.4025.0	LP.STIFTLEISTE	318
Z5.530.4125.0	LP.STIFTLEISTE	318
Z5.530.4225.0	LP.STIFTLEISTE	318
Z5.530.4325.0	LP.STIFTLEISTE	318
Z5.530.4425.0	LP.STIFTLEISTE	318
Z5.530.4525.0	LP.STIFTLEISTE	318
Z5.530.4625.0	LP.STIFTLEISTE	318
Z5.530.6225.0	LP.STIFTLEISTE	318
Z5.530.6325.0	LP.STIFTLEISTE	318
Z5.530.6425.0	LP.STIFTLEISTE	318
Z5.530.6525.0	LP.STIFTLEISTE	318
Z5.530.6625.0	LP.STIFTLEISTE	318
Z5.530.6725.0	LP.STIFTLEISTE	318
Z5.530.6825.0	LP.STIFTLEISTE	318
Z5.530.8225.0	LP.STIFTLEISTE	318
Z5.530.8325.0	LP.STIFTLEISTE	318
Z5.530.8425.0	LP.STIFTLEISTE	318
Z5.530.8525.0	LP.STIFTLEISTE	318
Z5.530.8625.0	LP.STIFTLEISTE	318
Z5.530.8725.0	LP.STIFTLEISTE	318
Z5.530.8825.0	LP.STIFTLEISTE	318
Z5.531.0225.0	LP.STIFTLEISTE	316
Z5.531.0325.0	LP.STIFTLEISTE	316
Z5.531.0425.0	LP.STIFTLEISTE	316
Z5.531.0525.0	LP.STIFTLEISTE	316
Z5.531.0625.0	LP.STIFTLEISTE	316
Z5.531.0725.0	LP.STIFTLEISTE	316
Z5.531.0825.0	LP.STIFTLEISTE	316
Z5.531.0925.0	LP.STIFTLEISTE	316
Z5.531.1025.0	LP.STIFTLEISTE	316
Z5.531.1125.0	LP.STIFTLEISTE	316
Z5.531.1225.0	LP.STIFTLEISTE	316
Z5.531.1325.0	LP.STIFTLEISTE	316
Z5.531.1425.0	LP.STIFTLEISTE	316
Z5.531.1525.0	LP.STIFTLEISTE	316
Z5.531.1625.0	LP.STIFTLEISTE	316
Z5.531.3225.0	LP.STIFTLEISTE	316
Z5.531.3325.0	LP.STIFTLEISTE	316
Z5.531.3425.0	LP.STIFTLEISTE	316
Z5.531.3525.0	LP.STIFTLEISTE	316
Z5.531.3625.0	LP.STIFTLEISTE	316
Z5.531.3725.0	LP.STIFTLEISTE	316
Z5.531.3825.0	LP.STIFTLEISTE	316
Z5.531.3925.0	LP.STIFTLEISTE	316
Z5.531.4025.0	LP.STIFTLEISTE	316
Z5.531.4125.0	LP.STIFTLEISTE	316
Z5.531.4225.0	LP.STIFTLEISTE	316
Z5.531.4325.0	LP.STIFTLEISTE	316
Z5.531.4425.0	LP.STIFTLEISTE	316
Z5.531.4525.0	LP.STIFTLEISTE	316
Z5.531.4625.0	LP.STIFTLEISTE	316
Z5.532.0225.0	LP.STIFTLEISTE	317
Z5.532.0325.0	LP.STIFTLEISTE	317
Z5.532.0425.0	LP.STIFTLEISTE	317
Z5.532.0525.0	LP.STIFTLEISTE	317
Z5.532.0625.0	LP.STIFTLEISTE	317
Z5.532.0725.0	LP.STIFTLEISTE	317
Z5.532.0825.0	LP.STIFTLEISTE	317
Z5.532.0925.0	LP.STIFTLEISTE	317
Z5.532.1025.0	LP.STIFTLEISTE	317
Z5.532.1125.0	LP.STIFTLEISTE	317
Z5.532.1225.0	LP.STIFTLEISTE	317
Z5.532.1325.0	LP.STIFTLEISTE	317
Z5.532.1425.0	LP.STIFTLEISTE	317
Z5.532.1525.0	LP.STIFTLEISTE	317
Z5.532.1625.0	LP.STIFTLEISTE	317
Z5.532.3225.0	LP.STIFTLEISTE	317
Z5.532.3325.0	LP.STIFTLEISTE	317
Z5.532.3425.0	LP.STIFTLEISTE	317
Z5.532.3525.0	LP.STIFTLEISTE	317
Z5.532.3625.0	LP.STIFTLEISTE	317
Z5.532.3725.0	LP.STIFTLEISTE	317
Z5.532.3825.0	LP.STIFTLEISTE	317
Z5.532.3925.0	LP.STIFTLEISTE	317
Z5.532.4025.0	LP.STIFTLEISTE	317
Z5.532.4125.0	LP.STIFTLEISTE	317
Z5.532.4225.0	LP.STIFTLEISTE	317
Z5.532.4325.0	LP.STIFTLEISTE	317
Z5.532.4425.0	LP.STIFTLEISTE	317
Z5.532.4525.0	LP.STIFTLEISTE	317
Z5.532.4625.0	LP.STIFTLEISTE	317
Z5.533.7121.0	PRUEFSTECKER	357
Z5.533.7221.0	PRUEFSTECKER	357
Z5.533.8221.0	STECKERLEISTE	357
Z5.535.0225.0	8520 S / 2 G 0,8	324
Z5.535.0325.0	8520 S / 3 G 0,8	324
Z5.535.0425.0	8520 S / 4 G 0,8	324
Z5.535.0525.0	8520 S / 5 G 0,8	324
Z5.535.0625.0	8520 S / 6 G 0,8	324
Z5.535.0725.0	8520 S / 7 G 0,8	324
Z5.535.0825.0	8520 S / 8 G 0,8	324
Z5.535.0925.0		324
Z5.535.1025.0	8520 S / 10 G 0,8	324
Z5.535.1125.0	8520 S / 11 G 0,8	324
Z5.535.1225.0	8520 S / 12 G 0,8	324
Z5.535.1325.0	8520 S / 13 G 0,8	324
Z5.535.1425.0	8520 S / 14 G 0,8	324
Z5.535.1525.0	8520 S / 15 G 0,8	324
Z5.535.1625.0	8520 S / 16 G 0,8	324
Z5.535.3225.0	8520 S / 2 G 1,0	324
Z5.535.3325.0	8520 S / 3 G 1,0	324
Z5.535.3425.0	8520 S / 4 G 1,0	324
Z5.535.3525.0	8520 S / 5 G 1,0	324
Z5.535.3625.0	8520 S / 6 G 1,0	324
Z5.535.3725.0	8520 S / 7 G 1,0	324
Z5.535.3825.0	8520 S / 8 G 1.0	324
Z5.535.3925.0		324
Z5.535.4025.0	8520 S / 10 G 1,0	324
Z5.535.4125.0	8520 S / 11 G 1,0	324
Z5.535.4225.0	8520 S / 12 G 1,0	324
Z5.535.4325.0	8520 S / 13 G 1,0	324
Z5.535.4425.0	8520 S / 14 G 1,0	324
Z5.535.4525.0	8520 S / 15 G 1,0	324
Z5.535.4625.0	8520 S / 16 G 1,0	324
Z5.540.0225.0	LP.STIFTLEISTE	319
Z5.540.0325.0	LP.STIFTLEISTE	319
Z5.540.0425.0	LP.STIFTLEISTE	319
Z5.540.0525.0	LP.STIFTLEISTE	319
Z5.540.0625.0	LP.STIFTLEISTE	319
Z5.540.0725.0	LP:STIFTLEISTE	319
Z5.540.0825.0	LP.STIFTLEISTE	319
Z5.540.0925.0	LP.STIFTLEISTE	319
Z5.540.1025.0	LP.STIFTLEISTE	319
Z5.540.1125.0	LP.STIFTLEISTE	319
Z5.540.1225.0	LP.STIFTLEISTE	319
Z5.540.1325.0	LP.STIFTLEISTE	319
Z5.540.1425.0	LP.STIFTLEISTE	319
Z5.540.1525.0	LP.STIFTLEISTE	319
Z5.540.1625.0	LP.STIFTLEISTE	319
Z5.540.3225.0	LP.STIFTLEISTE	319
Z5.540.3325.0	LP.STIFTLEISTE	319
Z5.540.3425.0	LP.STIFTLEISTE	319
Z5.540.3525.0	LP.STIFTLEISTE	319
Z5.540.3625.0	LP.STIFTLEISTE	319
Z5.540.3725.0	LP.STIFTLEISTE	319
Z5.540.3825.0	LP.STIFTLEISTE	319
Z5.540.3925.0	LP.STIFTLEISTE	319
Z5.540.4025.0	LP.STIFTLEISTE	319
Z5.540.4125.0	LP.STIFTLEISTE	319
Z5.540.4225.0	LP.STIFTLEISTE	319
Z5.540.4325.0	LP.STIFTLEISTE	319
Z5.540.4425.0	LP.STIFTLEISTE	319
Z5.540.4525.0	LP.STIFTLEISTE	319
Z5.540.4625.0	LP.STIFTLEISTE	319
Z5.540.6225.0	LP.STIFTLEISTE	319
Z5.540.6325.0	LP.STIFTLEISTE	319
Z5.540.6425.0	LP.STIFTLEISTE	319
Z5.540.6525.0	LP.STIFTLEISTE	319
Z5.540.6625.0	LP.STIFTLEISTE	319
Z5.540.6725.0	LP.STIFTLEISTE	319
Z5.540.6825.0	LP.STIFTLEISTE	319
Z5.540.8225.0	LP.STIFTLEISTE	319
Z5.540.8325.0	LP.STIFTLEISTE	319
Z5.540.8425.0	LP.STIFTLEISTE	319
Z5.540.8525.0	LP.STIFTLEISTE	319
Z5.540.8625.0	LP.STIFTLEISTE	319
Z5.540.8725.0	LP.STIFTLEISTE	319
Z5.540.8825.0	LP.STIFTLEISTE	319
Z5.543.0153.0	PRUEFSTECKER	358
Z5.543.0253.0	PRUEFSTECKER	358
Z5.543.7000.0	MAGAZIN M. 25 ST.	800
Z5.543.7100.0	MAGAZIN M. 25 ST.	800
Z5.543.7200.0	MAGAZIN M. 25 ST.	800
Z5.543.7300.0	MAGAZIN M. 25 ST.	800
Z5.543.7400.0	MAGAZIN M. 25 ST.	800
Z5.553.2921.0	ST 2 / 2.3 ROT	19
Z5.553.2921.0	ST 2 / 2.3 ROT	353
Z5.553.3021.0	ST 2 / 4 SCHWARZ	176
Z5.553.9400.0	KURZSCHLUSSTECKER	176
Z5.563.0453.0	DIPOS KODIERAST	499
Z5.570.0056.0	BU 70.3 /16 REVZ	675
Z5.570.0156.0	BU 70.3 / 6 REVZ	675
Z5.570.0256.0	BU 70.3 /10 REVZ	675
Z5.570.0356.0	BU 70.3 /24 REVZ	675
Z5.570.0556.0	BU 72.3 /16 REVZ	679
Z5.570.0656.0	BU 72.3 / 6 REVZ	679
Z5.570.0756.0	BU 72.3 /10 REVZ	679
Z5.570.0856.0	BU 72.3 /24 REVZ	679
Z5.570.1056.0	BU 70.3 /16 REV	675
Z5.570.1156.0	BU 70.3 / 6 REV	675
Z5.570.1256.0	BU 70.3 /10 REV	675
Z5.570.1356.0	BU 70,3 /24 REV	675
Z5.570.1556.0	BU 72.3 /16 REV	679
Z5.570.1656.0	BU 72.3 / 6 REV	679
Z5.570.1756.0	BU 72.3 /10 REV	679
Z5.570.1856.0	BU 72.3 /24 REV	679
Z5.570.2056.0	BU 70.3 /16 RVZ	675
Z5.570.2156.0	BU 70.3 / 6 RVZ	675
Z5.570.2256.0	BU 70.3 /10 RVZ	675
Z5.570.2356.0	BU 70.3 /24 RVZ	675
Z5.570.2556.0	BU 72.3 /16 RVZ	679
Z5.570.2656.0	BU 72.3 / 6 RVZ	679
Z5.570.2756.0	BU 72.3 /10 RVZ	679
Z5.570.2856.0	BU 72.3 /24 RVZ	679
Z5.570.3056.0	BU 70.3 /16 RV	675
Z5.570.3156.0	BU 70.3 / 6 RV	675
Z5.570.3256.0	BU 70.3 /10 RV	675
Z5.570.3356.0	BU 70.3 /24 RV	675
Z5.570.3556.0	BU 72.3 /16 RV	679
Z5.570.3656.0	BU 72.3 / 6 RV	679
Z5.570.3756.0	BU 72.3 /10 RV	679
Z5.570.3856.0	BU 72.3 /24 RV	679
Z5.570.4056.0	BU 70.7 /16 REVZ	677
Z5.570.4156.0	BU 70.7 / 6 REVZ	677
Z5.570.4256.0	BU 70.7 /10 REVZ	677
Z5.570.4356.0	BU 70.7 /24 REVZ	677
Z5.570.4556.0	BU 72.7 /16 REVZ	681
Z5.570.4656.0	BU 72.7 / 6 REVZ	681
Z5.570.4756.0	BU 72.7 /10 REVZ	681
Z5.570.4856.0	BU 72.7 /24 REVZ	681
Z5.570.5056.0	BU 70.7 /16 REV	677
Z5.570.5156.0	BU 70.7 / 6 REV	677
Z5.570.5256.0	BU 70.7 /10 REV	677
Z5.570.5356.0	BU 70.7 /24 REV	677
Z5.570.5556.0	BU 72.7 /16 REV	681
Z5.570.5656.0	BU 72.7 / 6 REV	681
Z5.570.5756.0	BU 72.7 /10 REV	681
Z5.570.5856.0	BU 72.7 /24 REV	681
Z5.570.6056.0	BU 73.7 /40 REVZ	683
Z5.570.6156.0	BU 73.7 /64 REVZ	683
Z5.570.6556.0	BU 70.7 /16 RVZ	677
Z5.570.6656.0	BU 70.7 / 6 RVZ	677
Z5.570.6756.0	BU 70.7 /10 RVZ	677
Z5.570.6856.0	BU 70.7 /24 RVZ	677
Z5.570.7056.0	BU 73.7 /40 REV	683
Z5.570.7156.0	BU 73.7 /64 REV	683
Z5.570.7556.0	BU 72.7 /16 RVZ	681
Z5.570.7656.0	BU 72.7 / 6 RVZ	681
Z5.570.7756.0	BU 72.7 /10 RVZ	681
Z5.570.7856.0	BU 72.7 /24 RVZ	681
Z5.570.8056.0	BU 73.7 /40 RVZ	683
Z5.570.8156.0	BU 73.7 /64 RVZ	683
Z5.570.8556.0	BU 70.7 /16 RV	677
Z5.570.8656.0	BU 70.7 / 6 RV	677
Z5.570.8756.0	BU 70.7 /10 RV	677
Z5.570.8856.0	BU 70.7 /24 RV	677
Z5.570.9056.0	BU 73.7 /40 RV	683
Z5.570.9156.0	BU 73.7 /64 RV	683
Z5.570.9556.0	BU 72.7 /16 RV	681
Z5.570.9656.0	BU 72.7 / 6 RV	681
Z5.570.9756.0	BU 72.7 /10 RV	681
Z5.570.9856.0	BU 72.7 /24 RV	681
Z5.571.0056.0	ST 70.3 /16 REVZ	675
Z5.571.0156.0	ST 70.3 / 6 REVZ	675
Z5.571.0256.0	ST 70.3 /10 REVZ	675
Z5.571.0356.0	ST 70.3 /24 REVZ	675
Z5.571.0556.0	ST 72.3 /16 REVZ	679
Z5.571.0656.0	ST 72.3 / 6 REVZ	679
Z5.571.0756.0	ST 72.3 /10 REVZ	679
Z5.571.0856.0	ST 72.3 /24 REVZ	679
Z5.571.1056.0	ST 70.3 /16 REV	675
Z5.571.1156.0	ST 70.3 / 6 REV	675
Z5.571.1256.0	ST 70.3 /10 REV	675
Z5.571.1356.0	ST 70,3 /24 REV	675

contents of part number

contents PART NUMBER

Part no.	Type	section / page
Z5.571.1556.0	ST 72.3 /16 REV	679
Z5.571.1656.0	ST 72.3 / 6 REV	679
Z5.571.1756.0	ST 72,3 /10 REV	679
Z5.571.1856.0	ST 72.3 /24 REV	679
Z5.571.2056.0	ST 70.3 /16 RVZ	675
Z5.571.2156.0	ST 70.3 / 6 RVZ	675
Z5.571.2256.0	ST 70.3 /10 RVZ	675
Z5.571.2356.0	ST 70.3 /24 RVZ	675
Z5.571.2556.0	ST 72.3 /16 RVZ	679
Z5.571.2656.0	ST 72.3 / 6 RVZ	679
Z5.571.2756.0	ST 72.3 /10 RVZ	679
Z5.571.2856.0	ST 72.3 /24 RVZ	679
Z5.571.3056.0	ST 70.3 /16 RV	675
Z5.571.3156.0	ST 70.3 / 6 RV	675
Z5.571.3256.0	ST 70.3 /10 RV	675
Z5.571.3356.0	ST 70.3 /24 RV	675
Z5.571.3556.0	ST 72.3 /16 RV	679
Z5.571.3656.0	ST 72.3 / 6 RV	679
Z5.571.3756.0	ST 72.3 /10 RV	679
Z5.571.3856.0	ST 72.3 /24 RV	679
Z5.571.4056.0	ST 70.7 /16 REVZ	677
Z5.571.4156.0	ST 70.7 / 6 REVZ	677
Z5.571.4256.0	ST 70.7 /10 REVZ	677
Z5.571.4356.0	ST 70.7 /24 REVZ	677
Z5.571.4556.0	ST 72.7 /16 REVZ	681
Z5.571.4656.0	ST 72.7 / 6 REVZ	681
Z5.571.4756.0	ST 72.7 /10 REVZ	681
Z5.571.4856.0	ST 72.7 /24 REVZ	681
Z5.571.5056.0	ST 70.7 /16 REV	677
Z5.571.5156.0	ST 70.7 / 6 REV	677
Z5.571.5256.0	ST 70.7 /10 REV	677
Z5.571.5356.0	ST 70.7 /24 REV	677
Z5.571.5556.0	ST 72.7 /16 REV	681
Z5.571.5656.0	ST 72.7 / 6 REV	681
Z5.571.5756.0	ST 72.7 /10 REV	681
Z5.571.5856.0	ST 72.7 /24 REV	681
Z5.571.6056.0	ST 73.7 /40 REVZ	683
Z5.571.6156.0	ST 73.7 /64 REVZ	683
Z5.571.6556.0	ST 70.7 /16 RVZ	677
Z5.571.6656.0	ST 70.7 / 6 RVZ	677
Z5.571.6756.0	ST 70.7 /10 RVZ	677
Z5.571.6856.0	ST 70.7 /24 RVZ	677
Z5.571.7056.0	ST 73.7 /40 REV	683
Z5.571.7156.0	ST 73.7 /64 REV	683
Z5.571.7556.0	ST 72.7 /16 RVZ	681
Z5.571.7656.0	ST 72.7 / 6 RVZ	681
Z5.571.7756.0	ST 72.7 /10 RVZ	681
Z5.571.7856.0	ST 72.7 /24 RVZ	681
Z5.571.8056.0	ST 73.7 /40 RVZ	683
Z5.571.8156.0	ST 73.7 /64 RVZ	683
Z5.571.8556.0	ST 70.7 /16 RV	677
Z5.571.8656.0	ST 70.7 / 6 RV	677
Z5.571.8756.0	ST 70.7 /10 RV	677
Z5.571.8856.0	ST 70.7 /24 RV	677
Z5.571.9056.0	ST 73.7 /40 RV	683
Z5.571.9156.0	ST 73.7 /64 RV	683
Z5.571.9556.0	ST 72.7 /16 RV	681
Z5.571.9656.0	ST 72.7 / 6 RV	681
Z5.571.9756.0	ST 72.7 /10 RV	681
Z5.571.9856.0	ST 72.7 /24 RV	681
Z5.572.0056.0	BU 70.1 /16 REV WL	675
Z5.572.0156.0	BU 70.1 / 6 REV WL	675
Z5.572.0256.0	BU 70.1 /10 REV WL	675
Z5.572.0356.0	BU 70.1 /24 REV WL	675
Z5.572.0556.0	BU 72.1 /16 REV WL	679
Z5.572.0656.0	BU 72.1 / 6 REV WL	679
Z5.572.0756.0	BU 72.1 /10 REV WL	679
Z5.572.0856.0	BU 72.1 /24 REV WL	679
Z5.572.1056.0	BU 70.1 /16 REV WR	675
Z5.572.1156.0	BU 70.1 / 6 REV WR	675
Z5.572.1256.0	BU 70.1 /10 REV WR	675
Z5.572.1356.0	BU 70.1 /24 REV WR	675
Z5.572.1556.0	BU 72.1 /16 REV WR	679
Z5.572.1656.0	BU 72.1 / 6 REV WR	679
Z5.572.1756.0	BU 72.1 /10 REV WR	679
Z5.572.1856.0	BU 72.1 /24 REV WR	679
Z5.572.2056.0	BU 70.1 /16 RV WL	675
Z5.572.2156.0	BU 70.1 / 6 RV WL	675
Z5.572.2256.0	BU 70.1 /10 RV WL	675
Z5.572.2356.0	BU 70.1 /24 RV WL	675
Z5.572.2556.0	BU 72.1 /16 RV WL	679
Z5.572.2656.0	BU 72.1 / 6 RV WL	679
Z5.572.2756.0	BU 72.1 /10 RV WL	679
Z5.572.2856.0	BU 72.1 /24 RV WL	679
Z5.572.3056.0	BU 70.1 /16 RV WR	675
Z5.572.3156.0	BU 70.1 / 6 RV WR	675
Z5.572.3256.0	BU 70.1 /10 RV WR	675
Z5.572.3356.0	BU 70.1 /24 RV WR	675
Z5.572.3556.0	BU 72.1 /16 RV WR	679
Z5.572.3656.0	BU 72.1 / 6 RV WR	679
Z5.572.3756.0	BU 72.1 /10 RV WR	679
Z5.572.3856.0	BU 72.1 /24 RV WR	679
Z5.572.4056.0	BU 70.1 /16 REV U WL	675
Z5.572.4156.0	BU 70.1 / 6 REV U WL	675
Z5.572.4256.0	BU 70.1 /10 REV U WL	675
Z5.572.4356.0	BU 70.1 /24 REV U WL	675
Z5.572.4556.0	BU 72.1 /16 REV U WL	679
Z5.572.4656.0	BU 72.1 / 6 REV U WL	679
Z5.572.4756.0	BU 72.1 /10 REV U WL	679
Z5.572.4856.0	BU 72.1 /24 REV U WL	679
Z5.572.5056.0	BU 70.1 /16 REV U WR	675
Z5.572.5156.0	BU 70.1 / 6 REV U WR	675
Z5.572.5256.0	BU 70.1 /10 REV U WR	675
Z5.572.5356.0	BU 70.1 /24 REV U WR	675
Z5.572.5556.0	BU 72.1 /16 REV U WR	679
Z5.572.5656.0	BU 72.1 / 6 REV U WR	679
Z5.572.5756.0	BU 72.1 /10 REV U WR	679
Z5.572.5856.0	BU 72.1 /24 REV U WR	679
Z5.572.6056.0	BU 70.1 /16 RV U WL	675
Z5.572.6156.0	BU 70.1 / 6 RV U WL	675
Z5.572.6256.0	BU 70.1 /10 RV U WL	675
Z5.572.6356.0	BU 70.1 /24 RV U WL	675
Z5.572.6556.0	BU 72.1 /16 RV U WL	679
Z5.572.6656.0	BU 72.1 / 6 RV U WL	679
Z5.572.6756.0	BU 72.1 /10 RV U WL	679
Z5.572.6856.0	BU 72.1 /24 RV U WL	679
Z5.572.7056.0	BU 70.1 /16 RV U WR	675
Z5.572.7156.0	BU 70.1 / 6 RV U WR	675
Z5.572.7256.0	BU 70.1 /10 RV U WR	675
Z5.572.7356.0	BU 70.1 /24 RV U WR	675
Z5.572.7556.0	BU 72.1 /16 RV U WR	679
Z5.572.7656.0	BU 72.1 / 6 RV U WR	679
Z5.572.7756.0	BU 72.1 /10 RV U WR	679
Z5.572.7856.0	BU 72.1 /24 RV U WR	679
Z5.572.8056.0	BU 73.1 /40 REV WL	683
Z5.572.8156.0	BU 73.1 /64 REV WL	683
Z5.572.8356.0	BU 73.1 /40 REV WR	683
Z5.572.8456.0	BU 73.1 /64 REV WR	683
Z5.572.8656.0	BU 73.1 /40 RV WL	683
Z5.572.8756.0	BU 73.1 /64 RV WL	683
Z5.572.8956.0	BU 73.1 /40 RV WR	683
Z5.572.9056.0	BU 73.1 /64 RV WR	683
Z5.572.9156.0	BU 73.1 /40 REV U WL	683
Z5.572.9256.0	BU 73.1 /64 REV U WL	683
Z5.572.9356.0	BU 73.1 /40 REV U WR	683
Z5.572.9456.0	BU 73.1 /64 REV U WR	683
Z5.572.9556.0	BU 73.1 /40 RV U WL	683
Z5.572.9656.0	BU 73.1 /64 RV U WL	683
Z5.572.9756.0	BU 73.1 /40 RV U WR	683
Z5.572.9856.0	BU 73.1 /64 RV U WR	683
Z5.573.0056.0	ST 70.1 /16 REV WL	675
Z5.573.0156.0	ST 70.1 / 6 REV WL	675
Z5.573.0256.0	ST 70.1 /10 REV WL	675
Z5.573.0356.0	ST 70.1 /24 REV WL	675
Z5.573.0556.0	ST 72.1 /16 REV WL	679
Z5.573.0656.0	ST 72.1 / 6 REV WL	679
Z5.573.0756.0	ST 72.1 /10 REV WL	679
Z5.573.0856.0	ST 72.1 /24 REV WL	679
Z5.573.1056.0	ST 70.1 /16 REV WR	675
Z5.573.1156.0	ST 70.1 / 6 REV WR	675
Z5.573.1256.0	ST 70.1 /10 REV WR	675
Z5.573.1356.0	ST 70.1 /24 REV WR	675
Z5.573.1556.0	ST 72.1 /16 REV WR	679
Z5.573.1656.0	ST 72.1 / 6 REV WR	679
Z5.573.1756.0	ST 72.1 /10 REV WR	679
Z5.573.1856.0	ST 72.1 /24 REV WR	679
Z5.573.2056.0	ST 70.1 /16 RV WL	675
Z5.573.2156.0	ST 70.1 / 6 RV WL	675
Z5.573.2256.0	ST 70.1 /10 RV WL	675
Z5.573.2356.0	ST 70.1 /24 RV WL	675
Z5.573.2556.0	ST 72.1 /16 RV WL	679
Z5.573.2656.0	ST 72.1 / 6 RV WL	679
Z5.573.2756.0	ST 72.1 /10 RV WL	679
Z5.573.2856.0	ST 72.1 /24 RV WL	679
Z5.573.3056.0	ST 70.1 /16 RV WR	675
Z5.573.3156.0	ST 70.1 / 6 RV WR	675
Z5.573.3256.0	ST 70.1 /10 RV WR	675
Z5.573.3356.0	ST 70.1 /24 RV WR	675
Z5.573.3556.0	ST 72.1 /16 RV WR	679
Z5.573.3656.0	ST 72.1 / 6 RV WR	679
Z5.573.3756.0	ST 72.1 /10 RV WR	679
Z5.573.3856.0	ST 72.1 /24 RV WR	679
Z5.573.4056.0	ST 70.1 /16 REV U WL	675
Z5.573.4156.0	ST 70.1 / 6 REV U WL	675
Z5.573.4256.0	ST 70.1 /10 REV U WL	675
Z5.573.4356.0	ST 70.1 /24 REV U WL	675
Z5.573.4556.0	ST 72.1 /16 REV U WL	679
Z5.573.4656.0	ST 72.1 / 6 REV U WL	679
Z5.573.4756.0	ST 72.1 /10 REV U WL	679
Z5.573.4856.0	ST 72.1 /24 REV U WL	679
Z5.573.5056.0	ST 70.1 /16 REV U WR	675
Z5.573.5156.0	ST 70.1 / 6 REV U WR	675
Z5.573.5256.0	ST 70.1 /10 REV U WR	675
Z5.573.5356.0	ST 70.1 /24 REV U WR	675
Z5.573.5556.0	ST 72.1 /16 REV U WR	679
Z5.573.5656.0	ST 72.1 / 6 REV U WR	679
Z5.573.5756.0	ST 72.1 /10 REV U WR	679
Z5.573.5856.0	ST 72.1 /24 REV U WR	679
Z5.573.6056.0	ST 70.1 /16 RV U WL	675
Z5.573.6156.0	ST 70.1 / 6 RV U WL	675
Z5.573.6256.0	ST 70.1 /10 RV U WL	675
Z5.573.6356.0	ST 70.1 /24 RV U WL	675
Z5.573.6556.0	ST 72.1 /16 RV U WL	679
Z5.573.6656.0	ST 72.1 / 6 RV U WL	679
Z5.573.6756.0	ST 72.1 /10 RV U WL	679
Z5.573.6856.0	ST 72.1 /24 RV U WL	679
Z5.573.7056.0	ST 70.1 /16 RV U WR	675
Z5.573.7156.0	ST 70.1 / 6 RV U WR	675
Z5.573.7256.0	ST 70.1 /10 RV U WR	675
Z5.573.7356.0	ST 70.1 /24 RV U WR	675
Z5.573.7556.0	ST 72.1 /16 RV U WR	679
Z5.573.7656.0	ST 72.1 / 6 RV U WR	679
Z5.573.7756.0	ST 72.1 /10 RV U WR	679
Z5.573.7856.0	ST 72.1 /24 RV U WR	679
Z5.573.8056.0	ST 73.1 /40 REV WL	683
Z5.573.8156.0	ST 73.1 /64 REV WL	683
Z5.573.8356.0	ST 73.1 /40 REV WR	683
Z5.573.8456.0	ST 73.1 /64 REV WR	683
Z5.573.8656.0	ST 73.1 /40 RV WL	683
Z5.573.8756.0	ST 73.1 /64 RV WL	683
Z5.573.8956.0	ST 73.1 /40 RV WR	683
Z5.573.9056.0	ST 73.1 /64 RV WR	683
Z5.573.9156.0	ST 73.1 /40 REV U WL	683
Z5.573.9256.0	ST 73.1 /64 REV U WL	683
Z5.573.9356.0	ST 73.1 /40 REV U WR	683
Z5.573.9456.0	ST 73.1 /64 REV U WR	683
Z5.573.9556.0	ST 73.1 /40 RV U WL	683
Z5.573.9656.0	ST 73.1 /64 RV U WL	683
Z5.573.9756.0	ST 73.1 /40 RV U WR	683
Z5.573.9856.0	ST 73.1 /64 RV U WR	683
Z5.574.0053.0	6/10/16 Gehaeuse-UT	782
Z5.574.0153.0	24 Gehaeuse-UT	782
Z5.574.0653.0	HALTERAHMEN 6	782
Z5.574.1053.0	HALTERAHMEN 10	782
Z5.574.1253.0	HALTERAHMEN 2x6	782
Z5.574.1653.0	HALTERAHMEN 16	782
Z5.574.2453.0	HALTERAHMEN 24	782
Z5.580.7800.0	M-IAC 24	482
Z5.580.8100.0	M-IDC 24	482
Z5.592.1252.0	SPERRSTUECK	788
Z5.593.4053.0	CODIERSATZ	788
Z5.595.2153.0	TR.-STUECK F.TS35	584
Z5.599.9025.0	LP.STIFTLEISTE	320
Z6.012.0812.0	SCHRAUBENSATZ	305
Z7.210.1027.0	2072 M	164
Z7.210.3027.0	9215 M-70	164
Z7.210.3227.0	9215 - 2	114
Z7.210.3327.0	9215 - 3	114
Z7.210.3427.0	9215 - 4	164
Z7.210.3527.0	9215 - 5	164
Z7.210.3627.0	9215 - 6	114
Z7.211.0027.0	9703 / 6 M-70	72
Z7.211.0227.0	9703 / 6- 2	72
Z7.211.0327.0	9703 / 6- 3	86
Z7.211.0427.0	9703 / 6- 4	86
Z7.211.0527.0	9703 / 6- 5	86
Z7.211.0627.0	9703 / 6- 6	72
Z7.212.0027.0	9703 / 8 M-50	196
Z7.212.0227.0	9703 / 8- 2	191
Z7.212.0327.0	9703 / 8- 3	191
Z7.212.0427.0	9703 / 8- 4	191
Z7.212.0527.0	9703 / 8- 5	191
Z7.212.0627.0	9703 / 8- 6	191
Z7.212.1227.0		148
Z7.212.1327.0		148
Z7.212.1427.0		148
Z7.212.1527.0		148
Z7.212.2027.0		148
Z7.212.2227.0		148
Z7.212.2327.0		148
Z7.212.2427.0		148
Z7.213.0027.0	9703 / 12 M	196
Z7.213.0227.0	9703 / 12- 2	191
Z7.213.0327.0	9703 / 12- 3	191
Z7.213.0427.0	9703 / 12- 4	191
Z7.213.0527.0	9703 / 12- 5	191
Z7.213.0627.0	9703 / 12- 6	191
Z7.214.0027.0	9703 / 10 M	196
Z7.214.0227.0	9703 / 10- 2	189
Z7.214.0327.0	9703 / 10- 3	191
Z7.214.0427.0	9703 / 10- 4	191
Z7.214.0527.0	9703 / 10- 5	191
Z7.214.0627.0	9703 / 10- 6	191
Z7.215.0027.0	9703 / 5 M	190
Z7.215.0227.0	9703 / 5- 2	189
Z7.215.0327.0	9703 / 5- 3	190
Z7.215.0427.0	9703 / 5- 4	190
Z7.215.0527.0	9703 / 5- 5	190
Z7.215.0627.0	9703 / 5- 6	190
Z7.215.4027.0	VB WKM 2,5 / 15 M-60	164
Z7.215.4227.0	VB WKM 2,5 / 15 - 2	164
Z7.215.4327.0	VB WKM 2,5 / 15 - 3	164
Z7.215.4427.0	VB WKM 2,5 / 15 - 4	164
Z7.215.4527.0	VB WKM 2,5 / 15 - 5	164
Z7.215.4627.0	VB WKM 2,5 / 15 - 6	164

contents

Part no.	Type	section / page
Z7.216.0027.0	9703 / 16 M	196
Z7.216.0227.0	9703 / 16- 2	189
Z7.216.0327.0	9703 / 16- 3	192
Z7.216.0427.0	9703 / 16- 4	192
Z7.216.0527.0	9703 / 16- 5	192
Z7.216.0627.0	9703 / 16- 6	192
Z7.220.0227.0	2072 / 2	141
Z7.220.0327.0	2072 / 3	164
Z7.220.0427.0	2072 / 4	164
Z7.220.0527.0	2072 / 5	164
Z7.220.0627.0	2072 / 6	141
Z7.255.0227.0	IVB 0,5 WK4.. - 2	86
Z7.255.0327.0	IVB 0,5 WK4.. - 3	86
Z7.255.0427.0	IVB 0,5 WK4.. - 4	86
Z7.255.0527.0	IVB 0,5 WK4.. - 5	86
Z7.255.0627.0	IVB 0,5 WK4.. - 6	86
Z7.255.0727.0	IVB 0,5 WK4.. - 7	86
Z7.255.0827.0	IVB 0,5 WK4.. - 8	86
Z7.255.0927.0	IVB 0,5 WK4.. - 9	86
Z7.255.1027.0	IVB 0,5 WK4.. - 10	86
Z7.255.1127.0	IVB 0,5 WK4.. - 11	86
Z7.255.1227.0	IVB 0,5 WK4.. - 12	86
Z7.255.2227.0	IVB WK4 E - 2	114
Z7.255.2327.0	IVB WK4 E - 3	160
Z7.255.2427.0	IVB WK4 E - 4	160
Z7.255.2527.0	IVB WK4 E - 5	160
Z7.255.2627.0	IVB WK4 E - 6	114
Z7.255.2727.0	IVB WK4 E - 7	160
Z7.255.2827.0	IVB WK4 E - 8	160
Z7.255.2927.0	IVB WK4 E - 9	160
Z7.255.3027.0	IVB WK4 E - 10	160
Z7.255.3127.0	IVB WK4 E - 11	160
Z7.255.3227.0	IVB WK4 E - 12	160
Z7.255.4227.0	IVB 1 WK4.. - 2	86
Z7.255.4327.0	IVB 1 WK4.. - 3	86
Z7.255.4427.0	IVB 1 WK4.. - 4	86
Z7.255.4527.0	IVB 1 WK4.. - 5	86
Z7.255.4627.0	IVB 1 WK4.. - 6	86
Z7.255.4727.0	IVB 1 WK4.. - 7	86
Z7.255.4827.0	IVB 1 WK4.. - 8	86
Z7.255.4927.0	IVB 1 WK4.. - 9	86
Z7.255.5027.0	IVB 1 WK4.. - 10	86
Z7.255.5127.0	IVB 1 WK4.. - 11	86
Z7.255.5227.0	IVB 1 WK4.. - 12	86
Z7.256.0227.0	FUER 70ER KLEMMENADAPT.	781
Z7.256.0327.0	FUER 70ER KLEMMENADAPT.	781
Z7.256.0427.0	FUER 70ER KLEMMENADAPT.	781
Z7.256.0527.0	FUER 70ER KLEMMENADAPT.	781
Z7.256.0627.0	FUER 70ER KLEMMENADAPT.	781
Z7.256.0727.0	FUER 70ER KLEMMENADAPT.	781
Z7.256.0827.0	FUER 70ER KLEMMENADAPT.	781
Z7.256.0927.0	FUER 70ER KLEMMENADAPT.	781
Z7.256.1027.0	FUER 70ER KLEMMENADAPT.	781
Z7.256.1127.0	FUER 70ER KLEMMENADAPT.	781
Z7.256.1227.0	FUER 70ER KLEMMENADAPT.	781
Z7.256.2227.0	IVK WK 4/DEU- 2	112
Z7.256.2627.0	IVK WK 4/DEU- 6	112
Z7.256.4227.0	IVBS WK4 E - 2	114
Z7.256.4327.0	IVBS WK4 E - 3	160
Z7.256.4427.0	IVBS WK4 E - 4	160
Z7.256.4527.0	IVBS WK4 E - 5	160
Z7.256.4627.0	IVBS WK4 E - 6	114
Z7.256.4727.0	IVBS WK4 E - 7	160
Z7.256.4827.0	IVBS WK4 E - 8	160
Z7.256.4927.0	IVBS WK4 E - 9	160
Z7.256.5027.0	IVBS WK4 E - 10	160
Z7.256.5127.0	IVBS WK4 E - 11	160
Z7.256.5227.0	IVBS WK4 E - 12	160
Z7.258.0225.0	ISOL.VERB.ST.	204
Z7.258.0325.0	ISOL.VERB.ST.	204
Z7.258.1025.0	ISOL.VERB.ST.	204
Z7.258.1225.0	ISOL.VERB.KAMM	416
Z7.258.1225.0	ISOL.VERB.KAMM	781
Z7.258.1325.0	ISOL.VERB.KAMM	781
Z7.258.1425.0	ISOL.VERB.KAMM	781
Z7.258.1525.0	ISOL.VERB.KAMM	781
Z7.258.1625.0	ISOL.VERB.KAMM	781
Z7.258.1725.0	ISOL.VERB.KAMM	781
Z7.258.1825.0	ISOL.VERB.KAMM	781
Z7.258.1925.0	ISOL.VERB.KAMM	781
Z7.258.2025.0	ISOL.VERB.KAMM	781
Z7.260.0029.0		40
Z7.260.0229.0		40
Z7.260.0329.0		40
Z7.260.0429.0		40
Z7.260.0529.0		40
Z7.260.0629.0		40
Z7.260.0729.0		40
Z7.260.0829.0		40
Z7.260.0929.0		40
Z7.260.1029.0		40
Z7.261.1127.0		30
Z7.261.1227.0	IVBWKF 4 - 2	20
Z7.261.1327.0	IVBWKF 4 - 3	20
Z7.261.1427.0	IVBWKF 4 - 4	20

Part no.	Type	section / page
Z7.261.1527.0	IVBWKF 4 - 5	20
Z7.261.1627.0	IVBWKF 4 - 6	20
Z7.261.1727.0	IVBWKF 4 - 7	20
Z7.261.1827.0	IVBWKF 4 - 8	20
Z7.261.1927.0	IVBWKF 4 - 9	20
Z7.261.2027.0	IVBWKF 4 - 10	20
Z7.267.0027.5	IVB WK 2,5-K-M-70 ROT	160
Z7.267.0027.6	IVB WK 2,5-K-M-70 BLAU	160
Z7.267.0227.5	IVB WK 2,5-K- 2 ROT	118
Z7.267.0227.6	IVB WK 2,5-K- 2 BLAU	118
Z7.267.0327.5	IVB WK 2,5-K- 3 ROT	160
Z7.267.0327.6	IVB WK 2,5-K- 3 BLAU	160
Z7.267.0427.5	IVB WK 2,5-K- 4 ROT	160
Z7.267.0427.6	IVB WK 2,5-K- 4 BLAU	160
Z7.267.0527.5	IVB WK 2,5-K- 5 ROT	160
Z7.267.0527.6	IVB WK 2,5-K- 5 BLAU	160
Z7.267.0627.5	IVB WK 2,5-K 6 ROT	160
Z7.267.0627.6	IVB WK 2,5-K 6 BLAU	160
Z7.267.0727.5	IVB WK 2,5-K 7 ROT	160
Z7.267.0727.6	IVB WK 2,5-K 7 BLAU	160
Z7.267.0827.5	IVB WK 2,5-K- 8 ROT	160
Z7.267.0827.6	IVB WK 2,5-K- 8 BLAU	160
Z7.267.0927.5	IVB WK 2,5-K 9 ROT	160
Z7.267.0927.6	IVB WK 2,5-K 9 BLAU	160
Z7.267.1027.5	IVB WK 2,5-K- 10 ROT	160
Z7.267.1027.6	IVB WK 2,5-K- 10 BLAU	160
Z7.267.1127.5	IVB WK 2,5-K 11 ROT	160
Z7.267.1127.6	IVB WK 2,5-K 6 BLAU	160
Z7.267.1227.5	IVB WK 2,5-K- 12 ROT	118
Z7.267.1227.6	IVB WK 2,5-K- 12 BLAU	118
Z7.269.0523.0	9012 / 6	197
Z7.269.0623.0	9012 / 2.5 UB	161
Z7.269.0723.0	9012	197
Z7.269.2823.0	QUERSCHALTLASCHE	197
Z7.269.2923.0	QUERSCHALTLASCHE	161
Z7.269.3023.0	QUERSCHALTLASCHE	189
Z7.269.3123.0	QUERSCHALTLASCHE	191
Z7.269.3223.0	QUERSCHALTLASCHE	191
Z7.269.3423.0	QUERSCHALTLASCHE	192
Z7.269.3523.0	QUERSCHALTLASCHE	190
Z7.269.3623.0	QUERSCHALTLASCHE	161
Z7.269.4023.0	QUERSCHALTLASCHE	161
Z7.269.4123.0	QUERSCHALTLASCHE	161
Z7.269.4223.0	QUERSCHALTLASCHE	161
Z7.270.0027.0	IVB WK 2,5-3D- M-70	162
Z7.270.0227.0	IVB WK 2,5-3D- 2	118
Z7.270.0327.0	IVB WK 2,5-3D- 3	118
Z7.270.0427.0	IVB WK 2,5-3D- 4	162
Z7.270.0527.0	IVB WK 2,5-3D- 5	162
Z7.270.0627.0	IVB WK 2,5-3D- 6	162
Z7.270.0727.0	IVB WK 2,5-3D- 7	162
Z7.270.0827.0	IVB WK 2,5-3D- 8	162
Z7.270.0927.0	IVB WK 2,5-3D- 9	162
Z7.270.1027.0	IVB WK 2,5-3D- 10	162
Z7.270.1127.0	IVB WK 2,5-3D- 11	162
Z7.270.1227.0	IVB WK 2,5-3D- 12	118
Z7.271.0227.0	IVB WK 4/DEU- 2	113
Z7.271.0327.0	IVB WK 4/DEU- 3	113
Z7.271.0427.0	IVB WK 4/DEU- 4	162
Z7.271.0527.0	IVB WK 4/DEU- 5	162
Z7.271.0627.0	IVB WK 4/DEU- 6	162
Z7.271.0727.0	IVB WK 4/DEU- 7	162
Z7.271.0827.0	IVB WK 4/DEU- 8	162
Z7.271.0927.0	IVB WK 4/DEU- 9	162
Z7.271.1027.0	IVB WK 4/DEU-10	162
Z7.271.1127.0	IVB WK 4/DEU-11	162
Z7.271.1227.0	IVB WK 4/DEU-12	113
Z7.271.2227.0	IVB WK4 E/U- 2	145
Z7.271.2327.0	IVB WK4 E/U- 3	145
Z7.271.2427.0	IVB WK4 E/U- 4	162
Z7.271.2527.0	IVB WK4 E/U- 5	162
Z7.271.2627.0	IVB WK4 E/U- 6	162
Z7.271.2727.0	IVB WK4 E/U- 7	162
Z7.271.2827.0	IVB WK4 E/U- 8	162
Z7.271.2927.0	IVB WK4 E/U- 9	162
Z7.271.3027.0	IVB WK4 E/U-10	162
Z7.271.3127.0	IVB WK4 E/U-11	162
Z7.271.3227.0	IVB WK4 E/U-12	145
Z7.271.4227.0	IVB WKI4 - 2	139
Z7.271.4327.0	IVB WKI4 - 3	139
Z7.271.5227.0	IVB WKI4 -12	69
Z7.280.0027.0	VB WK 2,5 M-80	164
Z7.280.0227.0	VB WK 2,5 - 2	120
Z7.280.0327.0	VB WK 2,5 - 3	120
Z7.280.0427.0	VB WK 2,5 - 4	164
Z7.280.0527.0	VB WK 2,5 - 5	164
Z7.280.0627.0	VB WK 2,5 - 6	120
Z7.280.2227.0	IVBWK 2,5 - 2	102
Z7.280.2227.0	IVBWK 2,5 - 2	310
Z7.280.2327.0	IVBWK 2,5 - 3	102
Z7.280.2327.0	IVBWK 2,5 - 3	310
Z7.280.2427.0	IVBWK 2,5 - 4	162
Z7.280.2527.0	IVBWK 2,5 - 5	162
Z7.280.2627.0	IVBWK 2,5 - 6	162
Z7.280.2727.0	IVBWK 2,5 - 7	162

Part no.	Type	section / page
Z7.280.2827.0	IVBWK 2,5 - 8	162
Z7.280.2927.0	IVBWK 2,5 - 9	162
Z7.280.3027.0	IVBWK 2,5 -10	162
Z7.280.3127.0	IVBWK 2,5 -11	162
Z7.280.3227.0	IVBWK 2,5 -12	102
Z7.280.3227.0	IVBWK 2,5 -12	310
Z7.280.6227.0	IVBWKF 2,5 - 2	19
Z7.280.6227.0	IVBWKF 2,5 - 2	308
Z7.280.6327.0	IVBWKF 2,5 - 3	19
Z7.280.6327.0	IVBWKF 2,5 - 3	308
Z7.280.6427.0	IVBWKF 2,5 - 4	20
Z7.280.6427.0	IVBWKF 2,5 - 4	308
Z7.280.6527.0	IVBWKF 2,5 - 5	20
Z7.280.6527.0	IVBWKF 2,5 - 5	308
Z7.280.6627.0	IVBWKF 2,5 - 6	20
Z7.280.6627.0	IVBWKF 2,5 - 6	308
Z7.280.6727.0	IVBWKF 2,5 - 7	19
Z7.280.6727.0	IVBWKF 2,5 - 7	308
Z7.280.6827.0	IVBWKF 2,5 - 8	20
Z7.280.6827.0	IVBWKF 2,5 - 8	308
Z7.280.6927.0	IVBWKF 2,5 - 9	20
Z7.280.6927.0	IVBWKF 2,5 - 9	308
Z7.280.7027.0	IVBWKF 2,5 - 10	20
Z7.280.7027.0	IVBWKF 2,5 - 10	308
Z7.281.0027.0	VB WK 4 M-70	87
Z7.281.0227.0	VB WK 4 - 2	87
Z7.281.0327.0	VB WK 4 - 3	87
Z7.281.0427.0	VB WK 4 - 4	87
Z7.281.0527.0	VB WK 4 - 5	87
Z7.281.0627.0	VB WK 4 - 6	87
Z7.281.1227.0	IVBWK 4 - 2	78
Z7.281.1327.0	IVBWK 4 - 3	78
Z7.281.1427.0	IVBWK 4 - 4	78
Z7.281.1527.0	IVBWK 4 - 5	78
Z7.281.1627.0	IVBWK 4 - 6	78
Z7.281.1727.0	IVBWK 4 - 7	87
Z7.281.1827.0	IVBWK 4 - 8	87
Z7.281.1927.0	IVBWK 4 - 9	87
Z7.281.2027.0	IVBWK 4 -10	87
Z7.281.2127.0	IVBWK 4 -11	87
Z7.281.2227.0	IVBWK 4 -12	87
Z7.281.3027.0	VB WK/..S/IW/U-20	164
Z7.281.3227.0	VB WK/..S/IW/U- 2	140
Z7.281.3327.0	VB WK/..S/IW/U- 3	140
Z7.281.3427.0	VB WK/..S/IW/U- 4	164
Z7.281.3527.0	VB WK/..S/IW/U- 5	164
Z7.281.3627.0	VB WK/..S/IW/U- 6	140
Z7.281.6027.0	VB WK 4/D..M-70	164
Z7.281.6227.0	VB WK 4/D..-2	164
Z7.281.6327.0	VB WK 4/D..-3	164
Z7.281.6427.0	VB WK 4/D..-4	164
Z7.281.6527.0	VB WK 4/D..-5	164
Z7.281.6627.0	VB WK 4/D..-6	164
Z7.281.7227.0	IVB WK 4/D..- 2	112
Z7.281.7327.0	IVB WK 4/D..- 3	112
Z7.281.7427.0	IVB WK 4/D..- 4	162
Z7.281.7527.0	IVB WK 4/D..- 5	162
Z7.281.7627.0	IVB WK 4/D..- 6	162
Z7.281.7727.0	IVB WK 4/D..- 7	162
Z7.281.7827.0	IVB WK 4/D..- 8	162
Z7.281.7927.0	IVB WK 4/D..- 9	162
Z7.281.8027.0	IVB WK 4/D..-10	162
Z7.281.8127.0	IVB WK 4/D..-11	162
Z7.281.8227.0	IVB WK 4/D..-12	112
Z7.282.0027.0	VB WK 6 M-40	165
Z7.282.0227.0	VB WK 6 - 2	165
Z7.282.0327.0	VB WK 6 - 3	165
Z7.282.0427.0	VB WK 6 - 4	165
Z7.282.0527.0	VB WK 6 - 5	165
Z7.282.0627.0	VB WK 6 - 6	165
Z7.282.2227.0	IVBWK 6 - 2	103
Z7.282.2327.0	IVBWK 6 - 3	101
Z7.282.2427.0	IVBWK 6 - 4	163
Z7.282.2527.0	IVBWK 6 - 5	163
Z7.282.2627.0	IVBWK 6 - 6	163
Z7.282.2727.0	IVBWK 6 - 7	163
Z7.282.2827.0	IVBWK 6 - 8	163
Z7.282.2927.0	IVBWK 6 - 9	163
Z7.282.3027.0	IVBWK 6 -10	163
Z7.282.3127.0	IVBWK 6 -11	163
Z7.282.3227.0	IVBWK 6 -12	103
Z7.282.4227.0	IVBWKF 6- 2	21
Z7.283.2227.0	IVBWKN10 - 2	78
Z7.283.2327.0	IVBWKN10 - 3	78
Z7.283.2427.0	IVBWK 10 - 4	78
Z7.283.2527.0	IVBWKN10 - 5	78
Z7.283.2627.0	IVBWKN10 - 6	78
Z7.283.2727.0	IVBWKN10 - 7	163
Z7.283.2827.0	IVBWKN10 - 8	163
Z7.283.2927.0	IVBWKN10 - 9	163
Z7.283.3027.0	IVBWKN10 -10	163
Z7.283.3127.0	IVBWKN10 -11	163
Z7.283.3227.0	IVBWKN10 -12	103
Z7.283.6027.0	VBWKN 10 - M-40	165
Z7.283.6227.0	VBWKN 10 - 2	165

contents of
part number

contents PART NUMBER

Part no.	Type	section / page
Z7.283.6327.0	VBWKN 10 - 3	165
Z7.283.6427.0	VBWKN 10 - 4	165
Z7.283.6527.0	VBWKN 10 - 5	165
Z7.283.6627.0	VBWKN 10 - 6	165
Z7.283.8227.0	IVBWKF 10- 2	21
Z7.284.2027.0	IVBWKN16 - M-30	163
Z7.284.2227.0	IVBWKN16 - 2	104
Z7.284.2327.0	IVBWKN16 - 3	104
Z7.284.2427.0	IVBWKN16 - 4	163
Z7.284.2527.0	IVBWKN16 - 5	163
Z7.284.2627.0	IVBWKN16 - 6	163
Z7.284.2727.0	IVBWKN16 - 7	163
Z7.284.2827.0	IVBWKN16 - 8	163
Z7.284.2927.0	IVBWKN16 - 9	163
Z7.284.3027.0	IVBWKN16 -10	163
Z7.284.3127.0	IVBWKN16 -11	163
Z7.284.3227.0	IVBWKN16 -12	104
Z7.284.4227.0	IVBWKF 16- 2	21
Z7.284.6227.0	IVB WKIF 16-2	25
Z7.284.9227.0		79
Z7.284.9327.0		79
Z7.284.9427.0		79
Z7.284.9527.0		79
Z7.284.9627.0		79
Z7.285.2027.0	IVBWKN35 - M-20	163
Z7.285.2227.0	IVBWKN35 - 2	105
Z7.285.2327.0	IVBWKN35 - 3	105
Z7.285.2427.0	IVBWKN35 - 4	163
Z7.285.2527.0	IVBWKN35 - 5	163
Z7.285.2627.0	IVBWKN35 - 6	163
Z7.285.2727.0	IVBWKN35 - 7	163
Z7.285.2827.0	IVBWKN35 - 8	163
Z7.285.2927.0	IVBWKN35 - 9	163
Z7.285.3027.0	IVBWKN35 -10	163
Z7.285.3127.0	IVBWKN35 -11	163
Z7.285.3227.0	IVBWKN35 -12	105
Z7.285.4227.0	IVBWKI35 - 2	79
Z7.285.4327.0	IVBWKI35 - 3	79
Z7.285.4427.0	IVBWKI35 - 4	79
Z7.285.4527.0	IVBWKI35 - 5	79
Z7.285.4627.0	IVBWKI35 - 6	79
Z7.286.3227.0	VB WKN70 - 2	165
Z7.286.3327.0	VB WKN70 - 3	165
Z7.286.3427.0	VB WKN70 - 4	165
Z7.286.3527.0	VB WKN70 - 5	165
Z7.286.3627.0	VB WKN70 - 6	165
Z7.287.0027.0	VB WK 10 / SI M-30	165
Z7.287.0227.0	VB WK 10 / SI - 2	125
Z7.287.0327.0	VB WK 10 / SI - 3	125
Z7.287.0427.0	VB WK 10 / SI - 4	165
Z7.287.0527.0	VB WK 10 / SI - 5	165
Z7.287.0627.0	VB WK 10 / SI - 6	125
Z7.287.1227.0	VBWKN150 - 2	165
Z7.287.1327.0	VBWKN150 - 3	165
Z7.288.0027.0	VB WKI 10 M-40	87
Z7.288.0227.0	VB WKI 10 - 2	87
Z7.288.0327.0	VB WKI 10 - 3	87
Z7.288.0427.0	VB WKI 10 - 4	87
Z7.288.0527.0	VB WKI 10 - 5	87
Z7.288.0627.0	VB WKI 10 - 6	87
Z7.289.0027.0	VB WKI 16 M-20	87
Z7.289.0227.0	VB WKI 16 - 2	87
Z7.289.0327.0	VB WKI 16 - 3	69
Z7.289.0427.0	VB WKI 16 - 4	87
Z7.289.0527.0	VB WKI 16 - 5	87
Z7.289.0627.0	VB WKI 16 - 6	87
Z7.311.1753.0		167
Z7.311.2753.0	KL.LST.BEZ. TS15	167
Z7.409.5753.0	ABDECKUNG	156
Z7.409.5853.0	ABDECKUNG	158
Z7.409.7056.0	SCHUTZDECKEL	780
Z7.409.7156.0	SCHUTZDECKEL	780
Z7.409.7256.0	SCHUTZDECKEL	780
Z7.409.7356.0	SCHUTZDECKEL	780
Z7.409.8856.0	SCHUTZDECKEL	780
Z7.409.8956.0	SCHUTZDECKEL	780
Z7.415.0010.0	1X 9P BUCHSE LOET	756
Z7.415.0110.0	2X 9P BUCHSE LOET	756
Z7.415.0235.0	1X 9P STECKER LOET	756
Z7.415.0335.0	2X 9P STECKER LOET	756
Z7.415.0810.0	1X15P BUCHSE LOET	756
Z7.415.0910.0	2X15P BUCHSE LOET	756
Z7.415.1035.0	1X15P STECKER LOET	756
Z7.415.1135.0	2X15P STECKER LOET	756
Z7.415.1610.0	1X25P BUCHSE LOET	756
Z7.415.1710.0	2X25P BUCHSE LOET	756
Z7.415.1810.0	1X25+1X15P BUCHSE LOET	756
Z7.415.1935.0	1X25P STECKER LOET	756
Z7.415.2035.0	2X25P STECKER LOET	756
Z7.415.2135.0	1X25+1X15P STECKER LOET	756
Z7.415.2410.0	1X37P BUCHSE LOET	756
Z7.415.2510.0	2X37P BUCHSE LOET	756
Z7.415.2635.0	1X37P STECKER LOET	756
Z7.415.2735.0	2X37P STECKER LOET	756
Z7.415.3210.0	1X50P BUCHSE LOET	756
Z7.415.3335.0	1X50P STECKER LOET	756
Z7.415.3410.0	2X50P BUCHSE LOET	756
Z7.415.3535.0	2X50P STECKER LOET	756
Z7.416.1656.0	DECKEL	780
Z7.416.1756.0	DECKEL	780
Z7.416.1856.0	DECKEL	780
Z7.419.6128.0	DECKEL M.VERRIEG.	780
Z7.419.6228.0	DECKEL	780
Z8.000.0035.5	24 VDC 2W	455
Z8.000.0056.9	24 VDC 1W	454
Z8.000.0103.4	KB 1 RM 5.08	460
Z8.000.0123.1	B EXP.BOARD WEG 6 POL	592
Z8.000.0156.9	OAC 3-32V/24-280V	482
Z8.000.0169.8	ODC 3-32V/3-60V	482
Z8.000.0169.9	ODC 3-32V/3-200V	482
Z8.000.0176.2	110 VDC 2W	458
Z8.000.0181.0	110 VDC 1W	456
Z8.000.0200.8	VBRM3.3	442
Z8.000.0202.1	EKAP ROT	442
Z8.000.0202.2	EKAP BLAU	442
Z8.000.0202.3	VBK6.2 ROT	442
Z8.000.0202.4	VBK6.2 BLAU	442
Z8.000.0229.5	DIPOS JB 4,3	499

contents

Part no.	Type	section / page	Part no.	Type	section / page	Part no.	Type	section / page

notice

notice

notice

notice

wieland

Electrical
Connections

USA
Wieland Electric Inc.
49 International Road
Burgaw, NC 28425
Phone: (910) 259-5050
Fax: (910) 259-3691
e-mail: sales@wielandinc.com

Canada
Wieland Electric Inc.
2889 Brighton Road
Oakville, Ontario L6H 6C9
Phone: (905) 829-8414
Fax: (905) 829-8413
e-mail: oakville@wielandinc.com

On the Internet:
www.wielandinc.com

Toll Free 1-800-wieland

Product Range

DIN rail terminal blocks
- with screw connection
- with spring connection
- with IDC connection

Terminal blocks for electrical installations
- with screw connection
- with spring connection

Lighting and appliance terminals
Terminal strips

PC board connectors
- modular/pluggable
- insulated headers
- rising cage clamp/ plug connectors
- TOP connection
- Spring connection
- electronics housings

Electronics components
- relay modules
- solid-state modules
- interface modules
- function modules
- Power Supplies

Fieldbus components
- motor starter
- power bus
- distributed I/Os

Systems for electrical installation
- Mains connectors
- Bus connectors
- Compact connectors
- Low voltage connectors
- Flat cable systems
- Distribution systems
- EIB switching devices

Multipole connectors
Multipole adapter
EExi
Data cablefeed-through
Connectors with mixed contacts