NOTES
1. FOCAL LENGTH =31.8mm
2. PRODUCT SPECIFICATION: PS-35842-001
3. APPLICABLE BULB CAP: P21/5W(BAY15d) (C)
4. MATES WITH

NO.	DESCRIPTION	MATERIAL	ORDER NO.	REMARK
③	POSITIVE TERMINAL	PHOSPHOR BRONZE	35464-8000	UNPLATED
④	POSITIVER WIRE SEAL	SILICONE	35903-0096	BROWN
⑤	EARTH TERMINAL	PHOSPHOR BRONZE	35465-8000	UNPLATED
⑥	EARTH WIRE SEAL	SILICONE	35903-0106	BLUE

<PART LIST>

NO.	DESCRIPTION	MATERIAL	USAGE	REMARK
①	DOUBLE SOCKET	PA66 M/F	1	B TYPE
②	SEAL GASKET	NBR	1	BLACK

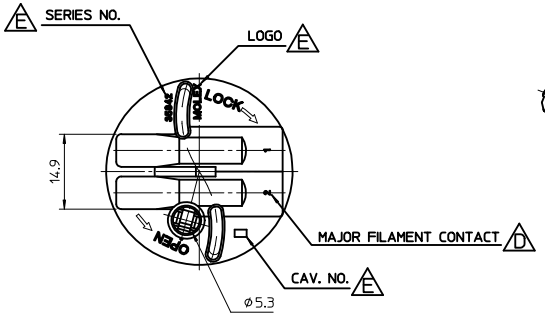

VIEW 'A'

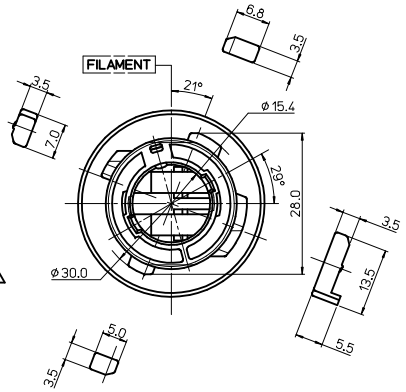

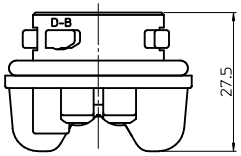

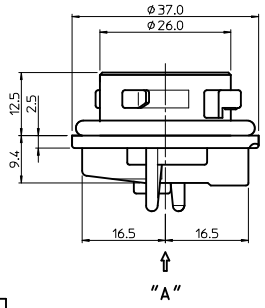

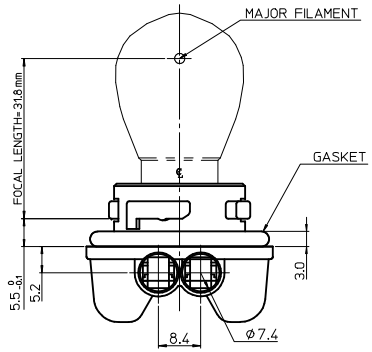

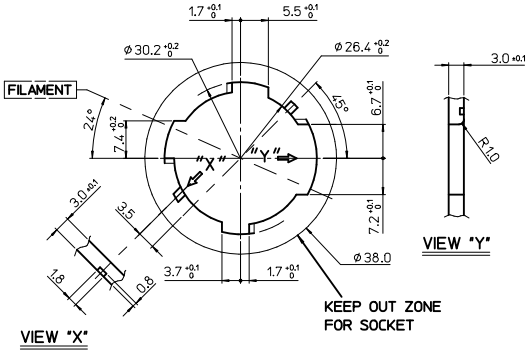

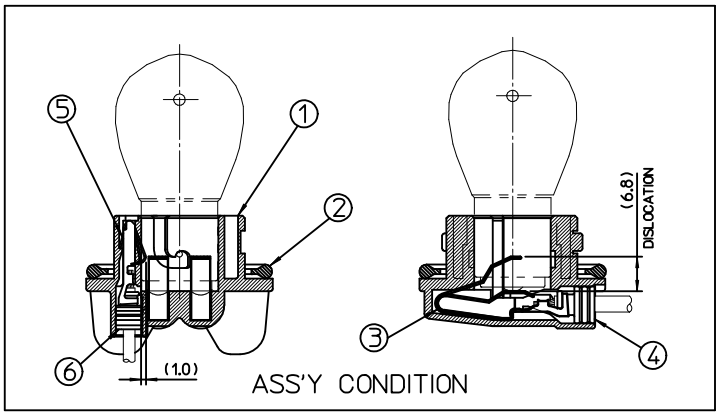

ASS'Y CONDITION

<TABLE 1>

MATERIAL NO.	ORDER NO.	COLOR
358421315	35842-1315	GRAY
358421316	35842-1316	WHITE
358421317	35842-1317	BROWN

MOUNTING INTERFACE
(MI-1)

REVISED		
EC NO: KOR2010-0146		
DRWN:EOKIM	2010/04/05	
CH'KD:WYYANG	2010/04/05	
APPR:YUNSIKKIM	2010/04/06	
E	REV	DESCRIPTION

QUALITY SYMBOLS: ▼=0, (C)=0

GENERAL TOLERANCES (UNLESS SPECIFIED)

	mm	INCH
4 PLACES	± ---	± ---
3 PLACES	± ---	± ---
2 PLACES	± 0.15	± ---
1 PLACE	± 0.25	± ---
ANGULAR ± 2 °		

DRAFT WHERE APPLICABLE MUST REMAIN WITHIN DIMENSIONS

DIMENSION STYLE: MM ONLY
SCALE: 1:1
DESIGN UNITS: METRIC
THIRD ANGLE PROJECTION

DRAWN BY: YSIKKIM	DATE: 1999/06/08	TITLE: SEALED PT BULB SOCKET DOUBLE HOUSING ASS'Y (B-TYPE)
CHECKED BY: BKCHOI	DATE: 1999/06/09	
APPROVED BY: CWLEE	DATE: 1999/06/09	molex MOLEX INCORPORATED
MATERIAL NO.: SEE TABLE 1		DOCUMENT NO.: SD-35842-002
SIZE: A3		SHEET NO.: 1 OF 1

THIS DRAWING CONTAINS INFORMATION THAT IS PROPRIETARY TO MOLEX INCORPORATED AND SHOULD NOT BE USED WITHOUT WRITTEN PERMISSION