1. Scope

This specification applies to fixed metal film chip resistors rectangular type rated dissipation of 0.1 W.

2. Type Designation

RR	1220	P	–	102	–	B	–	M	–	T5
(1)	(2)	(3)		(4)		(5)		(6)		(7)

(1)Product Type

R R	fixed metal film chip resistors rectangular type

(2)Size

1 2 2 0	1.25×2.0mm

(3) Temperature coefficient of resistance

P	±25ppm/deg C
Q	±50ppm/deg C
R	±100ppm/deg C

(4) Rated resistance

E24 series	Three digits of number	Example : 103 = 10×10^3 = 10kΩ
E96 series	Four digits of number	Example : 4992 = 499×10^2 = 49.9kΩ 49R9 = 49.9Ω

(5)Tolerance on rated resistance

D	±0.5%
B	±0.1%

(6)Identification code of four digit marking

M	The code when four digits code is marked on the resistor.

(7)Quantity in taping

T 5	5,000pcs/reel
Only for ±0.1% products	

3. Physical Dimensions and Construction

Physical dimensions

See Fig.1.

4. Ratings

4.1 Rated resistance, Tolerance on rated resistance and Temperature coefficient of resistance

(1) Rated resistance	E24 series	100 to 1MΩ
	E96 series	100 to 1MΩ
(2) Tolerance on rated resistance		±0.1% (Code : B)
(3) Temperature coefficient of resistance		±25ppm/deg C (Code : P)

The resistance value duplicated in E24 series and in E96 series shall be manufactured in E24 series only.

REV	CHANG.NO	NOTE.	DATE	DRAWN	APPD
			/ /		
			/ /		
			/ /		
			/ /		
			/ /		
0			/ /		

APPD T.Komatsu 2001/8/3
CHKD T.Komatsu 2001/8/3
DRAWN J.Tashiro 2001/08/03

SSM

SUSUMU CO.,LTD

TITLE: Specification for Chip resistor RR1220 series

SPEC.NO: RR00-1097

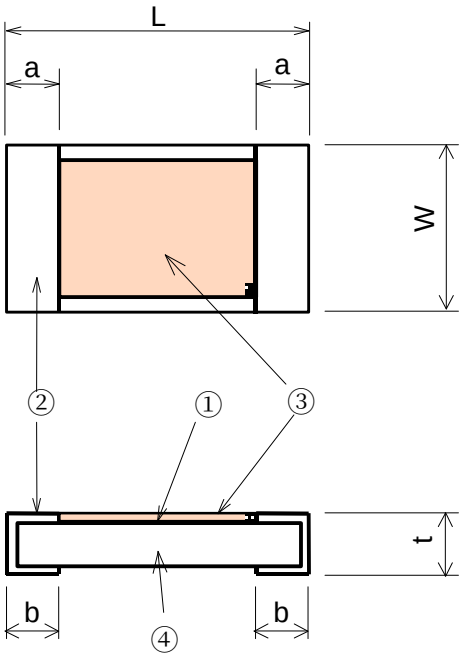

（Unit ）mm

Code letter	Dimension
L	2.0±0.2
W	1.25±0.2
t	0.4±0.1
a	0.4±0.2
b	0.4±0.2

Fig.1 Construction and dimensions

NOTE :

① Resistive element	Nichrome alloy thin film
② Electrode	Sn-Pb plating or Tin plating
③ Protective coat	Polyimid resin coating
④ Substrate	Alumina ceramic

4.2 Rated dissipation at 70deg C

0.1W [JIS Code 2A]

Rated dissipation is based on continuous full load operation at rated ambient temperature of 70deg C. For resistors operated at ambient temperature in excess of 70deg C, the maximum load shall be derated in accordance with the following curve.

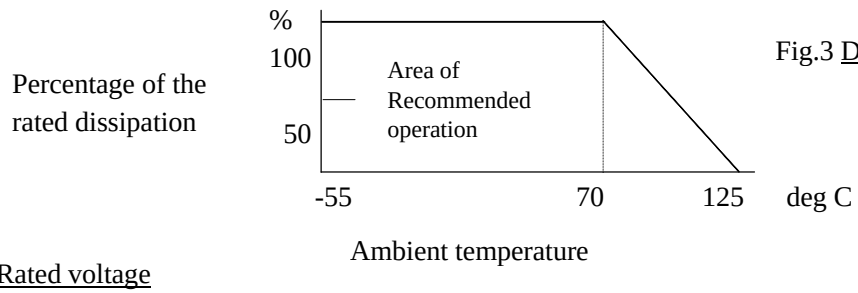

Fig.3 Derating curve

4.3 Rated voltage

The d.c. or a.c. r.m.s voltage shall be calculated from the following expression.

When the rated voltage exceeds the limiting element voltage, the limiting element voltage shall be the rated voltage.

$E=\sqrt{R\times P}$ Where E : Rated voltage (V)
R : Rated resistance (Ω)
P : Rated dissipation (W)

4.4 Limiting element voltage	100 V
4.5 Maximum overload voltage	200 V
4.6 Operating temperature range	-55 to +125 deg C
4.7 Storage temperature range	-55 to +125 deg C

5. Marking

5.1 Marking in E24 series

A rated resistance shall be marked on the protect coating with three digit of number.

See para.2. (3)

(Example) 3.9kΩ→39 00→ 392

5.2 Marking in E96 series

A manufacturing date code or four digit of number shall be marked on the protect coating.

(1) A manufacturing date code

Refer to JIS C 5201-1 Annex 1 Table5

(2) Four digit of number

See para.2. (3)

(Example) 49.9kΩ→499 00→ 4992

6. Performance

The test method shall be as specified in IEC 60115-1.

Standard atmospheric conditions

Unless otherwise specified, the standard range of atmospheric conditions for making measurements tests is as follows;

Temperature	5 to 35deg C
Relative humidity	45 to 85%RH
Air pressure	86 to 106kPa

If there is any doubt about results, measurements shall be made within the following limits;

Temperature	20±2deg C
Relative humidity	60 to 70%RH
Air pressure	86 to 106kPa

6.1 Electrical

6.1.1 Resistance and tolerance

Method;

Refer to IEC 60115-1, Sub-clause 4.5.

Specification:

Not exceed the specified tolerance on rated resistance in para.4.1.(2).

6.1.2 Temperature characteristic of resistance

Method;

Resistance shall be measured under standard atmospheric conditions.

When the temperature reaches and is maintained at 100 deg C higher than the temperature of standard atmospheric conditions, resistance shall be measured again. The measurement shall be made after a period of 30 min, after each specified temperature is reached.

Specification:

Not exceed the specified temperature coefficient of resistance in para.4.1.(3).

6.1.3 Overload

Method;

A d.c. or a.c. r.m.s. voltage of 2.5 times the rated voltage shall be applied for 5 sec, and a check shall be made to see if arcing or other damage happened. Then the resistor shall be maintained without electrical load for 30 min after which the resistance shall be measured. However the applied voltage shall not exceed the maximum overload voltage.

For other procedures, refer to IEC 60115-1, Sub-clause 4.13.

Specification:

Change in resistance : ±(0.5%+0.05Ω)

Without damage by flash over (spark, arcing), burning or breakdown etc.

6.1.4 Insulation resistance

Method;

Place the specimen on the groove of metal plate so that the edge of metal block positions almost center of both electrodes, with the surface of insulation enclosure located downward or upward and pressurize the block by a force of 1.0±0.2 N.

The test voltage shall be 100±15Vd.c., and maintain this voltage for about 1 min. The insulation resistance shall then be measured while applying the voltage.

For other procedures, refer to IEC 60115-1, Sub-clause 4.6.

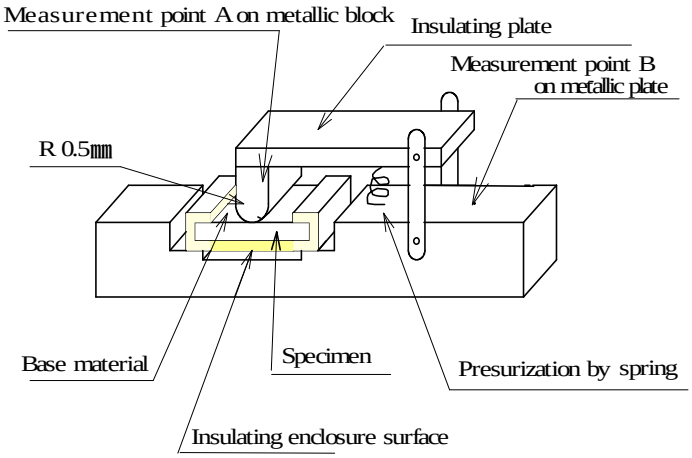

Specification;

(1)Between electrodes and insulating enclosure. 100MΩ or more

(2)Between electrodes and base material. 1000MΩ or more

6.1.5 Voltage proof

Method;

The resistor shall be tested as shown in paragraph 6.1.4.

The test voltage shall be a voltage of 200V (a.c. r.m.s.) between both electrode.

The voltage is gradually increased at a rate of about 100 V/s. from almost 0 V to the specified voltage and maintained as it is for 60s. +10/0s., then gradually decreased to almost 0 V.

For other procedures, refer to IEC 60115-1, Sub-clause 4.7.

Specification;

Change in resistance : ±(0.5%+0.05Ω)

Without damage by flash over (spark, arcing), burning or breakdown etc.

6.2 Mechanical

6.2.1 Substrate bending test (Bond strength of the face plating)

Method;

Apply pressure in the direction of the arrow at a rate of about 0.5 mm/s. until bent width reaches 3 mm and hold for 30 s.

Mounted state

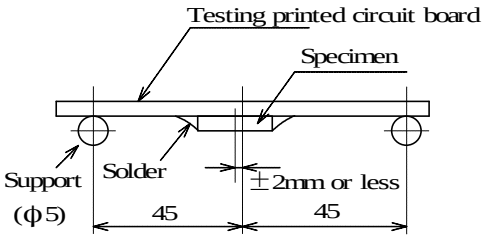

(Unit：mm)

Test state

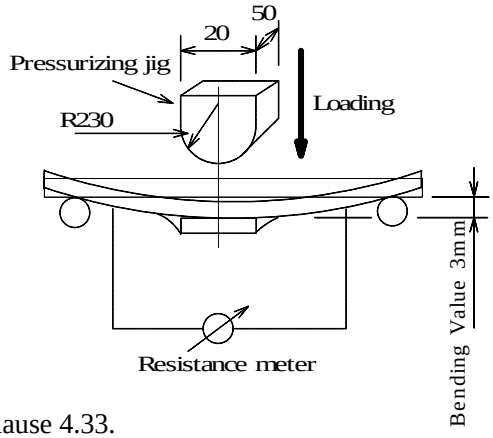

For other procedures, refer to IEC 60115-1, Sub-clause 4.33.

Specification;

Change in resistance : ±(0.5%+0.05Ω)

Without mechanical damage such as breaks.

6.2.2 Body strength

Method;

A load of 10 N {1.02kgf} using a R0.5 pressure rod shall be applied to the center in the direction of arrow and held for 10 s.

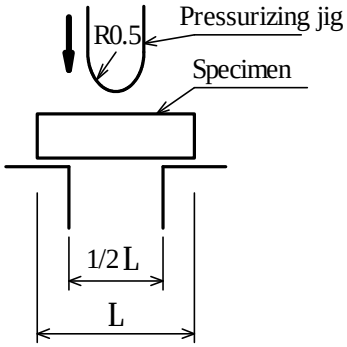

Specification;

Change in resistance : ±(0.5%+0.05Ω)

Without mechanical damage such as breaks.

6.2.3 Resistance to soldering heat

Method;

(1) Solder bath method

Preheat	100～110deg C	30 s.
Temperature	270±5deg C	10±1 s.

(2) Reflow soldering method

Peak temperature	260±5deg C	10 sec. or less
Temperature	220deg C over	60 s. max.

The heating apparatus shall be the upper-heated oven and the temperature shall be board surface temperature.

(3) Soldering iron method

Bit temperature	350±5deg C
Time	3 +1／0 s.

The resistor shall be stored at standard atmospheric conditions for 1 hr after which the measurements shall be made.

For other procedures, refer to IEC 60115-1, Sub-clause 4.18.

Specification:

Change in resistance : ±(0.5%+0.05Ω)

Without mechanical damage.

Electrical characteristics shall be satisfied.

6.2.4 Solderability

Method;

Temperature of solder	235±5deg C	(Solder alloy: Sn-37Pb)
	245±5deg C	(Solder alloy: Sn-3Ag-0.5Cu)
Duration of immersion	2±0.5 s.	

For other procedures, refer to IEC 60115-1, Sub-clause 4.17.

Specification:

A new uniform coating of solder shall cover minimum of 95% of the surface being immersed.

6.2.5 Solvent resistance

Method;

Immersion cleaning

At normal temperature : 300 sec. Using Isopropyl alcohol.

For other procedures, refer to IEC 60115-1, Sub-clause 4.29.

Specification:

Marking shall be legible.

Without mechanical damage and distinct damage in appearance.

6.3 Endurance

6.3.1 Rapid change of temperature

Method;

The resistor shall be subjected to 5 continuous cycles, each as shown in the figure below.

1	Minimum operating temperature± **3** deg C	30 min
2	Standard atmospheric conditions	2～3 min
3	Maximum operating temperature± **2** deg C	30 min
4	Standard atmospheric conditions	2～3 min

For other procedures, refer to IEC 60115-1, Sub-clause 4.19.

Specification;

Change in resistance : ±(0.5%+0.05Ω)

Without mechanical damage such as breaks and distinct damage in appearance.

Marking shall be legible.

6.3.2 Endurance (Damp heat with load)

Method;

The specimen shall be placed in the test chamber at a temperature 40±2deg C and a relative humidity 90 to 95 %, and then subjected to a voltage cycle consisting of rated d.c. voltage application of 1 hr 30 min and rest of 30 min repeatedly for 1000 +48/0 hrs.

However the applied voltage shall not exceed the limited element voltage.

For other procedures, refer to IEC 60115-1, Sub-clause 4.24.

Specification;

Change in resistance : ±(0.5%+0.05Ω)

Without mechanical damage such as breaks and distinct damage in appearance.

Marking shall be legible.

6.3.3 Endurance (rated load)

Method;

The specimen shall be placed in the test chamber at 70±2deg C, and then subjected to a voltage cycle consisting of rated d.c. voltage application of 1 hr 30 min and rest of 30 min repeatedly for 1000 +48/0 hrs.

However the applied voltage shall not exceed the limited element voltage.

For other procedures, refer to IEC 60115-1, Sub-clause 4.25.

Specification;

Change in resistance : ±(0.5%+0.05Ω)

Without mechanical damage such as breaks and distinct damage in appearance.

Marking shall be legible.

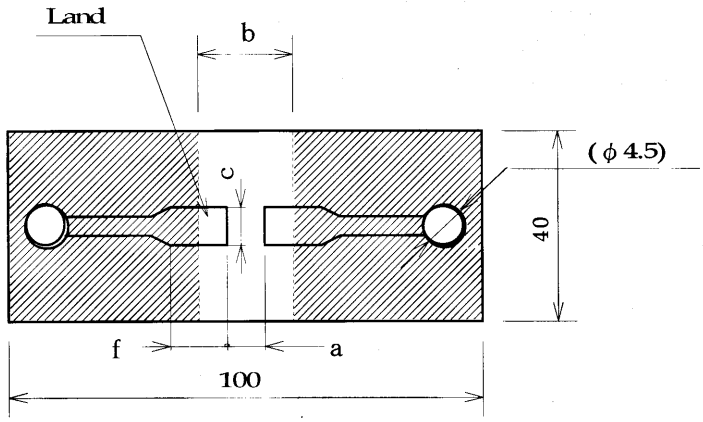

Code letter	Dimension (mm)
a	1.2
b	4.0
c	1.65
f	(3.0)

Unit : mm

Fig.4 Test board A

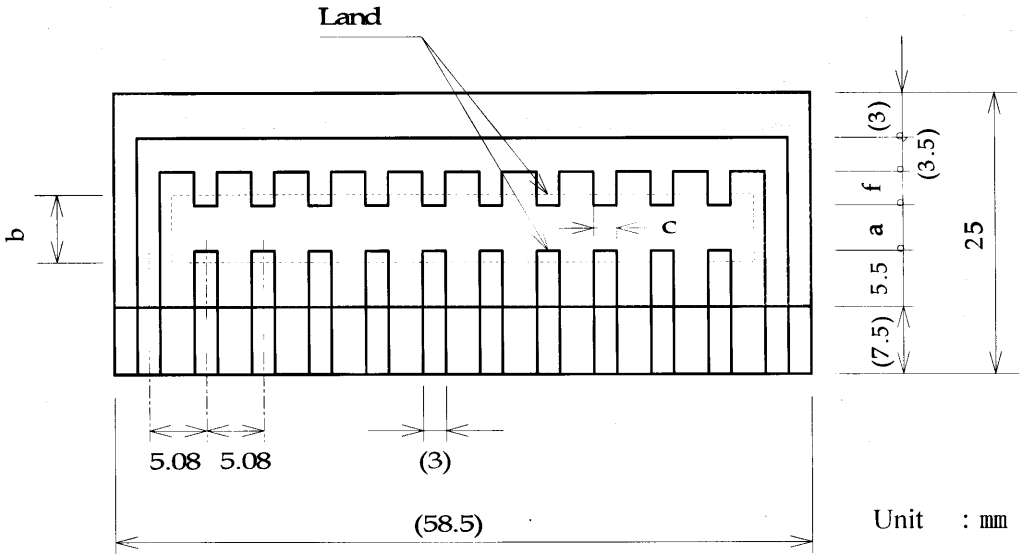

Unit : mm

Fig.5 Test board B

Code letter	Dimension (mm)
a	1.2
b	4.0
c	1.65
f	(4.3)

Test board

Test board A (For substrate banding, adhesion test, see Fig.4)

Material: Glass fabric base epoxy resin 1.6mm
Copper foil, thickness 0.035 mm
Solder resist coating

Test board B(For another test, see Fig.5)

Material: Glass fabric base epoxy resin 1.6mm
Copper foil, thickness 0.035 mm
Solder resist coating

Mounting method

(1) Mounting method according to solder bath method

Epoxy based adhesive agent shall be applied in the middle between the lands of the test board and the resistor shall be mounted in such a way that resistor's electrodes will be evenly placed in the land area and then the adhesive agent shall be hardened. Then a methanol medium of 25% colophony by specific weight is used as flux (if non-deviant test results are assurable over the counter colophony based flux may be used) and is soldered by dipping in a molten solder bath of 260±5 deg C and immersed for 3 to 5 s.

(2) Mounting method according to reflow soldering method

About 200 μm of solder cream is applied in the land portion of the test boards and the resistor shall be mounted in such a way so that the resistor's electrodes will be evenly placed on the land. It is soldered under the conditions of board surface temperature 240 to 250deg C(peak temperature) for 5 to 10 s. in an upper-portion heated oven.

7. Packaging

Resistors shall be in Taping.

7.1 Dimensions

7.1.1 Tape packaging dimensions

See Fig.6.

7.1.2 Reel dimensions

See Fig.7

7.2 Materials

Tape ：Paper
Reel ：Plastic

7.3 Specification of taping

Refer to clause 7.1 and IEC 60286-3.

7.4 Pieces per reel

1000 pieces per reel or 5000 pieces per reel. When a quantity is 5000 pieces per reel, code “-T5” shall be added at the end of type designation. See para.2.

7.5 Marking

The label indicated following items shall be marked on single side of the reel.

① Type designation
② Quantity
③ Manufacturing date code
(Month and year are marked. Refer to JIS C 5201-1 Annex 1 Table5.
④ Manufacturer's name
⑤ Country of origin
⑥ Shipping inspection code
⑦ Identification showing lead-free products.

Example of the label

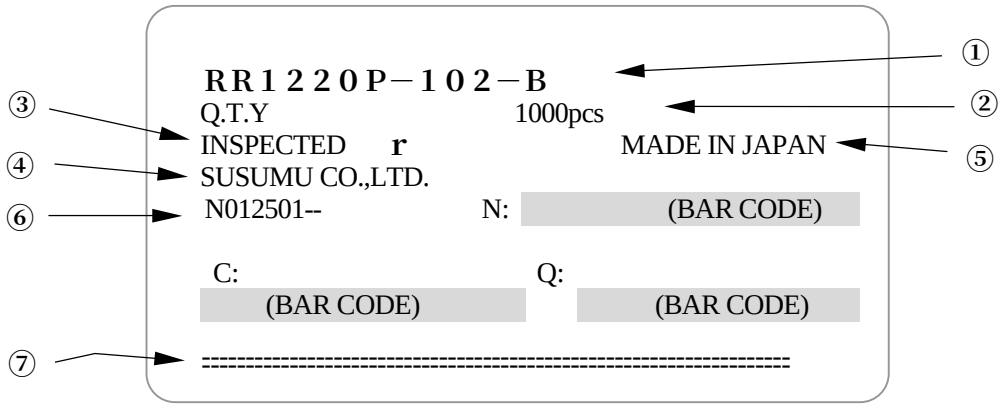

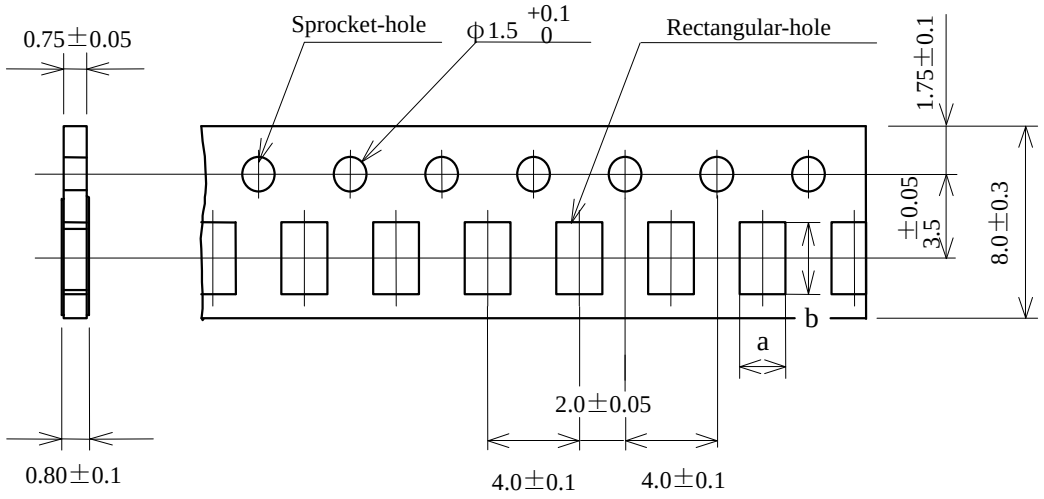

Fig.6 Dimensions of taping

※Pre-emptied holes : 75 holes(or 30 cm) or more.

Code letter	Dimension(mm)
a	1.65±0.2
b	2.4±0.2

Unit : mm

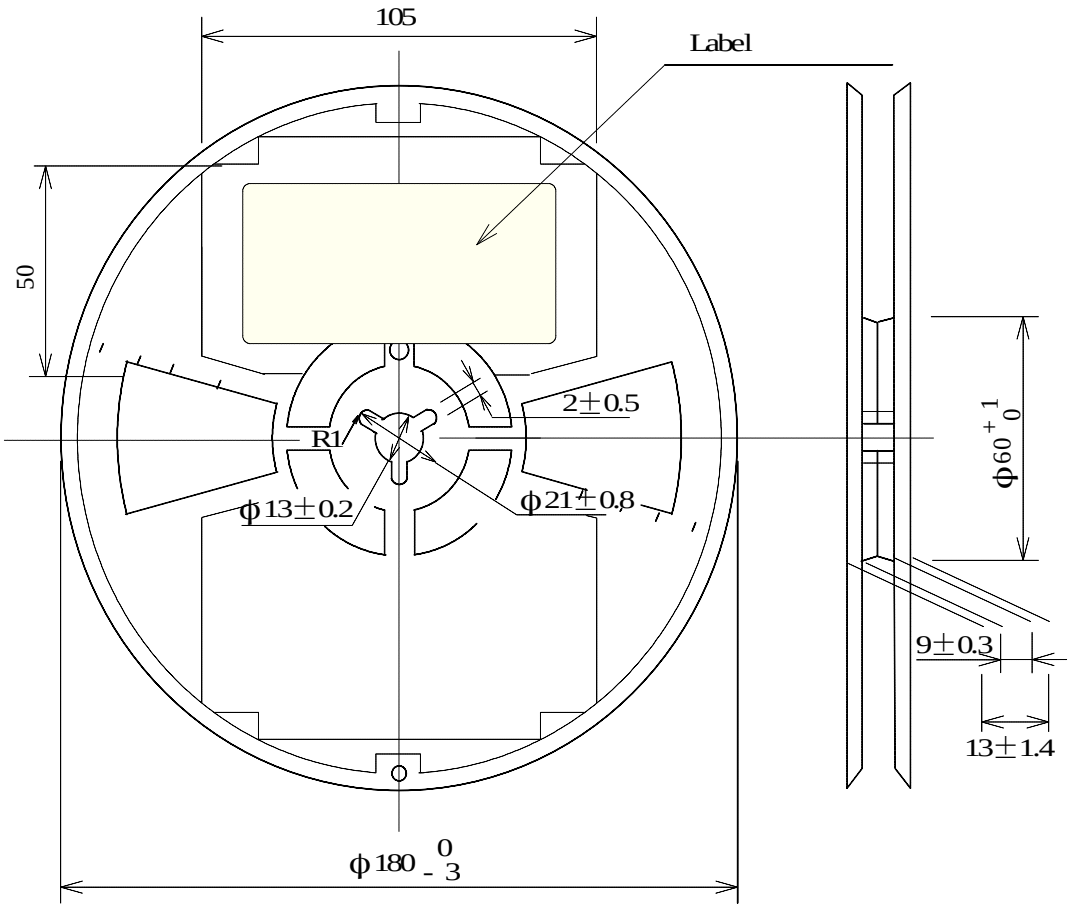

Where : Plastic sheet thickness shall be 0.5mm.

Fig.7. Dimensions of reel

8. Precautions in use

8.1 Storage

(1) Resistor shall be stored in a room where temperature and humidity must be controlled.
(temperature 5 to 35 deg C, humidity 45 to 85 % RH)
However, humidity keep it low, as it is possible.

(2) Resistor shall be stored as direct sunshine doesn't hit on it.

(3) Resistor shall be stored with no moisture, dust, a material that will make solderbility inferior, and a harmful gas (hydrogen chloride, sulfurous acid gas, and hydrogen sulfide).

(4) Resistor shall be stored with keeping the minimum package unit with uncivilized sealed (Keep the state of the taping).

8.2 Time limit to storage

(1) The storage time limit of the product is reckoned on the day when the product was shipped by our company and made within one year.

(2) Confirm solderbility beforehand when you use the one that the time limit was passed.

8.3 Chip mounting

(1) When chip are mounted on the PC board, the protection coat of resistors must not be scratched. If it will be scratched, it will make performance for moisture inferior.

(2) In case that resistor will be soldered by soldering iron, heating shall be done on the land, and soldering iron must not hit on the resistor itself.

(3) In case that resin coating or resin seal will be made for a PC board after chip mounting, do washing and drying it enough before coating or sealing. If ion bear or moisture will be sealed in resin coating, it will make performance for moisture inferior sometimes.
For resinous use, it is necessary to set up enough the curing conditions. As it get improper for the condition, change of a resistance value are large and are a case.

(4) According to shape, material, and pressure of clamping in chip mounting machine, there is the case that crack will be appeared on resistor.
Control a shock energy for clamping resistor under 7×10^{-4} J.
With a shock energy around clamping that says here, it is suited to a potential energy, in case that iron block of 25g is dropped naturally to the resistor placed on iron plate for the height of 2.8mm.

(5) The glue to fix a resistor on the PC board around chip mounting, it is needed high insulation resistance and great performance or moisture. And it is needed that these characteristics are not inferior in using temperature range and a hot spot temperature to be acting.

8.4 Using and Handling

(1) It is necessary to investigate the performance and reliability enough when using under harsh environment. Especially, the performance of the product is occasionally damaged when using with the dewy state or ion material adhered.

(2) It is necessary to protect the edge and protection coat of resistors from mechanical stress.

(3) Handle with care when PC board is divided or fixed on support body, because bending of PC board after chip mounting will make mechanical stress for resistors.

(4) Resistors shall be used within rated range shown in specification.
Especially, if voltage more than specified value will be loaded to resistor, there is a case it will make damage for machine because of temperature rise depending on generation of heat, and increase resistance value or breaks.

(5) In case that resistor is loaded a rated voltage, it is necessary to confirms temperature of a resistor and to reduce a load power according to load reduction curve, because a temperature rise of a resistor depends on influence of heat from mounting density and neighboring element.

(6) Observe Limiting element voltage and maximum overload voltage specified in each specification.

(7) If there is a possibility that a large voltage (pulse voltage, shock voltage) charge to resistor, It is necessary that operating condition shall be set up before use, because performance of thin film resistor is affected by a large shock voltage.

8.5 Using and Handling

Refer to EIAJ RCR-2121 -- Electronic Industries Association of Japan technological report "Fixed resistor directions guideline."