Dimensions are in millimeters

Shell size	PART NUMBER	PART NUMBER	A	B	C	D	E	F	G	H	I	J	K	L	M	øN
E	863010LF	863010ASP206LF	15.27	2.4	2.4	24.99	30.55	20.21	12.3	12.7	12.28	10.74	18.6	20.8	24	8
A	863011LF	863011ASP206LF	19.44	2.4	3.2	33.32	38.89	28.55	12.3	12.7	12.28	10.74	27	20.8	24	10
B	863012LF	863012ASP206LF	26.39	3.2	4.75	47.04	52.78	42.29	12.3	12.7	12.28	10.74	40.5	20.8	24	15
C	863013LF	863013ASP206LF	34.53	3.2	6.35	63.50	69.06	58.75	12.3	12.7	12.28	10.74	56.96	20.8	24	18
D	863014LF	863014ASP206LF	33.34	3.2	4.75	61.11	66.67	56.36	12.3	15.4	15.15	13.02	55.03	20.8	24	20.6
	packaging : 100 pieces	packaging : 1 piece														

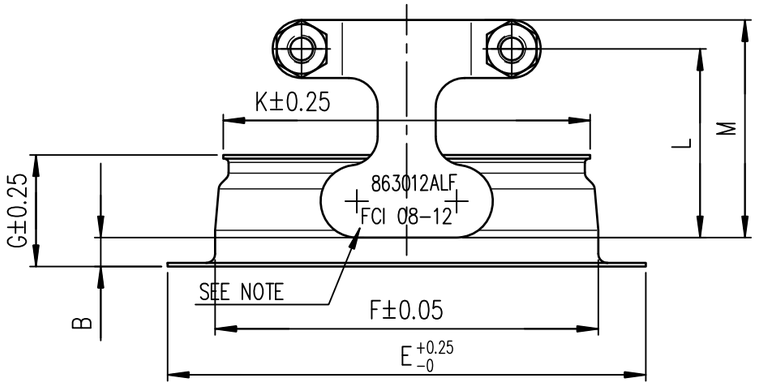

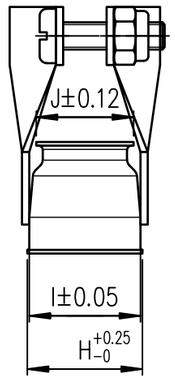

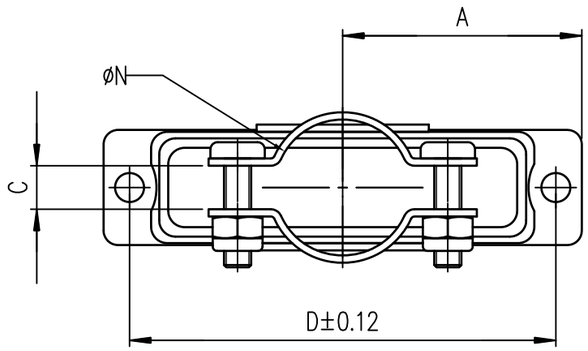

NOTES

- MATERIAL : STEEL
- CORROSION RESISTANCE : 48 HOURS EXPOSURE TO SALT SPRAY
- MARKING FOR PART NUMBERS WITH SP206 :
  MARKING ON THE HOOD -FCI PART NUMBER WITHOUT SP206 +FCI, WEEK AND YEAR CODE
  MARKING ON THE LABEL -FCI PART NUMBER + WEEK AND YEAR CODE

NOTE1: RoHS INFORMATIONS

- The "LF" product meets European union Directives and other country regulations as described in GS-47-0004.
- The product is not intented to be exposed to a manufacturing solder process.
- Plating: Zinc Cr3+, white color.
- Packaging spec: see GS-14-920.

ltr	ecn no	dr	date
A	LS05-0123	LGO	2006/01/12
B	LS06-0095	LGO	2006/06/24
C	LS08-0117	MPE	2008/04/29
D	EXLXI-I-15204	AB	2013/07/11

mat'l. code: SEE.NOTES

surface: ISO 1302

tolerance: ISO 406 ISO 1101

tolerances unless otherwise specified

angles: X±2°

linear: O.X ±0.1; O.XX ±0.1; O.XXX±0.1

projection

MM

scale 1:5

dr	GOISNARD	2006/01/12
engr	ALIAS.BABU	2013/07/11
chr	MITHUN.PAUL	2013/07/11
appd	BIJU.K.PAUL	2013/07/11

product family: D-SUB

title: METAL HOOD WITH CLAMP STRAIGHT EXIT

dwg no: C01-8655-1654

sheet 1 of 1

size: A3

type: CUSTOMER Drawing

sheet index: revision D; sheet 1

form: A3

FCIconnect.com
Copyright FCI