RoHS compliant

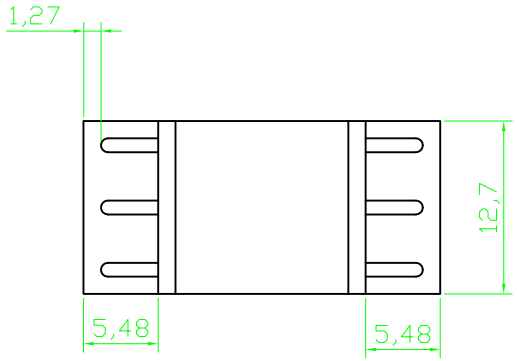

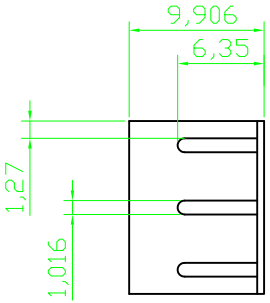

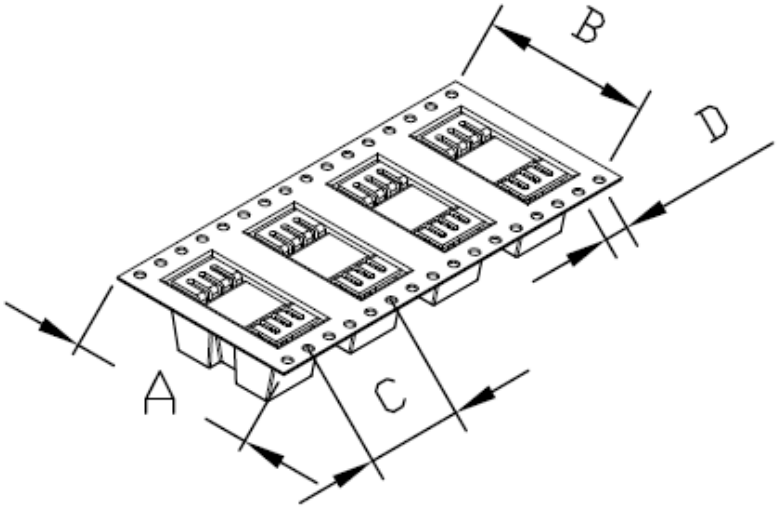

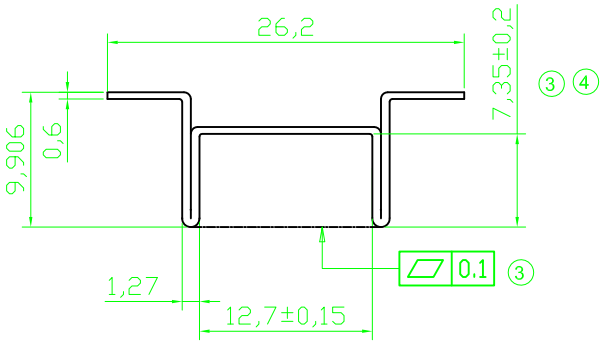

Toleranes: unless otherwise specificied ±0,3

Material: Coper, 06mm thick
Finished: Tin plated

③ Tape & Reel
1Reel = 250PCS

A	B	C	D
44,0	40,40	24,0	4,0

Option Option	Verpackung Packaging	Wärmewiderstand Thermal resistance (K/W)
-	Tape & Reel 250 pcs/reel	23
L	Lose Bulk	23

					Date	Name
⑤	Modify drawing layout	10.03.2010	Alex	Drawn	19.06.02	Hellwig
④	change dimension	27.07.09	N.Schulz	Approved	10.03.2010	A.Plate
③	Update	14.05.09	N.Schulz			
②	Update	19.06.02	N.Schulz			
①	Neuanlage	19.06.02	N.Schulz			
Id.	Modification	Date	Name			

ASSMANN WSW components

Customer-No.

ASSMANN WSW-No.
V1100 SMD/A x

Drawing-No.
ASS 0518 HS

rev05

Replace

Sheet