THIS DRAWING IS UNPUBLISHED. RELEASED FOR PUBLICATION - ,- .
© COPYRIGHT - By - ALL RIGHTS RESERVED.

LOC	DIST
AD	00

REVISIONS

P	LTR	DESCRIPTION	DATE	DWN	APVD
	AK2	REVISED PER ECO-13-005696	25JUL13	KH	MM

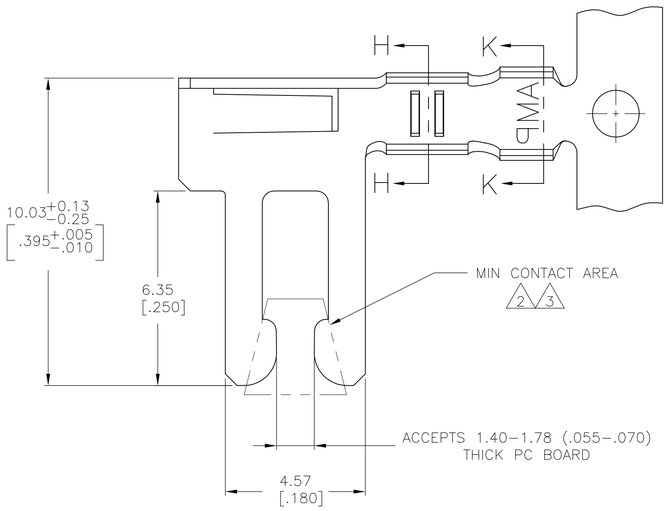

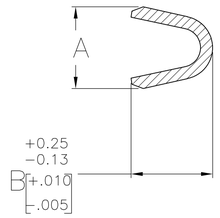

SECTION H−H

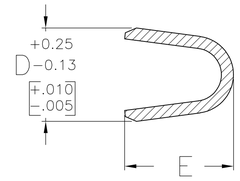

SECTION K−K

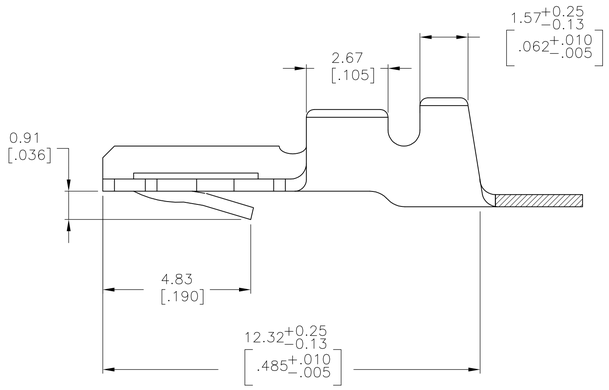

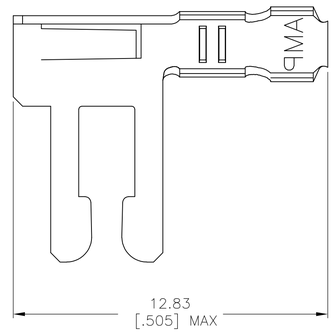

DETAIL X
SCALE 8:1

1 REFER TO CUSTOMER DRAWINGS 530509, 530853, 582370, & 582380 FOR HOUSING AND PC BOARD REQUIREMENTS.

2 0.76µm[.000030] MIN GOLD OVER 1.27µm[.000050] MIN NICKEL IN CONTACT AREA, 1.27µm[.000050] MIN NICKEL ON REMAINDER OF CONTACT.

3 0.38µm[.000030] MIN GOLD OVER 1.27µm[.000050] MIN NICKEL IN CONTACT AREA, 1.27µm[.000050] MIN NICKEL ON REMAINDER OF CONTACT.

4 3.81µm[.000150] MIN TIN−LEAD OVER 0.76µm[.000030] MIN NICKEL ALL OVER.

5 FOR USE WITH STANDARD APPLICATOR.

6 FOR USE WITH MINATURE APPLICATOR.

7 3.81µm[.000150] MIN MATTE TIN PLATE OVER 0.76µm[.000030] MIN NICKEL ALL OVER.

8 OBSOLETE PARTS: OBSOLETE CIS STREAMLINING PER D.RENAUD/D.SINISI

8	OBSOLETE	0.89−1.40 [.035−.055]	26−22	2.16 [.085]	2.54 [.100]	1.90 [.075]	1.90−2.41 [.075−.095]	PER DETAIL−X	−	7	5−66150−2
8	OBSOLETE	1.52−2.29 [.060−.090]	22−18	3.56 +0.25 −0.13 [.140 +.010 −.005]	3.05 [.120]	2.67 [.105]	2.67−3.30 [.105−.130]	PER DETAIL−X	−	7	5−66088−2
		0.89−1.40 [.035−.055]	26−22	2.16 [.085]	2.54 [.100]	1.90 [.075]	1.90−2.41 [.075−..095]	−	6	7	5−66362−1
		1.52−2.29 [.060−.090]	22−18	3.56 +0.25 −0.13 [.140 +.010 −.005]	3.05 [.120]	2.67 [.105]	2.67−3.30 [.105−.130]	−	6	7	5−66335−2
8	OBSOLETE	1.52−2.29 [.060−.090]	22−18	3.56 +0.25 −0.13 [.140 +.010 −.005]	3.05 [.120]	2.67 [.105]	2.67−3.30 [.105−.130]	−	5	7	5−60215−4
	OBSOLETE	0.89−1.40 [.035−.055]	26−22	2.16 [.085]	2.54 [.100]	1.90 [.075]	1.90−2.41 [.075−.095]	PER DETAIL−X	−	4	66150−2
		1.52−2.29 [.060−.090]	22−18	3.56 +0.25 −0.13 [.140 +.010 −.005]	3.05 [.120]	2.67 [.105]	2.67−3.30 [.105−.130]	PER DETAIL−X	−	4	66088−2
	OBSOLETE	0.89−1.40 [.035−.055]	26−22	2.16 [.085]	2.54 [.100]	1.90 [.075]	1.90−2.41 [.075−.095]	−	6	2	66362−2
		0.89−1.40 [.035−.055]	26−22	2.16 [.085]	2.54 [.100]	1.90 [.075]	1.90−2.41 [.075−..095]	−	6	4	66362−1
8	OBSOLETE	1.52−2.29 [.060−.090]	22−18	3.56 +0.25 −0.13 [.140 +.010 −.005]	3.05 [.120]	2.67 [.105]	2.67−3.30 [.105−.130]	−	6	2	66335−3
		1.52−2.29 [.060−.090]	22−18	3.56 +0.25 −0.13 [.140 +.010 −.005]	3.05 [.120]	2.67 [.105]	2.67−3.30 [.105−.130]	−	6	4	66335−2
		1.52−2.29 [.060−.090]	22−18	3.56 +0.25 −0.13 [.140 +.010 −.005]	3.05 [.120]	2.67 [.105]	2.67−3.30 [.105−.130]	−	5	2	60215−5
		1.52−2.29 [.060−.090]	22−18	3.56 +0.25 −0.13 [.140 +.010 −.005]	3.05 [.120]	2.67 [.105]	2.67−3.30 [.105−.130]	−	5	4	60215−4
		INSULATION DIA RANGE	WIRE GAGE RANGE	E	D	B	A	LOOSE PIECE	REELING	FINISH	PART NUMBER

THIS DRAWING IS A CONTROLLED DOCUMENT.

DIMENSIONS: mm [INCHES]

TOLERANCES UNLESS OTHERWISE SPECIFIED:
0 PLC ± −
1 PLC ± −
2 PLC ± 0.13 [.005]
3 PLC ± −
4 PLC ± −
ANGLES ± −

MATERIAL: PHOSPHOR BRONZE
FINISH: SEE TABLE

DWN M.BINNER 09 JUL 97
CHK R.STONE 11 NOV 97
APVD D.WIKE 09 APR 98
PRODUCT SPEC 108−9016
APPLICATION SPEC 114−9002
WEIGHT −

TE Connectivity

NAME: CONTACT, DUO−TYNE TM FLAG

SIZE	CAGE CODE	DRAWING NO	RESTRICTED TO
A1	00779	C−60215	−

CUSTOMER DRAWING | SCALE 10:1 | SHEET 1 OF 1 | REV AK2

4805 (3/11)