Brushed Aluminum Knobs

450-6015, 450-6016, 450-6017
450-7015, 450-7016

Date Last Revised: 10-20-05

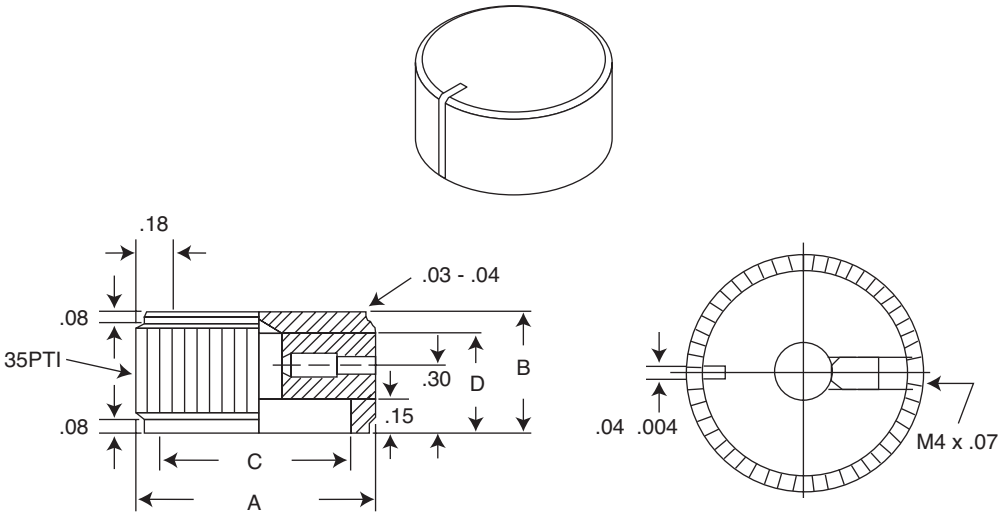

Dimensions: In.

SPECIFICATIONS	
Material:	aluminum 997
Finish:	A-clear anodize
	B-black anodize
Inserts:	brass

Mouser Stock No.	Dia. (In.)	Height (In.)	Color	A	B	C	D	Shaft Hole	Finish
450-6015	.625	.56	Aluminum	.63	.55	.43	.41		A
450-6016	.875	.56	Aluminum	.87	.55	.63	.41		A
450-6017	1.125	.56	Aluminum	1.10	.55	.87	.41	.25±.05	A
450-7015	.625	.56	Black Black	.63	.55	.43	.41		B
450-7016	.875	.56		.87	.55	.63	.41		B

Available from Mouser Electronics
1-800-346-6873
www.mouser.com

EPD-200018

Specifications are subject to change without notice. No liability or warranty implied by this information. Environmental compliance based on producer documentation.