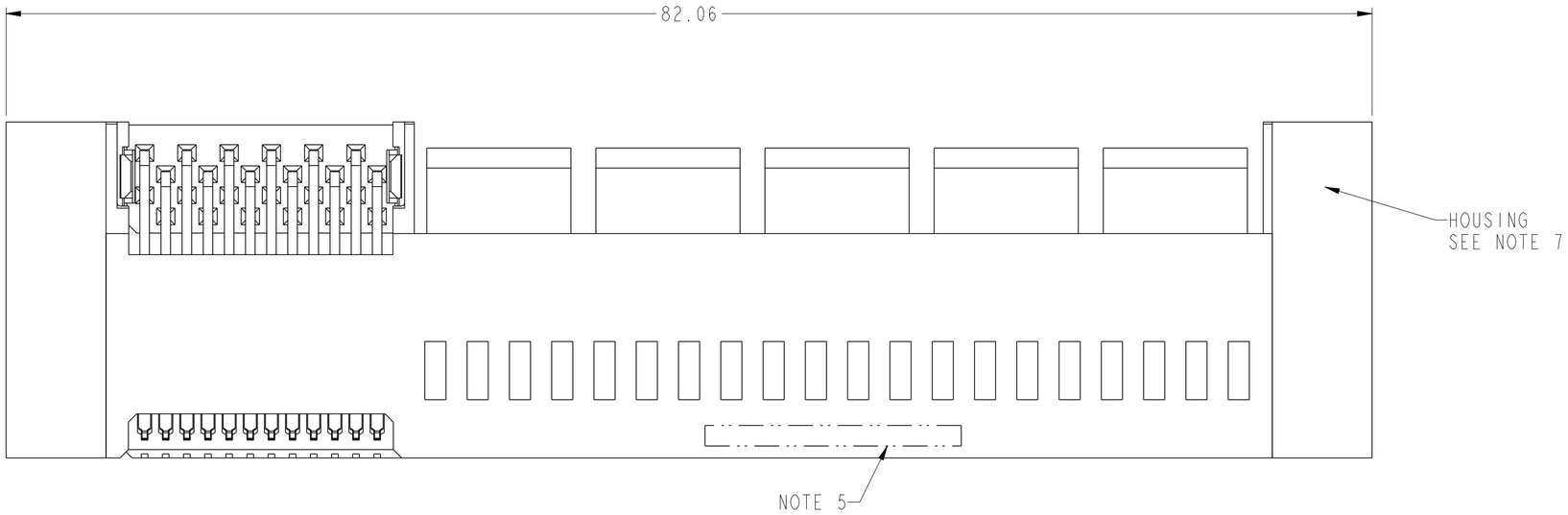

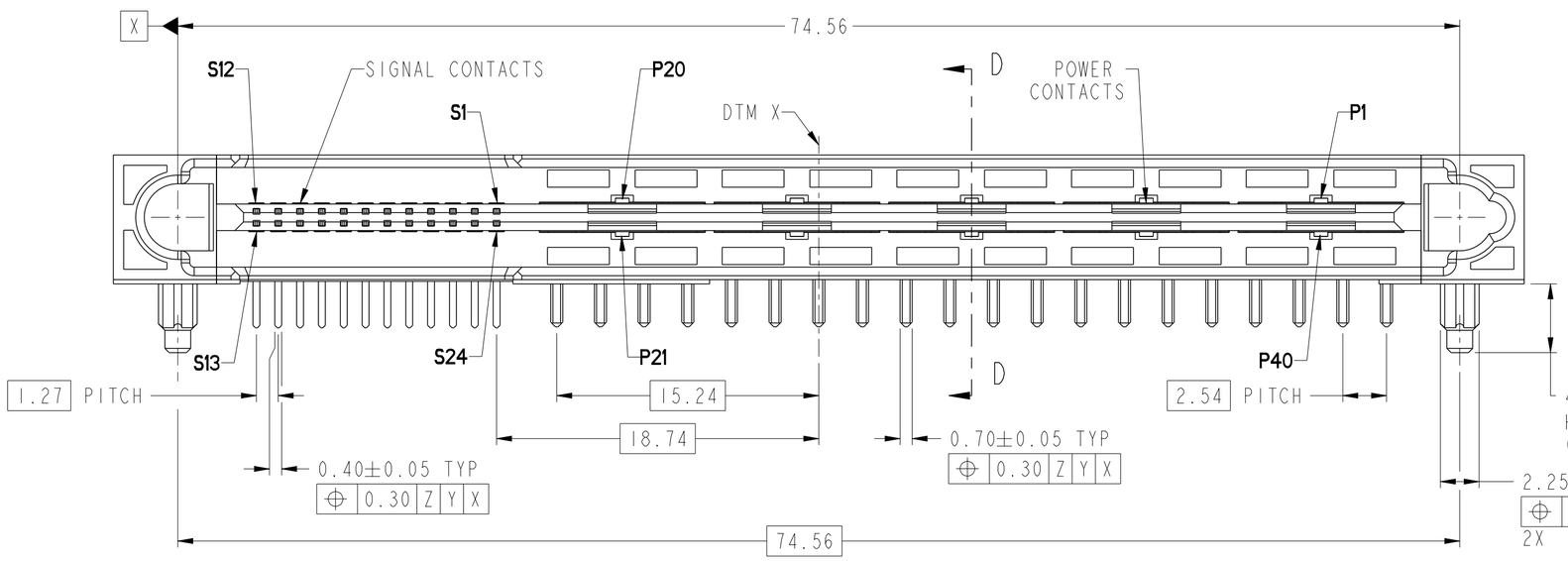

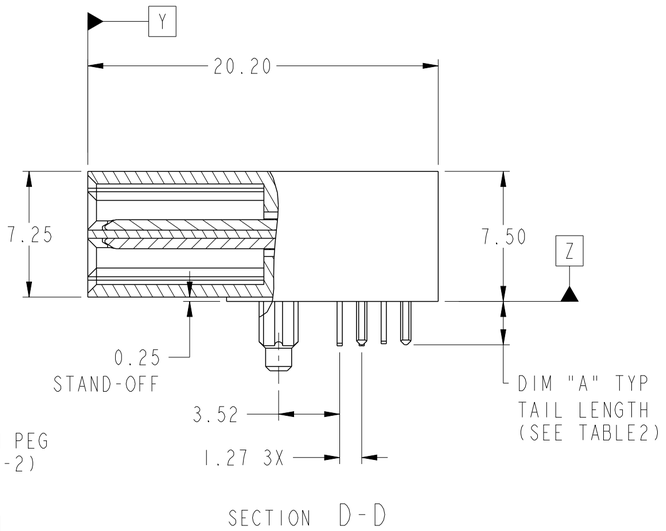

PRELIMINARY

spec ref			dr	Daniel Xiao	2013/03/17	projection	MM
tolerance std: ISO 406, ISO 1101	TOLERANCES UNLESS OTHERWISE SPECIFIED		eng	Daniel Xiao	2014/02/27		
			chr	-	-		
			appr	Collins Lu	2014/02/27	product family	

size: A2	scale: 4:1						
ecn no: -							
rel level: Released							
surface: ✓ ISO 1302	linear	0.X	±0.3	title: HPCE BTB R/A HEADER 40P-24S (WITH GUIDE)	dwg no: 10124392	rev: A	
		0.XX	±0.15				
		0.XXX	±0.05				
	angular	0°	±2°	www.fci.com	cat. no.	Product - Customer Drw	sheet 1 of 3

Copyright FCI.

Pro/E File - REV C - 2009-06-09

CONTACT TYPE	TOP LAYER DESCRIPTION	TABLE I (HPCE / SOLDER TAILS) PLATED THROUGH-HOLE REQUIREMENTS				
		DRILLED HOLE DIAMETER	COPPER THICKNESS	TIN-LEAD THICKNESS	TIN THICKNESS	FINISHED HOLE DIAMETER
POWER	TIN-LEAD	1.10-1.16 (1.15 DRILL)	0.025 - 0.050	0.005 - 0.015	--	0.94 - 1.10
	IMMERSION TIN	1.10-1.16 (1.15 DRILL)	0.025 - 0.050	--	0.9 - 1.5um	0.94 - 1.10
	COPPER (SEE NOTE 8)	1.10-1.16 (1.15 DRILL)	0.025 - 0.050	--	--	0.94 - 1.10
SIGNAL	TIN-LEAD	0.93-0.99 (0.98 DRILL)	0.025 - 0.050	0.005 - 0.015	--	0.77 - 0.93
	IMMERSION TIN	0.93-0.99 (0.98 DRILL)	0.025 - 0.050	--	0.9 - 1.5um	0.77 - 0.93
	COPPER (SEE NOTE 8)	0.93-0.99 (0.98 DRILL)	0.025 - 0.050	--	--	0.77 - 0.93

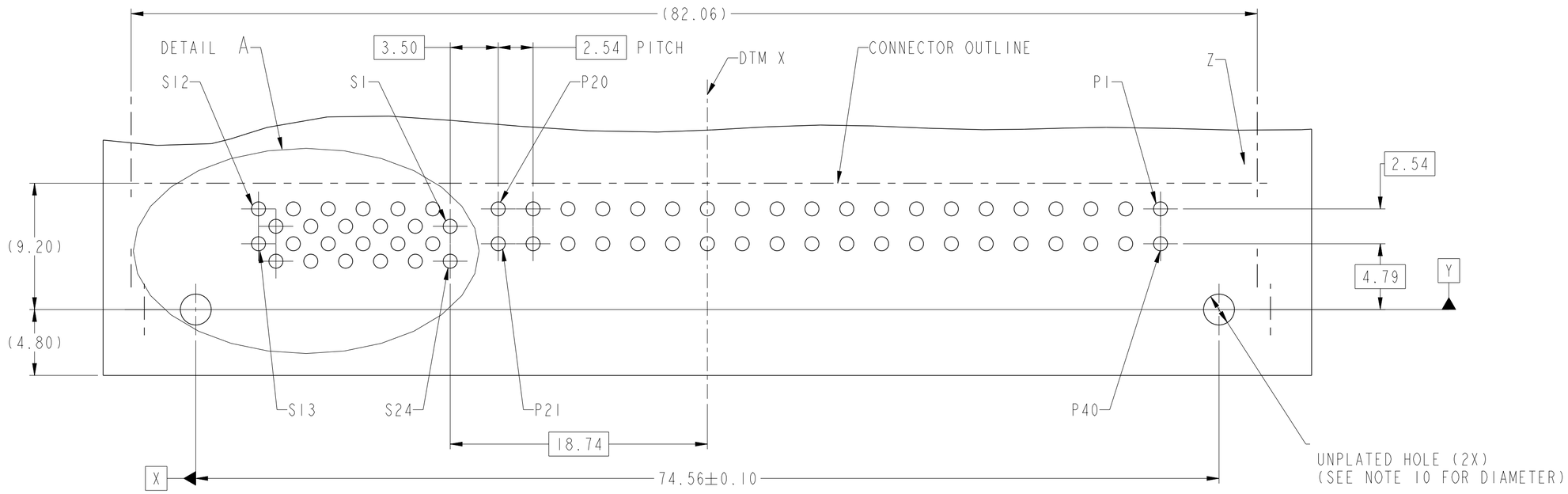

TOP SURFACE
RECOMMENDED PCD LAYOUT

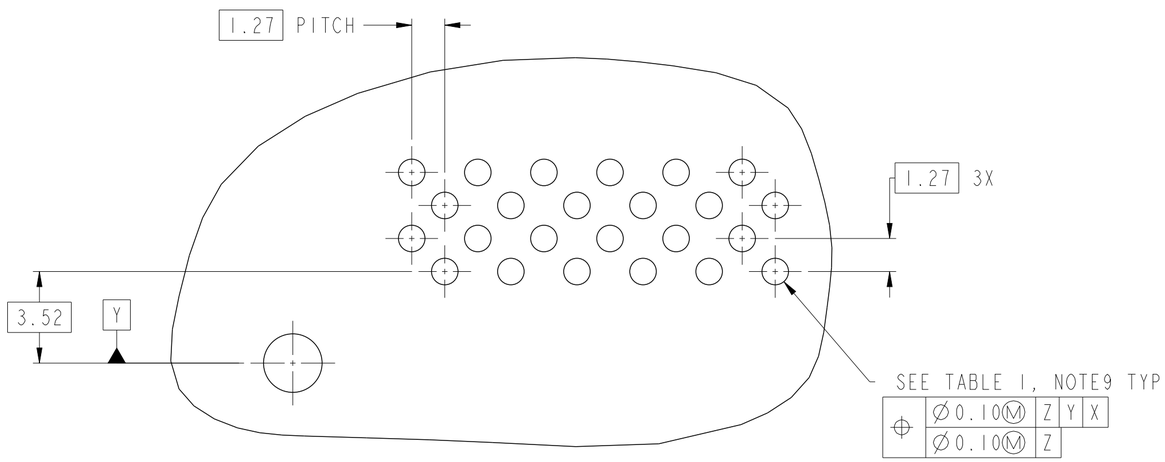

DETAIL A
SCALE 6:1

PRELIMINARY

spec ref			dr Daniel Xiao 2013/03/17	projection	MM	size A2	scale 4:1
tolerance std	TOLERANCES UNLESS OTHERWISE SPECIFIED		eng Daniel Xiao 2014/02/27			ecn no -	
			chr - -				
			appr Collins Lu 2014/02/27	product family		rel level	Released
surface ✓	linear	0.X ±0.3	FCI	title HPCE BTB R/A HEADER		dwg no 10124392	rev A
		0.XX ±0.15		HPCE BTB			
		0.XXX ±0.05					
	angular	0° ±2°	www.fci.com	cat. no.	Product - Customer Drw		sheet 2 of 3

Copyright FCI.

PART NUMBER (TABLE 2)				
PART NUMBER	TAIL TYPE	OPTIONAL PLASTIC PEG	DIM "A" TYPICAL TAIL LENGTH	RECOMMENDED BOARD THICKNESS
10124392-001LF	SOLDER TAIL	YES	2.60±0.25	1.57
10124392-002LF		NO		
10124392-003LF		YES	3.25±0.25	2.36
10124392-004LF		NO		

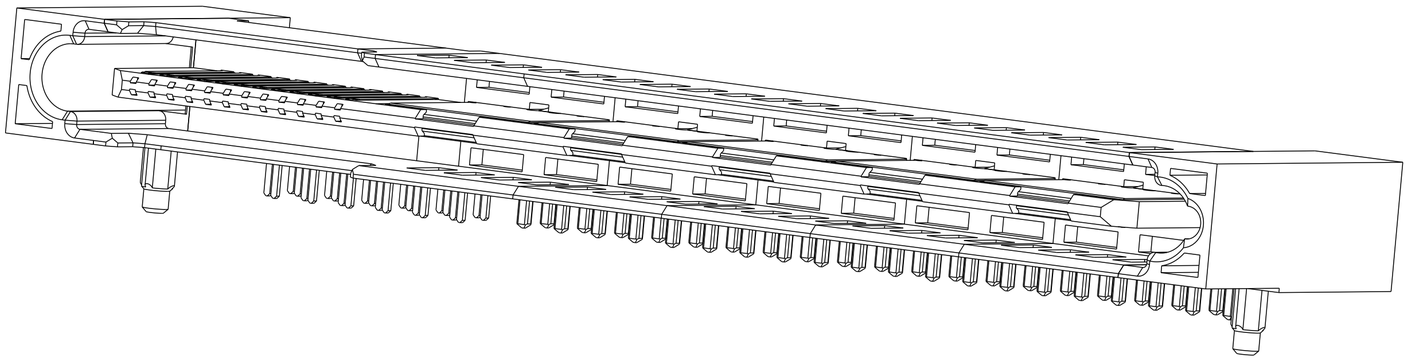

NOTES:

1. CONNECTOR MATERIALS:

   HOUSING: HIGH TEMPERATURE THERMAL PLASTIC, BLACK
   UL 94V-0 COMPLIANT
   CONTACTS: HIGH PERFORMANCE COPPER ALLOY.

2. CONTACT FINISH REF. GS-12-1031 SECTION TBD

3. PRODUCT SPECIFICATION: GS-12-1125

4. APPLICATION SPECIFICATION: GS-20-0388

5. PRODUCT MARKING (FCI PART NUMBER & DATE CODE) ON HOUSING IN AREA SHOWN.

6. PACKAGING MEETS FCI SPECIFICATION GS-14-2272.

7. HOUSING COMPONENT WILL WITHSTAND EXPOSURE TO 260°C PEAK TEMPERATURE FOR 60 SECONDS IN A CONVECTION, INFRA-RED, OR VAPOR PHASE REFLOW OVEN.

8. COPPER PLATING THICKNESS IN CENTER OF VIA-HOLE CAN BE NO MORE THAN 0.003 LESS THAN OTHER AREAS.

9. ALL HOLE SIZES ARE FINISHED HOLE SIZES.

10. MOUNTING HOLES ARE UNPLATED
    ∅ 2.20±0.05 FOR SOLDER TAILS

spec ref			dr	Daniel Xiao	2013/03/17	projection	MM
tolerance std	TOLERANCES UNLESS OTHERWISE SPECIFIED		eng	Daniel Xiao	2014/02/27		
			chr	-	-		
			appr	Collins Lu	2014/02/27	product family	
surface ✓	linear	0.X	±0.3	FCI	title: HPCE BTB R/A HEADER	dwg no: 10124392	rev: A
		0.XX	±0.15		HPCE BTB		
		0.XXX	±0.05				
	angular	0°	±2°	www.fci.com	cat. no.	Product - Customer Drw	sheet 3 of 3

size: A2 | scale: 4:1 | ecn no: - | rel level: Released

Copyright FCI.