THIS DRAWING IS UNPUBLISHED. RELEASED FOR PUBLICATION -,- .
© COPYRIGHT - By - ALL RIGHTS RESERVED.

LOC	DIST
AF	50

REVISIONS

P	LTR	DESCRIPTION	DATE	DWN	APVD
	U1	REVISED PER ECO-11-004587	11MAR11	RK	HMR

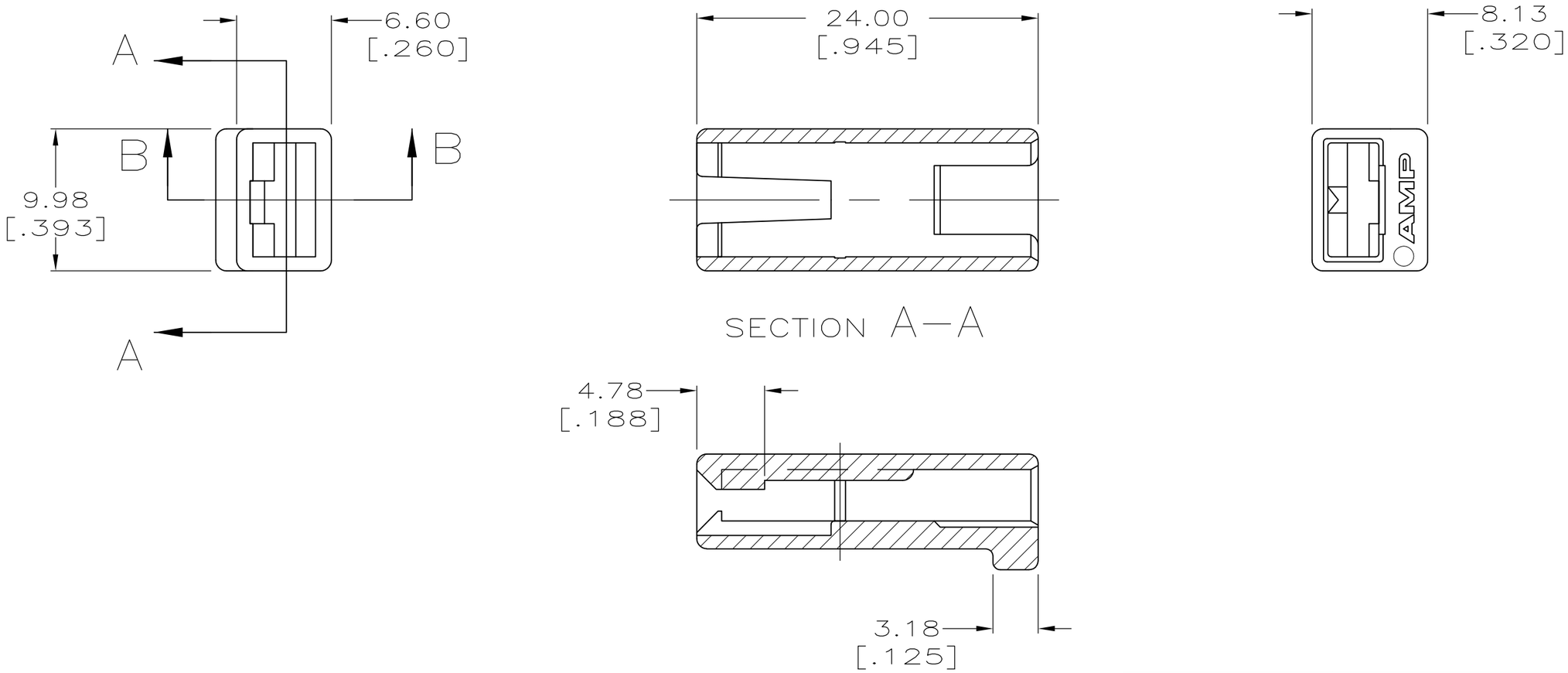

COLOR	MATERIAL	PART NO.
RED	6/6 NYLON	480054-5
BLACK	6/6 NYLON	480054-4
NATURAL	6/6 NYLON	480054-3
OBSOLETE ~~BLACK~~	~~CYCOLAC~~	~~480054-2~~

THIS DRAWING IS A CONTROLLED DOCUMENT.

DIMENSIONS: mm [INCHES]

TOLERANCES UNLESS OTHERWISE SPECIFIED:

0 PLC	± -
1 PLC	± -
2 PLC	± 0.38 [.015]
3 PLC	± -
4 PLC	± -
ANGLES	± -

MATERIAL: SEE TABLE

FINISH: SEE TABLE

DWN JR RUTH 08/JAN/99
CHK MS FEHER 08/JAN/99
APVD S HEADER 08/JAN/99
PRODUCT SPEC —
APPLICATION SPEC —
WEIGHT —

TE Connectivity

NAME: HOUSING, RECEPT, FASTIN-FASTON, SINGLE CIRCUIT, 6.35 [.250] SERIES

SIZE	CAGE CODE	DRAWING NO	RESTRICTED TO
A3	00779	C-480054	—

CUSTOMER DRAWING

SCALE	SHEET	REV
3:1	1 OF 1	U1