THIS DRAWING IS UNPUBLISHED. RELEASED FOR PUBLICATION 20
© COPYRIGHT 20 BY - ALL RIGHTS RESERVED.

LOC	DIST
FT	0

REVISIONS

P	LTR	DESCRIPTION	DATE	DWN	APVD
	C2	REVISED PER ECO-12-007714	28APR2012	KH	MS

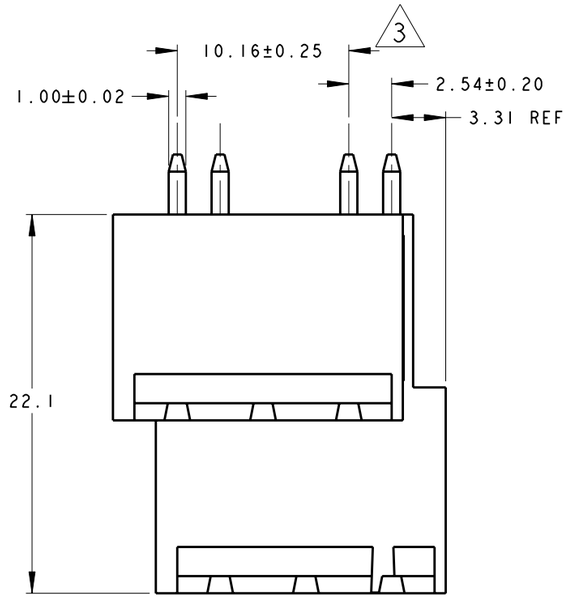

1. MATERIALS AND FINISH
   HOUSING: PA 6-6, UL 94-V0, COLOR: SEE TABLE.
   TERMINAL: COPPER ALLOY, TIN PLATED.
2. SUITABLE FOR 1,6-2,4mm PC BOARD THICKNESS.
3. NOT CUMULATIVE TOLERANCE.
4. P/N FROM 284067-3 TO 1-284067-3 ARE OBTAINED BY ASSEMBLING DIFFERENT MONOLITHIC MODULES CHOOSEN AMONG :284067-2 AND 284067-3, IN ORDER TO REALIZE THE DESIRED NUMBER OF WAYS.

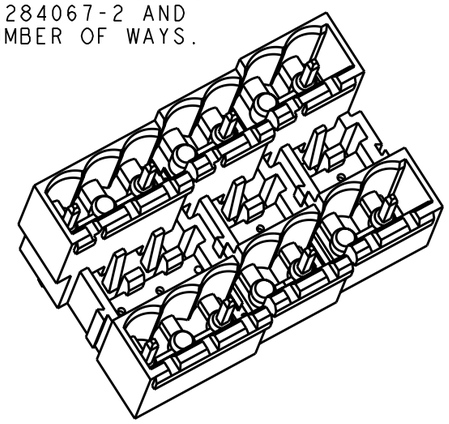

EXPLODED VIEW OF 284067-4

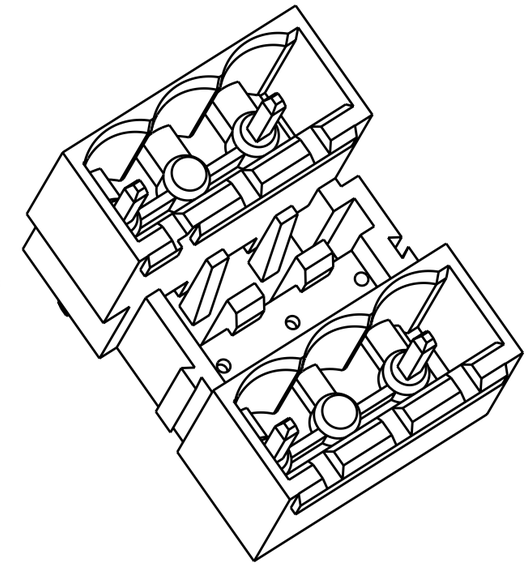

284067-2 AS SHOWN

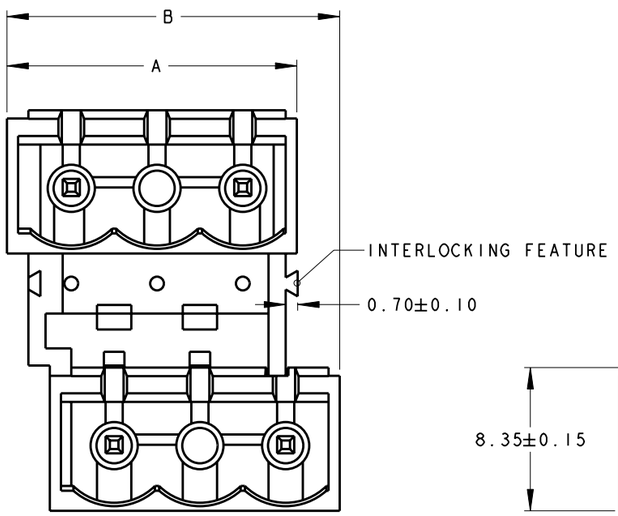

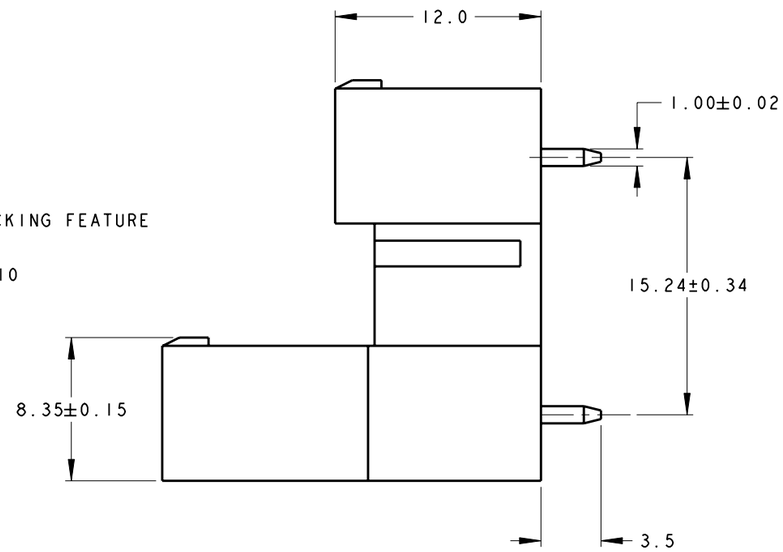

MATERIAL COLOR	DIM"A"	DIM"B"	N°OF TOTAL POS.	PART NUMBER
BLACK	37.60	40.14	4	1-284067-4
GREEN	129.04	131.58	13	1-284067-3
	118.88	121.42	12	1-284067-2
	108.72	111.26	11	1-284067-1
	98.56	101.10	10	1-284067-0
	88.40	90.94	9	284067-9
	78.24	80.78	8	284067-8
	68.08	70.62	7	284067-7
	57.92	60.46	6	284067-6
	47.76	50.30	5	284067-5
	37.60	40.14	4	284067-4
	27.44	29.98	3	284067-3
	17.28	19.82	2	284067-2

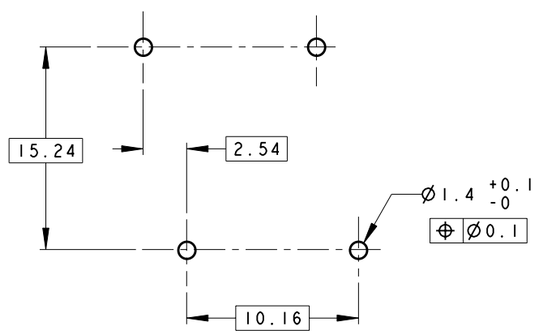

RECOMMENDED PC BOARD LAYOUT

THIS DRAWING IS A CONTROLLED DOCUMENT.

DIMENSIONS: mm

TOLERANCES UNLESS OTHERWISE SPECIFIED:

0 PLC	±-
1 PLC	±.3
2 PLC	±.25
3 PLC	±-
4 PLC	±-
ANGLES	±2

MATERIAL 1 FINISH 1

DWN	E. ZANOLINI	31JAN2002
CHK	E. ZANOLINI	31JAN2002
APVD	D. BIEVENOUR	31JAN2002
PRODUCT SPEC	-	
APPLICATION SPEC	-	
WEIGHT	-	

TE Connectivity

NAME TERMINAL BLOCK HEADER ASSEMBLY, MULTIPLE, 180 DEGREE, CLOSED ENDS, 10.16mm PITCH

SIZE	CAGE CODE	DRAWING NO	RESTRICTED TO
A3	00779	C-284067	-

CUSTOMER DRAWING | SCALE 1:4.5 | SHEET 1 OF 1 | REV C2

1470-19 (3/11)

Pro/ENGINEER DRAWING