DWG. NO. SD-56377-005

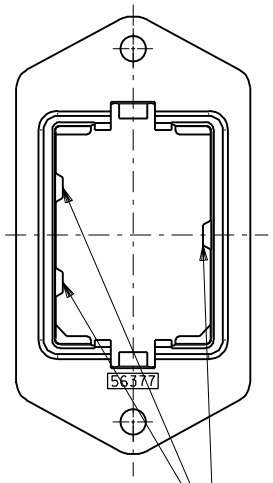

ハウジング挿入方向キー
POLARIZATIONS KEY FOR HOUSING

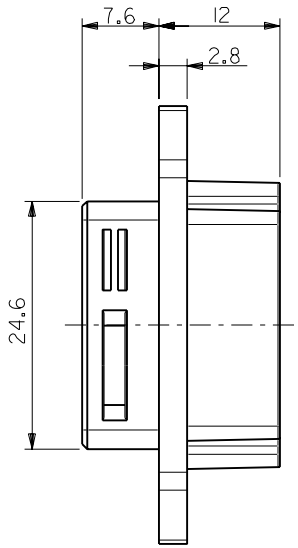

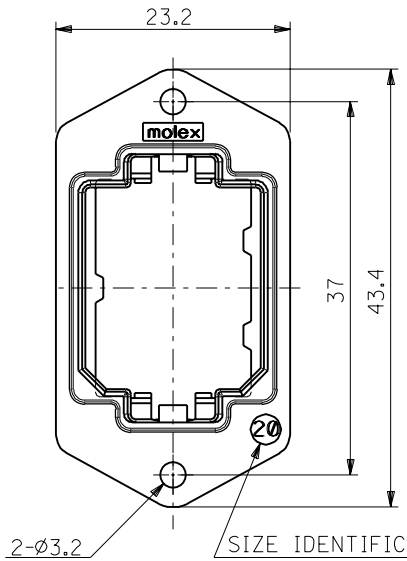

SIZE IDENTIFICATION

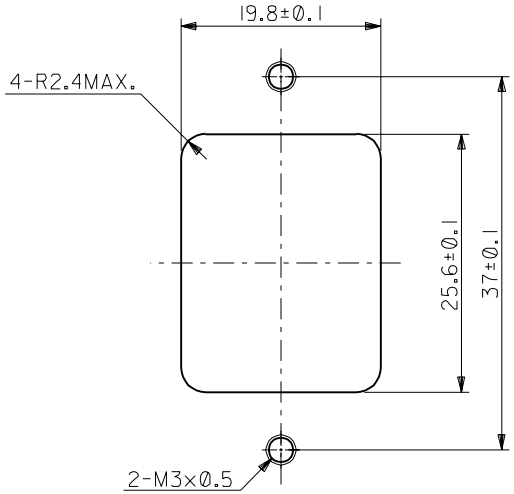

推奨パネル切り取り寸法（前面取り付け）
RECOMMENDED PANEL OPENING (FRONT MOUNTING)

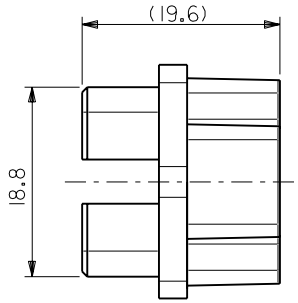

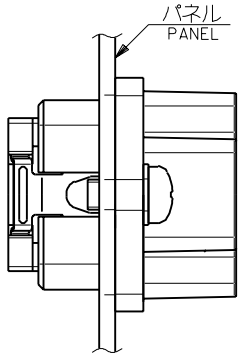

パネル前面取り付け
FRONT MOUNT TYPE

注記
NOTES

1. 材　質
MATERIAL
亜鉛合金，ニッケルメッキ
ZINC ALLOY , Ni PLATING

2. 適用ハウジングアッセンブリ：51233-201* (PIN HS'G ASS'Y)
51238-201* (SOCKET HS'G ASS'Y)
APPLICABLE HOUSING ASS'Y : 51233-201* (PIN HS'G ASS'Y)
51238-201* (SOCKET HS'G ASS'Y)

3. 推奨ねじ締め付けトルク：5～6 kgf・cm
RECOMENDED SCREW TIGHTENING TORQUE : 5～6 kgf・cm

56377-2000	56377-****
MATERIAL.NO	MODEL.NO

DO NOT SCALE DRAWING

EC NO.			REVISED '01/10/17	RELEASED '01/02/09
DRWN:			EC NO. J2002-0932	EC NO. JD2001-1040
CH'K:			DRWN: S.AKIYAMA	DRWN: S.AKIYAMA
APPR:			CH'K: J.MIYAZAWA	CH'K: J.MIYAZAWA
			APPR: YO.ITO	APPR: H.IKESUGI
			A	0

DESCRIPTION / REV

MATERIAL 材料: 注記参照 SEE NOTES
FINISH 仕上げ: —//—
WIRE RANGE 適用電線範囲: —//—
INS. RANGE 被覆外径: —//—

GENERAL TOLERANCES: (UNLESS SPECIFIED) 一般公差	
10 UNDER 未満	±0.2
10 OVER 以上 30 UNDER 未満	±0.25
30 OVER 以上	±0.3
ANGLE 角度	±3°

SCALE 2-1 | DESIGN UNITS ☒mm ☐INCH | THIRD ANGLE PROJECTION | DIMENSIONS: ☐ mm/INCH ☐ INCH/mm ☒ mm ONLY | SHT | REV | REVISE ON CAD ONLY

DRAWN BY & DATE: S. Akiyama '01/01/25
CHECKED BY & DATE: J. Miyazawa / Y. Ito
APPROVED BY & DATE: A. Ikesugi

TITLE: COMPACT ROBOT CONN. (CRC) RECEPTACLE SHELL

molex MOLEX INCORPORATED

CAD FILENAME: 56377005.S01 | MATERIAL NO.: SEE CHART | DRAWING NO.: SD-56377-005 | SHEET NO.: 1 OF 1

THIS DRAWING CONTAINS INFORMATION THAT IS PROPRIETARY TO MOLEX INCORPORATED AND SHOULD NOT BE USED WITHOUT WRITTEN PERMISSION.

SIZE B

56377005.S01

EN-02J(097) MXJ-54