REVISIONS			
REV	DESCRIPTION	DATE	APPROVED
01_0	RELEASED	2/22/89	

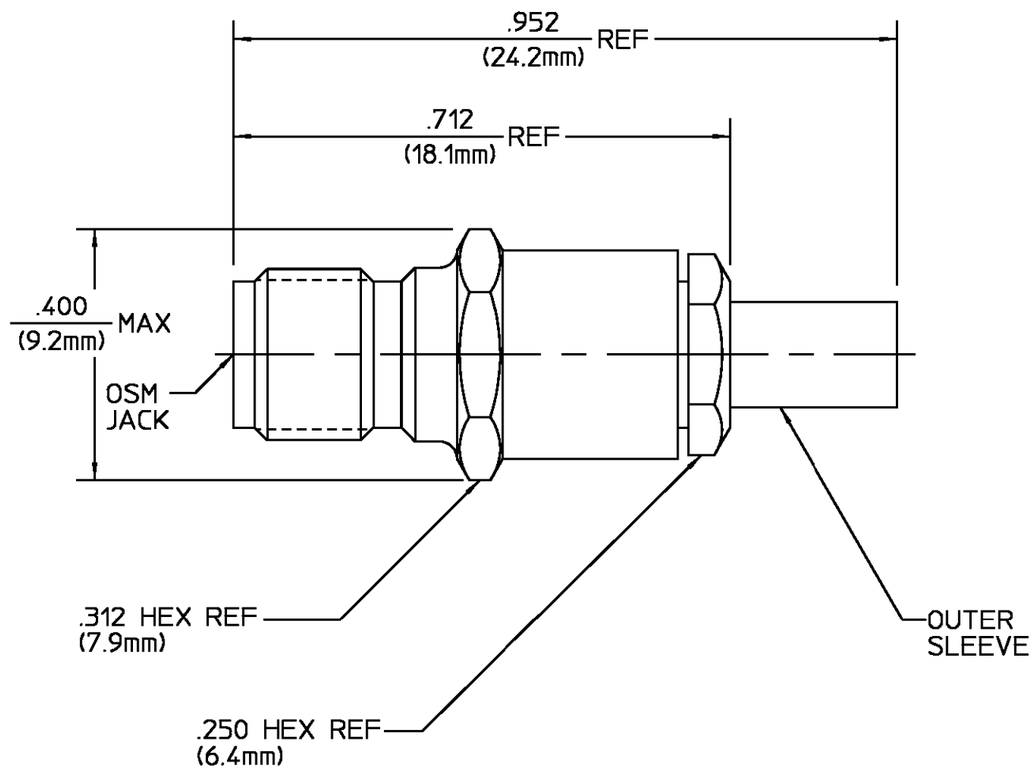

COMPONENT	MATERIAL	FINISH
HOUNTING NUT CLAMP NUT	STAINLESS STEEL PER ASTM-A484 AND ASTM-A582, TYPE 303	PASSIVATE PER QQ-P-35
DIELECTRIC	TFE FLUOROCARBON PER MIL-P-19468 AND FED SPEC L-P-403	N/A
CENTER CONTACT	BERYLLIUM COPPER PER QQ-C-530, ALLOY 173	GOLD PLATE PER MIL-G-45204 OVER COPPER PLATE PER MIL-C-14550
SLEEVE	STAINLESS STEEL PER ASTM-A484 AND ASTM-A582, TYPE 303	PASSIVATE PER
FERRULE	SOFT COPPER ALLOY	GOLD PLATE PER MIL-G-45204 OVER COPPER PLATE PER MIL-C-14550

NOTES:

1. DESIGNED FOR USE WITH RG174 AND RG316 CABLE
2. CAPTURED CENTER CONTACT

CABLE ENTRY DIAMETER MINIMUM	
CONTACT	.021
SLEEVE	.067

UNLESS OTHERWISE SPECIFIED DIMENSIONS ARE IN INCHES
TOLERANCE ON
FRAC. ± 1/64 DEC. ±.005 ANGLES ± 1°

These drawings and specifications are the property of Omni Spectra Incorporated and shall not be reproduced or copied or used in whole or in part as the basis for the manufacture or sale of item(s) without written permission.

DRAWN BY E.F.HOYLE DATE 1/26/89
CHECKED BY L.ROSS 2/10/89
APP'D BY 2/22/89

USE ASS'Y PROCEDURE

NO. A.P. 20-523

AMP Incorporated
140 Fourth Avenue
Waltham, MA 02451-7599

TITLE OSM STRAIGHT CABLE JACK CRIMP ATTACHMENT M39012/57-3026 CAT C

SIZE	CODE IDENT NO.		REV
B	26805	2032-8026-92	01_0
SCALE 5:1			SHEET 1 OF 1

CUSTOMER DRAWING

AMP PART # 1051919-1
SHEET 1 OF 1 REV A