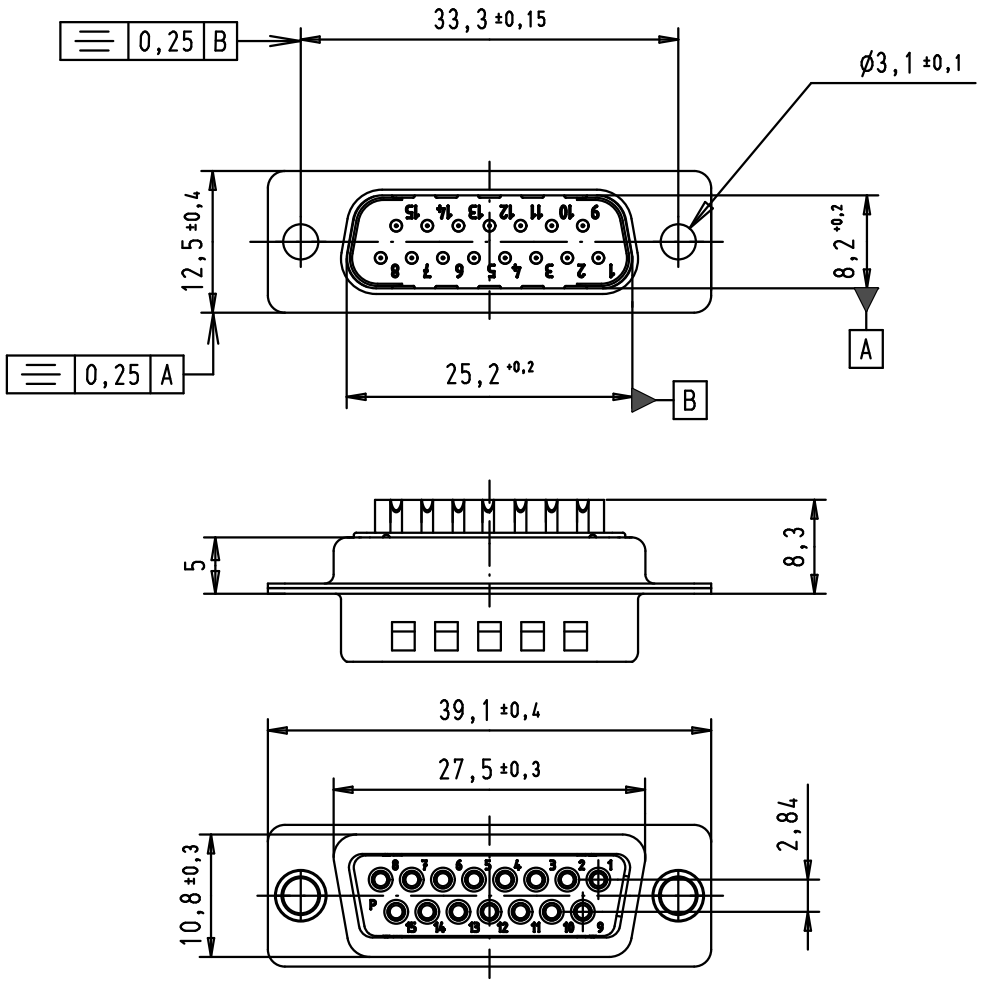

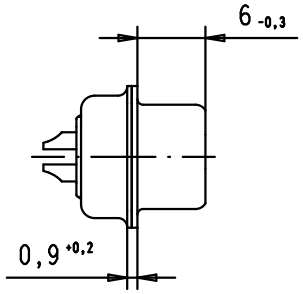

Solder buckets for AWG 20 Max

SPECIFICATION

Performance level	PL2
Filter type	C
Capacitance	47pf±20%
Working Voltage	100v
Current Rating	7,5A
Insulation Resistance	>1GΩ

FREQUENCY (MHz)	ATTENUATION dB
5	-
10	-
50	-
100	-
500	30dB
1000	35dB

Mod.	Dat.	Name
36283	12/01/12	SD
33267	17/11/05	JMDR
31058	8-JUL-02	CV

	Dat.	Name
Detail.	8-JUL-02	CV
Insp.	12/01/12	JB
Stand.		

All Dim. in mm
Orig. Size DIN A 4

HARTING EURL
F-95972 Paris

D-Sub, male, straight
15 Poles, solder buckets,
with dimples and holes

Ma?Mstab/ Scale: 1.5:1

TB 09642217210

Sub.

Blatt/Page 1/1