THIS DRAWING IS UNPUBLISHED. RELEASED FOR PUBLICATION -,- .
© COPYRIGHT - BY TYCO ELECTRONICS CORPORATION. ALL RIGHTS RESERVED.

LOC	DIST
FT	64

REVISIONS

P	LTR	DESCRIPTION	DATE	DWN	APVD
	K	REV PER OG3C-0214-99	24AUG00	BH	HW
	K1	REVISED PER ECO-10-000443	15JAN10	KK	AEG

1. RECEPTACLE ACCEPTS AN .008-.014 THK. I.C. LEAD.
2. TWO .000030 MIN.THK.GOLD STRIPES IN CONTACT AREA, TIN-LEAD(93-7) ON CONTACT LEGS, BALANCE OF CONTACT NICKEL PLATED.
3. TWO .000015 MIN.THK.GOLD STRIPES IN CONTACT AREA, TIN-LEAD(93-7) ON CONTACT LEGS, BALANCE OF CONTACT NICKEL PLATED.
4. OBSOLETE PARTS: OBSOLETE CIS STREAMLINING PER D.RENAUD/D.SINISI

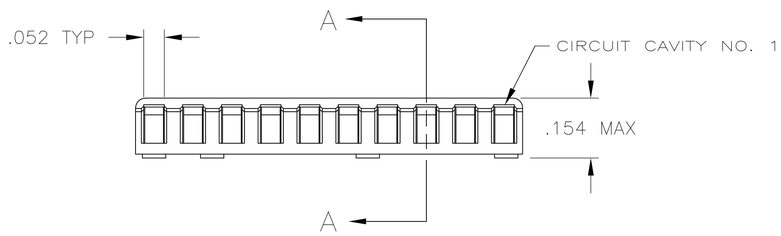

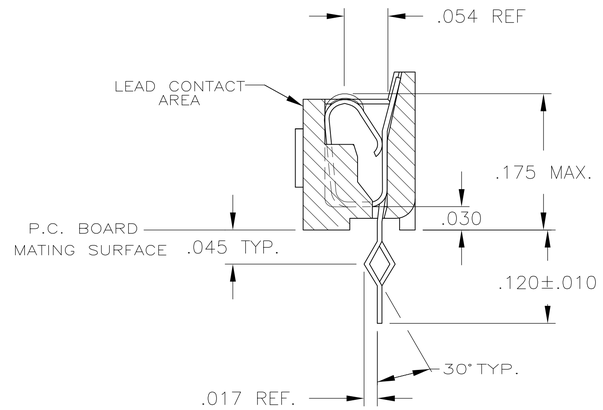

SECTION A-A
ROTATED 90° CW
SCALE 10:1
FOR -6, ~~-7~~ & -8 ONLY

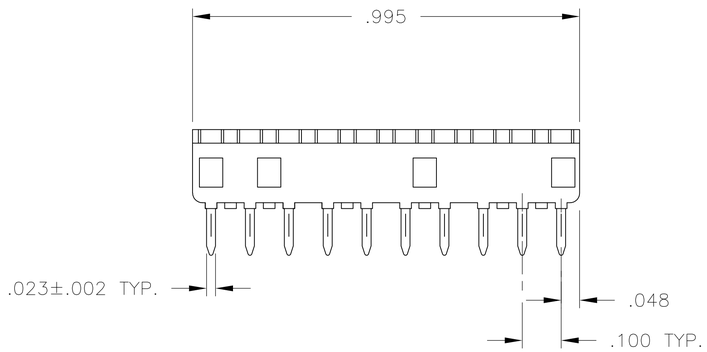

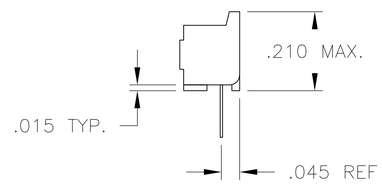

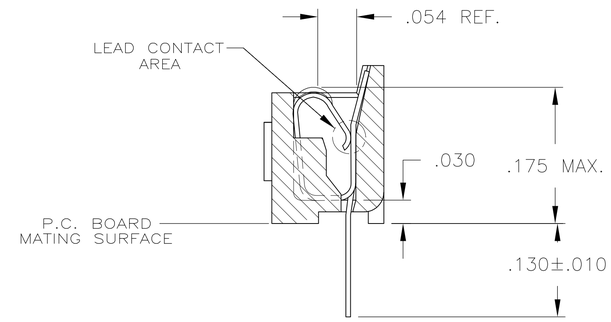

SECTION A-A
ROTATED 90° CW
SCALE 10:1
FOR -1, ~~-2~~ & ~~-3~~ ONLY

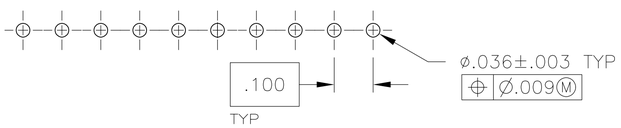

RECOMMENDED MOUNTING HOLE PATTERN

	CONTACT FINISH	CONTACT MAT'L	HOUSING MATERIAL	PART NO.
	TINNED	PHOS.BRZ.	GLASS-FILLED THERMOPLASTIC, 94V-O, BLACK	643642-8
OBSOLETE	2	BE.CU.	GLASS-FILLED THERMOPLASTIC, 94V-O, BLACK	643642-7
	TINNED	BE.CU.	GLASS-FILLED THERMOPLASTIC, 94V-O, BLACK	643642-6
SUPSD BY 643642-2	3	PHOS.BRZ.	GLASS-FILLED THERMOPLASTIC, 94V-O, BLACK	643642-4
OBSOLETE	TINNED	PHOS.BRZ.	GLASS-FILLED THERMOPLASTIC, 94V-O, BLACK	643642-3
4 OBSOLETE	2	BE.CU.	GLASS-FILLED THERMOPLASTIC, 94V-O, BLACK	~~643642-2~~
	TINNED	BE.CU.	GLASS-FILLED THERMOPLASTIC, 94V-O, BLACK	643642-1

THIS DRAWING IS A CONTROLLED DOCUMENT.

DIMENSIONS: INCHES

TOLERANCES UNLESS OTHERWISE SPECIFIED:
0 PLC ± -
1 PLC ± -
2 PLC ± -
3 PLC ± .005
4 PLC ± -
ANGLES ± -

MATERIAL SEE TABLE
FINISH SEE TABLE

DWN M.CYRUS 6-14-84
CHK N.JONES 7-3-84
APVD J.GRAY 7-10-84
PRODUCT SPEC 108-1066
APPLICATION SPEC 114-1049
WEIGHT -

AMP Tyco Electronics Corporation Harrisburg, PA 17105

SOCKET ASSY, SIP, 10 POS, DIPLOMATE DL

SIZE A1 CAGE CODE 00779 DRAWING NO C-643642 RESTRICTED TO

CUSTOMER DRAWING SCALE 5:1 SHEET 1 OF 1 REV K1

OBSOLETE
NOT the LATEST REVISION