DRAWING MADE IN THIRD ANGLE PROJECTION
THIS DRAWING IS CONSIDERED RELEASED FOR PUBLICATION , 19
© COPYRIGHT 19 BY AMP INCORPORATED, HARRISBURG, PA. ALL INTERNATIONAL RIGHTS RESERVED. AMP, EXCEPT TO MEET RESPONSIBILITIES TO U.S. AND FOREIGN PATENTS AND/OR PATENTS PENDING.

LOC	DIST
CM	53

REVISIONS

P	F	ZONE	LTR	DESCRIPTION	DATE	APPROVED
			C	REV PER EC 0730-0201-94	4-26-95	JH RS

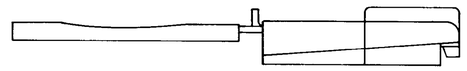

1. SHEET METAL SCREWS NOT SUPPLIED.
2. TWO REQUIRED PER CONNECTOR.
3. MAX WIRE BUNDLE WITHOUT INSERT IS 8 AT .190 DIA, AND MIN WIRE BUNDLE WITH INSERT IS 8 AT .040 DIA.
4. DETACHABLE INSERT MAY SEPARATE FROM STRAIN RELIEF BODY DURING SHIPPING.
5. STYLE II DOES NOT INCLUDE INSERT.

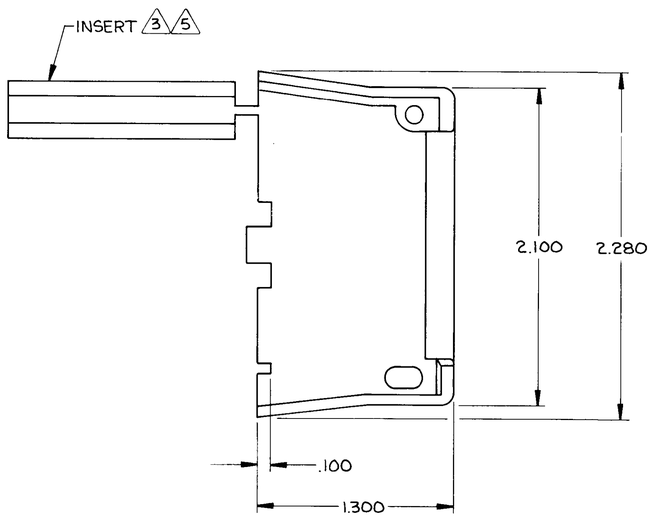

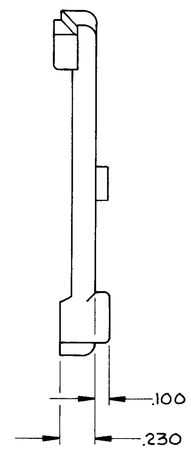

STYLE I

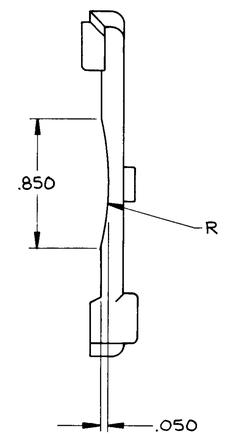

STYLE II

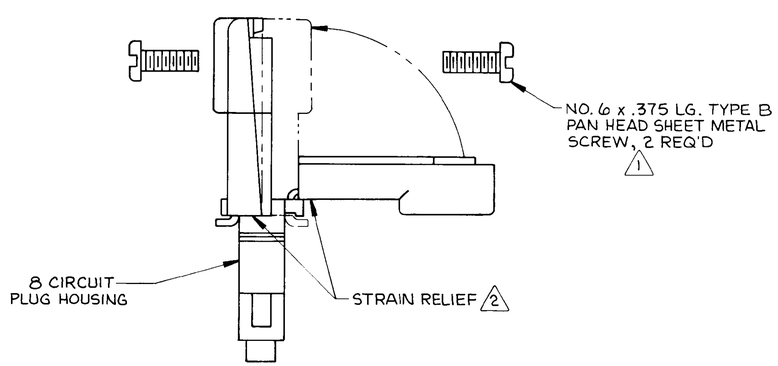

ASSEMBLY INFORMATION

STYLE	PART NO
II	643314-2
I	643314-1

UNLESS OTHERWISE SPECIFIED DIMENSIONS ARE IN INCHES
TOLERANCES ON:
DECIMALS ±.015
ANGLES ±

MATERIAL
NYLON, UL 94V-0

CONTRACT NO
DR K. Wakitaku 9-28-87
CHK R. Sing 9-28-87
APPD L. Larson 9-28-87
APPD
DSGN APPD
OTHER APPD

AMP | AMP INCORPORATED Harrisburg, Pa. 17105

NAME
STRAIN RELIEF AND INSERT, 8 CIRCUIT, UNIVERSAL MATE-N-LOK™

SIZE	FSCM NO	DRAWING NO
D	00779	643314

SCALE 2:1 SHEET 1 OF 1

CUSTOMER DRAWING