THIS DRAWING IS UNPUBLISHED. RELEASED FOR PUBLICATION -,- .
© COPYRIGHT - BY TYCO ELECTRONICS CORPORATION. ALL RIGHTS RESERVED.

LOC	DIST
AJ	16

REVISIONS

P	LTR	DESCRIPTION	DATE	DWN	APVD
	L2	REVISED PER ECO-09-027092	23DEC09	HMR	KW

1. USE WITH HAND TOOL 220190-1
2. CABLE USED WITHOUT SPACER.
3. CABLE USED WITH SPACER.
4. BULK PACKAGE
5. SEE I.S. SHEET 9778

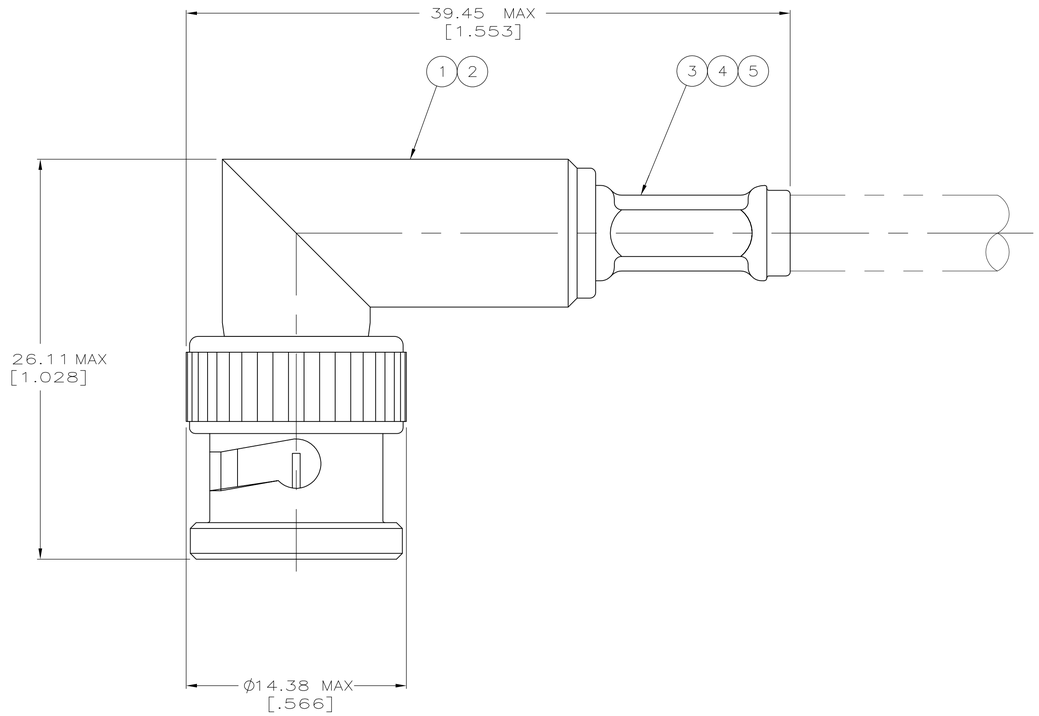

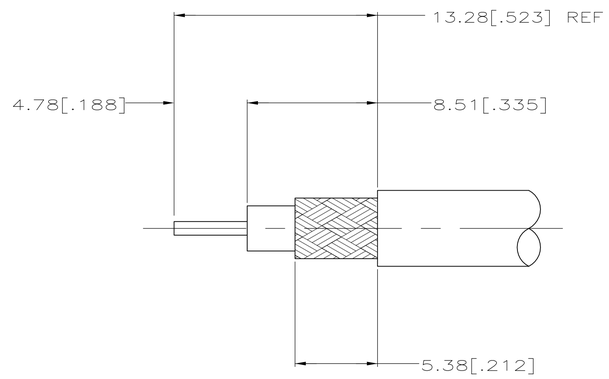

VIEW A

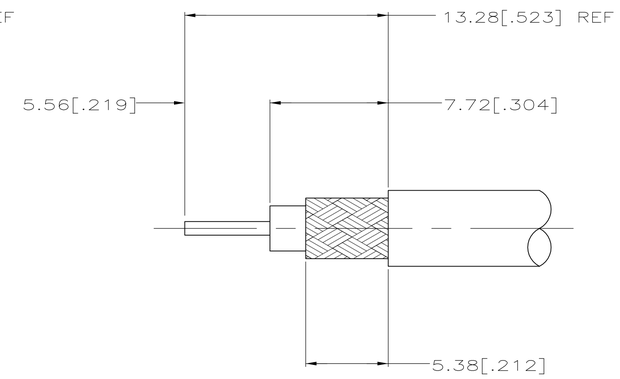

VIEW B

RECOMMENDED STRIP LENGTH

	FOR USE WITH CABLE	VIEW	CONTACT CRIMP (HEX)	FERRULE CRIMP (HEX)	DIE SET 1	5 SPACER QTY=1	4 TUBING, PLASTIC QTY=1	3 FERRULE QTY=1	2 CONTACT QTY=1	1 PLUG ASSY QTY=1	PART NUMBER
SUPERSEDED BY 5413959-3	RG-174/U,188/U & 316/U	A	1.73 [.068]	4.52 [.178]	58465-3	–	227194-1	9-413658-0	1-413774-5	9-413960-1	9-413959-1
SUPERSEDED BY 5413959-1	RG-58/U & BELDEN 88240	A	1.73 [.068]	5.41 [.213]	58465-1	–	–	9-221132-0	413774-5	9-413960-0	9-413959-0
	BELDEN YR15492	A	1.73 [.068]	5.41 [.213]	58465-1	–	–	8-221132-9	413774-5	413960-1	413959-8
OBSOLETE 4	RG-316/U, TYPE DOUBLE BRAID	A	1.73 [.068]	4.52 [.178]	58465-3	–	227194-1	9-413658-2	1-413774-5	413960-3	413959-7
OBSOLETE	RG-141/U,BELDEN 9907 & 89907	A	1.73 [.068]	5.41 [.213]	58465-1	–	–	9-221132-0	2-413774-5	413960-1	413959-6
OBSOLETE	RG-180/U & 195/U	A	1.73 [.068]	4.52 [.178]	58465-3	–	–	9-413658-1	2-413774-0	413960-3	413959-5
OBSOLETE	RG-179/U & 187/U	A	1.73 [.068]	4.52 [.178]	58465-3	–	227194-1	9-413658-0	2-413774-0	413960-3	413959-4
	RG-174/U,188/U & 316/U	A	1.73 [.068]	4.52 [.178]	58465-3	–	227194-1	9-413658-0	1-413774-5	413960-3	413959-3
3	RG-62/U	B	1.73 [.068]	6.48 [.255]	58465-1	227423-1	–	9-221132-1	1-413774-0	413960-2	413959-2
OBSOLETE 2	RG-59/U & BELDEN 88241	A									
OBSOLETE	RG-58/U & BELDEN 88240	A	1.73 [.068]	5.41 [.213]	58465-1	–	–	9-221132-0	413774-5	413960-1	413959-1

THIS DRAWING IS A CONTROLLED DOCUMENT.

DIMENSIONS: INCHES

TOLERANCES UNLESS OTHERWISE SPECIFIED:
0 PLC ± –
1 PLC ± –
2 PLC ± –
3 PLC ± .41[.016]
4 PLC ± –
ANGLES ± –

MATERIAL –
FINISH –

DWN B. WERNER 9-12-90
CHK R. E. RUTH 9-28-90
APVD B. WERNER 9-12-90
PRODUCT SPEC –
APPLICATION SPEC –
WEIGHT –

Tyco Electronics
Tyco Electronics Corporation
Harrisburg, Pa 17105-3608

NAME PLUG,RIGHT ANGLE, 50 OHM, COMMERCIAL BNC

SIZE	CAGE CODE	DRAWING NO	RESTRICTED TO
A1	00779	C-413959	–

CUSTOMER DRAWING

SCALE	SHEET	REV
5:1	1 OF 1	L2