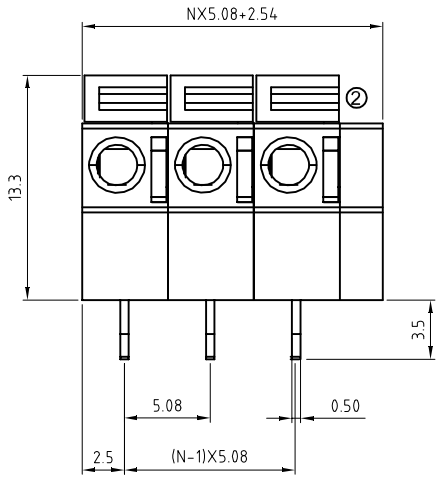

N=Number of contacts

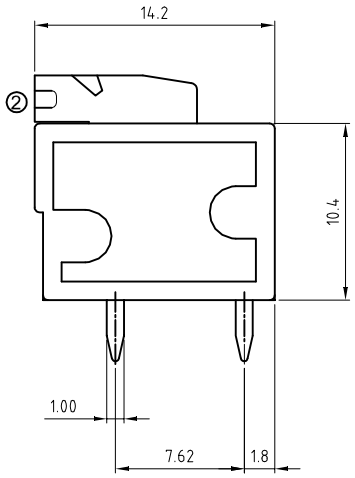

Material

Terminal body(Contact pin):Brass
Wire guard: Stainless steel
Surface of solder tail: Tin plated
Insulator(housing): Thermoplastic (UL94V-0) ,
GREEN(RAL6018/T)

Electrical cULus/VDE

Voltage rating: 300VAC/250VAC
Current rating: 10A/10A
Wire range:0.75-1.5mm²
Solid wire(AWG): 14-24
Stranded wire(AWG): 14-24
Wire strip length: 9-10mm
Withstanding Voltage: 1.6KV/2KV
Operating temperature: -40°C to +115°C
Soldering temperature: 250°C±10°C/5 Sec
Safety Approval: c us VDE

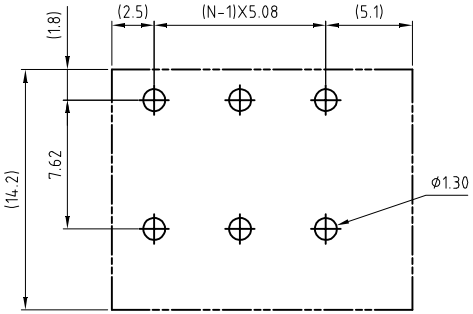

P.C.B. LAYOUT

Poles	Tolerance	
	DIM L	DIM P
2p-6p	±0.20	±0.20
7p-12p	±0.25	±0.25
13p-24p	±0.40	±0.40

RoHS compliant
Unit: mm

③ UL File No.: E349947

Scale	Free
TOLERANCE	
X.	±0.50
X.X	±0.30
X.XX	±0.10
DIM	TOL
X.°	±1°
Angle	TOL

Id.	Modification	Date	Name
③	Add UL File No.	15.03.2016	Winnie
②	Update	17.04.2013	Amy
①	Drawn	10.12.2009	Dean

	Date	Name
Drawn	10.12.2009	Dean
Approved	15.03.2016	Winnie

ASSMANN WSW components

Customer-No.

ASSMANN WSW-No.
A-TB508-HAxxH

Drawing-No.
ASS 3894 CO

rev03

Replace

Sheet