THIS DRAWING IS UNPUBLISHED. RELEASED FOR PUBLICATION -,- .
© COPYRIGHT - By - ALL RIGHTS RESERVED.

| LOC | DIST |
|---|---|
| G | 14 |

REVISIONS

| P | LTR | DESCRIPTION | DATE | DWN | APVD |
|---|---|---|---|---|---|
| | L3 | REVISED PER ECO-11-004917 | 11MAR11 | RK | HMR |

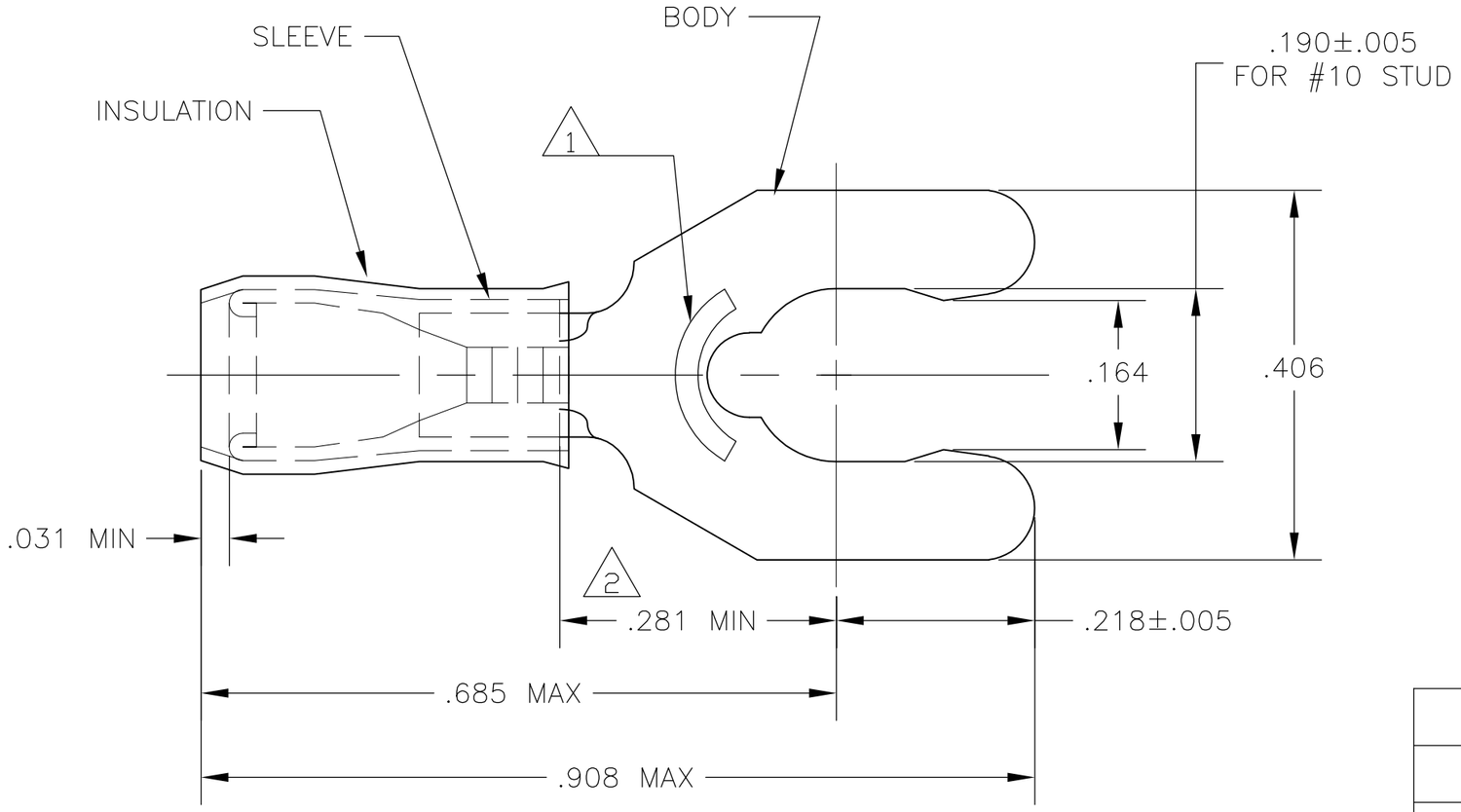


1. STAMP 10S AMP 22-18*, APPROX AS SHOWN. 22-16 TERMINALS ARE STAMPED 22-18 IN ACCORDANCE WITH MILITARY SPEC SAE-AS7928, COMMERCIAL WIRE RANGE IS 22-16.

2. APPLIES FROM EDGE OF METAL WIRE BARREL TO CENTER OF STUD HOLE.

3. TONGUE MATERIAL THK IS .031±.002

4. BODY - PHOS BRONZE PER ASTM B-103
SLEEVE - COPPER PER ASTM B-152
INSULATION - NYLON

5. BODY - TIN PLATE PER ASTM B545
SLEEVE. - TIN PLATE PER ASTM B545
INSULATION - COLOR - RED

| AMP WIRE RANGE | Listed FILE E13288 | LR7189 Certified |
|---|---|---|
| 22-16 AWG SOLID OR STRANDED | 22-16 AWG SOLID OR STRANDED | 22-16 AWG SOLID OR STRANDED |

| WIRE INSULATION OD | QTY | PACKAGE TYPE | PART NO |
|---|---|---|---|
| .080-.125 | 100 | LOOSE PIECE, BOX | 8-52931-1 |
| .080-.125 | BULK | LOOSE PIECE | 8-52931-0 |
| .105-.140 | 5000 | ON TAPE, REEL | 52931-3 |
| OBSOLETE ~~.105-.140~~ | ~~1000~~ | ~~LOOSE PIECE~~ | ~~52931-2~~ |
| .080-.125 | 5000 | ON TAPE, REEL | 52931-1 |
| .080-.125 | 1000 | LOOSE PIECE | 52931 |

CUSTOMER SERVICE SYSTEMS

| | |
|---|---|
| FOR ADDITIONAL PRODUCT INFORMATION OR COPIES OF DRAWINGS AND TECHNICAL DOCUMENTS | PRODUCT INFORMATION CENTER 1-800-522-6752 |
| FOR APPLICATION TOOLING INFORMATION | TOOLING ASSISTANCE CENTER 1-800-722-1111 |
| FOR ORDER ENTRY | 1-800-526-5142 |

MAX RECOMMENDED OPERATING TEMPERATURE: 105°C

VOLTAGE RATING: 300 V MAX

CIRCULAR MIL AREA: 0.26-1.65mm² [509-3260] SOLID OR STRANDED

THIS DRAWING IS A CONTROLLED DOCUMENT FOR AMP INCORPORATED. IT IS SUBJECT TO CHANGE AND THE CONTROLLING ENGINEERING ORGANIZATION SHOULD BE CONTACTED FOR THE LATEST REVISION.

THIS DRAWING IS A CONTROLLED DOCUMENT.

DIMENSIONS: INCHES

TOLERANCES UNLESS OTHERWISE SPECIFIED:
0 PLC ± -
1 PLC ± -
2 PLC ± -
3 PLC ± .008
4 PLC ± -
ANGLES ± 5°

MATERIAL 4

FINISH 5

| | | |
|---|---|---|
| DWN | jr ruth | 18MAR10 |
| CHK | T MICHIELUTTI | 18MAR10 |
| APVD | T MICHIELUTTI | 18MAR10 |
| PRODUCT SPEC | — | |
| APPLICATION SPEC | — | |
| WEIGHT | — | |

TE Connectivity

NAME: TERMINAL, SHORT SPRING SPADE, PIDG, WIRE SIZE: 22-16 AWG

| SIZE | CAGE CODE | DRAWING NO | RESTRICTED TO |
|---|---|---|---|
| A3 | 00779 | C-52931 | — |

CUSTOMER DRAWING | SCALE 6:1 | SHEET 1 OF 1 | REV L3

1470-19 (3/11)