THIS DRAWING IS UNPUBLISHED. RELEASED FOR PUBLICATION – –, .
© COPYRIGHT – BY TYCO ELECTRONICS CORPORATION. ALL RIGHTS RESERVED.

LOC	DIST
G	14

REVISIONS

P	LTR	DESCRIPTION	DATE	DWN	APVD
	L2	REV PER ECR 06-025564	31OCT06	JR	TM

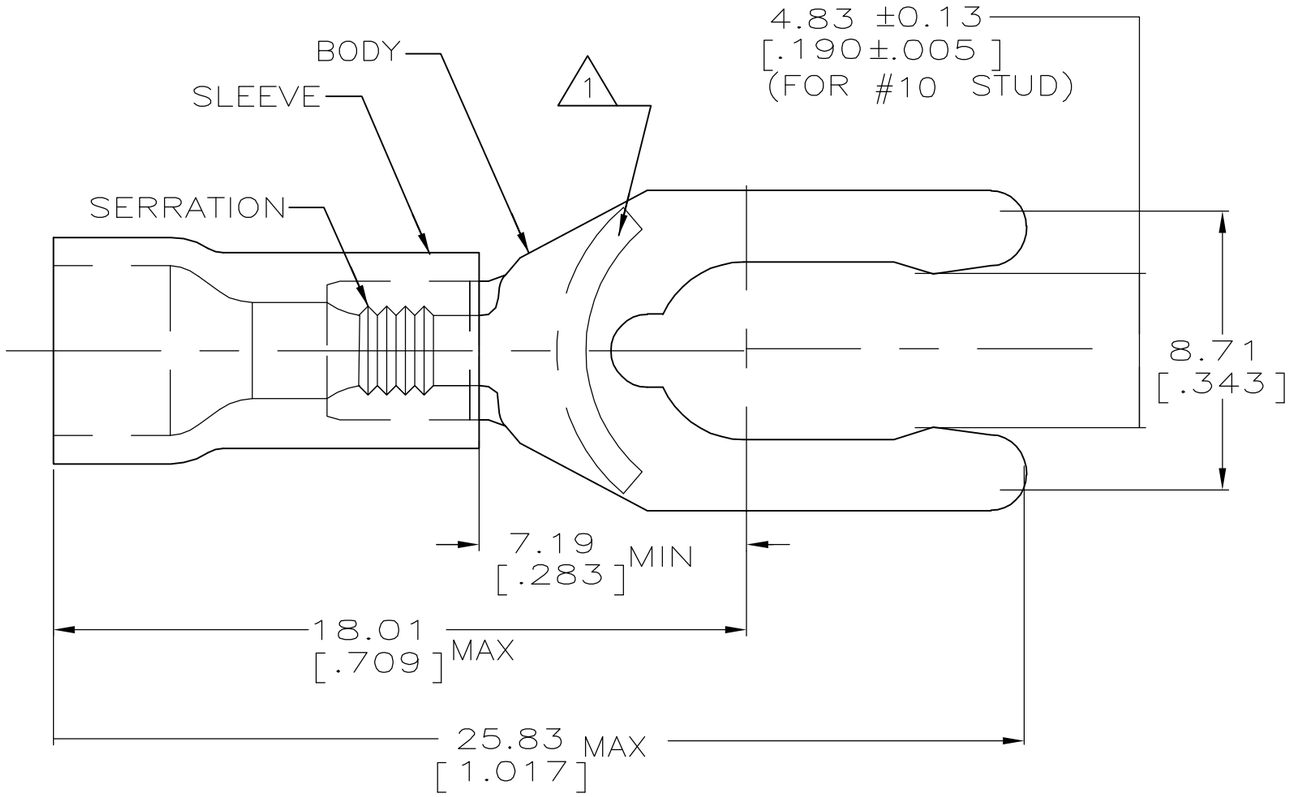

AMP WIRE RANGE	Listed FILE E13288	LR7189 Certified
22–16 AWG SOLID OR STRANDED	22–16 AWG SOLID OR STRANDED	22–16 AWG SOLID OR STRANDED

1. STAMP 10S AMP 22–18*APPROX AS SHOWN 22–16 TERMINALS ARE STAMPED 22–18 IN ACCORDANCE WITH MILITARY SPEC MIL–T–7928 COMMERCIAL WIRE RANGE IS 22–16
2. WIRE INSUL DIA, 2.67–3.56 [.105–.140]
3. TONGUE MATL THK, 0.79±0.05 [.031±.002]
4. MATERIAL: BODY – BRASS PER ASTM B36
   SLEEVE – PVC, COLOR – RED

QTY	PACKAGE TYPE	PART NO
100	LOOSE PIECE,BOX	8–52455–1
5000	ON TAPE, REEL	52455–1
1000	LOOSE PIECE	52455

AMP INCORPORATED
CUSTOMER SERVICE SYSTEMS

FOR ADDITIONAL PRODUCT INFORMATION OR COPIES OF DRAWINGS AND TECHNICAL DOCUMENTS	PRODUCT INFORMATION CENTER 1–800–522–6752
FOR APPLICATION TOOLING INFORMATION	TOOLING ASSISTANCE CENTER 1–800–722–1111
FOR ORDER ENTRY	1–800–526–5142

THIS DRAWING IS A CONTROLLED DOCUMENT FOR AMP INCORPORATED. IT IS SUBJECT TO CHANGE AND THE CONTROLLING ENGINEERING ORGANIZATION SHOULD BE CONTACTED FOR THE LATEST REVISION.

MAX RECOMMENDED OPERATING TEMPERATURE: 105°C [221°F]

VOLTAGE RATING: 600V MAX (1000V FIXTURE OR SIGN)

CIRCULAR MIL AREA: 0.26–1.65mm² [509–3260] SOLID OR STRANDED

THIS DRAWING IS A CONTROLLED DOCUMENT.

DIMENSIONS: mm[INCHES]

TOLERANCES UNLESS OTHERWISE SPECIFIED:

0 PLC	± –
1 PLC	± –
2 PLC	± 0.20 [.008]
3 PLC	± –
4 PLC	± –
ANGLES	± –

MATERIAL – 4

FINISH: TIN PER ASTM B545

DWN	L OLMEDA	26JUN95
CHK	M ELLIS	26JUN95
APVD	G NGO	26JUN95

PRODUCT SPEC: UL 486A

APPLICATION SPEC: –

WEIGHT: –

tyco Electronics — Tyco Electronics Corporation, Harrisburg, Pa 17105–3608

NAME: TERMINAL, SPRING SPADE, LONG, PLASTI–GRIP, WIRE SIZE: 22–16 AWG

SIZE	CAGE CODE	DRAWING NO	RESTRICTED TO
A3	00779	C–52455	–

CUSTOMER DRAWING | SCALE 6:1 | SHEET 1 OF 1 | REV L2