THIS DRAWING IS UNPUBLISHED RELEASED FOR PUBLICATION 2018
© COPYRIGHT 2018 BY - TE CONNECTIVITY ALL RIGHTS RESERVED.

REVISIONS

P	LTR	DESCRIPTION	DATE	DWN	APVD
	C1	REVISED PER PCN E-18-015129	13DEC2018	SS	DM
	C2	DRAWING UPDATED	12MAR2024	RK	CB

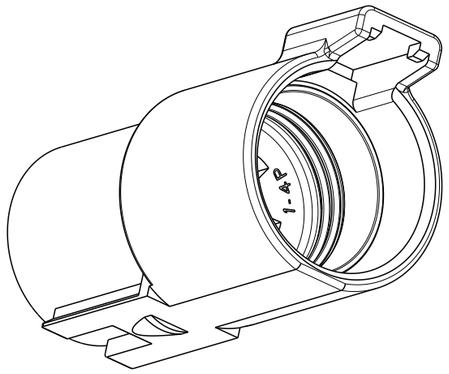

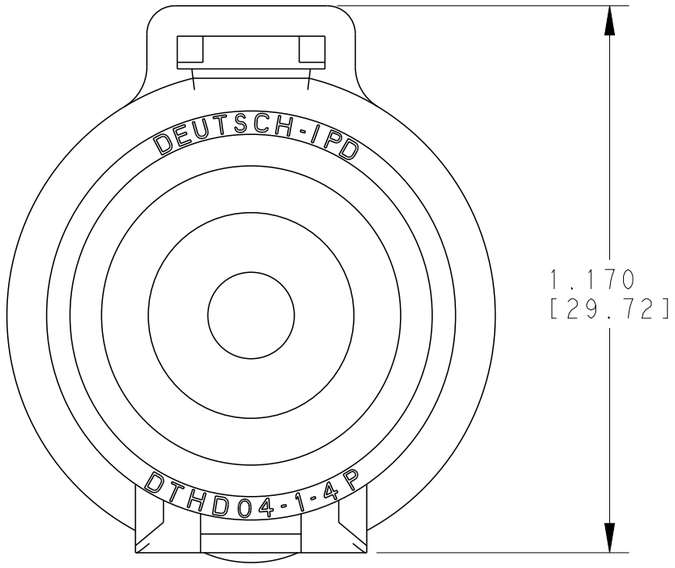

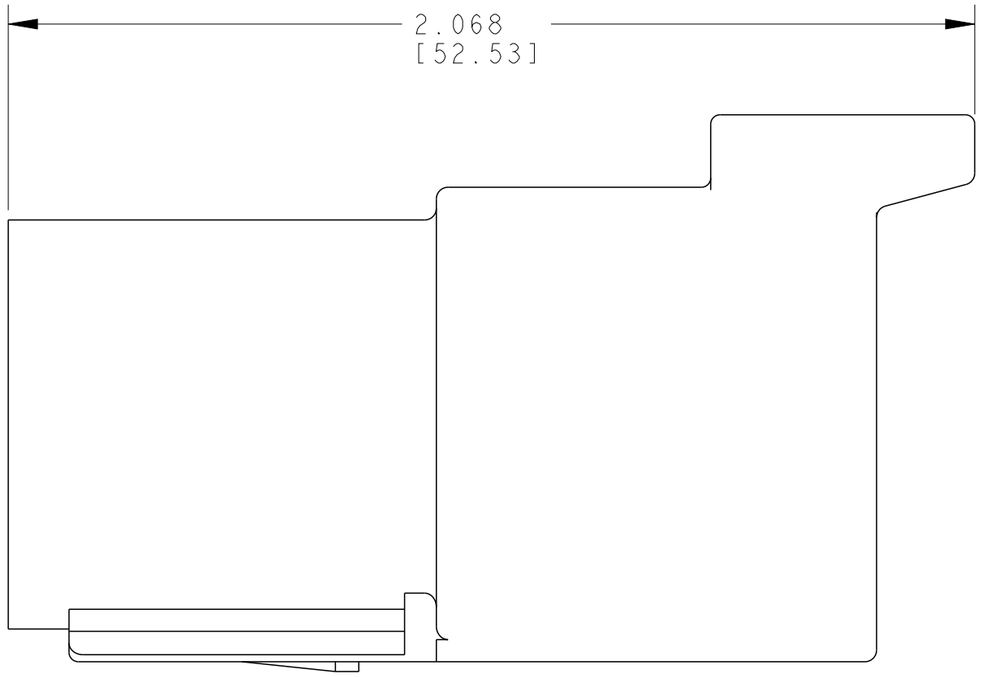

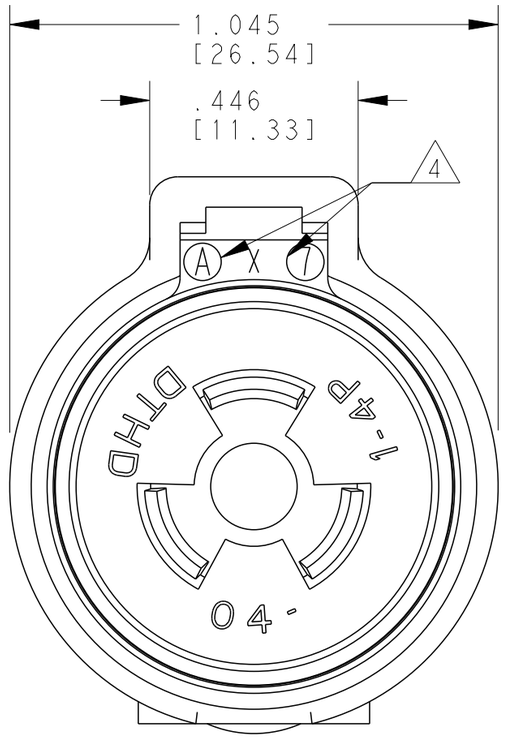

TE INTERNAL PN	DEUTSCH PN
DTHD04-1-4P	DTHD04-1-4P

WIRE INSULATION DIA		
CONTACT SIZE	MINIMUM O.D.	MAXIMUM O.D.
4	.261 [6.63]	.420 [10.67]

4. DATE CODE: MONTH IS REPRESENTED BY SEQUENTIAL ALPHA CHARACTERS. EX: A = JANUARY. YEAR IS REPRESENTED BY LAST NUMERIC DIGIT. EX: 7 = 2007.

3. MATERIAL: RECEPTACLE: PEI (BLACK); WELD RING: PEI (BLACK); INTERFACE SEAL: VMQ (RED-ORANGE)

2. THIS RECEPTACLE MATES WITH DTHD06-1-4S-XXXX PLUG. (XXXX = ALL MODIFICATIONS)

1. FOR CONTACT AND WIRE PERFORMANCE AND APLICATION CHARACTERISTIC SEE CUSTOMER DRAWING 0425-015-0000.

NOTES: UNLESS OTHERWISE SPECIFIED.

THIS DRAWING IS A CONTROLLED DOCUMENT.

DIMENSIONS: INCHES[mm]

TOLERANCES UNLESS OTHERWISE SPECIFIED:
0 PLC ±-
1 PLC ±-
2 PLC ±-
3 PLC ±.025 [0.64]
4 PLC ±-
ANGLES ±0°30'0"

MATERIAL 3

FINISH - -

DWN R.OCHOA 08MAR1999
CHK D.MEYER 20JUN2004
APVD D.MEYER 21JUN2004
PRODUCT SPEC 108-151020
APPLICATION SPEC 114-151020
WEIGHT 14.2 g

TE Connectivity

NAME RECEPTACLE #4 HD CONTACT
DTHD SERIES
COLOR: BLACK

SIZE	CAGE CODE	DRAWING NO	RESTRICTED TO
A3	4AFU8	C-DTHD04-1-4P	

CUSTOMER DRAWING SCALE 3:1 SHEET 1 OF 1 REV C2

1470-19 (3/13)