DWG. NO. SD-5597-005

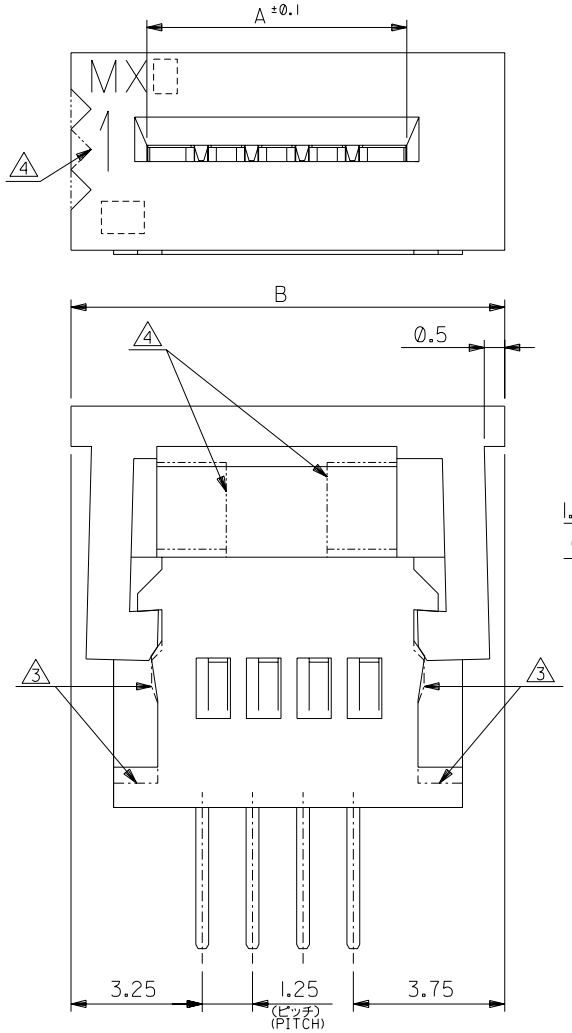

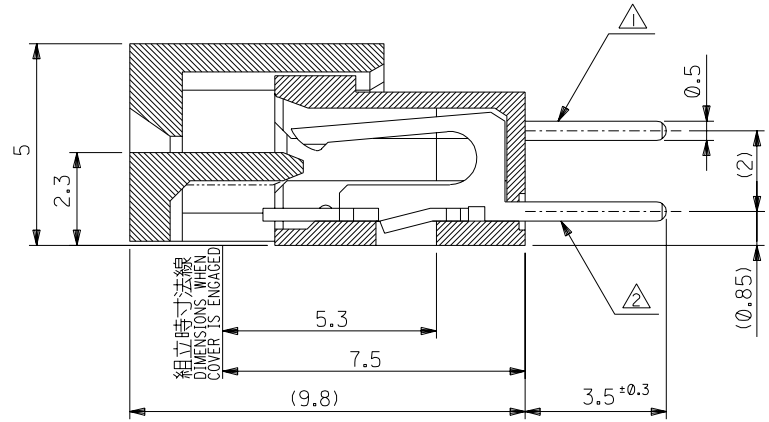

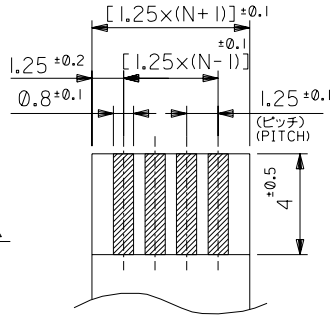

適合ＦＰＣ／ＦＦＣ推奨寸法
RECOMMENDED FPC/FFC
厚さ THK ：0.3 ±0.05 (SCALE 5:1)

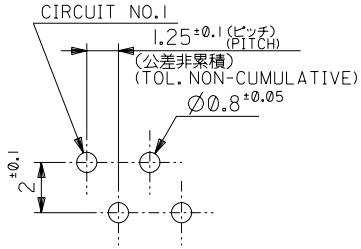

基板取付穴推奨寸法 (t=1.6)
RECOMMENDED P.C. BOARD HOLE DIMENSION (SCALE 5:1)

6. ソルダーテールは、先端が取付推奨穴にガイドされること。ガイドされること。
SOLDER TAILS MAY BE CHECKEDBY INSERSION FOR RECOMMENDED PCB BOARD HOLES.

48.25	43.95	39-51-3344	5597-34CPB	34
47	42.7	-3334	-33CPB	33
45.75	41.45	-3324	-32CPB	32
44.5	40.2	-3314	-31CPB	31
43.25	38.95	-3304	-30CPB	30
42	37.7	-3294	-29CPB	29
40.75	36.45	-3284	-28CPB	28
39.5	35.2	-3274	-27CPB	27
38.25	33.95	-3264	-26CPB	26
37	32.7	-3254	-25CPB	25
35.75	31.45	-3244	-24CPB	24
34.5	30.2	-3234	-23CPB	23
33.25	28.95	-3224	-22CPB	22
32	27.7	-3214	-21CPB	21
30.75	26.45	-3204	-20CPB	20
29.5	25.2	-3194	-19CPB	19
28.25	23.95	-3184	-18CPB	18
27	22.7	-3174	-17CPB	17
25.75	21.45	-3164	-16CPB	16
24.5	20.2	-3154	-15CPB	15
23.25	18.95	-3144	-14CPB	14
22	17.7	-3134	-13CPB	13
20.75	16.45	-3124	-12CPB	12
19.5	15.2	-3114	-11CPB	11
18.25	13.95	-3104	-10CPB	10
17	12.7	-3094	-09CPB	9
15.75	11.45	-3084	-08CPB	8
14.5	10.2	-3074	-07CPB	7
13.25	8.95	-3064	-06CPB	6
12	7.7	-3054	-05CPB	5
10.75	6.45	-3044	-04CPB	4
9.5	5.2	39-51-3034	5597-03CPB	3
B	A	ENG. NO.	ENG. NO.	極数

注記 NOTES

1. ＭＸＪ側を基準に奇数番目の極におけるソルダーテール。
SOLDER TAIL OF ODD CKTS,MXJ MARK AS BASIC.
2. ＭＸＪ側を基準に偶数番目の極におけるソルダーテール。
SOLDER TAIL OF EVEN CKTS,MXJ MARK AS BASIC.
3. ３極～１０極に適用。APPLY FOR 3-10 CKTS.
4. ３極～１９極に適用。APPLY FOR 3-19 CKTS.
5. (　　)内寸法は、参考値。
(　)DIMENSION IS FOR REFERENCE.

DO NOT SCALE DRAWING

284NO. DRWN: CH'K: APPR:	283NO. DRWN: CH'K: APPR:	282NO. DRWN: CH'K: APPR:	281NO. DRWN: CH'K: APPR:

再作図及び変更
REDRAWN & REVISED
280NO.J2003-2624
DRWN: K.TOJO '03/04/17
CH'K: H. Sasao '03/04/17
APPR: H. Sasao '03/04/17

DESCRIPTION

REV

MATERIAL 材料: HOUSING, ACTUATOR : PBTP, UL94V-0
TERMINAL : PHOSPHOR-BRONZE THK : 0.3t

FINISH 仕上げ: TIN-LEAD(9:1)3～5MICRON METER OVER COPPER 1～2.5 MICRON METER PLATING.

WIRE RANGE 適用電線範囲: —//—

INS. RANGE 被覆外径: —//—

GENERAL TOLERANCES: (UNLESS SPECIFIED) 一般公差

10 UNDER 未満		±0.2
10 OVER 以上	30 UNDER 未満	±0.25
30 OVER 以上		±0.3
ANGLE 角度		±3°

SCALE: —//—
DESIGN UNITS: ☒mm ☐INCH
THIRD ANGLE PROJECTION
DIMENSIONS: ☐mm/INCH ☐INCH/mm ☒mm ONLY
SHT | REV
REVISE ON CAD ONLY

DRAWN BY & DATE: K.TOJO '03/04/15
CHECKED BY & DATE: H. Sasao '03/04/17
APPROVED BY & DATE: H. Sasao '03/04/17

TITLE: 1.25 FPC Conn Assy ZIF

molex MOLEX INCORPORATED

CAD FILENAME: SD-5597-005.S01
MATERIAL NO.: 39-51-3**3
DRAWING NO.: SD-5597-005
SHEET NO.: 1 OF 1

THIS DRAWING CONTAINS INFORMATION THAT IS PROPRIETARY TO MOLEX INCORPORATED AND SHOULD NOT BE USED WITHOUT WRITTEN PERMISSION.

SIZE B

SD-5597-005.S01

EN-02J(097) MXJ-54