THIS DRAWING IS UNPUBLISHED. RELEASED FOR PUBLICATION -,- .
© COPYRIGHT - By - ALL RIGHTS RESERVED.

REVISIONS

P	LTR	DESCRIPTION	DATE	DWN	APVD
	H1	REVISED PER ECR-15-017026	27NOV15	L.P	T.D
	H2	REVISED PER ECR-16-005841	15APR16	L.P	T.D

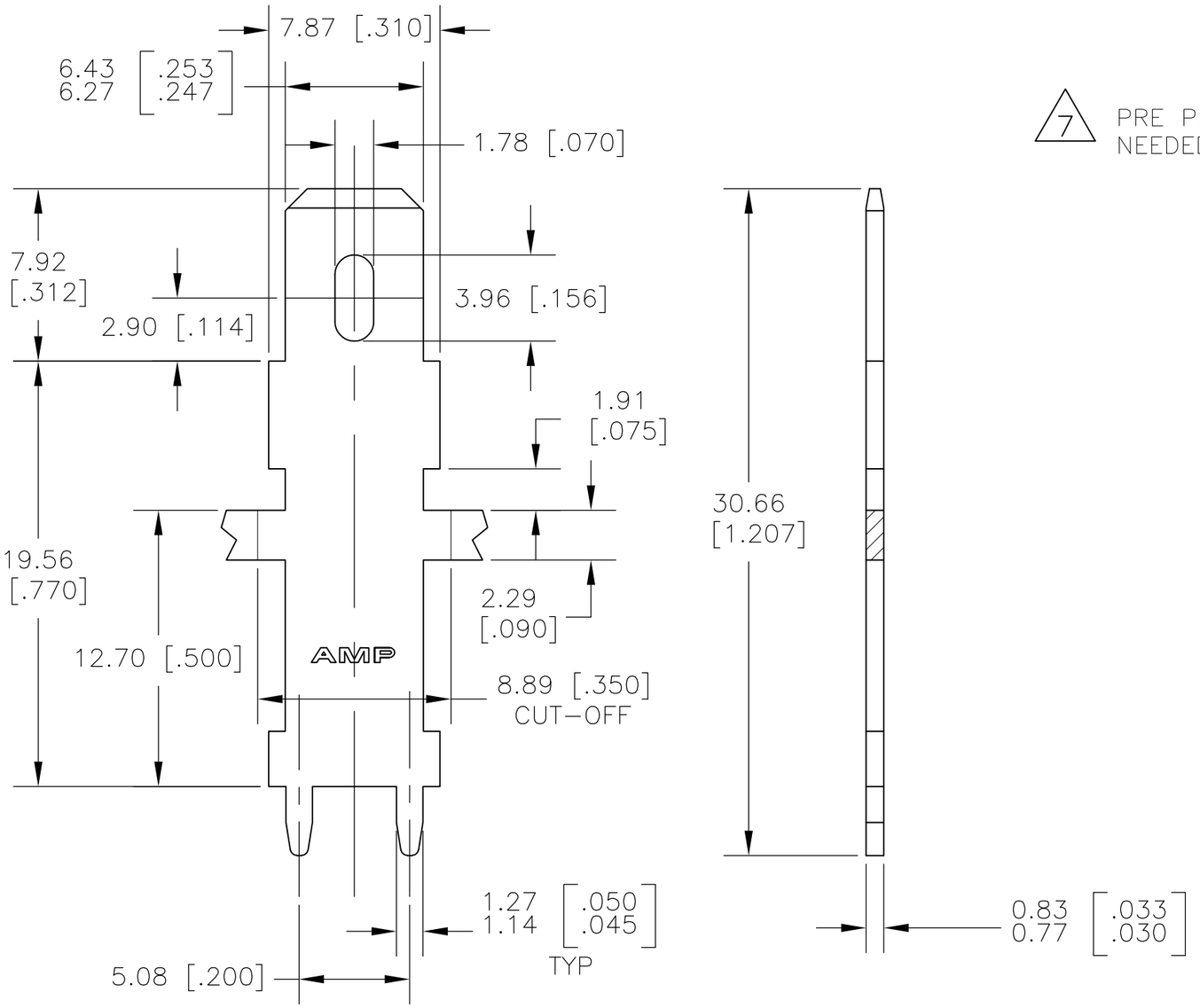

7 PRE PRODCUTION,FASR NEEDED.

1 CONTINUOUS STRIP ON REELS

2 FEED IS 8.89±0.076 [.350±.003].

3 0.00381 [.000150] MIN TIN OVER 0.00127 [.000050] MIN NICKEL.

4 REELED WITH INTERLEAVING PAPER

5 PRELIMINARY – NOT FOR PRODUCTION

6 LOOSE PIECE STYLE

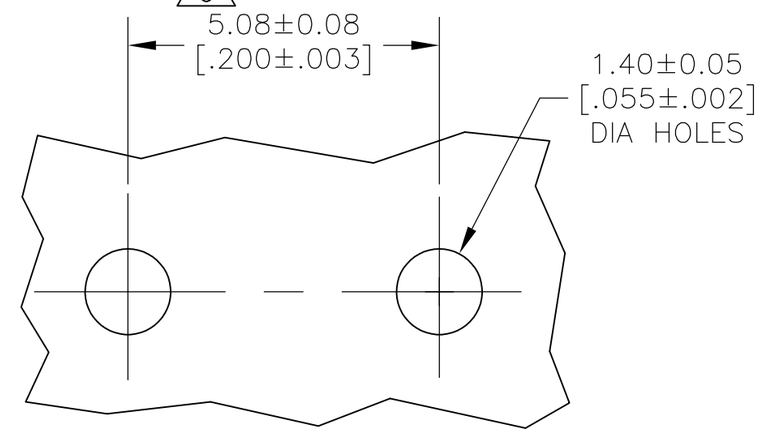

P.C.BOARD HOLES
SCALE 10:1

	MATERIAL		PART NO.
6	BRASS	7	63950-4
4	BRASS	5	63950-3
	BRASS	5	63950-2
	BRASS		63950-1

THIS DRAWING IS A CONTROLLED DOCUMENT.

DIMENSIONS: MM [INCHES]

TOLERANCES UNLESS OTHERWISE SPECIFIED:
0 PLC ± –
1 PLC ± –
2 PLC ± 0.25 [.010]
3 PLC ± –
4 PLC ± –
ANGLES ± –

MATERIAL: SEE TABLE

FINISH: – 3

DWN JR RUTH 05DEC00
CHK MS FEHER 05DEC00
APVD G PORTA 05DEC00
PRODUCT SPEC —
APPLICATION SPEC 114-2115
WEIGHT 0.000000
CUSTOMER DRAWING

TE Connectivity

NAME: TAB, FASTON, P.C. BOARD, 6.35 [.250] SERIES

SIZE	CAGE CODE	DRAWING NO	RESTRICTED TO
A3	00779	C-63950	—

SCALE 4:1 SHEET 1 OF 1 REV H2