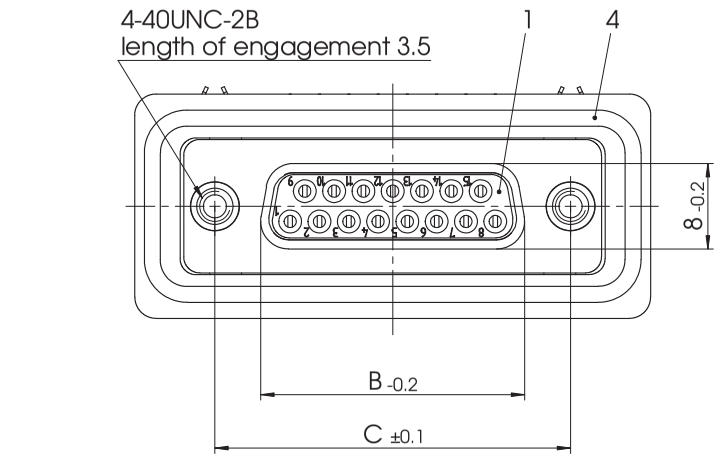

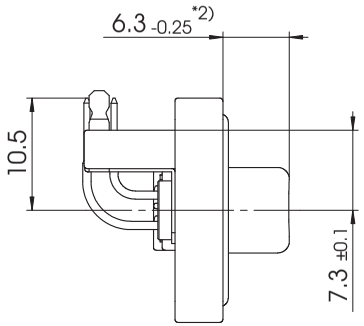

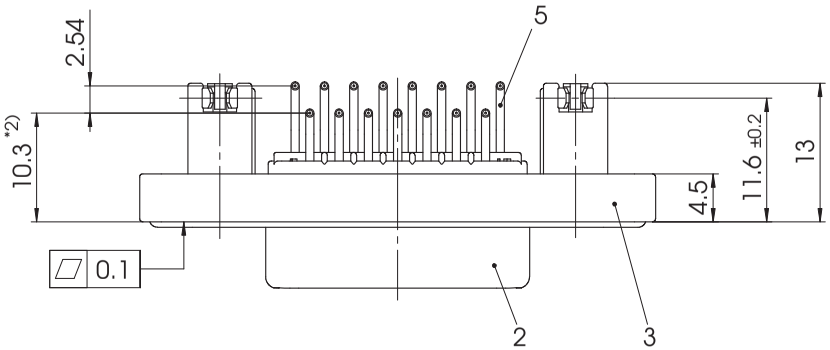

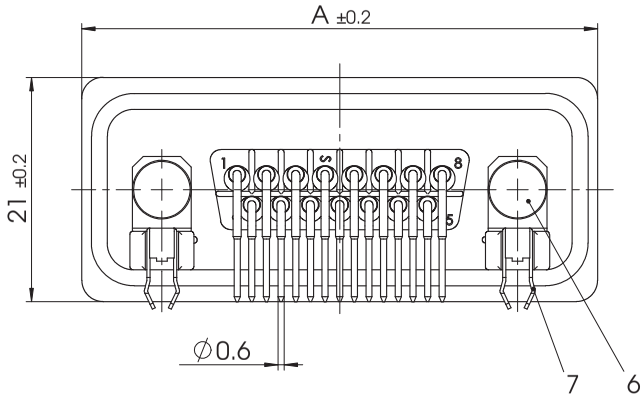

FWDRxx *1) S25A

e.g. FWDR15S25A

*1) xx No. of contacts 09, 15 or 25

xx	A mm	B mm	C mm	*øE mm	*øF mm	*G mm	*H mm	*J mm
09	40	16.4	25	ø1	ø3	6.3	5	2.54
15	48.3	24.7	33.3					
25	62	38.5	47.04					

*PCB hole patterns, øE, øF, G, H and J on supplement AM0024

*2) Dimension starts from front surface of shell (Part-No. 2)

max. torque are 40 Ncm
D-Sub connector with watertight frame,
Protection standard IP67, 100% checked
according to DIN EN 60529 (compl. mounted)

No.	St.	Part	Type Description/Material	Surface plating/Colour/Class
7	2	Snap-in bracket	PCB 1.6mm / Bronze	tin plated
6	2	Clinch nut	WD 4-40 / Brass	tin plated
5	xx	Signal contact	S25 / Brass	AuroPur / 0.1-0.2µm Au
4	1	O-ring seal	Silicone / UL94V-0	red
3	1	Watertight frame	PBT	black
2	1	Shell	Brass	tin plated
1	1	Insulator	PBT (-25°C - +70°C)	red

Measurement without tolerance acc. to ISO 2768-m	SCALE 2:1	TITLE	Waterproof Connector System	
	NAME / DATE			
DRAWN	tatjana.schneider 10-07-2013			
CHECKED	Anke.Meyer-Richter 11-07-2013			
FCT group fctgroup.com		DWG.NO.	FWDRxxS25A	REV. 1
REV. 1	DATE	CH.-NO.	ORIGINAL: DIN A3-DRAWING AS A FILE	REPLACEMENT FOR:
				PAGES 1

COMMENT:
ALL RIGHTS ARE RESERVED BY US FOR THIS DRAWING, WITHOUT OUR PRIOR CONSENT,
IT MAY NEITHER BE DUBLICATED NOR MADE AVAILABLE TO A THIRD PARTY,
AND IT ALSO MAY NOT BE IMPROPERLY USED BY TE RECEIVER, OR A THIRD PARTY.