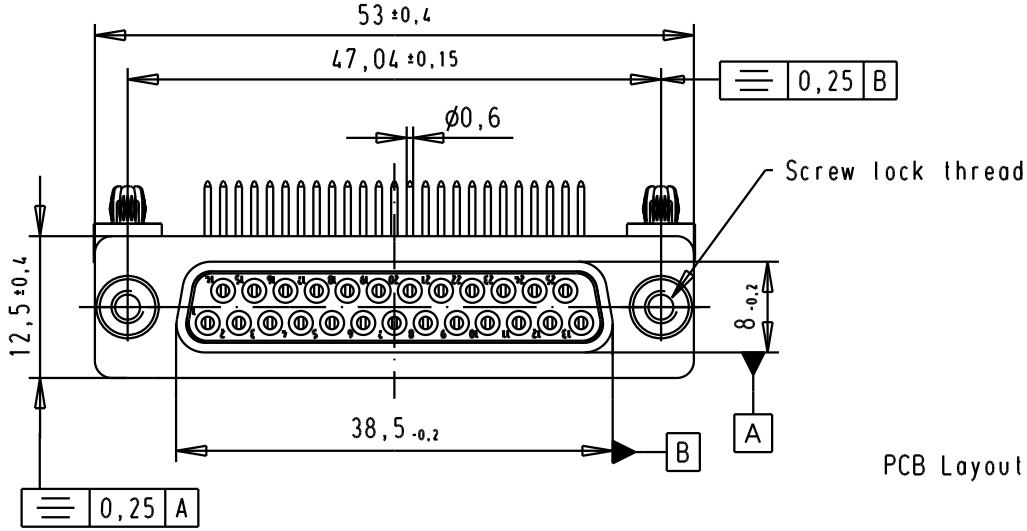

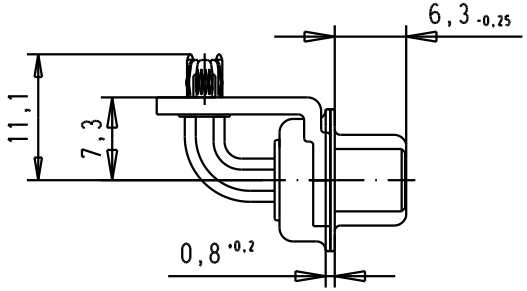

SPECIFICATION

Mating Cycles	500
Filter type	C
Capacitance	3900pf ±20%
Working Voltage	100v
Current Rating	7.5A
Insulation Resistance	>1GΩ

FREQUENCY (MHz)	ATTENUATION (dB)
5	6dB
10	11dB
50	25dB
100	35dB
500	35dB
1000	32dB

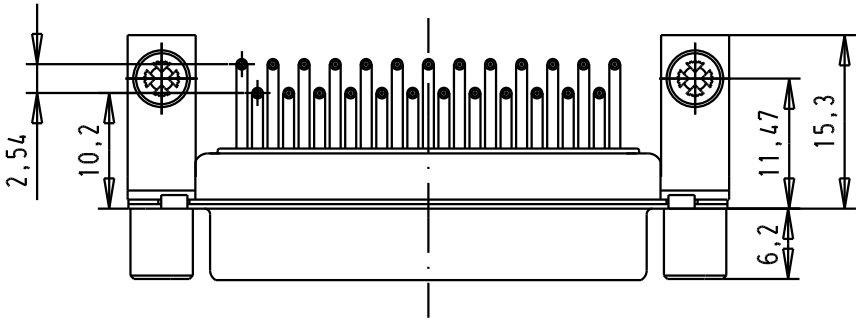

PCB Layout, Component side, thickness 1,6 mm

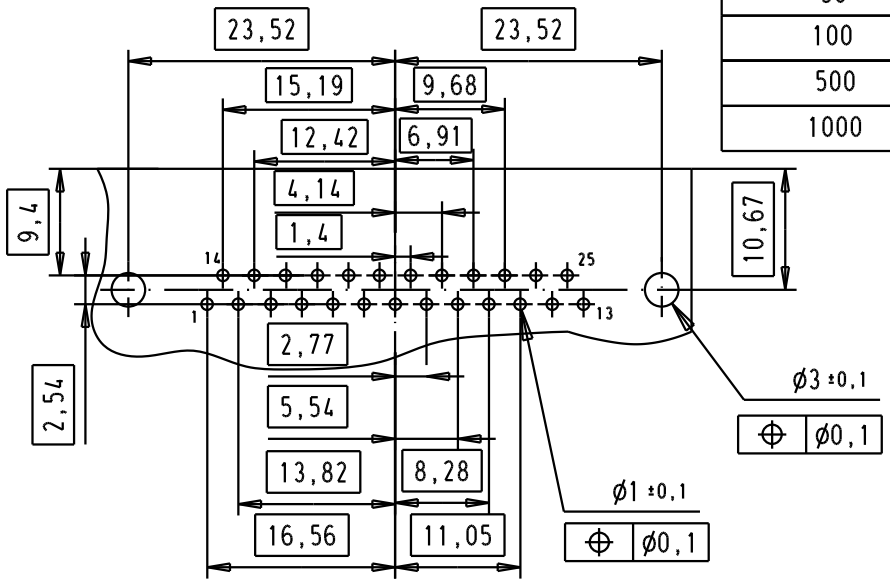

							Dat.	Name			
						Detail.	8-JUL-02	CV	All Dim. in mm Orig. Size DIN A 4	D-Sub, female, angled, 25 Poles, turned solder pins, tin plated shell with brackets, board-locks and screw-locks	Ma?Mstab/ Scale 1.5:1
						Insp.					
						Stand.					
09643147245	M3		33416	19/01/06	JMDR	HARTING EURL F-95972 Paris				TB 0964314724x	Blatt/ Page 2/4
09643147244	UNC 4-40		31058	8-JUL-02	CV						
Part number	Screw lock thread		Mod.	Dat.	Name					Sub.	