DRAWING MADE IN THIRD ANGLE PROJECTION
THIS DRAWING IS UNPUBLISHED. | RELEASED FOR PUBLICATION ,19 .
© COPYRIGHT 19 BY AMP INCORPORATED. ALL INTERNATIONAL RIGHTS RESERVED.

LOC	DIST	P	F	REVISIONS				
				ZONE	LTR	DESCRIPTION	DATE	APPD
AR	35				0	RLSE PER NPR 4310 WAS 92-5730-2	8-14-92	–
					A	REV PER EC 0020-1041-93	12/03/93	JS

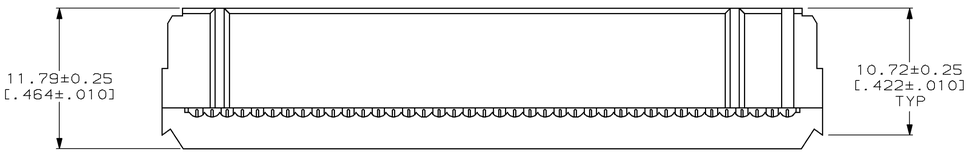

TERMINATED VIEW

1. POLYESTER PBT, BLACK, UL RATED 94V-1 OR BETTER.
2. PHOSPHOR BRONZE PER QQ-B-750.
3. 0.38µm [.000015] MIN GOLD ON LOCALIZED GOLD PLATE AREA, 2.54µm [.000100] MIN TIN-LEAD ON TERMINATION END, ALL OVER 1.27µm [.000050] MIN NICKEL ON ENTIRE CONTACT.

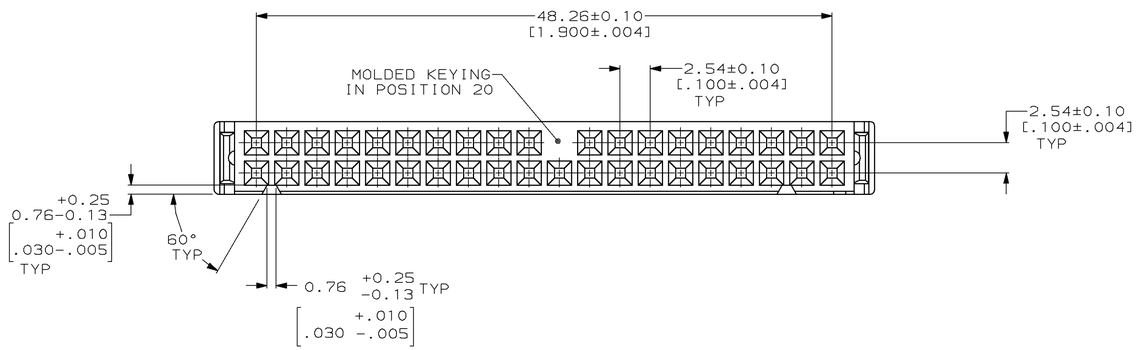

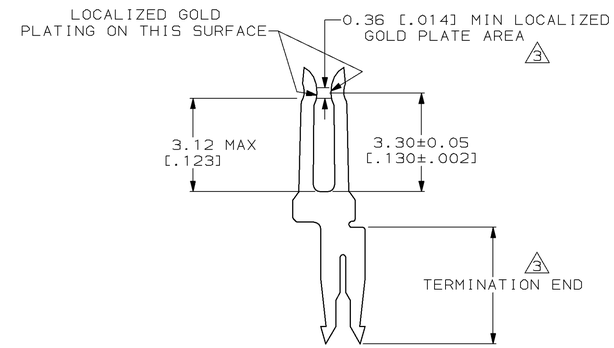

DETAIL Z
SCALE 10:1
TYPICAL

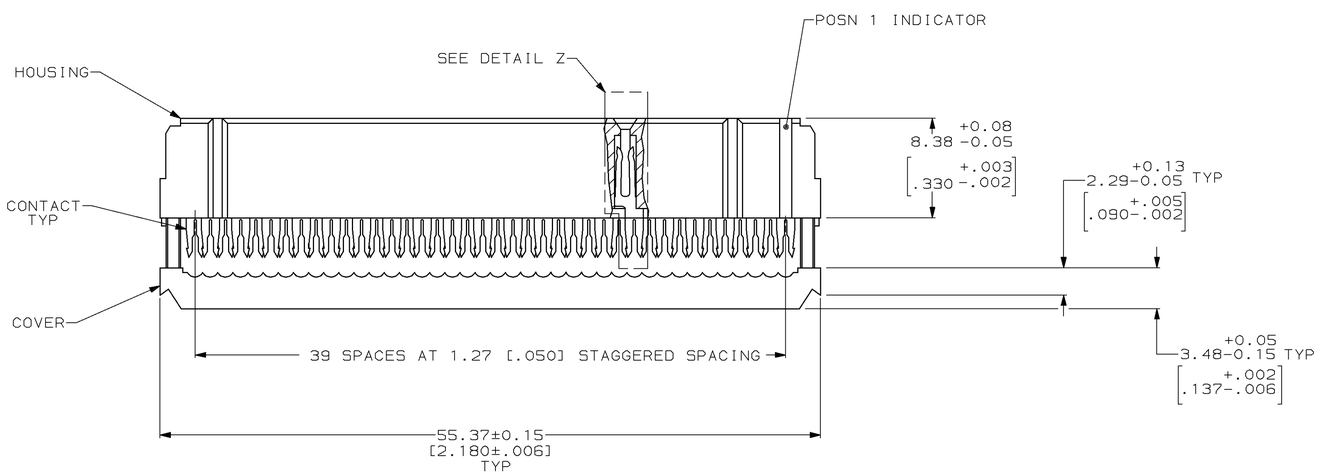

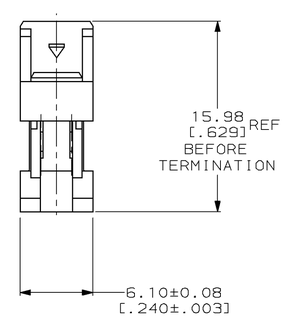

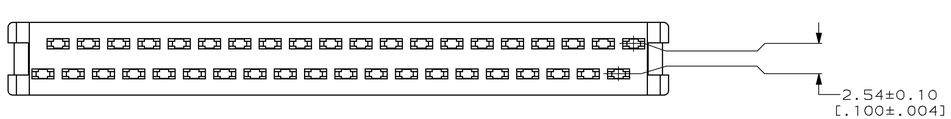

NO OF POSN	PART NO
40	111655-1

DO NOT SCALE PRINT.
UNLESS SPECIFIED
DIMENSIONS IN mm [INCHES]
TOLERANCES ON :
2 PLC DEC ±0.13[.005]
3 PLC DEC ± -
ANGLES ± 4°

MATERIAL
HOUSING & COVER: 1
CONTACTS: 2

FINISH
CONTACTS: 3

DR 8-14-92 H MOLL	
CHK 8-17-92 R STONE	
APPD 8-17-92 J STINE	
APPD 8-17-92 D HOFFMAN	
PRODUCT SPEC 108-40000	
APPLICATION SPEC 114-40005	
WEIGHT –	

AMP Incorporated
Harrisburg, PA 17105-3608

NAME
RECEPTACLE ASSY, MILITARY POLARIZATION, NOVO, AMP-LATCH™

SIZE	CAGE CODE	DRAWING NO
D	00779	C- 111655
SCALE 4:1		SHEET 1 OF 1

THIS DRAWING IS A CONTROLLED DOCUMENT FOR AMP INCORPORATED. IT IS SUBJECT TO CHANGE AND THE CONTROLLING ENGINEERING ORGANIZATION SHOULD BE CONTACTED FOR THE LATEST REVISION.

CUSTOMER DRAWING