MALE END VIEW	FEMALE END VIEW	PANEL CUT-OUT
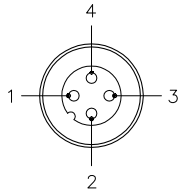	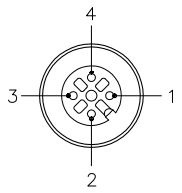	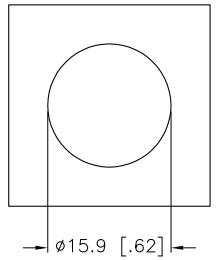

SPECIFICATIONS	
CONTACT CARRIER MATERIAL	NYLON OR TPU
CONTACT MATERIAL/PLATING	BRASS/GOLD
HOUSING MATERIAL/PLATING	BRASS/NICKEL
RATED CURRENT [A]	4.0 A
RATED VOLTAGE [V]	150 V
TEMPERATURE RANGE	−40°C to +80°C (−40°F to +176°F)
PROTECTION CLASS	MEETS NEMA 1,3,4,6P AND IEC IP68
GASKET MATERIAL	NITRILE (BUNA N)
ISOLATOR MATERIAL	NYLON

WIRING DIAGRAM

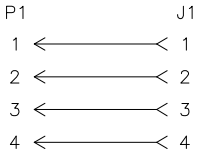

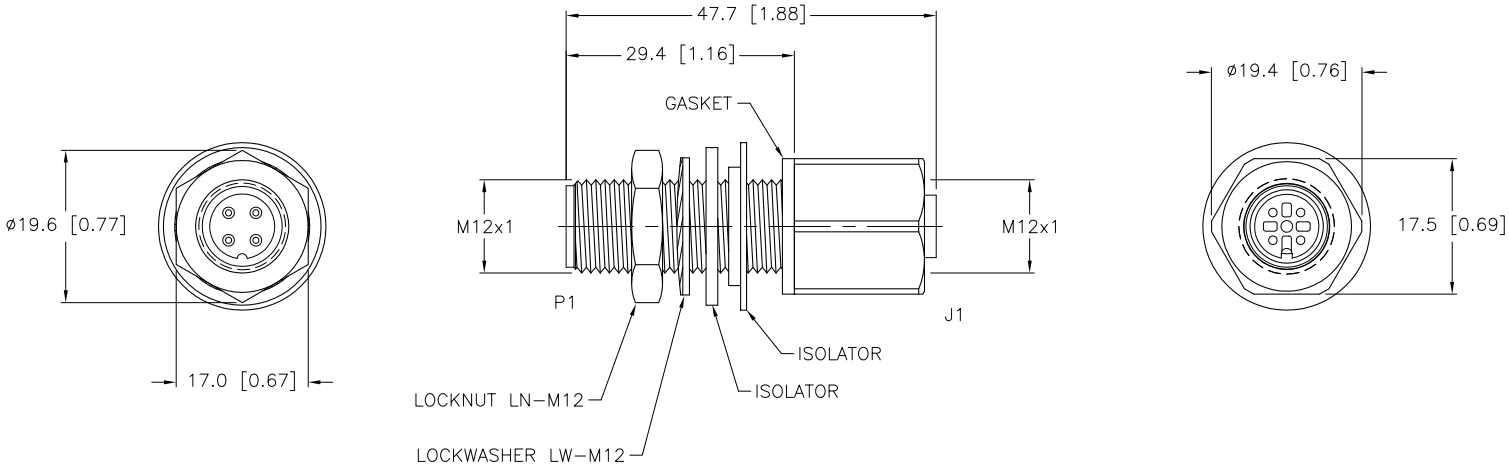

SOURCE DRAWING - FOR REFERENCE ONLY

REV	DESCRIPTION	BY	DATE	ECO NO.
D	UPDATE VOLTAGE RATING AND PROTECTION CLASS	RDS	07/28/11	35766

RELATED DOCUMENTS
1.
2.
3.
4.

3RD ANGLE PROJECTION

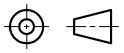

THIS DRAWING IS CONFIDENTIAL AND THE PROPERTY OF TURCK INC. USE OF THIS DOCUMENT WITHOUT WRITTEN PERMISSION IS PROHIBITED.

TURCK INC
High Technology Sensors and Automation Controls
3000 CAMPUS DRIVE
MINNEAPOLIS, MN 55441
1-800-544-7769
(763) 553-7300
(763) 553-0708 fax
turck.com

MATERIAL: SEE SPECIFICATIONS

FINISH: SEE SPECIFICATIONS

ALL DIMENSIONS DISPLAYED ON THIS DRAWING ARE FOR REFERENCE ONLY

CONTACT TURCK FOR MORE INFORMATION

DRFT: JBJ | DATE: 12/13/01

DSGN: | SCALE: 1=1.0

UNIT OF MEASUREMENT

MILLIMETER [INCH]

DO NOT SCALE THIS DRAWING

DESCRIPTION: FK FS 4.4/M12

IDENTIFICATION NO.: U1135-1 | REV: D

FILE: U1135-1 | SHEET 1 OF 1