THIS DRAWING IS UNPUBLISHED. RELEASED FOR PUBLICATION - , - .
© COPYRIGHT - By - ALL RIGHTS RESERVED.

LOC	DIST
CM	00

REVISIONS

P	LTR	DESCRIPTION	DATE	DWN	APVD
	K1	REVISED PER ECO-11-004587	11MAR11	RK	HMR

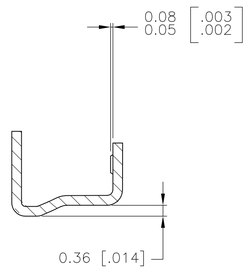

SECTION A–A

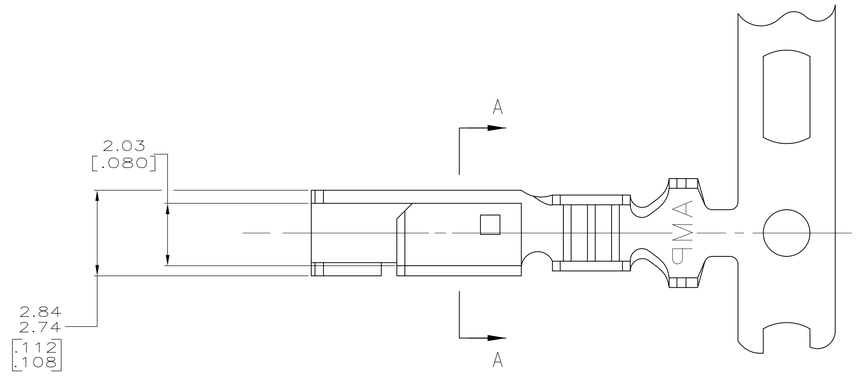

1. INSULATION RANGE: 1.09–2.79 [.043–.110]
   WIRE RANGE: 0.2–0.9 mm^2 (24–18) AWG.

2. 0.00203 [.000080] MIN BRIGHT TIN–LEAD OVER 0.00127 [.000050] MIN NICKEL.

3. 0.00076 [.000030] MIN THICK GOLD STRIPES IN LOCALIZED PLATE AREA ON BEAM AND DIMPLE OVER 0.00127 [.000050] MIN THICK NICKEL OVER ENTIRE CONTACT.

4. DIMENSIONS IN BRACKETS ARE IN INCHES.

5. 0.00203 [.000080] MIN TIN OVER 0.00127 [.000050] MIN NICKEL.

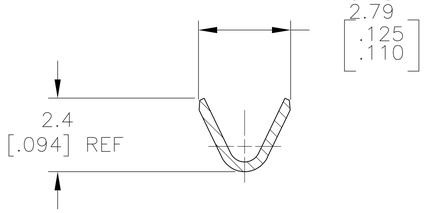

SECTION B–B

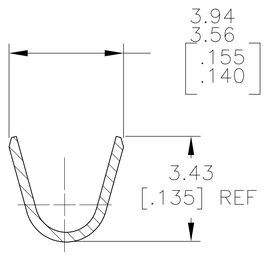

SECTION C–C

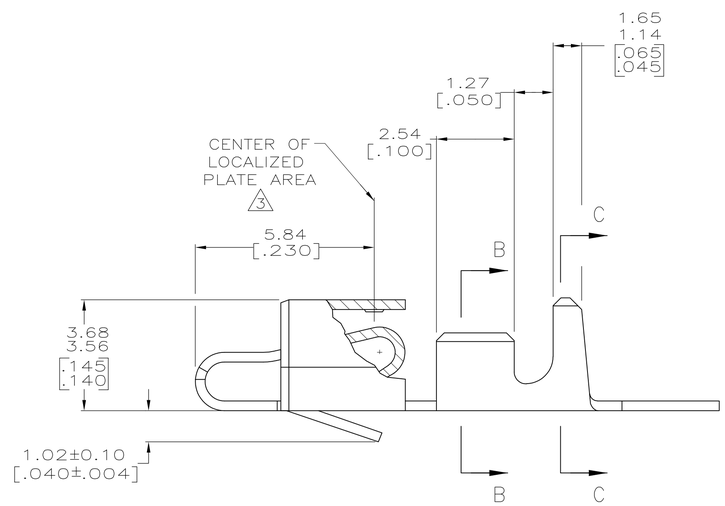

5	3–770476–1
3	770476–2
2	770476–1
FINISH	PART NO.

THIS DRAWING IS A CONTROLLED DOCUMENT.

DIMENSIONS: mm [INCHES]

TOLERANCES UNLESS OTHERWISE SPECIFIED:
0 PLC ± –
1 PLC ± –
2 PLC ± –
3 PLC ± .005
4 PLC ± –
ANGLES ± 0°30'

MATERIAL –
FINISH –

DWN K. WHITAKER 18OCT2004
CHK J. ELLIS –
APVD J. ELLIS –
PRODUCT SPEC —
APPLICATION SPEC —
WEIGHT —

TE Connectivity

NAME RECEPTACLE, SL–156

SIZE	CAGE CODE	DRAWING NO	RESTRICTED TO
A1	00779	C–770476	—

CUSTOMER DRAWING | SCALE 10:1 | SHEET 1 OF 1 | REV K1

METRIC

4805 (3/11)