THIS DRAWING IS UNPUBLISHED. RELEASED FOR PUBLICATION - ,- .
© COPYRIGHT - By - ALL RIGHTS RESERVED.

LOC	DIST
CM	00

REVISIONS

P	LTR	DESCRIPTION	DATE	DWN	APVD
	H	REVISED PER ECO-12-016927	04OCT12	KH	SM
	H1	ECR-12-016748	30AUG13	M.T	D.Z

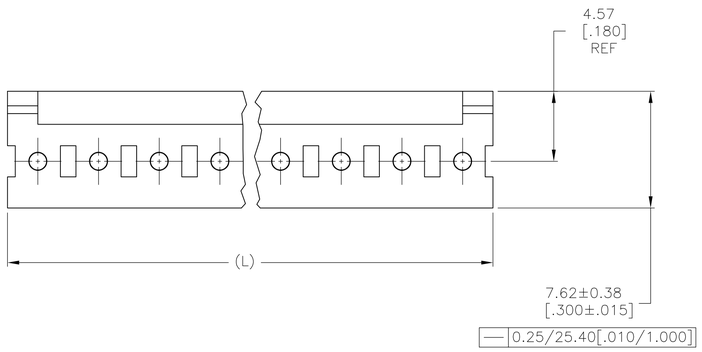

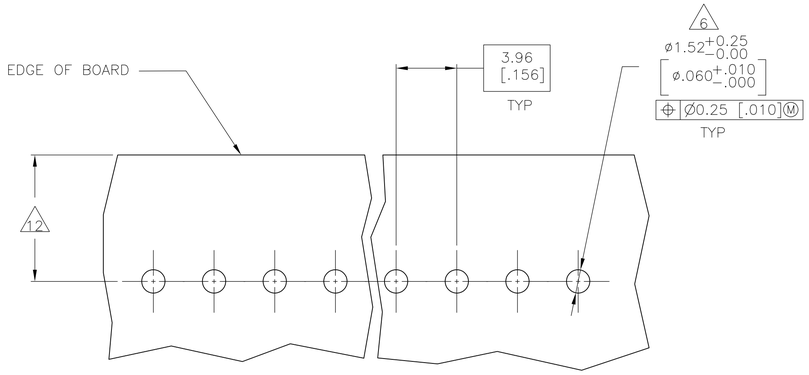

2 RECOMMENDED MOUNTING HOLE PATTERN FOR .109±0.016 THICK P.C. BOARD (H1)

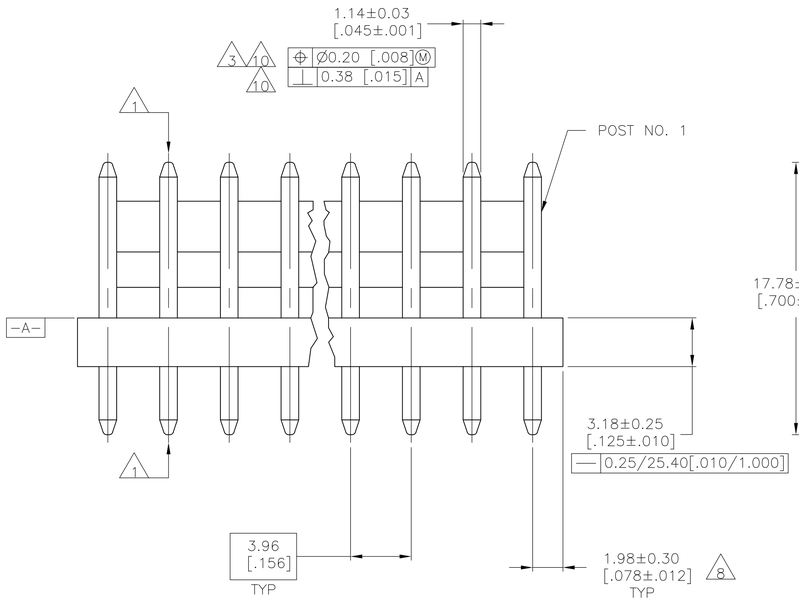

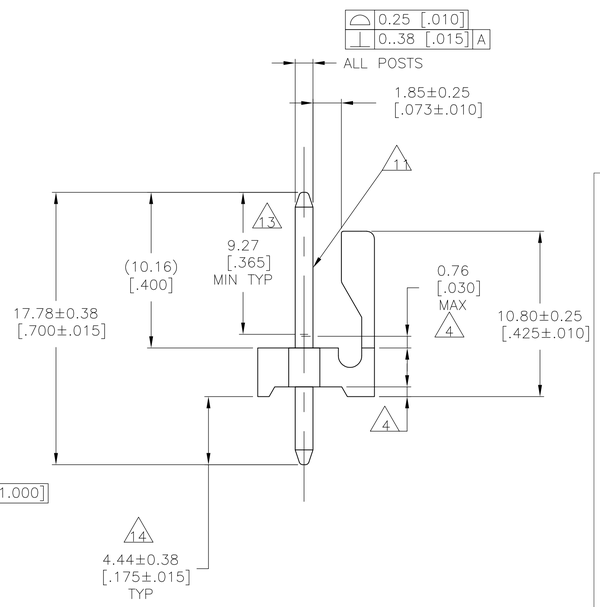

1 POST TO WITHSTAND 13 NEWTONS (3 LBS) MINIMUM AXIAL FORCE IN BOTH DIRECTIONS SHOWN WITHOUT DISLODGING.

2 TOLERANCES APPLY TO SOLDER SIDE OF BOARD.

3 MEASURED AT SURFACE −A−

4 PLASTIC FLASH PERMITTED IN THIS AREA.

5 PARTS COMPLY WITH AMP SOLDERABILITY SPEC. NO. 109-11-2.

6 ONE HOLE MAY BE UNDERSIZED 1.30/1.17 [.051/.046] DIA. FOR ASSEMBLY RETENTION DURING WAVE SOLDERING.

7 MATERIAL: HEADER-THERMOPLASTIC POLYESTER GLASS-FILLED 94V-0 (NATURAL)
POST-COPPER ALLOY (SEE NOTES 13 & 14 FOR PLATING)

8 COORDINATE DIMENSION APPLIES FROM CENTER OF ACTUAL FEATURE.

9 PLASTIC BURRS CAUSED BY CUT-OFF TOOLING ARE PERMITTED WITHIN THE MAXIMUM TOLERANCE ENVELOPE.

10 POST TO BE MEASURED WHEN STRIP IS HELD FLAT.

11 POST MUST WITHSTAND TWO 90° BENDS AGAINST EXTRUSION WITHOUT BREAKING.

12 DIMENSION SHOULD BE 4.45 [.175] MIN WHEN MATING WITH A MTA-156 CONNECTOR ASSEMBLY OR A SL-156 CONNECTOR ASSEMBLY.

13 PLATING:GOLD PLATE AREA, 0.00076 [.000030] GOLD OR 0.00008 [.000003] MIN GOLD FLASH OVER 0.00068 [.000027] PALLADIUM NICKEL,PER TE CONNECTIVITY'S DISCRETION, ALL SIDES, OVER NICKEL UNDERPLATE, 0.00127 [.000050] MIN, ALL SIDES AND ENTIRE LENGTH OF POST.

14 PLATING: BRIGHT TIN/LEAD (93/7) PLATE AREA, 0.00381-0.00889 [.000150-.000350] THICK, ALL FOUR SIDES 4.45 [.175] MINIMUM FOR -2 THRU -24. MATTE TIN PLATE AREA 0.00381-0.00889 [.000150-.000350] THICK ALL FOUR SIDES, 4.45 [.175] FOR -32 THRU -54.

15 OBSOLETE PARTS: OBSOLETE CIS STREAMLINING PER D.RENAUD/D.SINISI

16 OBSOLETE

LEAD FREE				CONTAINS LEAD			
				SUPERCEDED 15	95.10 [3.744]	24	~~2-644760-4~~
					91.14 [3.588]	23	~~2-644760-3~~
					87.17 [3.432]	22	~~2-644760-2~~
					83.21 [3.276]	21	~~2-644760-1~~
					79.25 [3.120]	20	~~2-644760-0~~
					75.29 [2.964]	19	~~1-644760-9~~
					71.32 [2.808]	18	~~1-644760-8~~
					67.36 [2.652]	17	~~1-644760-7~~
					63.40 [2.496]	16	~~1-644760-6~~
					59.44 [2.340]	15	~~1-644760-5~~
					55.47 [2.184]	14	~~1-644760-4~~
					51.51 [2.028]	13	~~1-644760-3~~
					47.55 [1.872]	12	1-644760-2
				SUPERCEDED 15 16	43.59 [1.716]	11	~~1-644760-1~~
					39.62 [1.560]	10	~~1-644760-0~~
					35.66 [1.404]	9	~~644760-9~~
					31.70 [1.248]	8	~~644760-8~~
					27.74 [1.092]	7	~~644760-7~~
					23.77 [.936]	6	~~644760-6~~
					19.81 [.780]	5	~~644760-5~~
					15.85 [.624]	4	~~644760-4~~
				SUPERCEDED 15	11.89 [.468]	3	~~644760-3~~
					7.92 [.312]	2	644760-2
	DIM (L)	NO.OF POSN	ASSEMBLY		DIM (L)	NO.OF POSN	ASSEMBLY

METRIC

THIS DRAWING IS A CONTROLLED DOCUMENT.

DIMENSIONS: mm [INCHES]

TOLERANCES UNLESS OTHERWISE SPECIFIED:
0 PLC ± -
1 PLC ± -
2 PLC ± 0.13 [.005]
3 PLC ± -
4 PLC ± -
ANGLES ± -

MATERIAL 7 FINISH 7

DWN	S. HOOVER	07NOV02
CHK	D. BOSSI	07NOV02
APVD	D. BOSSI	07NOV02
PRODUCT SPEC	—	
APPLICATION SPEC	—	
WEIGHT	—	

TE Connectivity

NAME: MTA-.156 HEADER ASSEMBLY, FRICTION LOCK, STRAIGHT, .045 ROUND POST, .000030 GOLD, SPECIAL

SIZE	CAGE CODE	DRAWING NO	RESTRICTED TO
A1	00779	C-644760	—

CUSTOMER DRAWING | SCALE 5:1 | SHEET 1 OF 1 | REV H1

4805 (3/11)