THIS DRAWING IS UNPUBLISHED. RELEASED FOR PUBLICATION -.- .
© COPYRIGHT - BY TYCO ELECTRONICS CORPORATION. ALL RIGHTS RESERVED.

LOC	DIST
AD	00

REVISIONS

P	LTR	DESCRIPTION	DATE	DWN	APVD
	L	ECO-07-012860	24JUL2007	RB	MM
	L1	REV PER ECO-09-021510	11AUG09	KK	AEG

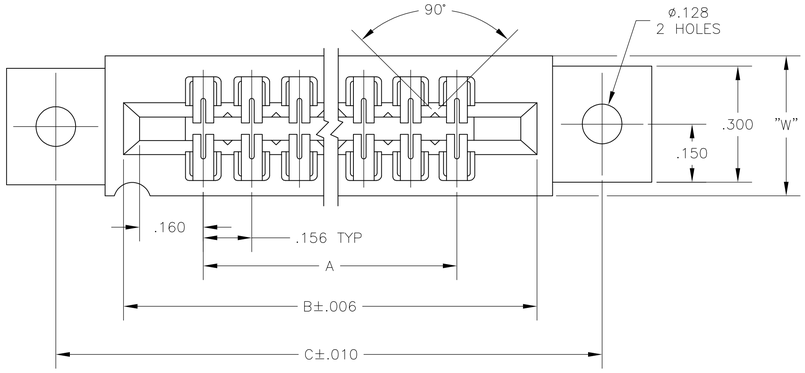

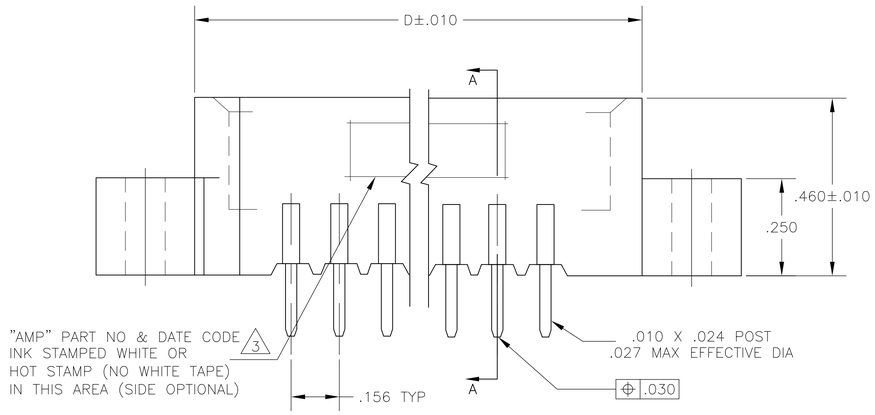

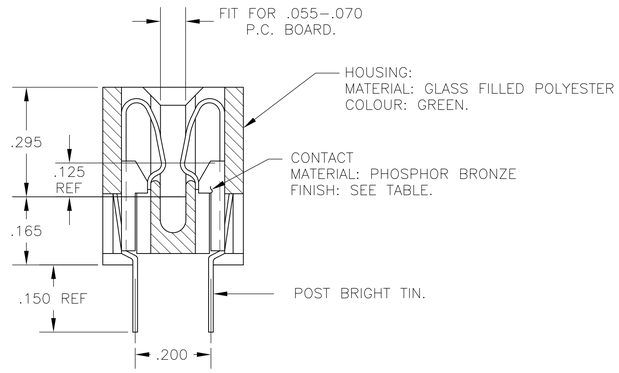

SECTION A-A

1. .000015 MIN GOLD OVER .000050 MIN. NICKEL IN CONTACT AREA.
2. .000030 MIN GOLD OVER .000050 MIN. NICKEL IN CONTACT AREA.
3. ALL PARTS ASSEMBLED IN MEXICO MUST BE STAMPED " ASSY IN MEXICO " THE WORD " MEXICO " CAN BE SUBSTITUTED ONLY WHERE PART SIZE PROHIBITS STAMPING " ASSY IN MEXICO ", INK STAMP COLOR WHITE OR HOT STAMP (NO WHITE TAPE) 115-9009,APPROX WHERE SHOWN SIDE OPTIONAL.
4. MATTE TIN PLATED CONTACT TAILS.
5. OBSOLETE PARTS: OBSOLETE CIS STREAMLINING PER D.RENAUD/D.SINISI

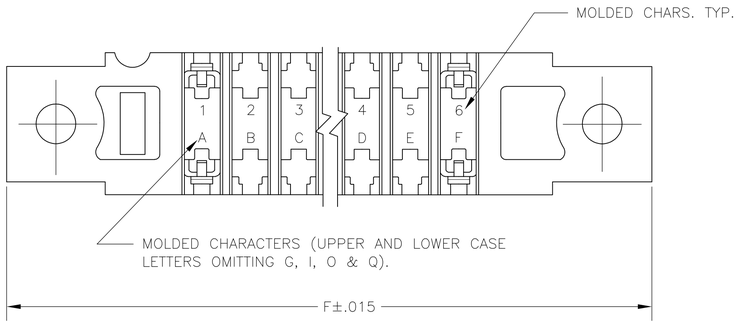

	W	2 PART NO	NO.OF. POSITION	A	B	C	D	E	1 PART NO
	4 .437	5 8-530689-0	36	5.460	5.780	6.215	5.920	6.465	–
	4 .437	5 7-530689-9	30	4.524	4.844	5.279	4.984	5.529	–
	4 .370	7-530689-6	22	3.276	3.596	4.031	3.736	4.281	–
	4 .370	5 7-530689-4	15	2.184	2.504	2.939	2.644	3.189	–
	4 .370	5 7-530689-1	6	.780	1.100	1.535	1.240	1.785	–
OBSOLETE	~~.437~~	~~3-530689-3~~	~~43~~	~~6.552~~	~~6.872~~	~~7.307~~	~~7.012~~	~~7.557~~	~~1-530689-3~~
	~~.370~~	~~3-530689-2~~	~~28~~	~~4.212~~	~~4.532~~	~~4.967~~	~~4.672~~	~~5.217~~	~~1-530689-2~~
	~~.437~~	~~3-530689-1~~	~~44~~	~~6.708~~	~~7.028~~	~~7.463~~	~~7.168~~	~~7.713~~	~~1-530689-1~~
	~~.437~~	~~3-530689-0~~	~~36~~	~~5.460~~	~~5.780~~	~~6.215~~	~~5.920~~	~~6.465~~	~~1-530689-0~~
	~~.437~~	~~5 2-530689-9~~	~~30~~	~~4.524~~	~~4.844~~	~~5.279~~	~~4.984~~	~~5.529~~	~~530689-9~~
	~~.370~~	~~2-530689-8~~	~~25~~	~~3.744~~	~~4.064~~	~~4.499~~	~~4.204~~	~~4.749~~	~~530689-8~~
	~~.370~~	~~2-530689-7~~	~~24~~	~~3.588~~	~~3.908~~	~~4.343~~	~~4.048~~	~~4.593~~	~~530689-7~~
	.370	2-530689-6	22	3.276	3.596	4.031	3.736	4.281	~~530689-6~~
	~~.370~~	~~2-530689-5~~	~~18~~	~~2.652~~	~~2.972~~	~~3.407~~	~~3.112~~	~~3.657~~	~~530689-5~~
	~~.370~~	~~5 2-530689-4~~	~~15~~	~~2.184~~	~~2.504~~	~~2.939~~	~~2.644~~	~~3.189~~	~~530689-4~~
	~~.370~~	~~2-530689-3~~	~~12~~	~~1.716~~	~~2.036~~	~~2.471~~	~~2.176~~	~~2.721~~	~~530689-3~~
	~~.370~~	~~2-530689-2~~	~~10~~	~~1.404~~	~~1.724~~	~~2.159~~	~~1.864~~	~~2.409~~	~~530689-2~~
	.370	2-530689-1	6	.780	1.100	1.535	1.240	1.785	530689-1

THIS DRAWING IS A CONTROLLED DOCUMENT.

DIMENSIONS: INCHES

TOLERANCES UNLESS OTHERWISE SPECIFIED:
0 PLC ± –
1 PLC ± –
2 PLC ± –
3 PLC ± .005
4 PLC ± –
ANGLES ± –

MATERIAL: SEE CALL-OUT
FINISH: SEE CALL-OUT

DWN – 15SEP75
CHK – 15SEP75
APVD – 16SEP75
PRODUCT SPEC –
APPLICATION SPEC –
WEIGHT –

Tyco Electronics
Tyco Electronics Corporation
Harrisburg, Pa 17105-3608

NAME: HOUSING ASSY, LOW PROFILE, EDGE CONNECTOR, FLOW SOLDER, FOR .040 DIA. HOLE, .200 ROW, 156 CENTERS.

SIZE	CAGE CODE	DRAWING NO	RESTRICTED TO
A1	00779	C-530689	–

CUSTOMER DRAWING | SCALE 4:1 | SHEET 1 OF 1 | REV L1