FIBOX FC PC 17/16

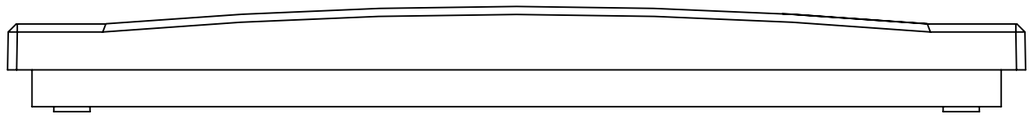

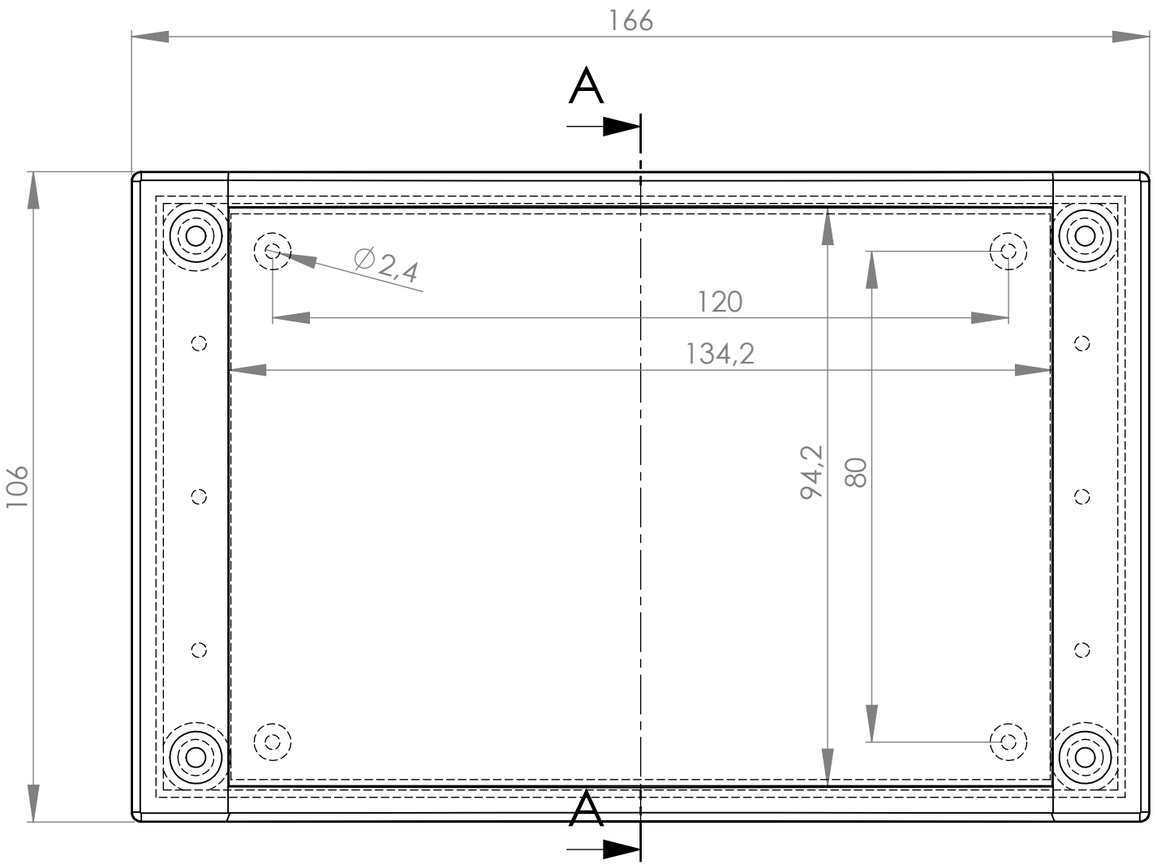

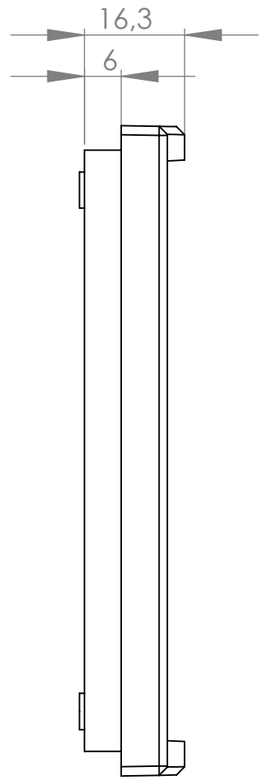

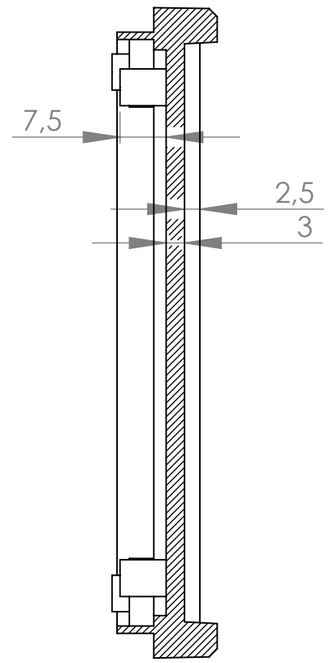

SECTION A-A