THIS DRAWING IS UNPUBLISHED. RELEASED FOR PUBLICATION -,- .
© COPYRIGHT - By - ALL RIGHTS RESERVED.

LOC	DIST
AF	50

REVISIONS

P	LTR	DESCRIPTION	DATE	DWN	APVD
	F	REVISED PER ECR-12-013459	27NOV2012	KH	PD

1 CONTINUOUS STRIP ON REELS.

2 MATING TAB THK IS 0.81±0.025[.032±.001].

3 WIRE SIZE IS [#20-#16] AWG.

4 INSULATION RANGE IS 2.29-3.30[.090-.130] DIA.

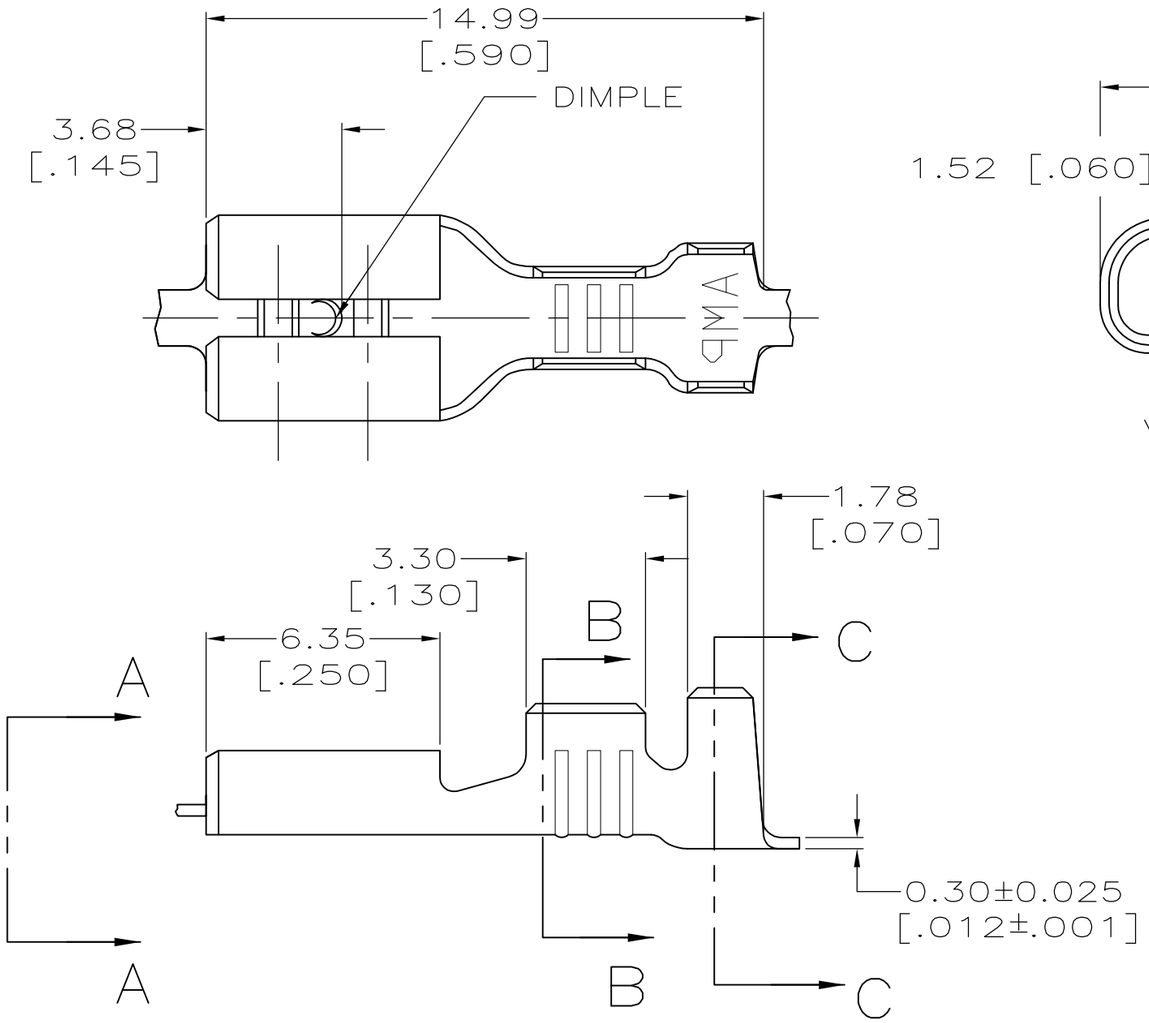

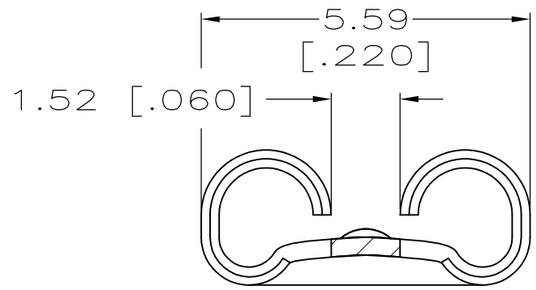

VIEW A-A
SCALE 10:1

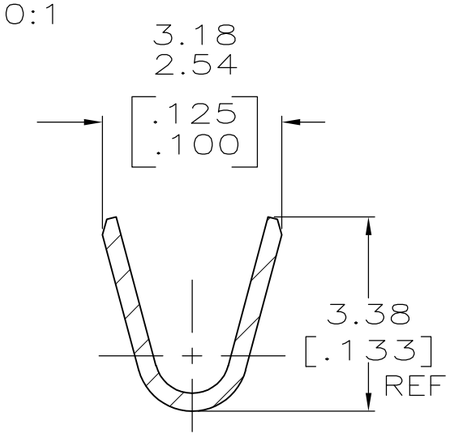

SECTION B-B
SCALE 10:1

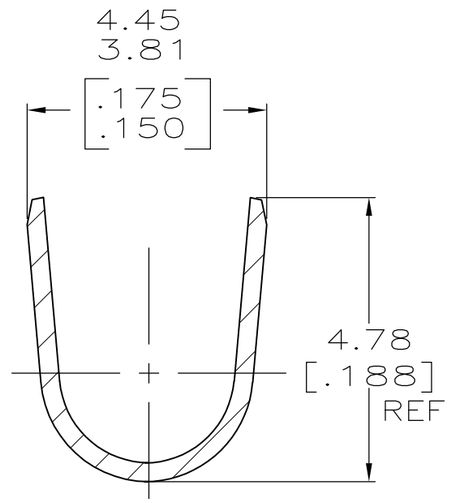

SECTION C-C
SCALE 10:1

62865-1
PART NO

THIS DRAWING IS A CONTROLLED DOCUMENT.

DIMENSIONS: mm [INCHES]

TOLERANCES UNLESS OTHERWISE SPECIFIED:

0 PLC	± -
1 PLC	± -
2 PLC	± -
3 PLC	± 0.38 [.015]
4 PLC	± -
ANGLES	± -

MATERIAL: BRASS

FINISH: TIN

DWN	JR RUTH	1/29/98
CHK	MS FEHER	1/29/98
APVD	J GILLESPIE	1/29/98
PRODUCT SPEC	—	
APPLICATION SPEC	—	
WEIGHT	—	

CUSTOMER DRAWING

TE Connectivity

NAME: RECEPTACLE, FASTON, 4.75 [.187] SERIES

SIZE	CAGE CODE	DRAWING NO	RESTRICTED TO
A3	00779	C-62865	—

SCALE	SHEET	REV
6:1	1 OF 1	F

1470-19 (3/11)