MATERIAL NUMBER	ENGINEERING NUMBER	CARRIER	LOGO ORIENTATION	DIMENSION "A"	DIMENSION "B"	MIN. PARTS PER REEL
197054003	19705-4003	STRIP	IN	.560/14.22	.250/6.35	5,000
197054103	19705-4103	STRIP	IN	.560/14.22	.187/4.75	
197054105	19705-4105	STRIP	OUT	.560/14.22		
197054203	19705-4203	STRIP	IN	.405/10.29	.250/6.35	10,000
197054204	19705-4204	STRIP	OUT	.405/10.29		
197054001	19705-4001	LOOSE	-	.560/14.22	.250/6.35	-
197054101	19705-4101	LOOSE	-	.560/14.22	.187/4.75	-
197054201	19705-4201	LOOSE	-	.405/10.29	.250/6.35	-

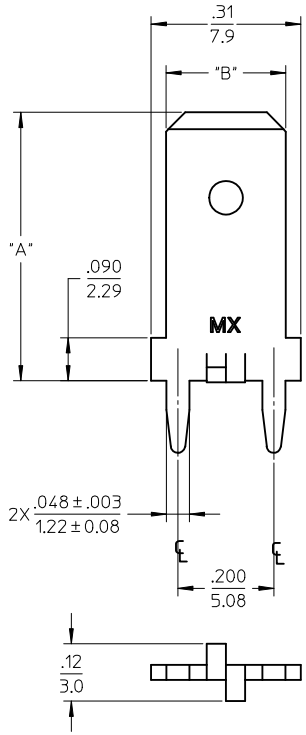

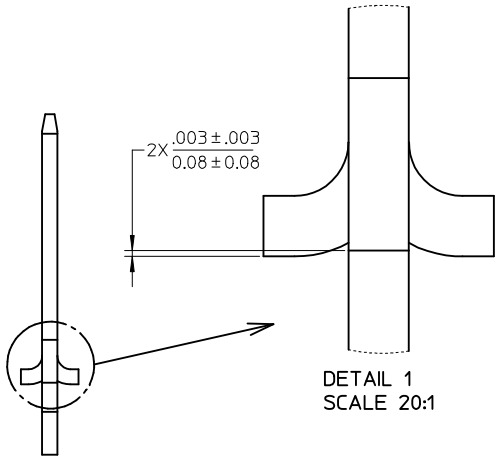

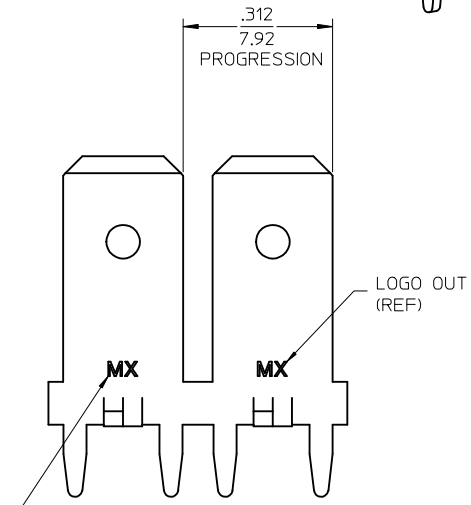

LOGO OPTIONS: MX, ETC, MX-ETC, OR MXN MAY ALSO BE UPSIDE-DOWN FOR DIE IDENTIFACTION PURPOSES (L1)

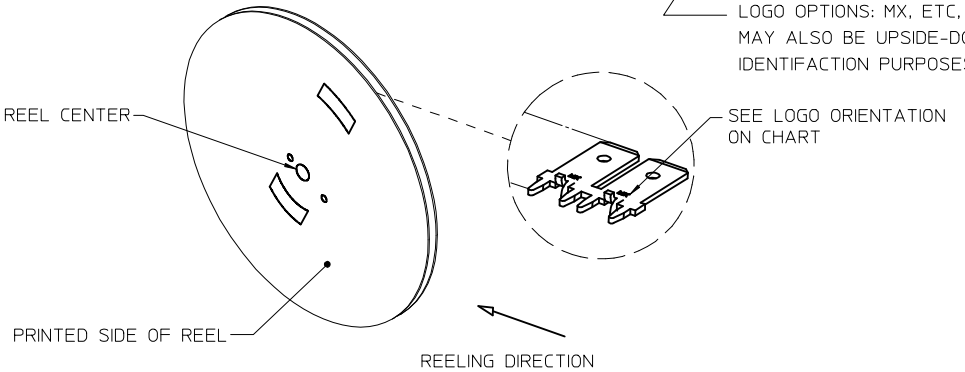

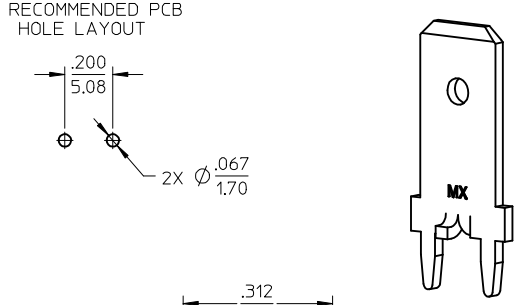

NOTES:

1. BARE EDGES PERMISSIBLE AT CARRIER CUT OFF.
2. MATERIAL: BRASS C26000 (.032/0.81) THICK.
3. TAB CONFORMS TO NEMA SPECIFICATIONS.
4. ALL DIMENSIONS AND NOTES REFERENCE UNLESS OTHERWISE NOTED.
5. PLATING: MATTE TIN OVER NICKEL 150μ IN/3.81 μ mm MINIMUM THICKNESS OVER NICKEL 50μ IN/1.25μ mm MINIMUM THICKNESS.
6. 24" DIAMETER REEL WITH A 1.25" DIAMETER CENTER HOLE.
7. PART IS RoHS COMPLIANT

LOGO CLARIFIED
EC NO: WNA2009-0488
DRWN:ETHRODAHL 2009/02/10
CH'KD:JMACNEIL 2009/02/12
APPR: JMACNEIL 2009/02/12
DESCRIPTION
REV L1

QUALITY SYMBOLS
▼=0
▽=0

GENERAL TOLERANCES (UNLESS SPECIFIED)

	mm	INCH
4 PLACES	± ---	± ---
3 PLACES	± ---	± .005
2 PLACES	± 0.13	± .01
1 PLACE	± 0.25	± ---
ANGULAR ±1/2°		

DRAFT WHERE APPLICABLE MUST REMAIN WITHIN DIMENSIONS

DIMENSION STYLE: IN/MM
SCALE: 5:1
DESIGN UNITS: INCH
THIRD ANGLE PROJECTION

		DATE
DRAWN BY	EDB	11/08/96
CHECKED BY	JH	11/08/96
APPROVED BY	RWD	11/08/96

TITLE: QUICK DISCONNECT PCB MOUNTABLE .250 & .187 X .032 TAB

molex MOLEX INCORPORATED

MATERIAL NO.: SEE CHART
DOCUMENT NO.: SD-19705-400
SHEET NO.: 1 OF 1
SIZE: C

THIS DRAWING CONTAINS INFORMATION THAT IS PROPRIETARY TO MOLEX INCORPORATED AND SHOULD NOT BE USED WITHOUT WRITTEN PERMISSION