FO-55113-B

REV	DOCUMENT	CHANGED BY	CHECK
8	0012394	SPK 11APR05	AK

HONEYWELL PART NUMBER
31HE101-6

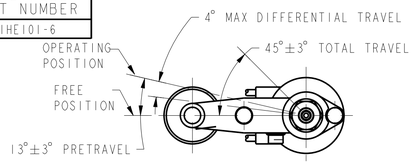

CHARACTERISTICS
SCALE: FULL

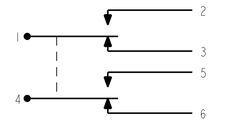

CIRCUIT DIAGRAM

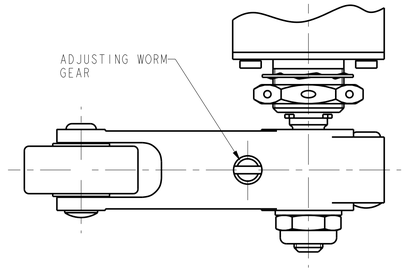

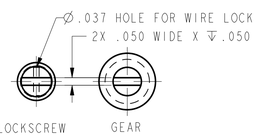

ROLLER LEVER MAY BE ADJUSTED FOR AN INFINITE NUMBER OF POSITIONS THRU 360°. ADJUSTMENT IS MADE BY LOOSENING THE LOCK NUT AND THEN THE SCREW AND TURNING GEAR UNTIL LEVER IS IN DESIRED POSITION. SCREW AND LOCK NUT ON SHAFT IS THEN TIGHTENED TO POSITIVELY LOCK LEVER IN POSITION.

LEVER ADJUSTMENT DETAIL

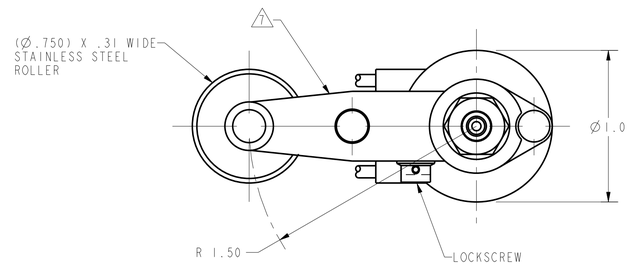

SPECIFICATION DETAILS:	
STANDARD:	CONFORMS TO MS21320-1 (MIL-S-8805/48), EXCEPT AS NOTED
CONSTRUCTION:	
ENCLOSURE DESIGN	RESILIENT SEAL PER MIL-S-8805, SYMBOL 4 (1)
CONTACT MATERIAL & CONFIGURATION	GOLD BIFURCATED
CIRCUIT CONFIGURATION	2 SPDT
TERMINATION	LEADWIRES PER MIL-W-22759/7
WEIGHT	10 OZ MAX
EXPOSED METALS	CORROSION RESISTANT
ELECTRICAL CHARACTERISTICS:	
ELECTRICAL RATINGS	VOLTAGE / RESISTIVE / LOAD INDUCTIVE
-SEA LEVEL	28 VDC / .5A / .25A
-50,000 FEET	28 VDC / .5A / .25A
DIELECTRIC STRENGTH & INSULATION RESISTANCE	DIELECTRIC STRENGTH (≈60 Hz. FOR 5 SECONDS) / INSULATION RESISTANCE (500 VDC ± 10%)
-BETWEEN TERMINALS AND EXPOSED NON-CURRENT CARRYING METAL	1000 V Rms, 500µ A (MAX. LEAKAGE) / 1000 Meghoms MIN
-BETWEEN TEMRINALS OF MUTUALLY INSULATED CIRCUITS	" / "
-BETWEEN ALL UNCONNECTED TERMINALS OF THE SAME POLE	" / "
SWITCH RESISTANCE	N/A
RECOMMENDATION FOR USE IN APPLICATIONS LESS THAN .5 amps AND/OR 12 volts	YES (10)
MECHANICAL CHARACTERISTICS:	
CHARACTERISTICS:	
OPERATING TORQUE	12-25 IN-LBS
RELEASE TORQUE	9 IN-LBS MIN
FULL OVERTRAVEL TORQUE	40 IN-LBS MAX
PRETRAVEL	SEE DETAIL
FREE POSITION	SEE DETAIL
OVERTRAVEL	SEE DETAIL
MOUNTING STRENGTH	15 IN-LBS
ACTUATOR STRENGTH	10 LBS APPLIES IN A DIRECTION TO CAUSE SWITCH ACTUATION
LIFE:	
MECHANICAL LIFE	25,000 MIN. PER MIL-S-8805/48 (11)
ELECTRICAL LIFE AT FULL RATED LOAD	25,000 MIN. PER MIL-S-8805/48 (11)
ENVIRONMENTAL:	
TEMPERATURE RANGE	-55°C TO +85°C
ALTITUDE RANGE	SEA LEVEL TO 50,000 FEET
SHOCK	PER MIL-S-8805 SYMBOL M - 100 g
VIBRATION	PER MIL-S-8805 SYMBOL I - 10-500 Hz. & 10 g peak
MOISTURE RESISTANCE	PER MIL-S-8805 PARA 3.20
THERMAL SHOCK	PER MIL-S-8805 PARA 3.16
SALT SPRAY	PER MIL-S-8805 PARA 3.22

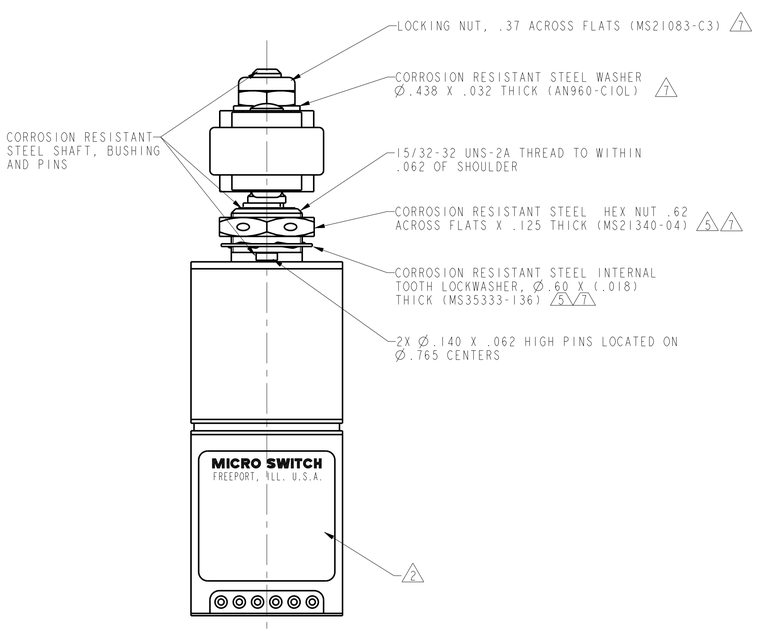

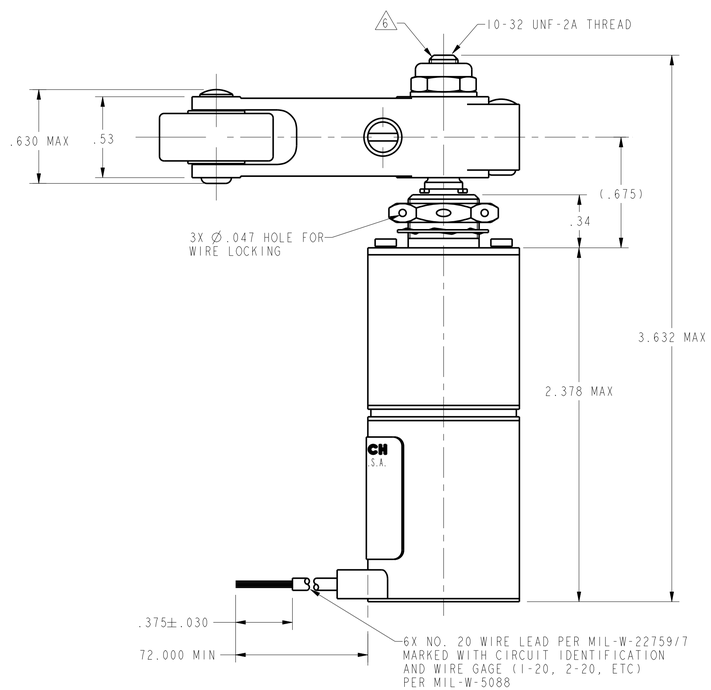

NOTES
1. INTERNAL SWITCHES SEALED PER MIL-S-8805 SYMBOL 5
2. CIRCUIT DIAGRAM, CATALOG LISTING, FSCM CODE, MICRO SWITCH, FAA-PMA AND DATE CODE IS SHOWN ON SWITCH
3 - CORROSION RESISTANT STEEL ENCLOSURE
4 - TOTAL TRAVEL OF ROLLER LEVER IS 45°±3° IN CLOCKWISE DIRECTION ONLY WITH SPRING RETURN TO NEUTRAL
5. REPLACEMENT MOUNTING HARDWARE - PACKET 19PA10
6. DO NOT APPLY MORE THAN 20-25 INCH POUNDS OF TORQUE WHEN TIGHTENING LOCKING NUT
7. HARDWARE MAY BE PACKAGED UNASSEMBLED PER MIL-S-8805
8 - BASIC SWITCHES HAVE GOLD BIFURCATED CONTACTS
9 - RETURN TORSION SPRING MATERIAL 17-7 PH SST
10. CONTACT HONEYWELL-MICRO SWITCH IF ADDITIONAL INFORMATION ON LOW ENERGY LOADS IS REQUIRED OR FOR HELP WITH SPECIFIC APPLICATIONS
11. LIFE RATINGS ARE PER MIL-S-8805 REQUIREMENTS. ACTUAL LIFE EXCEEDS RATED LIFE. CONTACT HONEYWELL-MICRO SWITCH FOR ADDITIONAL DATA
12. FOR MANUFACTURING DETAILS SEE ASSEMBLY DRAWING 31HE101-6 FOR FAA-PMA

CATALOG LISTING 31HE101-6
FAA-PMA (12)

WEIGHT: 10 OZ MAX

DESIGN UNITS: INCH
TOLERANCES UNLESS NOTED:

NO PLACE	X	±	
ONE PLACE	.X	±	0.030
TWO PLACE	.XX	±	0.015
THREE PLACE	.XXX	±	0.005
FOUR PLACE	.XXXX	±	
ANGLES	X	±	

THIRD ANGLE PROJECTION

DRAWN	DLT	14AUG02
CHECK	S A V	14AUG02

THIS DRAWING COVERS A PROPRIETARY ITEM AND IS THE PROPERTY OF HONEYWELL. THIS DRAWING IS NOT TO BE COPIED OR USED WITHOUT THE PERMISSION OF HONEYWELL.

INTERPRET PER ANSI Y14.5M-1982 OTHER HONEYWELL ENGINEERING STANDARDS MAY APPLY

Pro/ENGINEER 2D

Honeywell

TITLE SWITCH, ENCLOSED

SIZE D | TYPE 1 | DRAWING NAME 31HE101-6 | REV 8

SCALE 2:1 | SHEET 1 OF 1