Honeywell

LIMIT SWITCH

CATALOGUE LISTING
GLS

CHART NO.
MTG-GL-177

FIG. 1

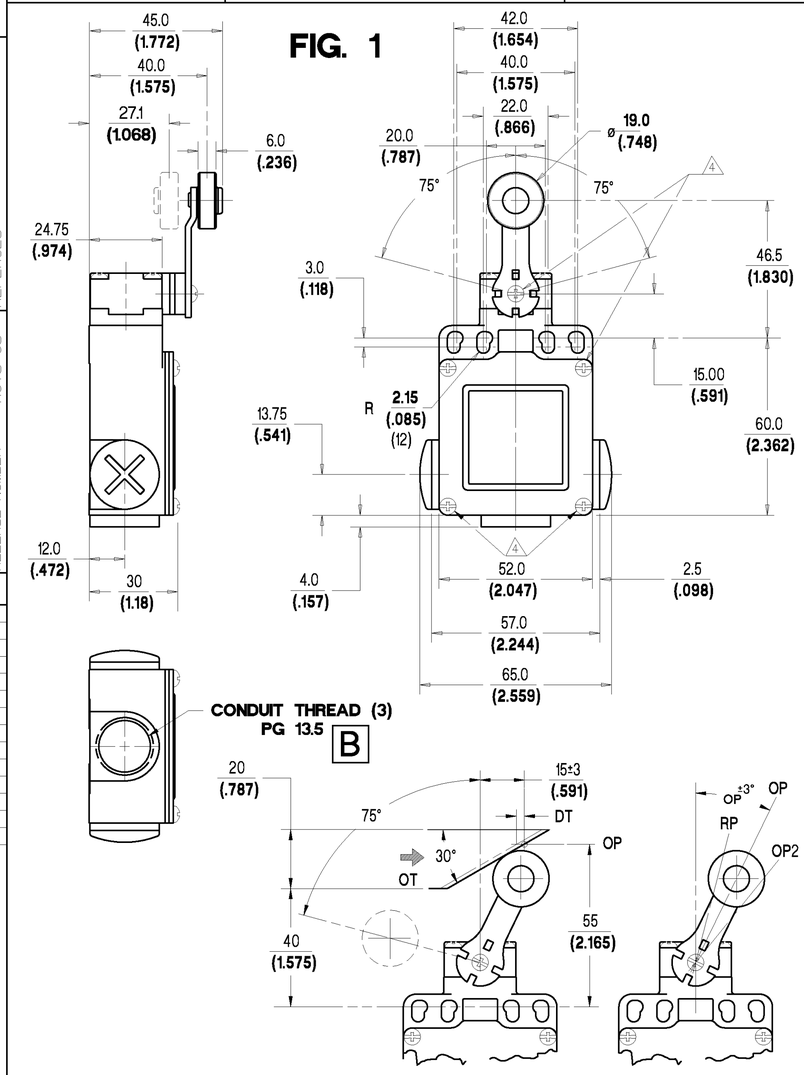

	SNAP-ACTION CONTACTS	SLOW-ACTION CONTACTS (BREAK BEFORE MAKE)	SLOW-ACTION CONTACTS (MAKE BEFORE BREAK)	SLOW-ACTION CONTACTS (2 NORMALLY CLOSED)	SNAP-ACTION CONTACTS (DOUBLE POLE)	CONTACT BLOCK DIAGRAM TERMINAL DESIGNATION TO EN 50013
	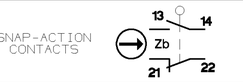					NOMINAL TRAVELS AND RELATED TERMINALS CONTACT CLOSED CONTACT OPEN * POSITIVE OPENING TO IEC 947-5-1
	FP = 0° OP = 26° DT = 11.5° * = 54° RP = 14.5° OT = 61° to 75°	FP = 0° OP = 23° * = 34° OP2 = 36° OT = 61° to 75°	FP = 0° OP = 26° * = 50.5° OP2 = 39° OT = 61° to 75°	FP = 0° OP = 26° * = 46.5° OT = 61° to 75°	FP = 0° OP = 26° RP = 18° DT = 8° * = 54° OT = 61° to 75°	
	120 (1.1)	110 (1.0)	110 (1.0)	110 (1.0)	165 (1.5)	NORMAL OPERATING TORQUE MAX Nmm (in.lbs)
	140 (1.3)	160 (1.5)	170 (1.6)	150 (1.4)	165 (1.5)	MAXIMUM DISCONNECT TORQUE Nmm (in.lbs)

01 OR 07 — 03 OR 33 — 04 OR 34 — 06 OR 36 — 24 OR 32

24: BASIC SWITCH WITH SILVER CONTACTS
32: BASIC SWITCH WITH GOLD PLATED CONTACTS.

BASIC SWITCH
CONDUIT THREAD (SEE FIGS. 1 & 2)
SIDE ROTARY ACTUATOR (SEE FIG. 1) A1A = PLASTIC ROLLER A1B = METAL ROLLER)
HEAD ORIENTATION AND LEVER DIRECTION OF OPERATION (SEE FIG. 3)
EN50047 BODY TYPE (SEE FIG. 1)
MODIFICATION CODE

GLE X XX XXX - X XXXX

1/2" NPT X 14 CONDUIT THREAD ADAPTER	A	01	A1A	1	C021
PG 13.5 CONDUIT THREAD	B	03	A1B	2	Q01
M20 X 1.5 CONDUIT THREAD	C	04		3	Q02
PF 1/2 CONDUIT THREAD	D	06		4	Q03
		07		5	Q04
		24			Q07
		32			
		33			
		34			
		36			

C021: CABLE 5 WIRE, WITH GROUND. LAST CHARACTER IS CABLE LENGTH 1 = 1MTR. CABLE LENGTHS ARE FROM 1 TO 9 METRES. ONLY AVAILABLE WITH CONDUIT THREAD TYPE 'B'.

Q01: CONNECTOR, 4 PIN MICRO. ONLY AVAILABLE WITH CONDUIT THREAD TYPE 'B'.

Q02: CONNECTOR, 5 PIN MICRO TWIN KEYWAY. ONLY AVAILABLE WITH CONDUIT THREAD TYPE 'B'.

Q03: CONNECTOR, 4 PIN MINI. ONLY AVAILABLE WITH CONDUIT THREAD TYPE 'B'.

Q04: CONNECTOR, 5 PIN MINI. ONLY AVAILABLE WITH CONDUIT THREAD TYPE 'B'.

Q07: CONNECTOR, 5 PIN MICRO. ONLY AVAILABLE WITH CONDUIT THREAD TYPE 'B'.

NOTE:-
ANY STANDARD LISTING WITH SUFFIX 'RS' OR 'FE' IS PERMITTED.

BLANK = LEVER TO FRONT, SWITCHING IN BOTH DIRECTIONS.

NOTES:-

1. ZINC DIECAST BODY AND HEAD WITH STEEL COVER. BODY AND COVER FINISHED IN MICRO SWITCH BLUE EPOXY PAINT. HEAD FINISHED IN BLACK EPOXY PAINT.
2. MINIMUM OPERATING VELOCITY (Vmin) : 2.0 MM/S
   MAXIMUM OPERATING VELOCITY (Vmax) : 200 MM/S
   MAXIMUM OPERATING FREQUENCY (Fmax): 250 OPS/MIN
   (THESE LIMITS APPLY TO CAM OPERATION AS SHOWN IN THE ABOVE DIAGRAMS ONLY)
3. FREE POSITION (FP), OPERATING POINT (OP), OVERTRAVEL (OT) AND PRETRAVEL (PT) ALL TO EN50047.

4 MAXIMUM TIGHTENING TORQUE FOR FIXING SCREW = 0.5Nm (4.4in.LB)

NO CHANGES CAN BE MADE TO THIS DRAWING WITHOUT JOINT NEWHOUSE/FREEPORT APPROVAL

FIG 2

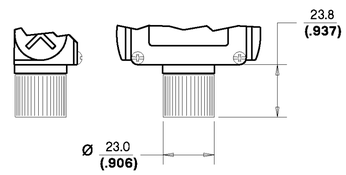

1/2" NPT X 14 CONDUIT THREAD ADAPTER **A**

FIG 3

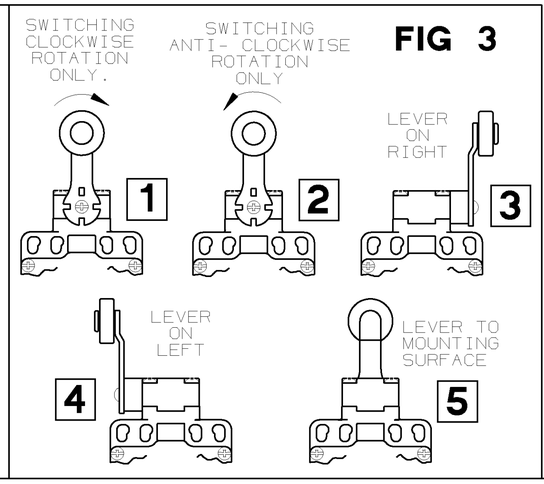

NOTE:
FOR CONNECTION DIAGRAMS AND ADDITIONAL ELECTRICAL, ENVIRONMENTAL & DIMENSIONAL INFORMATION SEE DRAWING GL-49212.

NOTE:- CABLE AND CONNECTOR WILL BE FITTED TO BOTTOM EXIT CONDUIT ONLY. OTHER OPTIONS CUSTOMER SPECIAL'N' LISTING.

STANDARD SILVER CONTACTS		GOLD PLATED CONTACTS		
ELECTRICAL RATING		ELECTRICAL RATING	ENVIRONMENTAL	APPROVALS
AC A300 AC15 Ue Ie VOLTS AMPS 120 6 240 3	DC Q300 DC13 Ue Ie VOLTS AMPS 125 0.55 250 0.27	I_{th} = 10A 1V 10µA MIN. 50V 100mA MAX.	IP66 NEMA 1,4,12,13 TEMP RANGE : -25°C TO 85°C -13°F TO 185°F STORAGE : -40°C TO 85°C -40°F TO 185°F SHOCK : 50G PER IEC 68-2-27 VIBRATION : 10G PER IEC 68-2-6	UL CSA IEC 947-5-1 EN50047

THE COPYRIGHT OF THIS DRAWING IS THE PROPERTY OF HONEYWELL LTD. THE DRAWING IS SUPPLIED IN CONFIDENCE AND MUST NOT BE USED FOR ANY PURPOSE OTHER THAN THAT FOR WHICH IT IS SUPPLIED.

THIRD ANGLE PROJECTION | SCALE 1:1 | DIMENSIONS ARE IN MM/INCHES. | MODIFY ON CAD3D SYSTEM ONLY

DRAWN	M. LOCH	3/93
CHECK	I. WEIR	3/93
DESIGN	J. BOYD	3/93
AUTHOR'N	P. TRICKETT	3/93

MTG-GL-177

REPLACES

DRAWING NUMBER A018-38

ISSUE 11

RELEASE NUMBER

REVISIONS

6	9/96
A018-276	
7	12/96
A018-293	
8	7/97
CO-000083	
9	8/97
CO-000106	
10	2/98
CO-000288	
11	CO/395
IW	6/98