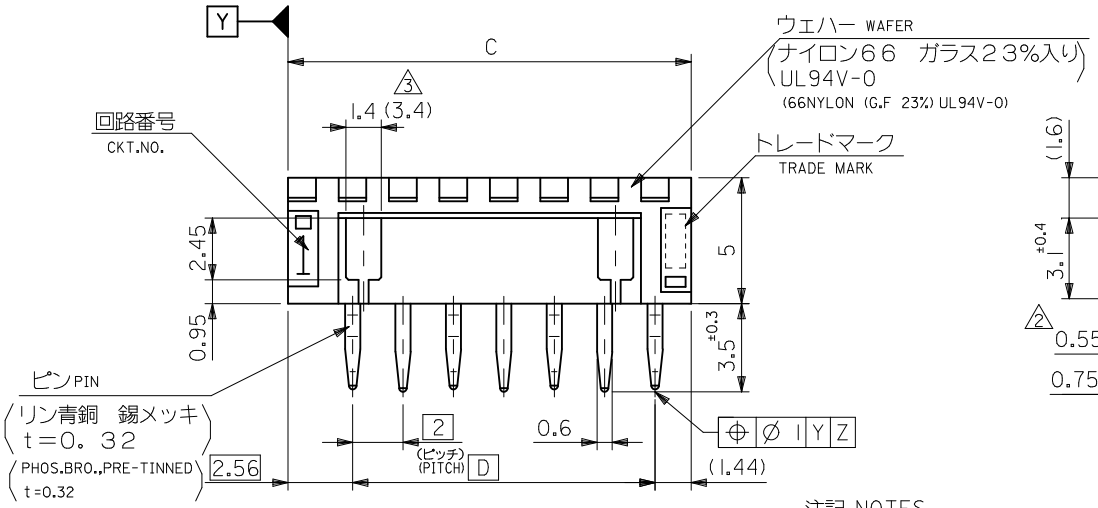

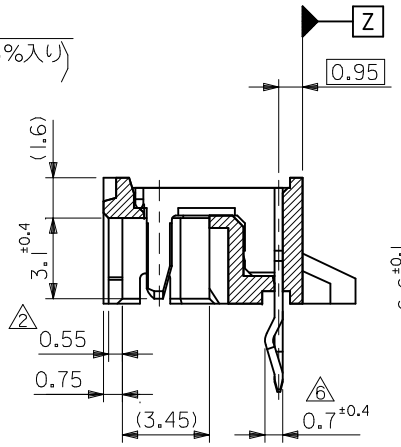

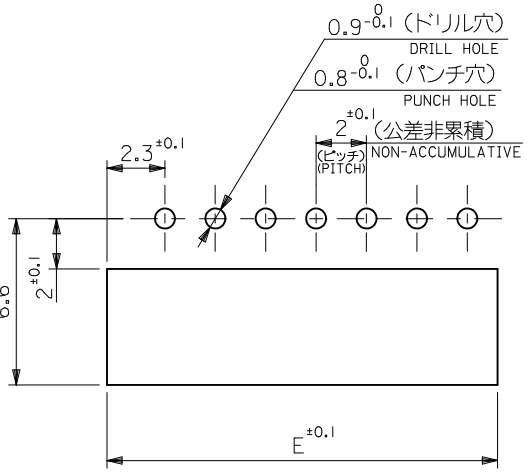

基板取付穴推奨寸法（マウント面）
RECOMMENDED P.C.BOARD HOLE DIMENSION (MOUNTING SIDE)

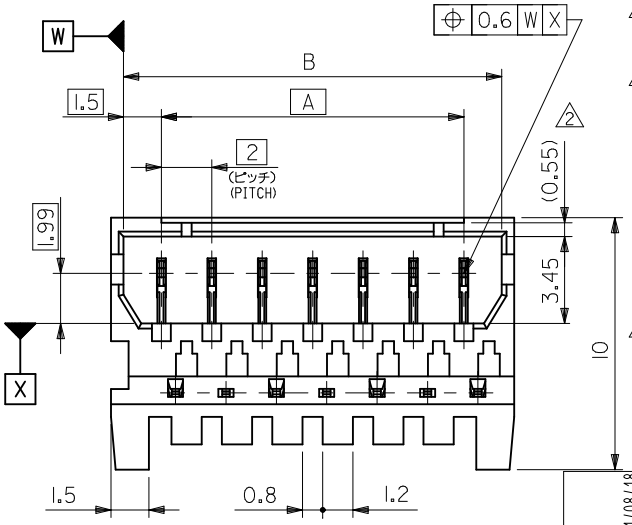

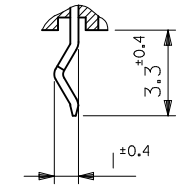

2極の場合
IN CASE OF 2 CIRCUIT

注記 NOTES

1 嵌合相手：51004-**00
MATES WITH : 51004-**00

2 6極以上にのみ適用する。
DOTTED LINE TYPICAL 6 THRU 12 CIRCUIT WAFER ONLY.

3 3極にのみ適用する。
3 CIRCUIT WAFER ONLY.

4 ロック窓は、2及び3極に1個
4極以上は、2個とする。
ONE LOOKING WINDOW, FOR 2&3CKT.
TWO LOOKING WINDOW, FOR 4CKT. & MORE THAN 4CKT.

5 成形材料 RESIN MATERIAL
ASAHI CHEMICAL INDUSTRY CO.,LTD
66NYLON FG101 UL94V-0
UL FILE NO.E48285

6 キンクはトレードマーク側から見て奇数極につける事
KINK TO BE ADDED ON THE ODD NUMBER SOLDER TAILS. (FROM THE TRADE MARK SIDE)

E	D	C	B	A	ENG. NO.	CKT.
25.5	22	26	25	22	53025-1210	12
23.5	20	24	23	20	-1110	11
21.5	18	22	21	18	-1010	10
19.5	16	20	19	16	-0910	9
17.5	14	18	17	14	-0810	8
15.5	12	16	15	12	-0710	7
13.5	10	14	13	10	-0610	6
11.5	8	12	11	8	-0510	5
9.5	6	10	9	6	-0410	4
7.5	4	8	7	4	-0310	3
5.5	2	6	5	2	53025-0210	2

REVISED
EC NO: JTR2011-0119 2011/08/18
DRWN:SHSHIBATA 2011/08/18
CH'KD:HKOMATSU 2011/08/31
APPR:MAYAMAMOTO
DESCRIPTION
REV

GENERAL TOLERANCES (UNLESS SPECIFIED)

10 UNDER	±0.20
10 OVER 30 UNDER	±0.25
30 OVER	±0.30
ANGULAR ±3 °	

DRAFT WHERE APPLICABLE MUST REMAIN WITHIN DIMENSIONS

DIMENSION STYLE: MM ONLY
SCALE: 5:1
DESIGN UNITS: METRIC
THIRD ANGLE PROJECTION

DRAWN BY: M.NAKAMURA DATE: 1994/08/19
CHECKED BY: H.HIRAMOTO DATE: 1994/08/20
APPROVED BY: M.FUKUSHIMA DATE: 1994/08/20

TITLE: 2.0 LOW PROFILE CONN WAFER ASSY (B/E TYPE)

molex MOLEX INCORPORATED

MATERIAL NO.: SEE CHART
DOCUMENT NO.: SD-53025-**10
SHEET NO.: 1 OF 1
SIZE: A3

THIS DRAWING CONTAINS INFORMATION THAT IS PROPRIETARY TO MOLEX INCORPORATED AND SHOULD NOT BE USED WITHOUT WRITTEN PERMISSION