CASE FINISH	CURRENT (AMPS)	WORKING VOLTAGE -55°C TO +85°C AC	WORKING VOLTAGE -55°C TO +85°C DC	WORKING VOLTAGE -55°C TO +125°C AC	WORKING VOLTAGE -55°C TO +125°C DC	MAXIMUM DC RESISTANCE (OHMS)	MAXIMUM VOLTAGE DROP DC	MAXIMUM VOLTAGE DROP AC	VARIABLE DIMENSIONS L	VARIABLE DIMENSIONS T	MINIMUM CAPACITANCE (uF)	MIN. INSERTION LOSS PER MIL-STD-220, FULL LOAD, -55°C TO +125°C 14 KHz	30 KHz	50 KHz	75 KHz	100 KHz	150 KHz	300 KHz	500 KHz	1 MHz	10 MHz	100 MHz	1 GHz	10 GHz
SOLDER	10	————	80	————	50	.01	---	---	.360	.190	1.4	--	15	--	--	--	28	33	--	44	60	--	70	--

PART MARKING:

9200-300-0025
SCI DATE CODE

PACKAGE MARKING:

STANDARD

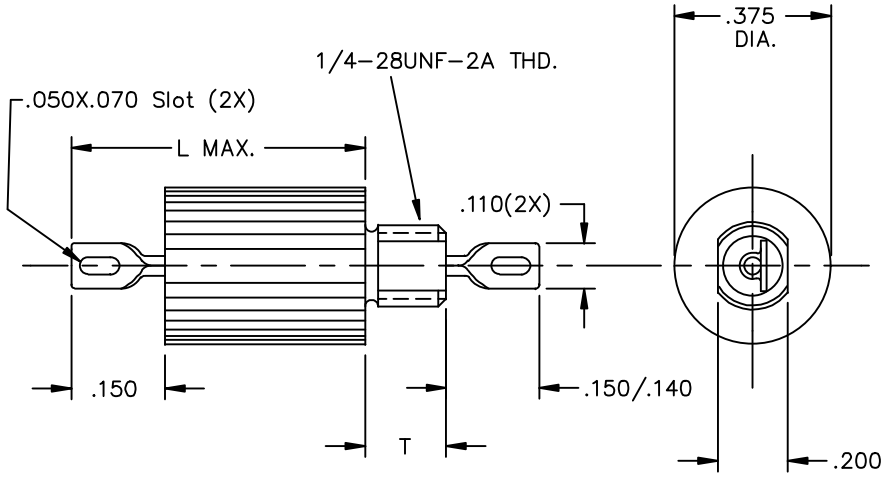

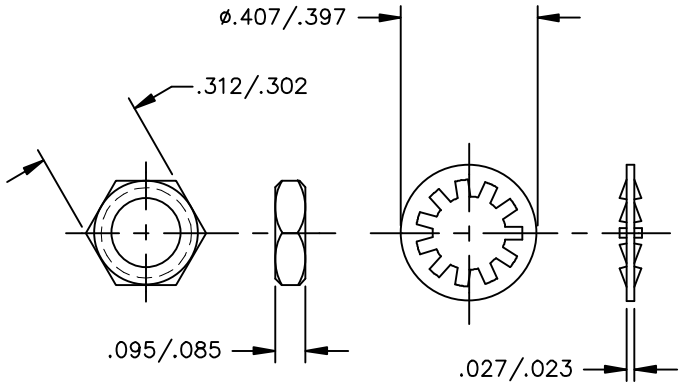

SCHEMATIC

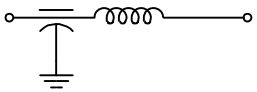

MTG. HARDWARE

MARKING NOTES:

N/A

NOTES:

1) MOUNTING TORQUE NOT TO EXCEED 7in-lbs.
2) MARKING: STANDARD 6pt. BLACK INK.

REV. NO.	CHANGE NOTICE
02	CN. 209351
01	CN. 167958 REDRAWN

UNLESS OTHERWISE SPECIFIED DIMENSIONS ARE IN INCHES.

DO NOT SCALE.

TOLERANCES UNLESS OTHERWISE SPECIFIED
Fractions ±
Dec. .xx±
Dec. .xxx± .010
Angles ±0° 30'

CODE IDENT. NO. OLSP2

SPECTRUM CONTROL INC.

ERIE, FAIRVIEW PENNSYLVANIA

Dwn. D.Humphreys
Ckd. 10/4/02
Apvd.
Sheet 1 of 1

Description Low Pass EMI Filter

9200-300-0025

Quality Products From The Specialists In Electro-Magnetic Compatibility