THIS DRAWING IS UNPUBLISHED. RELEASED FOR PUBLICATION -,- .
© COPYRIGHT - By - ALL RIGHTS RESERVED.

LOC	DIST
AJ	00

REVISIONS

P	LTR	DESCRIPTION	DATE	DWN	APVD
	G3	REVISED PER ECO-11-005030	11MAR11	RK	HMR

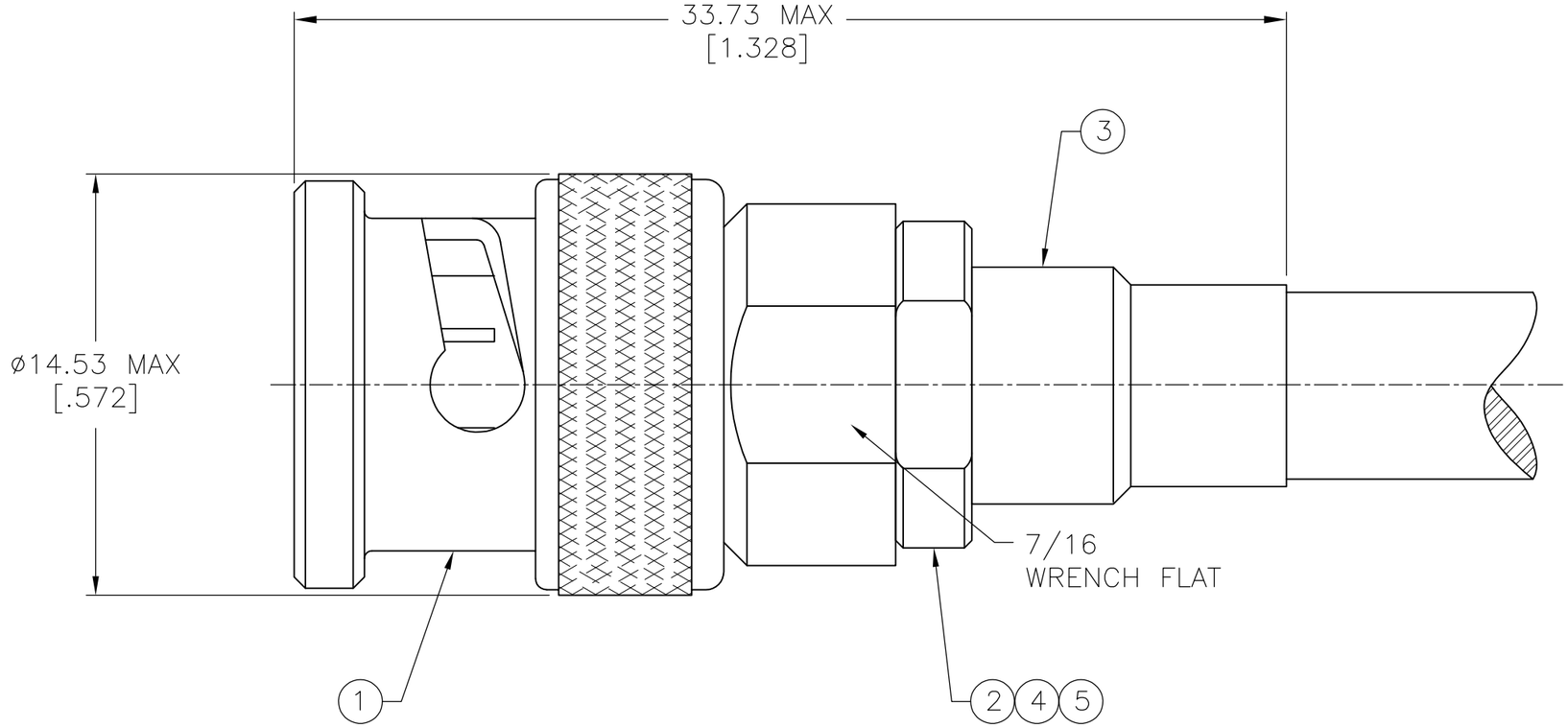

NOTES:

1. USE CRIMPING TOOL 69667.
2. SEE INSTRUCTION SHEET 408-2055.
3. PARTS PACKAGED SEPARATELY.
4. OBSOLETE PARTS: OBSOLETE CIS STREAMLINING PER D.RENAUD/D.SINISI

4 OBSOLETE	ROLM 49D2401 TWINAX	332214	332222-1	9-332224-0	1-332221-5	5-330949-0	332225-6
	RG 108/U & 108A/U	332214	332222-1	9-332224-0	1-332221-4	5-330949-0	332225-5
OBSOLETE	TROMPETER TWC-124-2	332214	332222	1-332224-0	1-332221-3	2-330949-2	332225-3
	RG 108/U & 108A/U	332214	332222	1-332224-0	332221	2-330949-2	332225
	FOR USE WITH CABLE	5 SEAL QTY=1	4 DIELECTRIC QTY=1	3 FERRULE QTY=1	2 CRIMP END QTY=1	1 PLUG ASSY QTY=1	PART #

THIS DRAWING IS A CONTROLLED DOCUMENT.

DIMENSIONS: mm

TOLERANCES UNLESS OTHERWISE SPECIFIED:
0 PLC ± -
1 PLC ± -
2 PLC ± -
3 PLC ± -
4 PLC ± -
ANGLES ± 1°

MATERIAL -

FINISH -

DWN G. VIERA 10JUL03
CHK J. HAVENER 10JUL03
APVD J. HAVENER 10JUL03
PRODUCT SPEC —
APPLICATION SPEC —
WEIGHT 0.50 OZ.

TE Connectivity

NAME PLUG, TWIN BNC

SIZE	CAGE CODE	DRAWING NO	RESTRICTED TO
A3	00779	C-332225	—

CUSTOMER DRAWING

SCALE	SHEET	REV
5:1	1 OF 1	G3