THIS DRAWING IS UNPUBLISHED. RELEASED FOR PUBLICATION -,- .
© COPYRIGHT - By - ALL RIGHTS RESERVED.

LOC	DIST
GP	00

REVISIONS

P	LTR	DESCRIPTION	DATE	DWN	APVD
	B1	REVISED PER ECO-11-004835	11MAR11	RK	HMR

1. HOUSING: PBT, UL94V-0, COLOR: SEE TABLE.
   POSTS: PHOSPHOR BRONZE.
2. POSTS: 0.00076[.000030] MIN GOLD ON MATING AREA, 0.00254[.000100] MIN TIN ON SOLDER END, ALL OVER 0.00127[.000050] MIN NICKEL ON ENTIRE POST.
3. DATUMS S & T TO BE ESTABLISHED BY CUSTOMER.
4. NO KEYING SLOT ON THIS END FOR 6, 8, 10, 12 & 14 POSITION ASSEMBLIES.
5. NO KEYING SLOT ON THIS END FOR 6, 8 & 10 POSITION ASSEMBLIES.

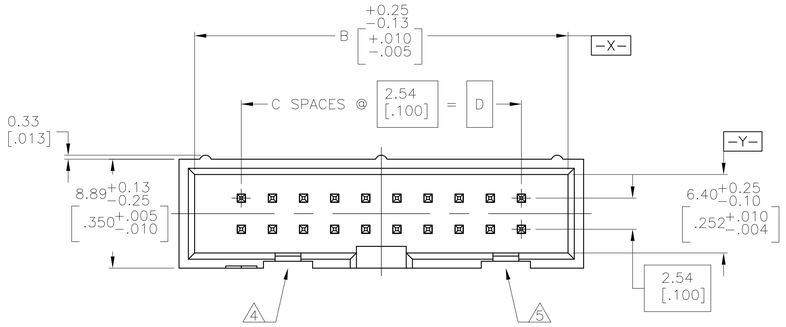

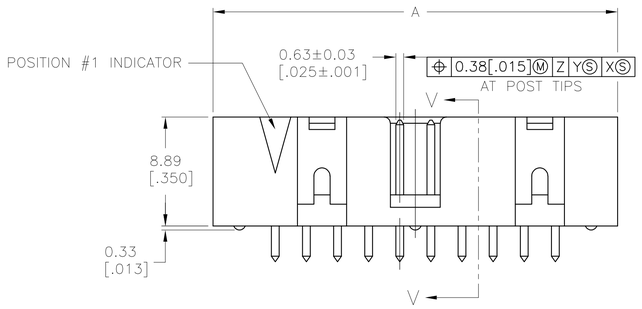

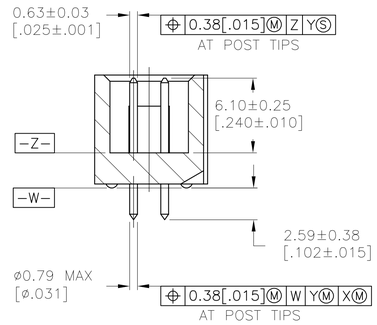

SECTION V–V

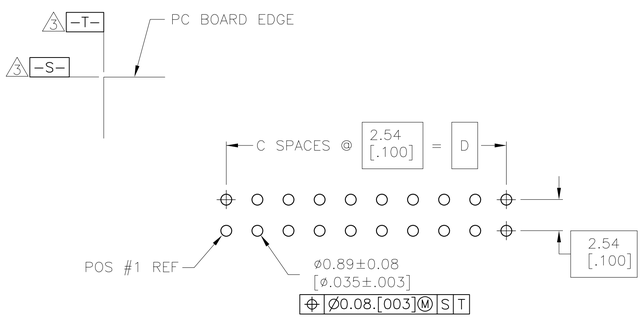

RECOMMENDED PC BOARD LAYOUT
(VIEWED FROM CONNECTOR SIDE)

	BLUE	78.74 [3.100]	31	86.36 [3.400]	88.90 [3.500]	64	3-1761603-7
OBSOLETE	BLUE	73.66 [2.900]	29	81.28 [3.200]	83.82 [3.300]	60	3-1761603-6
	BLUE	60.96 [2.400]	24	68.58 [2.700]	71.12 [2.800]	50	3-1761603-5
	BLUE	53.34 [2.100]	21	60.96 [2.400]	63.50 [2.500]	44	3-1761603-4
	BLUE	48.26 [1.900]	19	55.88 [2.200]	58.42 [2.300]	40	3-1761603-3
	BLUE	43.18 [1.700]	17	50.80 [2.000]	53.34 [2.100]	36	3-1761603-2
	BLUE	40.64 [1.600]	16	48.26 [1.900]	50.80 [2.000]	34	3-1761603-1
	BLUE	35.56 [1.400]	14	43.18 [1.700]	45.72 [1.800]	30	3-1761603-0
	BLUE	30.48 [1.200]	12	38.10 [1.500]	40.64 [1.600]	26	2-1761603-9
	BLUE	27.94 [1.100]	11	35.56 [1.400]	38.10 [1.500]	24	2-1761603-8
	BLUE	22.86 [.900]	9	30.48 [1.200]	33.02 [1.300]	20	2-1761603-7
	BLUE	17.78 [.700]	7	25.40 [1.000]	27.94 [1.100]	16	2-1761603-6
	BLUE	15.24 [.600]	6	22.86 [.900]	25.40 [1.000]	14	2-1761603-5
	BLUE	12.70 [.500]	5	20.32 [.800]	22.86 [.900]	12	2-1761603-4
	BLUE	10.16 [.400]	4	17.78 [.700]	20.32 [.800]	10	2-1761603-3
OBSOLETE	BLUE	7.62 [.300]	3	15.24 [.600]	17.78 [.700]	8	2-1761603-2
	BLUE	5.08 [.200]	2	12.70 [.500]	15.24 [.600]	6	2-1761603-1
OBSOLETE	BLACK	73.66 [2.900]	29	81.28 [3.200]	83.82 [3.300]	60	1-1761603-6
OBSOLETE	BLACK	60.96 [2.400]	24	68.58 [2.700]	71.12 [2.800]	50	1-1761603-5
OBSOLETE	BLACK	48.26 [1.900]	19	55.88 [2.200]	58.42 [2.300]	40	1-1761603-3
OBSOLETE	BLACK	40.64 [1.600]	16	48.26 [1.900]	50.80 [2.000]	34	1-1761603-1
OBSOLETE	BLACK	35.56 [1.400]	14	43.18 [1.700]	45.72 [1.800]	30	1-1761603-0
OBSOLETE	BLACK	30.48 [1.200]	12	38.10 [1.500]	40.64 [1.600]	26	1761603-9
OBSOLETE	BLACK	22.86 [.900]	9	30.48 [1.200]	33.02 [1.300]	20	1761603-7
OBSOLETE	BLACK	17.78 [.700]	7	25.40 [1.000]	27.94 [1.100]	16	1761603-6
OBSOLETE	BLACK	15.24 [.600]	6	22.86 [.900]	25.40 [1.000]	14	1761603-5
OBSOLETE	BLACK	10.16 [.400]	4	17.78 [.700]	20.32 [.800]	10	1761603-3
OBSOLETE	PART NUMBER	D	C	B	A	NO OF POS	PART NUMBER

THIS DRAWING IS A CONTROLLED DOCUMENT.

DIMENSIONS: mm

TOLERANCES UNLESS OTHERWISE SPECIFIED:
0 PLC ± –
1 PLC ± –
2 PLC ± –
3 PLC ± 0.13[.005]
4 PLC ± –
ANGLES ± –

MATERIAL 1 FINISH 2

DWN B.CRISAMORE/DTI 30JUN05
CHK S.BOLASH 30JUN05
APVD M.WALMSLEY 30JUN05
PRODUCT SPEC –
APPLICATION SPEC –
WEIGHT –

TE Connectivity

NAME HEADER ASSEMBLY, VERTICAL, LOW PROFILE, IDC
–

SIZE A1 | CAGE CODE 00779 | DRAWING NO C-1761603 | RESTRICTED TO –

CUSTOMER DRAWING | SCALE 4:1 | SHEET 1 OF 1 | REV B1

4805 (3/11)