Feb.1.2018 Copyright 2018 HIROSE ELECTRIC CO., LTD. All Rights Reserved.

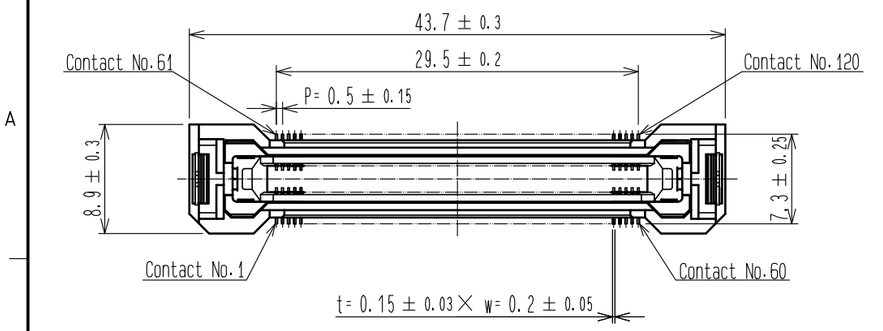

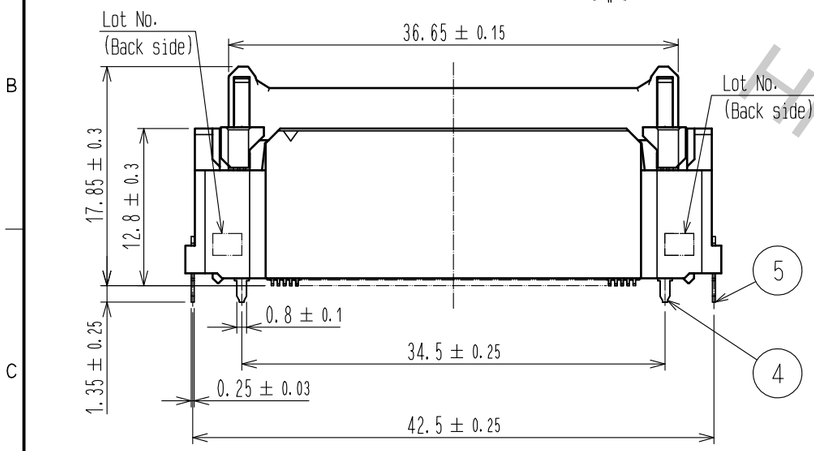

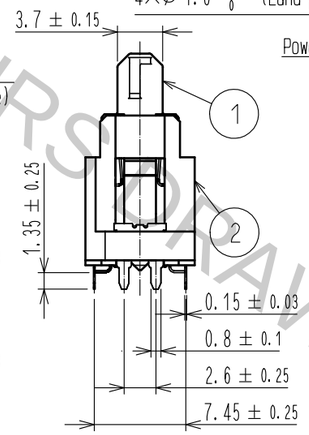

RECOMMENDED LAND PATTERN DIMENSION OF PCB

1 (PCB THICKNESS: t=1.6mm)

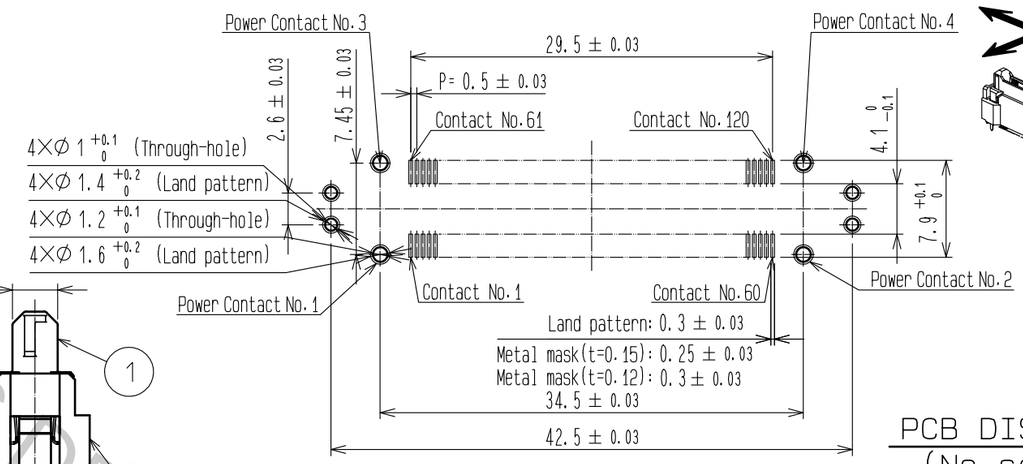

3 FLOATING RANGE

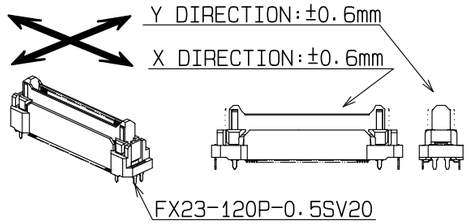

PCB DISTANCE

(No scale)

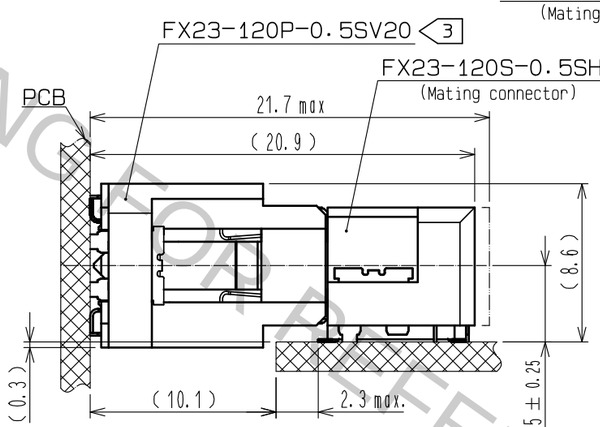

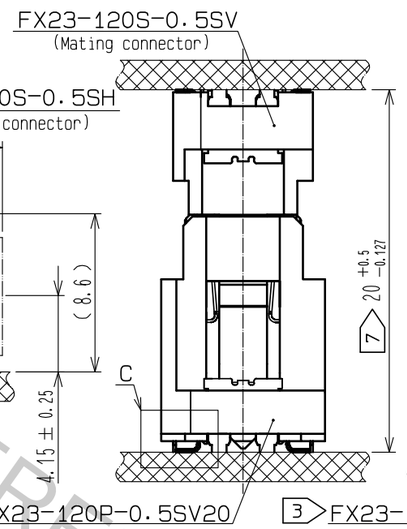

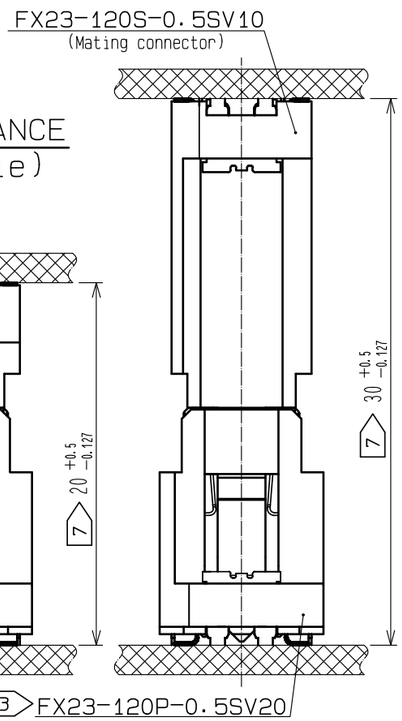

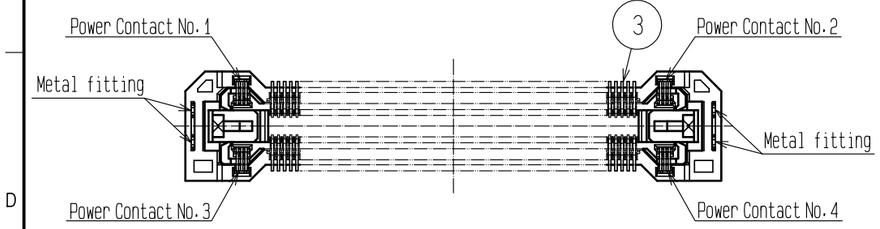

C (10 : 1)

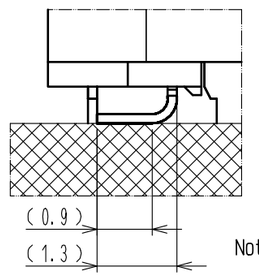

2 DRAWING FOR PACKING (No scale)

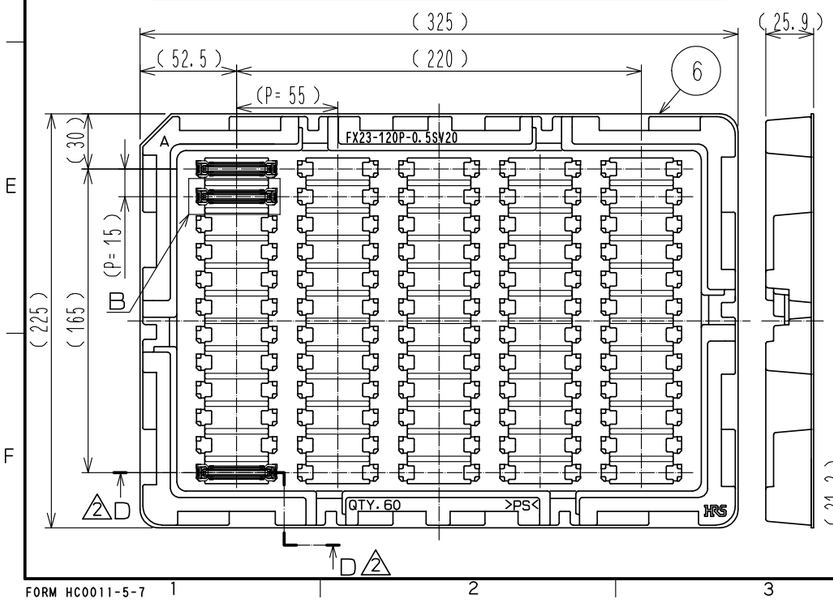

4 7 B (1 : 1)

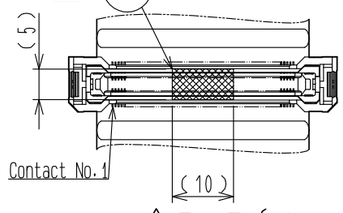

2 D−D (1 : 1)

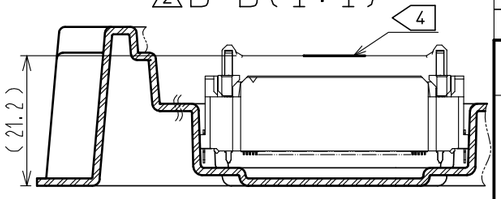

Note

1 Lead CO-Planarity is 0.1mm MAX.
2 This is packaged in tray. (60pcs/tray)
3 Floating range of this connector is ±0.6mm MAX.
2 The maximum cycle time of the floating operation is in accordance with the mating cycle of the connector.
4 It shows the vacuum pickup area. Remove the mylar tape before mating connectors.
5 Blemish and hit mark can be occured through out the manufacturing process which doesn't affect quality level.
6 The dimensions in parentheses are for references.
7 Please use the connectors within the specified PCB distance.

NO.	MATERIAL	FINISH , REMARKS
3	COPPER ALLOY	CONTACT AREA: GOLD 0.1μm LEAD AREA: GOLD 0.03μm UNDER PLATING: NICKEL 1.3μm
2	POLYAMIDE	BLACK UL94V-0
1	POLYAMIDE	BLACK UL94V-0

NO.	MATERIAL	FINISH , REMARKS
7	POLYIMIDE	(TAPE FOR VACUUM PICKUP)
6	POLYSTYRENE	(TRAY)
5	BRASS	LEAD AREA: TIN-PLATING 3μm UNDER PLATING: NICKEL 1μm
4	COPPER ALLOY	CONTACT AREA: GOLD 0.1μm LEAD AREA: TIN-PLATING 1μm UNDER PLATING: NICKEL 1.3μm

UNITS	SCALE	COUNT	DESCRIPTION OF REVISIONS	DESIGNED	CHECKED	DATE
mm	2 : 1	2 4	DIS-F-00001099	TS. OONO	KN. SHIBUYA	16. 02. 17

HRS HIROSE ELECTRIC CO., LTD.

APPROVED	: HS. OKAWA	14. 07. 25	DRAWING NO.	EDC-353549-00-00
CHECKED	: KN. SHIBUYA	14. 07. 25	PART NO.	FX23-120P-0.5SV20
DESIGNED	: TS. OONO	14. 07. 25	CODE NO.	CL573-3106-9-00
DRAWN	: TS. OONO	14. 07. 25		2 1/1

HRS DRAWING FOR REFERENCE ONLY