THIS DRAWING IS UNPUBLISHED. RELEASED FOR PUBLICATION -,- .
© COPYRIGHT - BY TYCO ELECTRONICS CORPORATION. ALL RIGHTS RESERVED.

LOC	DIST
AJ	16

REVISIONS

P	LTR	DESCRIPTION	DATE	DWN	APVD
	A	REVISED PER 0S14-0150-05	06OCT2005	REH	JGH

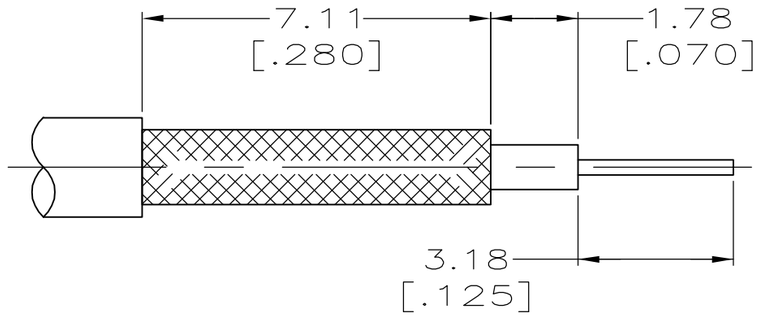

RECOMMENDED STRIP LENGTHS

1. PARTS PACKAGED UNASSEMBLED.
2. CONTACT CRIMP: CRIMP TOOL MIL-C-22520/5-01 WITH DANIELS POSITIONER K727; SET ON POSITION #2.
3. BRAID CRIMP: AMP HAND TOOL PART NUMBER 220190-1 WITH DIE SET PART NUMBER 58046-1, OR HAND TOOL MIL-C-22520/5-01 WITH DANIELS DIE SET NUMBER Y144.
4. BRAID CRIMP: AMP HAND TOOL PART NUMBER 220190-1 WITH DIE SET PART NUMBER 59969-2, OR HAND TOOL MIL-C-25520/5-01 WITH DANIELS DIE SET NUMBER Y196.

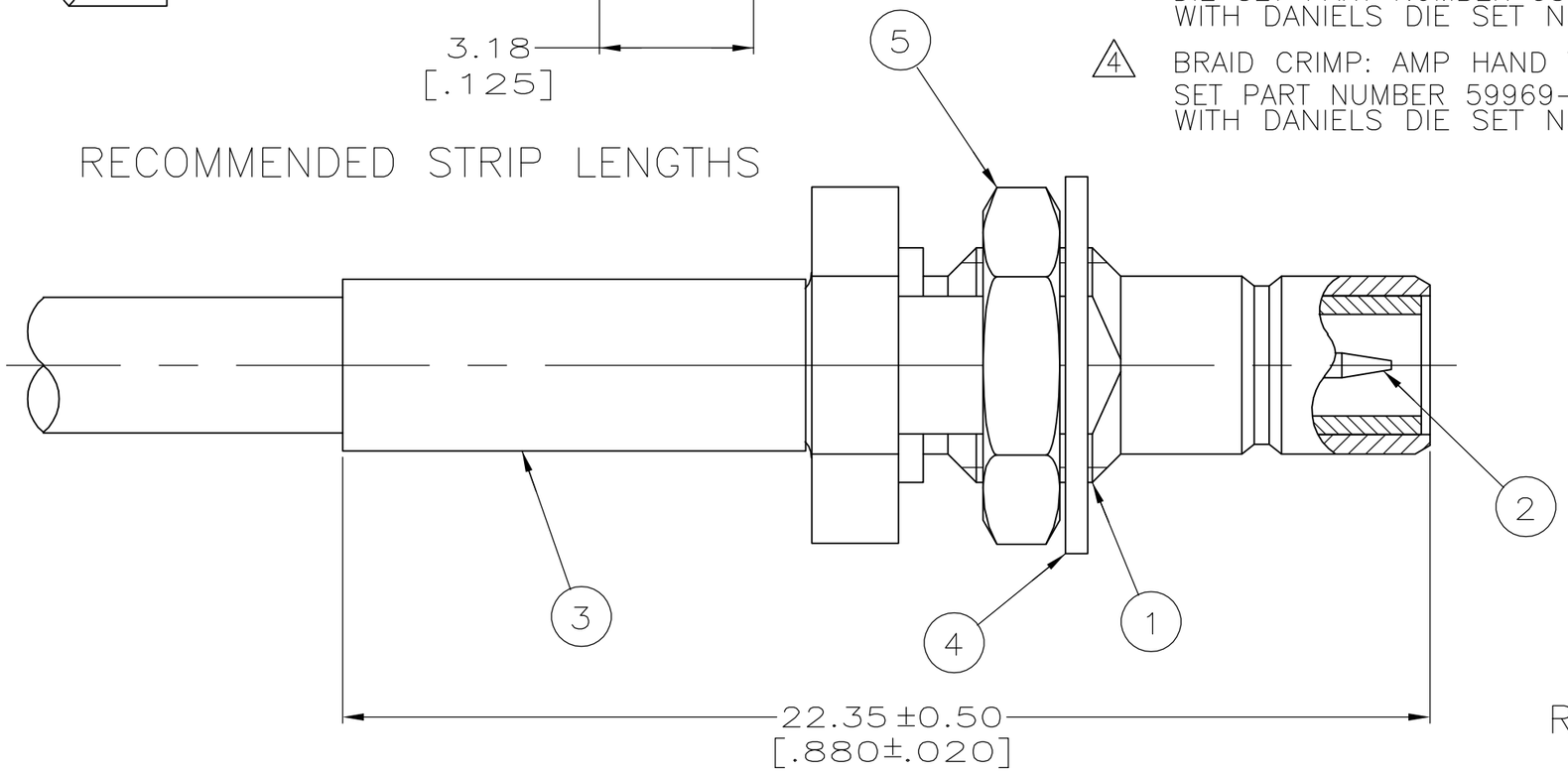

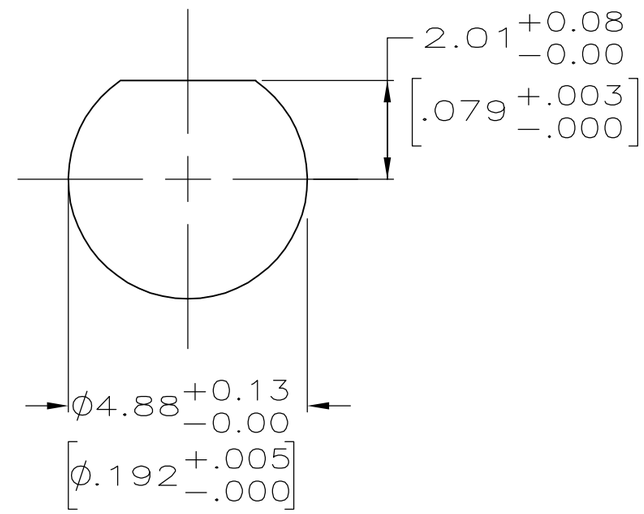

RECOMMENDED PANEL CUT-OUT

RD-316	2 4	414969-2	415001-2	1-413889-4	228225-2	9-415007-0	5415006-2
RG-188/U & -316/U	2 3	414969-2	415001-2	1-413889-3	228225-2	9-415007-0	5415006-1
CABLE	CRIMP TOOLING	5 JAM NUT QTY=1	4 LOCKWASHER QTY=1	3 FERRULE QTY=1	2 CONTACT QTY=1	1 JACK ASSY QTY=1	PART NUMBER

THIS DRAWING IS A CONTROLLED DOCUMENT.

DIMENSIONS: mm [INCHES]

TOLERANCES UNLESS OTHERWISE SPECIFIED:

0 PLC	± –
1 PLC	± –
2 PLC	± 0.25 [.010]
3 PLC	± –
4 PLC	± –
ANGLES	± –

MATERIAL –

FINISH –

DWN	J. HAVENER	31MAR2005
CHK	J. HAVENER	31MAR2005
APVD	J. HAVENER	31MAR2005
PRODUCT SPEC	—	
APPLICATION SPEC	—	
WEIGHT	—	

tyco Electronics

Tyco Electronics Corporation
Harrisburg, PA 17105-3608

NAME
BULKHEAD JACK, SMB
–
–

SIZE	CAGE CODE	DRAWING NO	RESTRICTED TO
A3	00779	C-5415006	—

CUSTOMER DRAWING

SCALE	SHEET	REV
8:1	1 OF 1	A