Tous droits strictement reserves. Reproduction ou communication a des tiers interdite sous quelque forme que ce soit sans autorisation ecrite du propietaire. Propriete de c FCI. Droits de reproduction FCI.

All rights strictly reserved. Reproduction or issue to third parties in any form whatever is not permitted without written authority from the proprietor. Property of FCI. Copyright FCI.

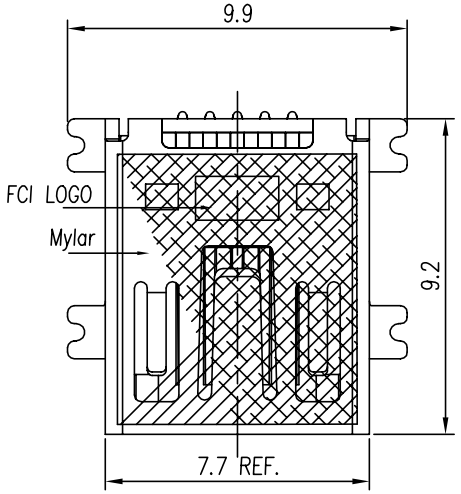

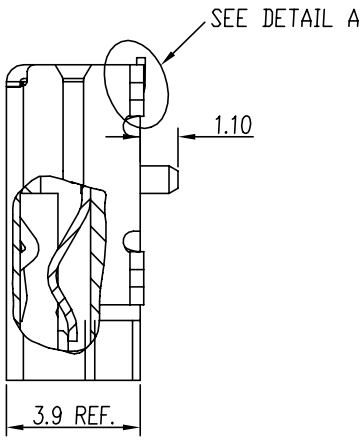

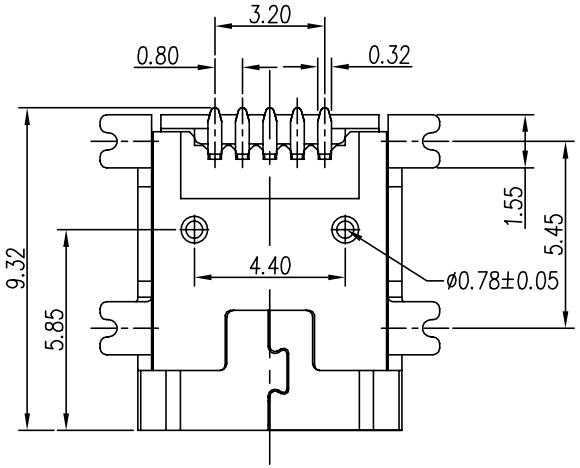

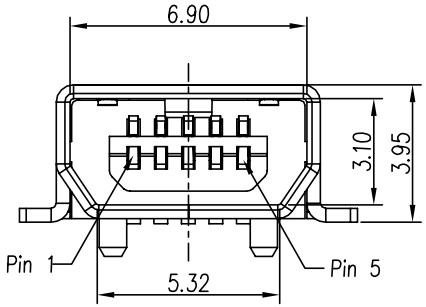

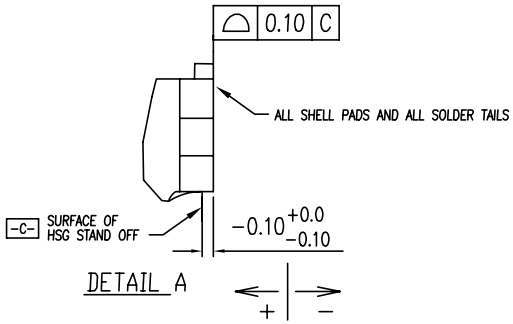

mat'l. code				tolerances unless otherwise specified				CUSTOMER COPY	FCI www.fciconnect.com
ltr	ecn no	dr	date			.X ± 0.30			
F	T06-0074	A.C	04/10/2006	linear		.XX ± 0.20		projection	title MINI USB AB TYPE RECEPTACLE CONNECTOR, R/A SMT TYPE
G	T06-0201	A.C	12/14/2006			.XXX ± 0.10			
H	T09-1090	J.H	06/22/2009	angles		0° ±3°			
J	T10-0095	J.H	12/27/2010	dr	JASMINE CHAING	9/09/03		MM	product family 511 / code NT
K	T-004677	J.H	07/27/2011	engr	ALLEN CHANG	6/16/08			size A4 / dwg no 10033527
L	ELX-N-007323	A.ZH	10/25/2011	chr	ROGER LIN	6/16/08		scale N/A	sheet 1 of 2
				appd	JAMES HSU	6/16/08			
sheet index	revision	L							cage code
	sheet	1~2							

ACAD

PROD NO
SEE NOTES

NOTES:

1.MATERIAL:
HOUSING: HIGH TEMP THERMOPLASTIC, GLASS FIBER FILLED.
UL 94V-0 RATED, COLOR IN BLACK.
CONTACT: COPPER ALLOY.
SHELL: COPPER ALLOY.

2.FINISH:
CONTACT: UNDERPLATED 50u" MIN. NICKEL OVER ALL
100u" MIN. MATTE TIN PLATED IN SOLDERING AREA FOR LEAD FREE VERSION.
SELECTIVE GOLD PLATED IN CONTACT AREA.
SHIELD: N: NICKEL 40u"~120u" PLATED OVERALL.
T: SELECTIVE 60u" MIN. MATTE TIN ON LEGS OVER 40u"~120u" NICKEL.

3. 10033527-X3212XLF: THE HOUSING WILL WITHSTAND EXPOSURE TO 260°
PEAK TEMPERATURE FOR 10 SECONDS IN A IR REFLOW APPLICATION.
AND THIS PRODCUT MEETS EUROPEAN UNION DIRECTIVES AND OTHER
COUNTRY REGULATIONS AS DESCRIBED IN GS-22-008.

4. PRODUCT SPEC: GS-12-174; PACKAGE SPEC: GS-14-873

5. PART NUMBER 10033527N3112LF TO BE EQUAL TO 10033527-T3112LF WITH Ni+Sn PLATING.
PART NUMBER 10033527N3212LF TO BE EQUAL TO 10033527-T3212LF WITH Ni+Sn PLATING.

6. PRODUCT ORDERING DATA :

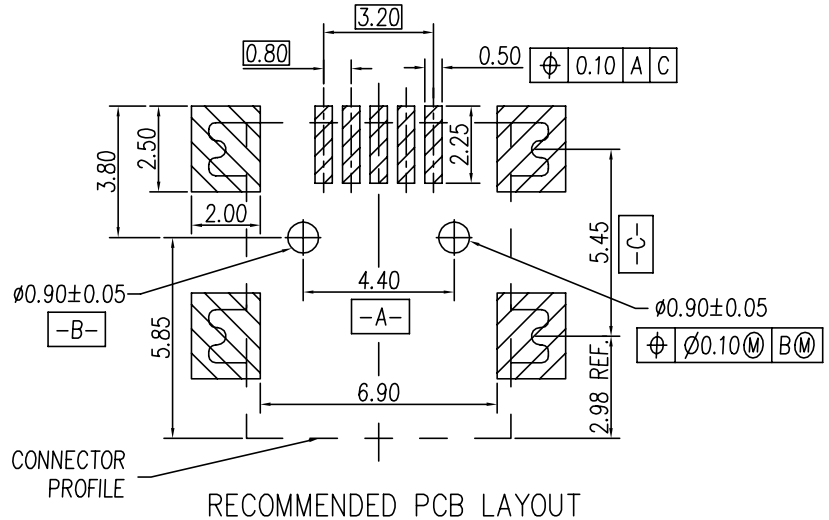

RECOMMENDED PCB LAYOUT
COMPONENT SIDE

10033527 - X X X X X M LF

- LF: LEAD FREE PLATING
- M: WITH MYLAR
  BLANK: WITHOUT MYLAR
- PACKAGING METHOD:
  2: TAPE & REEL PACKAGING.
- POST OPTION:
  1 : WITH PLASTIC POST.
- HSG MATERIAL:
  1 OR 2: HIGH TEMP THERMOPLASTIC.
- PLATING IN CONTACT AREA:
  3 : 30u" Au.
- N: NICKEL FOR SHIELD.
  T: SELECTIVE TIN ON LEGS.
- SEE NOTE 5 FOR THE SPECIFIC P/N ASSIGNMENT FOR SPECIFIC CUSTOMER

mat'l. code				tolerances unless otherwise specified			CUSTOMER COPY	FCI www.fciconnect.com	
ltr	ecn no	dr	date	linear	.X ± 0.30		projection	title MINI USB AB TYPE RECEPTACLE CONNECTOR, R/A SMT TYPE	
L					.XX ± 0.20				
					.XXX ± 0.10				
				angles	0° ±3°				
				dr	JASMINE CHAING	9/09/03	MM	product family 511	code NT
				engr	ALLEN CHANG	6/16/08		size A4 dwg no 10033527	
				chr	ROGER LIN	6/16/08	scale N/A		sheet 2 of 2
				appd	JAMES HSU	6/16/08			
sheet index	revision sheet								

cage code

Tous droits strictement reserves. Reproduction ou communication a des tiers interdite sous quelque forme que ce soit sans autorisation ecrite du propietaire. Propriete de c FCI. Droits de reproduction FCI.

All rights strictly reserved. Reproduction or issue to third parties in any form whatever is not permitted without written authority from the proprietor. Property of FCI. Copyright FCI.