REV.	RELEASE NO.	DATE	DRAWN	APP.
1	00-2147	09/11/00	GJR	
2	00-2183	09/29/00	GJR	
3	01-2417	05/21/01	GJR	
4	01-2539	07/19/01	GJR	
5	04-4057	5/18/04	GJR	
6	04-4103	6/22/04	GJR	
7	04-4436	12/28/04	GJR	
8	05-4483	2/9/05	GJR	
9	05-4621	5/3/05	GJR	
10	06-5083	3/20/06	GJR	
11	07-5466	11/30/07	KMS	

CABLE/CONNECTOR S/A PART NUMBER	(1) 3 CONDUCTOR CABLE BULK	FINAL LENGTH ±3.0% "A"	CABLE LENGTH ±1.5% "B" BEFORE ASSEMBLY
P-2431.3	14224.1	6.0 IN 152.4 mm	6.75 IN 171.5 mm
P-2432.3	14224.1	12.0 IN 304.8 mm	12.75 IN 323.8 mm
4 P-2433.3	14224.1	18.0 IN 457.2 mm	18.75 IN 476.2 mm
P-2434.3	14224.1	24.0 IN 609.6 mm	24.75 IN 628.6 mm
P-2435.3	14224.1	36.0 IN 914.4 mm	36.75 IN 933.5 mm
5 14300.3	14224.1	8.0 IN 203.2 mm	8.75 IN 222.2 mm
6 14306.3	14224.1	72.0 IN 1828.8 mm	72.75 IN 1847.8 mm
7 14376.3	14224.1	80.0 IN 2032.0 mm	80.75 IN 2051.0 mm
8 14378.3	14224.1	9.0 IN 228.6 mm	9.75 IN 247.7 mm
9 14399.3	14224.1	48.0 IN 1219.2 mm	48.75 IN 1238.2 mm
10 14482.3	14224.1	120.0 IN 3048.0 mm	120.75 IN 3067.0 mm
11 14551.3	14224.1	180.0 IN 4572.0 mm	180.75 IN 4591.0 mm

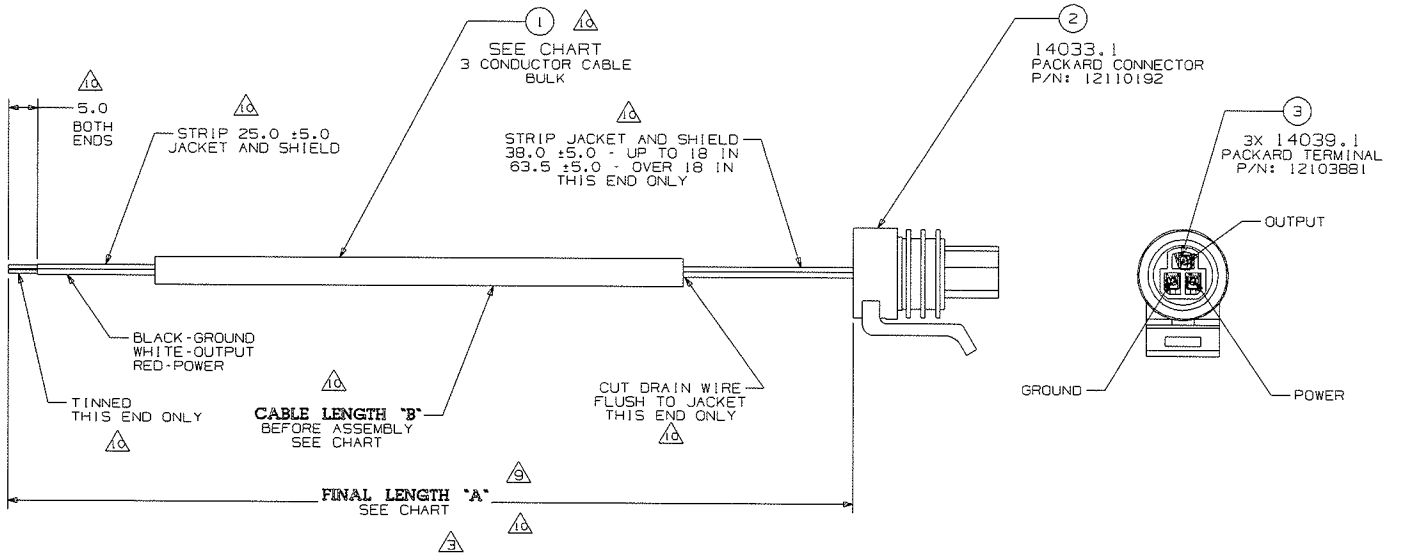

MILLIMETERS		
TOLERANCE	.0	.00
DIA. ±	.2	.13
LINEAR ±	.2	.13
ANGULAR ±	1°	
DO NOT SCALE PRINT		

THIS DRAWING REPRESENTS CONFIDENTIAL AND PROPRIETARY INFORMATION OF SSI TECHNOLOGIES INC AND SHALL NOT BE USED, ALTERED OR DISCLOSED IN WHOLE OR IN PART WITHOUT THE EXPRESS WRITTEN APPROVAL OF SSI TECHNOLOGIES INC. ANY USE OF THIS DRAWING SHALL BE SUBJECT TO SSI TECHNOLOGIES INC SUPPLIER QUALITY ASSURANCE SPECIFICATION SQA9001.

SSI Technologies, Inc.

JOB: PRESSURE SENSOR		DO NOT SCALE	ASSEMBLY NO. - - - - -
NAME: CABLE/CONNECTOR S/A		3RD ANGLE PROJECTION	CUSTOMER I.D.
MATERIAL: N/A		REFER TO ANSI Y14.5M-1994	DRWG. NO. P-2418.3
DWG SIZE: C	SHEET: 1 OF 1	SCALE: N/A	VERSION: NX
COMPUTER DRAWN NO MANUAL CHANGE			REV. 11

A B C D E F G H J K L M
N P Q R S T U V W X Y Z