Alle Rechte vorbehalten/ *All rights reserved*

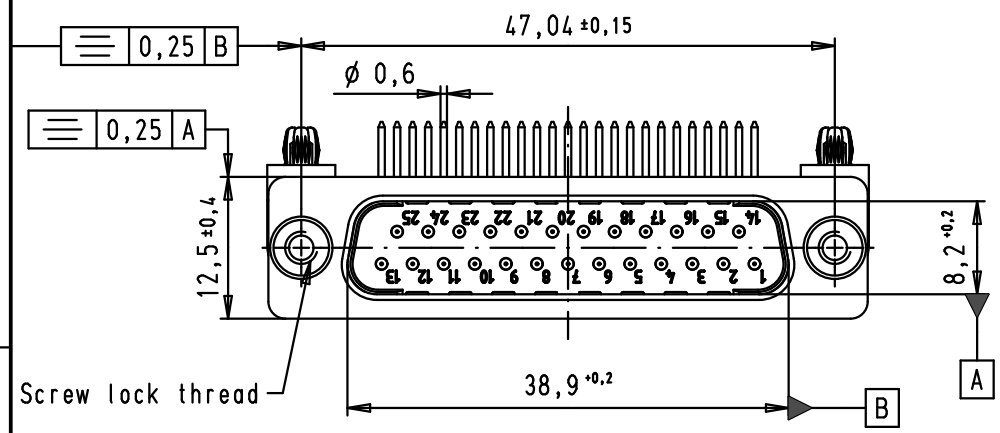

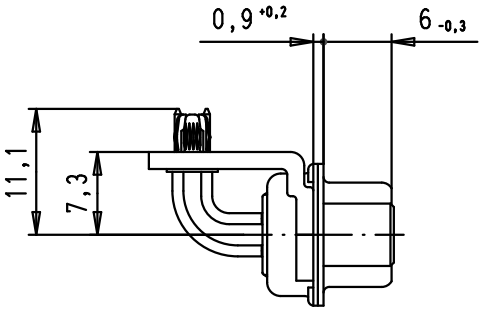

SPECIFICATIONS

Mating cycles	500
Filter type	C
Capacitance	1000 pF±20%
Working voltage	100 V
Current rating	7,5 A
Insulation resistance	>1 GΩ

FREQUENCY (MHz)	ATTENUATION (dB)
5	1
10	3
50	12
100	20
500	34
1000	30

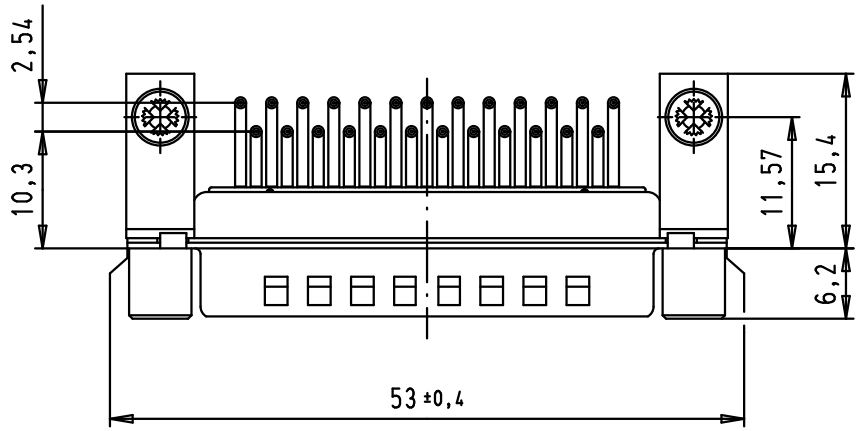

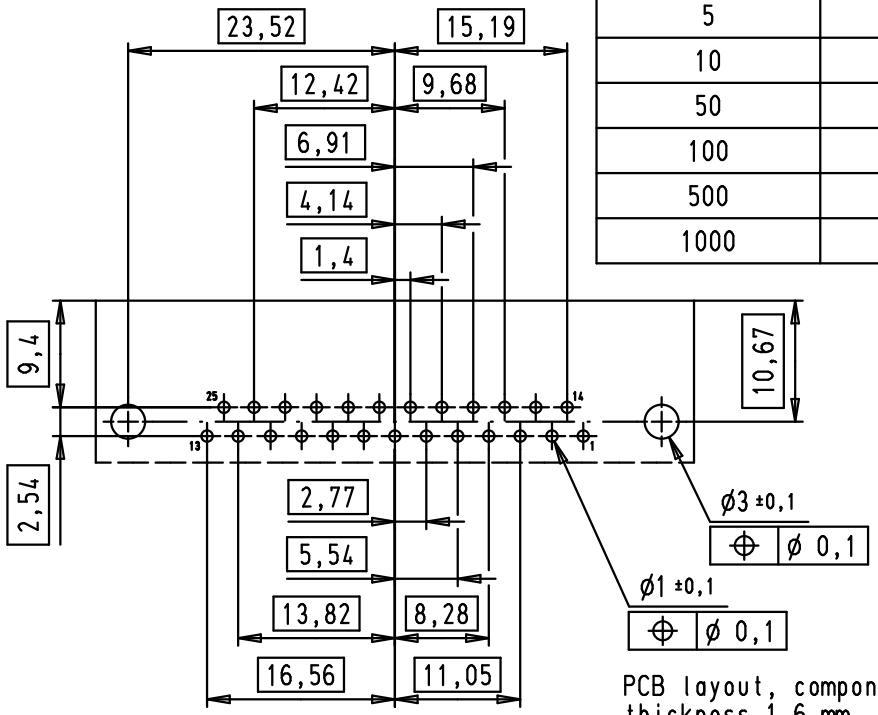

PCB layout, component side, thickness 1,6 mm

09 64 324 7235	M3
09 64 324 7234	4-40 UNC-2B
Part number	Screw lock thread

Mod.	Dat.	Name
EC01003	25/11/09	PK
33790	01/08/06	PK
32111	03/06/04	AF
31058	08/07/02	CV

	Dat.	Name
Detail.	08/07/02	CV
Insp.		
Stand.		

All Dim. in mm
Orig. Size DIN A 4

HARTING EURL
F-95972 Paris

D-Sub, male, angled, 25 poles, turned solder pins, screw locks and brackets with board locks

Maßstab/ *Scale* 1,5:1

TB 09 64 324 723X

Sub.

Blatt/ *Page* 2/4